Düker

DRAINAGE TECHNOLOGY



MLK-protec Specifier's Manual

Düker cast iron drainage pipe system for aggressive domestic waste waters in building drainage

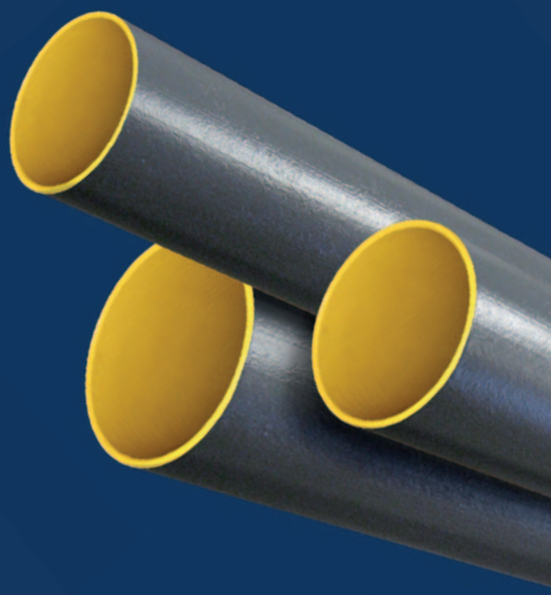

MLK-protec cast iron drainage pipe system

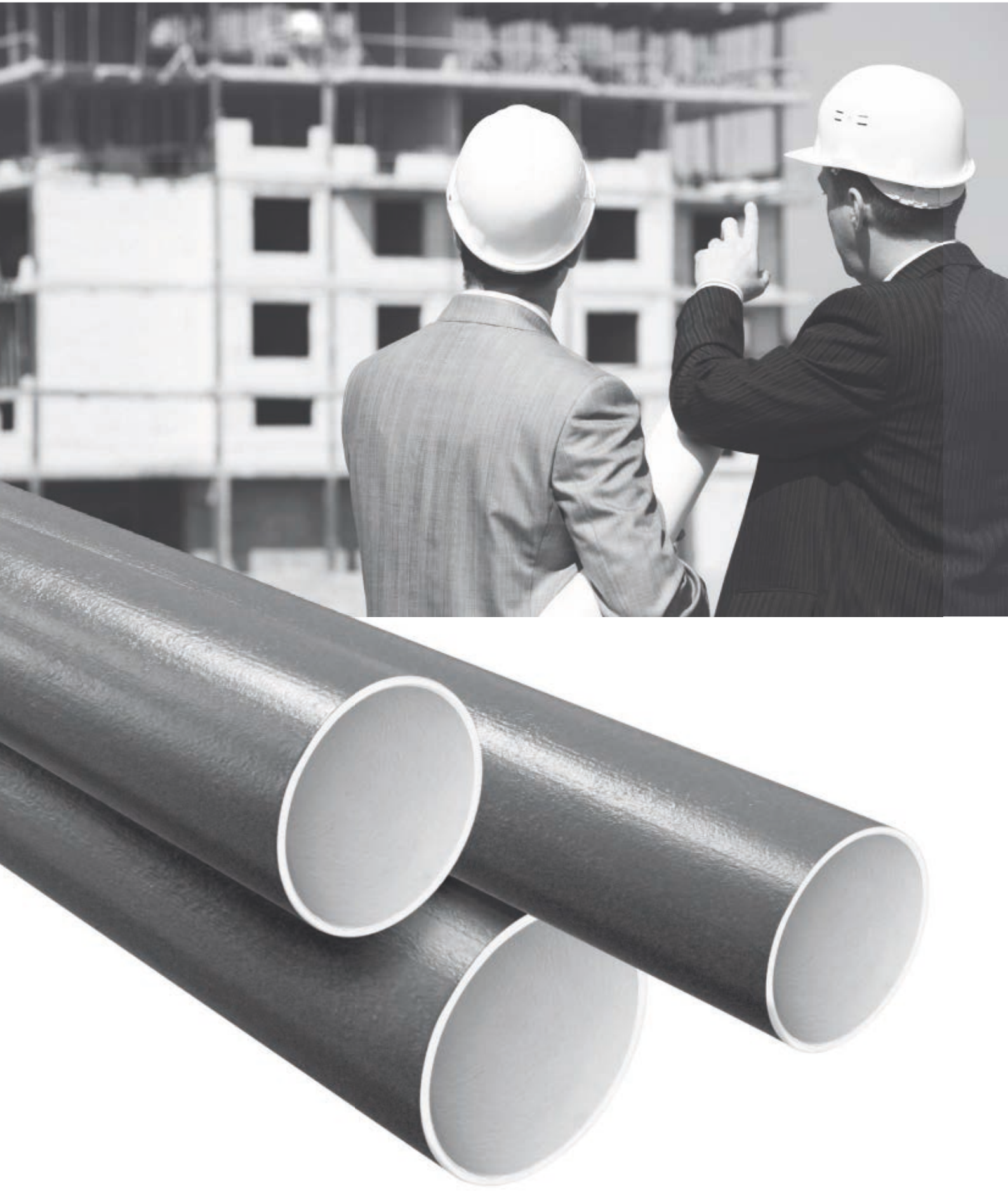

TABLE OF CONTENTS

General information

	page
MLK-protec coatings	4
Application, planning and installation	4
Approvals	5

01 Resistance chart

Resistance chart	6-7

02 MLK-protec range of products

MLK-protec pipes	9
Düker pro-cut tape	9
MLK-protec reducers	10
MLK-protec down pipe supports	10
MLK-protec bends	11 - 13
MLK-protec S-bends	13
MLK-protec branches	14 - 15
MLK-protec inspection pipes	16
MLK-protec plugs	16
MLK-protec siphons	17
MLK-protec pipes/adapters with wall flange	17
MLK-protec connecting bends	18
MLK-protec connection pieces	19

03 Couplings programme

Dükorapid® coupling	20
Rapid Inox coupling	20
Rapid MSM coupling	21
Connect-G Inox coupling	21
Connect-F Inox coupling	22
Kombi grip collar/Grip Collar	22 - 23
Fire protection coupling BSV 90	23
Düker EK Fix coupling	24
Konfix Multi coupling	24
Multiquick coupling	25
Transition coupling	25

04 Installation instructions

	page
Installation instructions pro-cut tape	26 - 27

05 Laying instructions

Grease drain lines	28 - 29
Underground installation	31 - 33

Fixings, fire and noise protection

For specifications and recommendations on these and other topics, please refer to the latest version or the SML Specifier's Manual.

06 Specifying texts

Specifying texts	34 - 37

APPLICATION, CHARACTERISTICS

MLK-protec cast iron drainage pipe system

The manufacture of cast iron drainage pipes, fittings and corresponding couplings is based primarily on the European standard EN 877. MLK-protec was developed particularly for the drainage of waste waters of a certain aggressiveness in domestic areas. It bears a special coating inside as well as an outside coating that is suitable for underground installation. The advantages known from the standard version SML - stability, installation friendliness, noise an fire protection - remain unchanged.

The protec coating

The material of MLK-protec pipes and fittings is identical to that of the standard SML pipes:

- grey cast iron with flake graphite type at least EN-GJL-150 as per EN 1561

The inside surfaces are machined extensively before coating in order to avoid undercuts and air inclusions caused by them. The pipe edges are chamfered twice. The inside coating of MLK-protec pipes is composed as follows:

- two separately burnt-in layers of two-component wet epoxy, thickness 120 µm each (total thickness 240 µm). Separate coating of the pipe edge.

The epoxy material is a new development with optimised adherence and cross-linking, very good flow characteristics and excellent chemical resistance.

The outside coating of MLK-protec pipes follows EN 877 for underground installation:

- thermal spray zinc coating of min. 130 g/m²
- compatible cover coat, grey colour

MLK-protec fittings bear a high-quality epoxy powder coating in grey colour inside and out.

Areas of application

MLK-protec is suitable for drainage pipes charged with waste water whose aggressiveness surpasses the normal domestic use, e.g. in professional kitchens and canteens.

For the following applications, we recommend to consult us:

- food and beverage industries
- meat processing and butcheries
- thermal and medical spas
- hospitals and care facilities
- school, hospital or photo laboratories

Planning and installation

Planning and installation of MLK-protec pipelines follow the technical regulations and stipulations of

- EN 12056 Gravity drainage systems inside buildings
- EN 752 Drain and sewer systems outside buildings
- EN 1610 Construction and testing of drains and sewers
- EN 1825-2 Grease separators. Selection of nominal size, installation, operation and maintenance

and other applicable European, national or local standards and regulations.

CE conformity

In 2008, the relevant product standard EN 877 for cast iron drainage pipe systems became a so-called harmonised standard. This means that it now contains an annex ZA with details about the product characteristics and testing required for CE marking.

The manufacturers are now required to apply the CE marking to their products as per EN 877 in order to confirm the product's suitability for the free trade inside the EU. The CE marking replaces certain national marks such as the German „Ü" conformity mark.

The application of the CE marking must be based on a Declaration of Performance issued by the manufacturer. This Declaration of Performance (DOP) is based on the European Construction Products Regulation. The Düker DOPs can be downloaded at www.dueker.de/dop.

However, unlike former "Ü" mark, the CE marking on cast iron drainage pipe products is not based on any third-party quality tests. All tests (with the exception of a fire test for the European classification „non-combustible") are carried out and confirmed only by the manufacturer himself. For this product, the CE marking is not an effective statement about product quality.

GEG quality association cast iron drainage technology

In order to fulfil the increasing safety requirements of our partners in plumbing, trade, planning and authorities, the European cast iron pipe industry as well as suppliers of accessories founded the IZEG. IZEG and the integrated quality association GEG award a RAL quality label to cast iron drainage pipes and fittings that have passed a number of tests defined in the RAL GEG quality directives.

Those awarded with the RAL GEG quality label are subject to an initial test as well as regular third-party surveillance by an authorized institute. The requirements for this label are considerably higher than those of EN 877, particularly regarding the resistance of the inside coating. Unlike the CE marking, this quality label guarantees users a permanently high product quality.

Reaction to fire

The term „reaction to fire" describes how much heat, smoke etc. a building product contributes to a fire.
Düker MLK-protec pipes and fittings have been tested against

- EN 13823 Reaction to fire tests for building products; Single Burning Item Test (SBI Test)
- EN ISO 1716 Fire technical testing of building products – Determination of calorific potential.

Based on the results of these tests, the Düker MLK-protec pipe system was classified as per EN 13501-1 Fire classification of construction products and building elements - Part 1: Classification using data from reaction to fire tests.

The Düker MLK-protec pipe system has been certified to correspond to A2, s1, d0 "non-combustible".

01 Resistance chart

The following resistance chart should give the specifier some information on the material to select. The chart is not complete and is valid for non-pressure pipe systems with discontinuous operation at the specified temperature.

It shows the resistance of the inside coating of MLK-protec pipes and fittings and of the EPDM and NBR rubber sealings.

As the level of chemical resistance also depends on the combination of various factors such as temperature, pressure, concentration, contamination and a possible mixing of agents, as well as duration, intensity and surface of contact, this chart should be used as a guideline only.

If you are in doubt, please contact our technical staff, also for chemicals not mentioned. Please use the inquiry form chemical resistance, which you will find on our website at: www.dueker.de > Drainage Technology > Downloads.

description	formula	conc.	pH	MLK-protec			EPDM			NBR		
				20°C	50°C	90°C	20°C	50°C	90°C	20°C	50°C	90°C
Water												
sweet water				+	+	+	+	+	+	+	+	+
salt water	H_2O/NaCl	30g/l	5,6	+	+	+	+	+	+	+	+	+
demineralised water	H_2O	100%	6,4	+	+	–	+	+	–	+	+	–
waste water as per EN 877			7,0	+	+	+	+	+	+	+	+	+
Inorganic acids												
sulphuric acid	H_2SO_4	10%	1,0	+	+	–	+	+	–	–	–	–
nitric acid	HNO_3	10%	2,0	+	–	–	+	–	–	–	–	–
phosphoric acid	H_3PO_4	25%	1,0	+	–	–	+	–	–	–	–	–
phosphoric acid	H_3PO_4	10%	1,3	+	–	–	+	–	–	–	–	–
phosphoric acid	H_3PO_4	5%	1,8	+	+	–	+	+	–	–	–	–
phosphoric acid	H_3PO_4	3%	2,0	+	+	+	+	+	+	–	–	–
hydrochloric acid	HCL	10%	0,7	–	–	–	–	–	–	–	–	–
hydrochloric acid	HCL	5%	1,0	+	–	–	+	–	–	–	–	–
hydrogen peroxide	H_2O_2	10%	3,5	+	–	–	+	–	–	–	–	–
Organic acids												
acetic acid		10%	2,0	+	–	–	+	–	–	–	–	–
acetic acid		30%	1,7	+	–	–	+	–	–	–	–	–
lactic acid		1%	2,0	+	–	–	+	–	–	–	–	–
lactic acid		10%	1,1	+	–	–	+	–	–	–	–	–
citric acid		5%	1,5	+	+	+	+	+	+	–	–	–

description	formula	conc.	pH	MLK-protec 20°C	MLK-protec 50°C	MLK-protec 90°C	EPDM 20°C	EPDM 50°C	EPDM 90°C	NBR 20°C	NBR 50°C	NBR 90°C
Bases												
sodium base	Na_2CO_3	10%	11,4	+	+	–	+	+	–	+	+	–
sodium base	Na_2CO_3	50%	11,9	+	+	–	+	+	–	+	+	–
potassium base	K_2CO_3	10%	12,0	+	+	–	+	+	–	+	+	–
potassium base	K_2CO_3	50%	12,4	+	+	–	+	+	–	+	+	–
ammonium	NH_3	10%	12,1	+	+	+	+	+	+	–	–	–
Javel water	NaClO	10%	12,0	+	+	+	+	+	+	–	–	–
Javel water	NaClO	30%	12,0	+	+	+	+	–	–	–	–	–
Salts												
monosodium phosphate	NaH_2PO_4	3%	4,2	+			+			–		
ammonium sulphate	$(NH_4)_2SO_4$	3%	6,7	+			+			–		
potassium chloride	KCl	3%	4,2	+			+			–		
Solvents												
turpentine				+			–			+		
super petrol				+			–			+		
diesel				+			–			+		
crude oil				+			–			+		
xylene	C_8H_{10}			+			–			–		
cyclohexane	C_6H_{12}			+			–			+		
propanone (acetone)	C_3H_6O			+			+			–		
ethanol	C_2H_5OH			+			+			–		
glycol (ethylene glycol)	$C_2H_6O_2$			+			+			+		
Detergents												
multi-purpose cleaner		5%		+	+	+	+	+	+			
washing-up liquid		5%		+	+	+	+	+	+			
washing agent		5%		+	+	+	+	+	+			
bathroom cleaner		5%		+	+	+	+	+	+			
vinegar-based cleaner		5%		+	+	+	+	+	+	–	–	–
chlorine-free toilet cleaner		10%		+			+					
toilet cleaner with chlorine		10%		+			+					
drain cleaner with chlorine		10%		+			+					
disinfectant		5%		+			+					
stain remover		5%		+			+					

02 MLK-protec Range of products

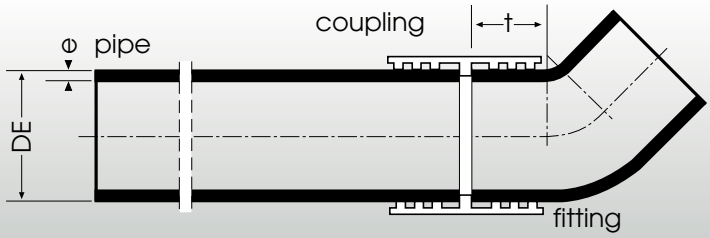

Constructional dimensions:

pipe diameter
wall thickness
insertion lenghts (sealing zone)
pipe weights
surface

MLK-protec pipes and fittings (EN 877 and DIN 19522)									
nominal diameter	exterior diameter		wall thickness pipes and fittings		insertion length (sealing zone)	admissible interior pressure		pipe weight empty	surface ca. m²
DN	DE	tolerance	nominal	minimum	t	pipes up to	fittings*** up to	ca. kg/m	per m
50	58	+2/-1	3.5	3.0	30	10 bar	10 bar	5.3	0,18
70*	83	+2/-1	3.5	3.0	35	10 bar	10 bar	6.6	0,26
80**	83	+2/-1	3.5	3.0	35	10 bar	10 bar	6.6	0,26
100	110	+2/-1	3.5	3.0	40	10 bar	10 bar	8.5	0,35
125	135	+2/-2	4.0	3.5	45	10 bar	10 bar	11.6	0,42
150	160	+2/-2	4.0	3.5	50	10 bar	5 bar	14.0	0,50
200	210	+2.5/-2.5	5.0	4.0	60	10 bar	5 bar	23.8	0,65
250	274	+2.5/-2.5	5.5	4.5	70	10 bar	3 bar	32.1	0,85
300	326	+2.5/-2.5	6.0	5.0	80	10 bar	3 bar	45.1	1,02
400	429	+2/-3	6.3	5.0	80	10 bar	2 bar	64.1	1,35
* obsolete model, on request									

** the nominal diameter DN 80 with a minimum interior diameter of 75 mmcorresponds to DN 80 as per EN 12056-2 as well as to DN 75 as per EN 877 (product standard)

*** except inspection pipes, siphons, hermetic plugs and connection pieces

All dimensions in mm

MLK-protec pipes



Important:
pipe ends cut on site have to be protected with the Düker pro-cut tape.

MLK-protec pipe DIN 19522		
L = 3000 mm		
DN	kg	item no.
50	15.8	239289
70*	18.7	660097
80	19.8	239291
100	25.4	660187
125	34.8	660277
150	42.1	660367
200	71.5	660457
250	96.3	660657
300	135.3	660667
400	192.2	660607
* obsolete model, on request		

Düker pro-cut tape



Düker pro-cut tape as cut edge protection	
	item no.
Spool with 10 m each	239071

Butyl rubber with fluor polyethylene sheet. One spool is sufficient for approx. 30 cut edges DN 100.
Düker pro-cut tape has to be expressly ordered, it is not delivered automatically with the pipes.

Reducers (R)
(adapters)

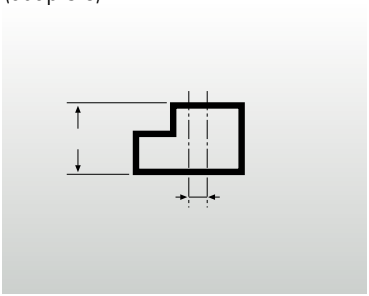

MLK-protec reducer DIN 19522

DN	A	L	kg	item no.
70x50*	10	75	0.5	662507
80x50	12.5	80	0.7	239211
100x50	25	80	0.9	662517
100x70*	16	85	0.9	662527
100x80	13.5	90	1.0	239215
125x50	38.5	85	1.4	662537
125x70*	28.5	90	1.5	662547
125x80	26	95	1.7	239284
125x100	12.5	95	1.5	662557
150x50	51	95	2.0	662567
150x70*	41	100	2.0	662577
150x80	37.5	100	2.3	239285
150x100	25	105	2.2	662587
150x125	12.5	110	2.2	662597
200x100	50	115	4.1	662607
200x125	37.5	120	4.1	662617
200x150	25	125	4.3	662627
250x150	57	140	6.8	662637
250x200	32	145	7.0	662647
300x150	83	150	10.7	662497
300x250	26	170	12.4	662727
400x300	51.5	180	15.0	662447

* obsolete model, on request

Down pipe supports (FS)

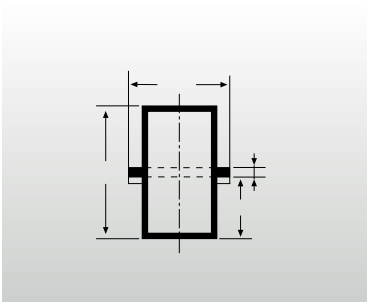

MLK-protec down pipe support DIN 19522

DN	D	X	L	kg	item no. support **without** bearing ring
80	114	96	200	1.8	239267
100	145	96	200	2.3	661567
125	170	96	200	3.0	661577
150	195	96	200	4.0	661587
200	245	96	200	6.0	661597

Bearing ring

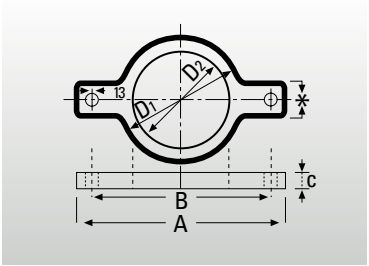

DN	D_1	D_1	A	B	C	*	kg	item no.
80	86.5	120	214	166	31	32	1.0	239259
100	115	147	250	202	28	33	1.3	666337
125	138	171	275	225.5	28	33	1.5	666347
150	163	199	301	253.5	30	33	2.0	666357
200	215	250	360	310.5	30	36	3.0	666377

Bearing rings with rubber for down pipe supports (FS)

Bends 88°

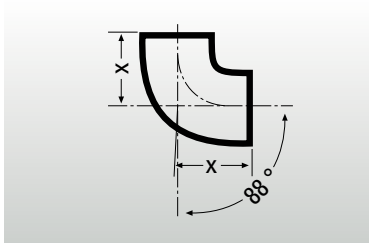

MLK-protec bend DIN 19522			
DN	X	kg	item no.
50	75	0.7	661057
70*	90	1.1	661117
80	95	1.4	239213
100	110	2.1	661177
125	125	3.2	661237
150	145	4.9	661297
200	180	8.8	239605
250	225	13.8	239643
300	260	28	240276

Bends 68°

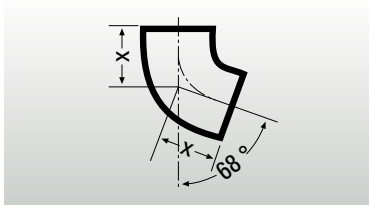

DN	X	kg	item no.
50	65	0.7	661037
70*	75	1.1	661097
80	80	1.2	239264
100	90	1.9	661157
125	105	2.9	661217
150	120	4.9	661277

Bends 45°

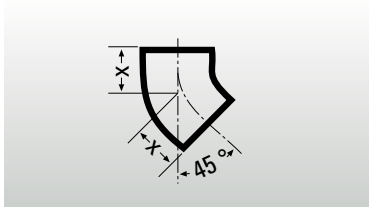

DN	X	kg	item no.
50	50	0.5	661027
70*	60	0.9	661087
80	60	1.0	239201
100	70	1.6	661147
125	80	2.3	661207
150	90	3.5	661267
200	110	6.5	661327
250	130	10.3	661377
300	155	17.3	661397

Bends 30°

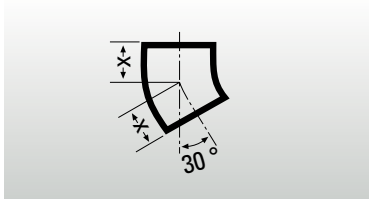

DN	X	kg	item no.
50	45	0.5	661017
70*	50	0.7	661077
80	60	0.8	239232
100	60	1.3	661137
125	70	2.0	661197
150	80	3.0	661257
200	95	5.4	661317
250	110	9.7	661367
300	130	15.5	661387

Bends 15°

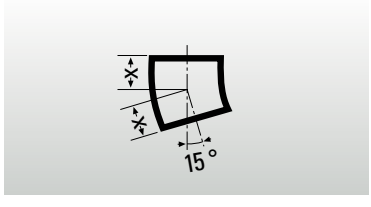

DN	X	kg	item no.
50	40	0.4	661007
70*	45	0.6	661067
80	50	0.7	239233
100	50	1.0	661127
125	60	1.7	661187
150	65	2.5	661247
200	80	4.6	661307

* obsolete model, on request

Bends 88°

with 250 mm spigot (LB)

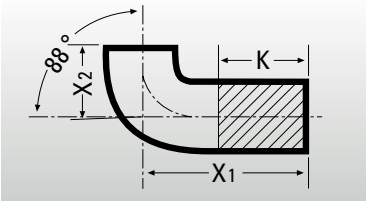

MLK-protec bend DIN 19522					
DN	X_1	X_2	K*	kg	item no.
100**	250	110	140	4.6	662087

*dimension for maximum cut-back
**obsolete model, on request

Bends 45°

with 250 mm spigot (LB)

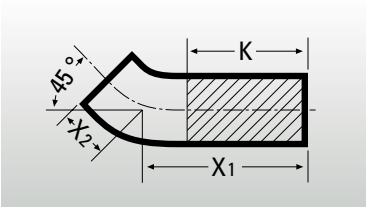

MLK-protec bend DIN 19522					
DN	X_1	X_2	K*	kg	item no.
100**	250	70	280	4.2	662077

*dimension for maximum cut-back
**obsolete model, on request

Double bends 88°

from 2 bends 44° (DB)

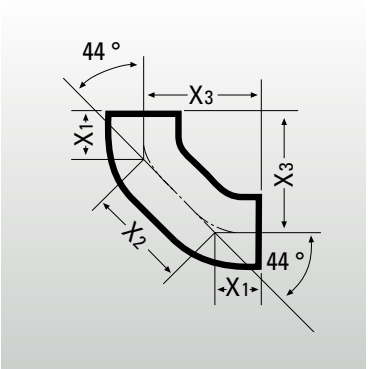

MLK-protec bend DIN 19522					
DN	X_1	X_2	X_3	kg	item no.
100	70	140	170	3.2	661507

Bends 88° (BB)

with 250 mm steadying distance for the transition of down pipes to horizontal pipes

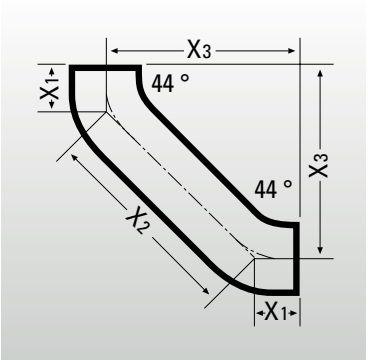

MLK-protec bend DIN 19522					
DN	X_1	X_2	X_3	kg	item no.
80	60	301	273	3.4	239343
100	70	312	291	4.8	662747
125	80	322	308	6.8	662757
150	90	334	326	9.6	662767

Bends 135°

for ventilation (bypass)

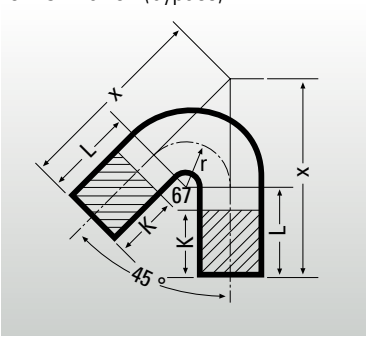

MLK-protec bend DIN 19522					
DN	X	K*	L	kg	item no.
100	312	100	150	5.0	662777

*dimension for maximum cut-back

S-bends (SP)

offset (A) = 65 mm

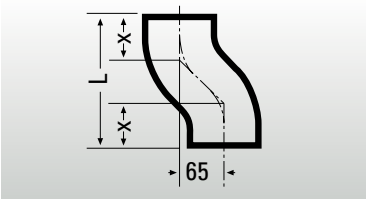

MLK-protec S-bend DIN 19522				
DN	X	L	kg	item no.
100**	70	205	2.5	662867

**obsolete model, on request

S-bends (SP)

offset (A) = 130 mm

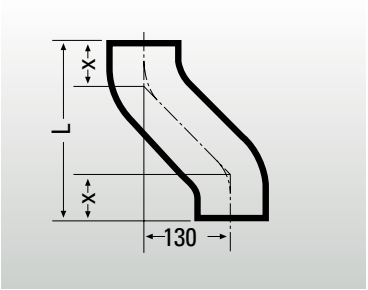

MLK-protec S-bend DIN 19522				
DN	X	L	kg	item no.
100**	70	270	3.5	662877

**obsolete model, on request

S-bends (SP)

offset (A) = 200 mm

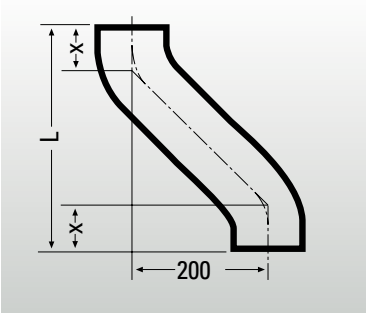

MLK-protec S-bend DIN 19522				
DN	X	L	kg	item no.
100**	70	340	4.5	662887

**obsolete model, on request

Branches 45°

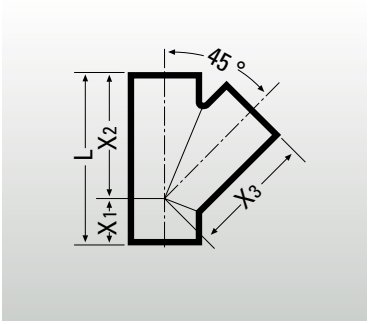

MLK-protec branch DIN 19522

DN	X_1	X_2	X_3	L	kg	item no.
50 x 50	50	135	135	185	1.4	663007
70 x 50*	40	150	150	190	1.6	663037
80 x 50	50	140	140	190	1.8	239222
70 x 70*	55	160	160	215	2.3	663067
80 x 80	65	160	160	225	2.4	239225
100 x 50	35	165	165	200	2.5	663097
100 x 70*	50	185	185	235	3.3	663127
100 x 80	55	175	175	230	3.3	239214
100 x 100	70	205	205	275	4.2	663157
125 x 50	20	185	185	205	3.4	663187
125 x 70*	40	200	200	240	4.3	663217
125 x 80	40	200	200	240	4.4	239251
125 x 100	60	220	220	280	5.2	663247
125 x 125	80	240	240	320	6.4	663277
150 x 70*	30	215	215	245	5.6	663337
150 x 80	40	215	215	245	5.9	239254
150 x 100	55	240	240	295	6.8	663367
150 x 125	70	255	255	325	8.0	663397
150 x 150	90	265	265	355	9.2	663427
200 x 70*	15	240	240	255	8.1	663487
200 x 80	15	240	240	255	8.5	239255
200x 100	40	265	265	305	10.0	663517
200 x 125	55	280	280	335	11.9	663547
200 x 150	75	300	300	375	13.3	663577
200 x 200	115	340	340	455	17.2	663607
250 x 100	15	310	310	325	15.4	663637
250 x 125	35	335	335	370	17.7	664507
250 x 150	55	350	350	405	20.2	664517
250 x 200	90	385	385	475	25.1	663647
250 x 250	130	430	430	560	31.5	663657
300 x 100	5	345	345	350	22.0	663667
300 x 125	15	360	360	375	23.9	664527
300 x 150	35	380	380	415	26.9	664537
300 x 200	70	415	440	485	34.0	664447
300 x 250	115	465	465	580	42.1	663677
300 x 300	155	505	505	660	50.1	663687
400 x 300	105	555	565	660	60.0	663697

*obsolete model, on request

MLK-protec Double Branches 45°

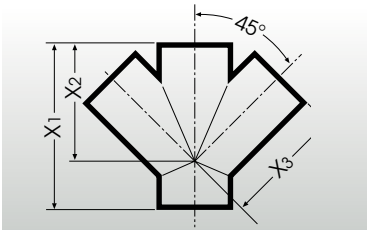

MLK-protec double branch 45°

DN_1	DN_2	DN_3	X_1	X_2	X_3	kg	item no.
100	100	100	260	190	190	5,1	239565
125	100	100	280	220	220	6,5	239606
150	100	100	280	225	225	8,2	661447

Branches 88°

access angle 45°

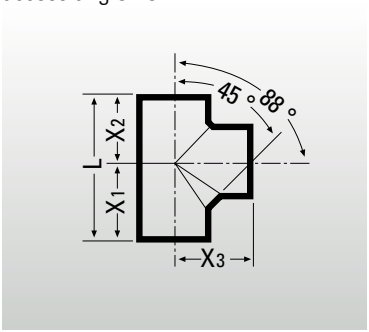

MLK-protec branch DIN 19522

DN	X_1	X_2	X_3	L	kg	item no.
50 x 50	79	66	80	145	0.9	663027
70 x 50*	83	72	90	155	1.4	663057
80 x 50	95	85	90	180	1.5	239256
70 x 70*	97	83	95	180	1.7	663087
80 x 80	95	85	95	180	1.7	239257
100 x 50	94	76	105	170	2.1	663117
100 x 70*	102	88	110	190	2.4	663147
100 x 80	105	85	110	190	2.6	239250
100 x 100	115	105	120	220	2.9	663177
125 x 50	98	82	120	180	3.0	663207
125 x 70*	107	93	125	200	3.4	663237
125 x 80	110	94	125	205	3.4	239252
125 x 100	125	110	130	235	4.0	663267
125 x 125	137	123	135	260	4.6	663297
150 x 50	100	100	140	200	4.4	663327
150 x 100	130	115	145	245	5.5	663387
150 x 125	147	128	150	275	6.2	663417
150 x 150	158	142	155	300	6.9	663447
200 x 200	205	175	210	380	10.1	663607

*obsolete model, on request

Double branches 88°

access angle 45°

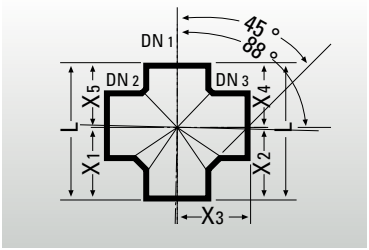

MLK-protec double branch DIN 19522

DN_1	DN_2	DN_3	X_1	X_2	X_3	X_4	X_5	L	kg	item no.
100 x 100 x 100			120	120	120	110	110	230	3.2	663877

Corner branches 88° (EA)

access angle 45°;
corner angle 90°

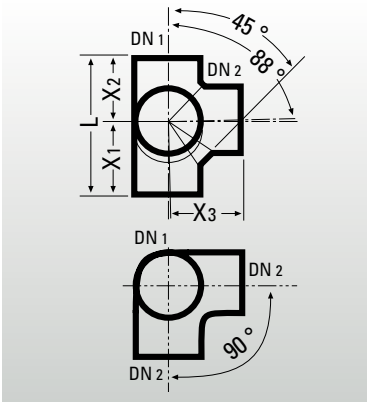

MLK-protec corner branch DIN 19522

DN_1	DN_2	DN_3	X_1	X_2	X_3	L	kg	item no.
100 x 100 x 100			115	105	120	220	3.4	662037

MLK-PROTEC RANGE OF PRODUCTS

Inspection pipes for down pipes, with round opening (RRrd)

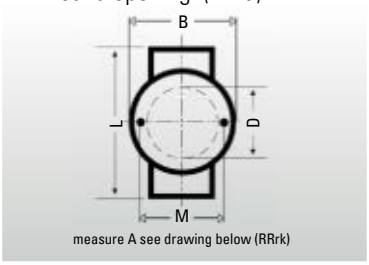

measure A see drawing below (RRrk)

MLK-protec inspection pipe DIN 19522							
DN	A	B	D	L	M	kg	item no.
50	59	105	53	190	80	2.3	239275
70*	69	125	73	210	100	2.9	239276
80	74	135	78	220	110	3.1	239277
100	84	159	104	260	130	5.0	239248

*obsolete model, on request

with toroidal sealing ring in EPDM as per DIN 4060

Inspection pipes
for horizontal and down pipes, with rectangular opening (RRrk)

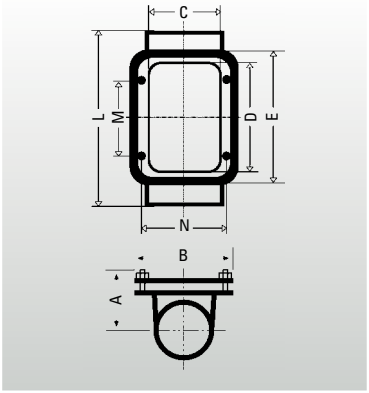

MLK-protec inspection pipe DIN 19522										
DN	A	B	C	D	E	L	M	N	kg	item no.
100	83	160	100	200	230	340	130	130	7.6	669647
125	101	190	125	225	255	370	150	160	10.3	239271
150	112	215	150	250	280	395	170	180	14.5	239272
200	137	262	200	300	330	465	200	235	22.0	239273
250	170	330	259	350	426	570	230	300	36.5	239274
300	195	380	309	400	476	640	280	350	51.0	239296

DN 100 to DN 200 with toroidal sealing ring in EPDM. DN 250 and DN 300 with 6 hermetic plug screws and flat sealing in EPDM.

Plugs (ED)

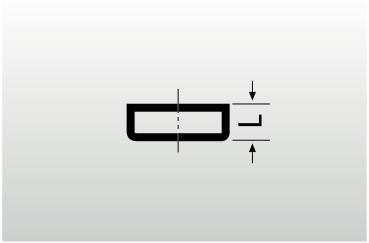

MLK-protec plug DIN 19522			
DN	L	kg	item no.
50	30	0.2	665507
70*	35	0.4	665517
80	35	0.5	239247
100	40	0.5	665527
125	45	1.1	665537
150	50	1.7	665547
200	60	3.1	665557
250	70	6.0	665567
300	80	9.5	665577

*obsolete model, on request

Hermetic plugs
with security collars



MLK-protec hermetic plug		
DN	kg	item no.
100	1.1	664807
125	1.5	664817
150	2.1	664827
200	3.3	664837

Siphons (G)

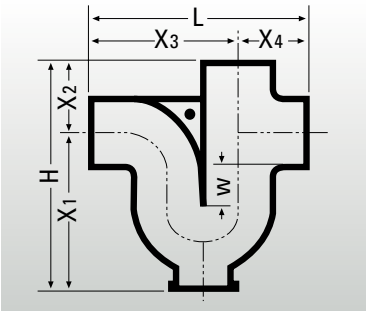

MLK-protec siphon DIN 19522

DN	L	H	X_1	X_2	X_3	X_4	W	kg	item no.
50	190	250	182	68	122	68	60	2.8	239281
70*	265	293	200	93	172	93	60	5.0	239282
80	265	285	190	95	170	95	80	5.8	239283
100	325	392	282	110	215	110	100	8.5	239279
125	390	446	316	130	260	130	100	13.0	239280
150	470	493	348	145	325	145	100	19.5	669667

*obsolete model, on request

The supplying side of the SML odour traps may be connected either to the horizontal or the vertical pipe. Bends can guide the outlet into different directions. The supply opening not used is to be closed with a hermetic plug with press-sealing automatically supplied.

Adapters with clamp and wall flange

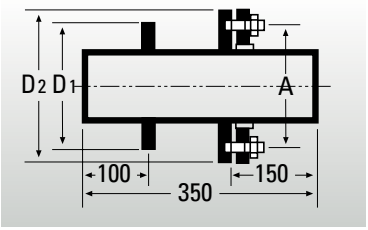

MLK-protec adapter with clamp and wall flange

DN	A	D_1	D_2	kg with clamp flange	item no.
100	191	190	230	11.6	239269

Pipes with wall flange

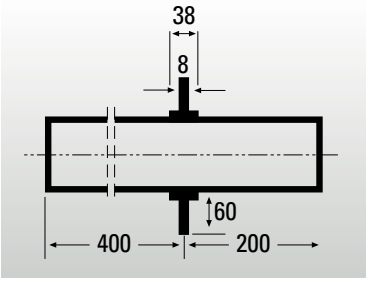

MLK-protec pipe with wall flange

DN	L	kg	item no.
100	600	8.8	662227

Pipes with wall flange and adapters with clamp and wall flange can be used for wall penetrations of drainage pipes which depend upon water and gas impermeability, e.g. in outer walls, floor plate, basement waterproofing.

Installation examples

SML adapters with clamp and wall flange

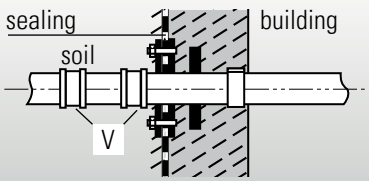

SML pipe with wall flange

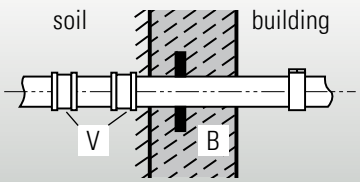

V = SVE coupling to compensate for soil movement B= watertight concrete

Connection foils

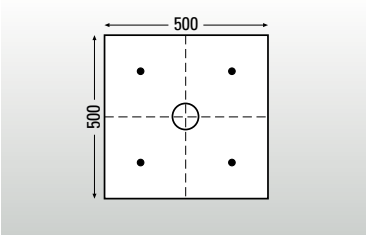

Connection foils

DN	item no.
100	100291

Before pinning the connection foil, it must be glued allover to the clamp flange.

Wash basin connecting bends 90°
for sinks and urinals (OL)

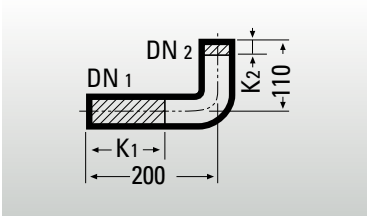

MLK-protec wash basin connecting bend DIN 19522					
DN1 DN2		K1*	K2*	kg	item no.
40 x 50	long	120	20	1.4	661747
50 x 50	long	120	25	1.5	661757
50 x 60	long	120	30	1.5	661767

*dimension for maximum cut-back

Wash basin y-joint 90° (OH)

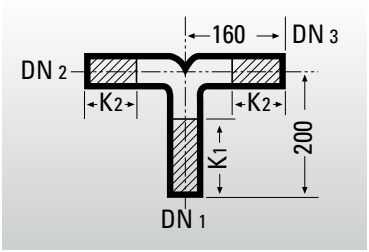

MLK-protec wash basin connecting bend DIN 19522				
DN1 DN2 DN3	K1*	K2*	kg	item no.
50 x 50 x 50	125	85	2.5	661797

*dimension for maximum cut-back

Rubber connections

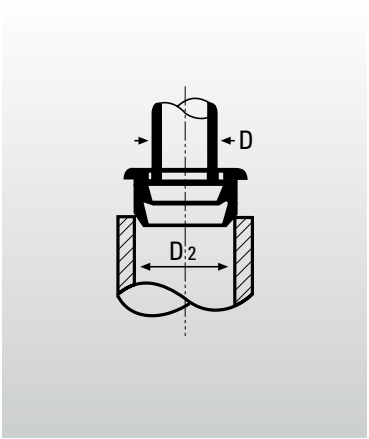

Rubber connections				
for MLK-protec bends DN	D2	D (connecting pipe)	marks**	item no.
50 x 50	40	28-34	40/30 klein (small)	100088
50 x 50 / 40 x 50	50	28-34	40/30 groß (large)	100125
50 x 50 / 40 x 50	50	38-44	40/40	100089
50 x 60	60	28-34	50/30	100092
50 x 60	60	38-44	50/40	100091
50 x 60	60	48-54	50/50	100090

**Please note: the rubber push-in connectors for the bends 40 x 50, 50 x 50 and 50 x 60 bear marks which differ from the nominal widths.

Flange connecting pieces (FL)

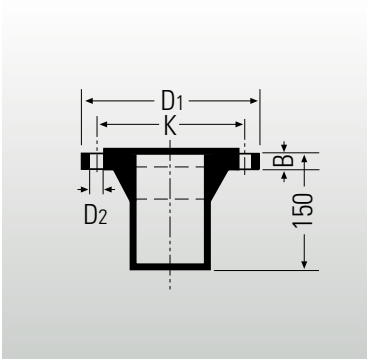

MLK-protec flange connecting piece DIN 19522							
DN	D_1	D_2	B	K*	screws 8 pcs.	kg	item no.
100	220	18	24	180	M16	5.8	665937
125	250	18	26	210	M16	8.0	665947
150	285	22	26	240	M20	9.8	665957
200	340	22	26	295	M20	14.5	665967

Delivery without screws and seals
*8 holes, PN6/PN10 as per EN 1092-2

Cast iron connection pieces

for stoneware (E)

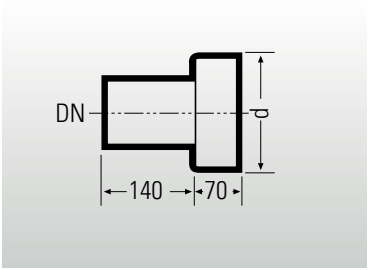

MLK-protec connection DIN 19522			
DN	d	kg	item no.
100	159 ± 2.0	4.9	664927
125	187 ± 3,5	6.7	664937
150	218 ± 3,5	9.7	664947
200	278 ± 3,5	13.3	664957

Connections for these: stoneware-A-ring or Tecotect-se-S seal see SML Specifier's Manual



Dükorapid® coupling				
DN	D≈	H≈	L≈	item no.
50	71	83	47	218592
70*	91	103	47	218593
80	96	107	47	235494
100	123	135	47	214405
125	152	164	54	218594
150	177	189	54	218595
200	230	240	62	240168

*obsolete model, on request ≈ maximum dimensions after installation

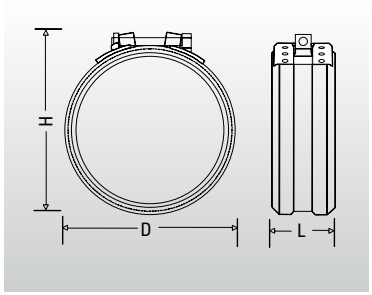

One screw coupling

Material metal collar: W2, stabilised stainless steel, 1.4510/11 as per EN 10088

Material locking parts: lock 1.4301 or 1.4510/11
DN 50-150: screw and square nut steel with zinc lamellae coating, washer A2 as per DIN 125
DN 200: screw and square nut galvanised steel, washer 1.4301 2B as per EN 10088

Material sealing: EPDM

Axial restraint: up to 0.5 bar

Screw size: DN 50-150: M8; DN 200:M10

Torque: DN 50-150: 10-20 Nm; DN 200: 30-40 Nm; if the locks should come together do not tighten any more.

! OUR RECOMMENDATION !



Rapid Inox coupling				
DN	D≈	H≈	L≈	item no.
50	70	80	39.5	234826
70*	90	100	39.5	234827
80	95	105	39.5	235472
100	125	135	45.4	234828
125	147	162	54.5	234829
150	172	187	54.5	234830
200	227	244	70.0	234831
250	278	306	91.0	234832
300	330	359	91.0	234833

*obsolete model, on request ≈ maximum dimensions after installation

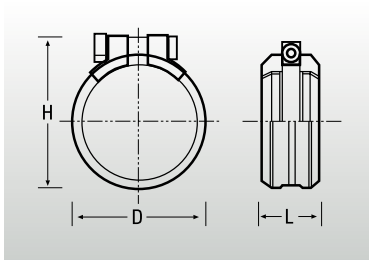

One screw coupling for soil installation without additional corrosion protection and for installation outside of buildings. **Attention:** particularly aggressive soils may call for an additional corrosion protection (e.g. shrinking hose)

Material metal collar: stainless steel, austenitic chromium nickel steel, 1.4571/1.4401 as per EN 10088

Material locking parts: stainless steel, austenitic chromium nickel steel, 1.4571/1.4401 as per EN 10088; screw, washer, square nut: A4

Material sealing: EPDM. NBR on request for waste water containing oil, animal grease, solvents or petrol

Axial restraint: DN 50 - 200: up to 0.5 bar; DN 250 - 300: up to 0.3 bar

Screw size: hexagon socket screw; DN 50 - 150: M 8; DN 200-300: M 10

Torque: until both fastening heads come together

Marking: Marking W5 on the metal collar

! OUR RECOMMENDATION !

FOR INSTALLATION UNDERGROUND AND OUTSIDE OF BUILDINGS



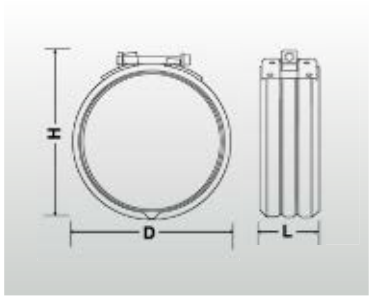

Rapid MSM coupling

DN	D≈	H≈	L≈	item no.
50	70	80	40	239357
70*	90	100	40	239358
80	95	105	40	239359
100	125	135	46	239360
125	147	162	55	239361
150	172	187	55	239362
200	227	244	70	239363

*obsolete model, on request ≈ maximum dimensions after installation

One-screw coupling with hooked-in catch, particularly suited for repairs as it can be laid around the pipe as an alternative to push-on installation

Material metal collar: stainless steel W2, stabilised chromium steel, 14510/11 as per EN 10088
Material locking parts: lock 1.4301 or 14510/11hexagon socket screw with special washer and square nut, steel with surface protection
Material sealing: EPDM
Axial restraint: up to 0.5 bar
Screw size: DN 50-150: M8; DN 200: M10
Torque: until both fastening heads come together



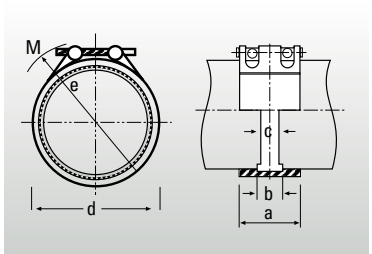

Connect-G Inox coupling

DN	a	b	c	≈d	≈e	item no.
50	78	29	17	85	105	234843
70*	98	40	25	100	120	234844
80	98	40	25	105	125	235482
100	98	40	25	130	150	234845
125	115	50	35	165	195	234846
150	115	50	35	185	215	234847
200	140	67	35	240	270	234848
250	140	67	35	305	335	234849
300	140	67	35	360	390	234850
400	142	67	35	460	490	234851

*obsolete model, on request ≈ maximum dimensions after installation

Coupling with axial restraint for installation in the soil or outside of buildings.
Attention: particularly aggressive soils may call for an additional corrosion protection (e.g. shrinking hose)

Material metal collar: stainless steel, casing 1.4571, claw ring 1.4310
Material locking parts: stainless steel, bolts 1.4401, screws 1.4404
Material sealing: EPDM
Axial restraint: DN 50 - 400: up to 10 bar; DN 600: up to 4 bar
Screw size: DN 50: M 8; DN 70 - 100: M 10; DN 125 - 150: M 12; DN 200 - 400: M 16
Torque: as stated on the coupling



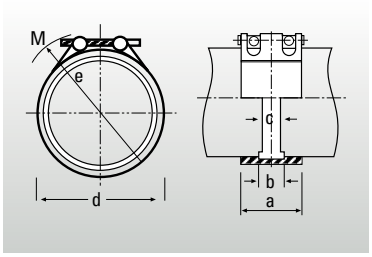

Connect-F Inox coupling

DN	a	b	c	≈d	≈e	item no.
100	98	40	25	130	150	234834
125	113	50	35	165	195	234835
150	113	50	35	185	215	234836
200	138	74	35	240	270	234837
250	138	74	35	305	335	234838
300	138	74	35	360	390	234839
400	139	74	35	460	490	234840

≈ maximum dimensions after installation

Coupling for installation in the soil or outside of buildings.
Attention: particularly aggressive soils may call for an additional corrosion protection (e.g. shrinking hose)

Material metal collar: stainless steel 1.4571
Material locking parts: stainless steel, bolts 1.4401, screws 1.4404
Material sealing: EPDM
Axial restraint: -
Screw size: DN 100: M 8; DN 125 - 150: M 10; DN 200 - 400: M 12
Torque: as stated on the coupling



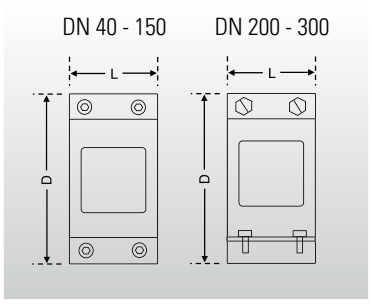

D = exterior diameter of the closed grip collar including bars

Düker Kombi grip collar

DN	D	L	item no.
50	124	72	235360
70*	144	72	235361
80	149	72	235498
100	180	85	235280
125	210	98	235315
150	230	98	235316
200	287	111	235281
250	367	130	216888
300	419	130	100304

*obsolete model, on request

Security collar with axial restraint for all Rapid and CV/CE couplings

Material metal collar: galvanised steel
Material locking parts: galvanised steel, yellow chromated 8 µ 8.8
Axial restraint: DN 50-100: up to 10 bar; DN 125-150: up to 5 bar; DN 250-300: up to 1 bar
Screw size: DN 50-80: round head screws with hexagon socket with washers M 8 x 30; DN 100-150: round head screws with hexagon socket with washers M 10 x 35;DN 200: hexagonal screw with washers and self-locking nut galvanised M 10 x 30, DN 250-300: M 12 x 30
Torque: DN 50 and 70: 18-20 Nm; DN 80: 20-23 Nm; DN 100-125: 30-35 Nm; DN 150: 33-35 Nm; DN 200: 40-50 Nm, DN 250-300: 50-55 Nm

! OUR RECOMMENDATION !
FOR INCREASED INSIDE PRESSURE

The Kombi grip collar has recently been modified. You may receive items of the old or of the new series. Therefore, please observe the torques stated on the installation instructions delivered with the product. General installation instructions see page 62.



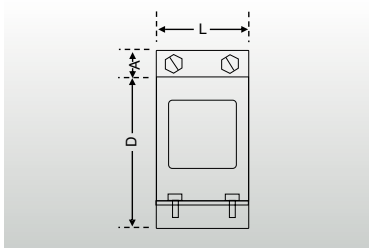

Düker Grip collar

DN	A	D	L	item no.
400	30	460	160	100305

Security collar with axial restraint for CE dual ring coupling

Material metal collar:	galvanised steel
Material locking parts:	galvanised steel
Axial restraint:	up to 1 bar
Screw size:	hexagonal screw with washers and self-locking nut galvanised M 12 x 40 5.6
Torque:	65-70 Nm



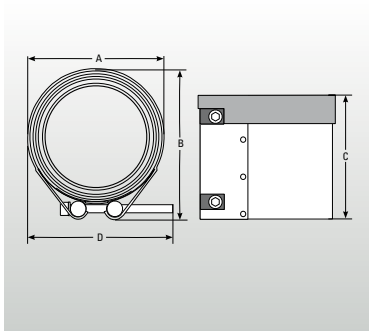

Düker fire protection coupling BSV 90

DN	A≈	B≈	C	D≈	ceiling perforation≈	item no.
80	106	115	135	125	160	237693
100	133	145	135	140	180	237694
125	160	175	150	155	200	237695
150	188	198	150	170	240	237696

Two-screw coupling for installation in ceiling penetrations with fire protection functions

German Approval no.:	ABZ DIBt Z.19.17-1893
Material metal collar:	stabilised stainless steel, 1.4510/11 as per EN 10088
Material locking parts:	galvanised steel
Material sealing:	EPDM
Material plastic insert:	PE-HD / PP
Intumescence material:	expandable graphite on gass fibre fabric, intumescing at approx. 150°C
Axial restraint:	-
Screw size:	M8
Torque:	Until both fastening heads come together; max. 20 Nm

COUPLINGS PROGRAMME



Düker EK Fix coupling

DN	D_1	D_2	D_3	D_4	D_5	L	L_1	L_2	connection	item no.
50	72	56	30	57	67.5	63	19	40	40-56	100270
70*	92	75	41	77	86.5	77	19	52.5	56-75	100271
80	108	75	41	81	91	83	20	52.5	56-75	236756
80	108	90	41	81	91	83	20	55	75-90	235346
100	128	110	78	108	118	95	21	65	104-110	100272
125	145	125	90	132	145	103	26	72	125	100273

*obsolete model, on request

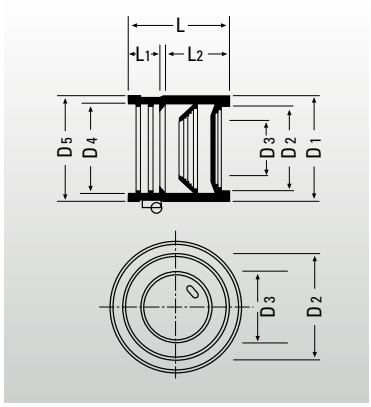

For connecting pipes made of PE-HD / PP to cast iron drainage pipes

German Approval no.: Z-42.5-299
Material: EPDM
Material locking parts: W2, worm thread clamp chromium steel 1.4016, screw chrome (VI)-free
Axial restraint: -
Screw size: cross-slotted screw, width 7
Torque: ca. 2 Nm
Insertion depth: DN 50: 42 mm; DN 70: 55 mm; DN 80: 55-60 mm; DN 100: 65 mm; DN 125: 75 mm



Konfix Multi coupling

DN	D_1	D_2	D_3	D_4	D_5	L	L_1	insertion depth	item no.
100	134	conn. see illustr.		108	116	90.5	35.5	40	100030

For connecting pipes of other materials to cast iron drainage pipes, up to three connecting pipes

German Approval no.: Z-42.5-240
Material: EPDM
Material locking parts: worm thread clamp chromium steel 1.4016, screw galvanised steel
Axial restraint: -
Screw size: worm thread screw SW7
Torque: 5.0 + 0.5 Nm

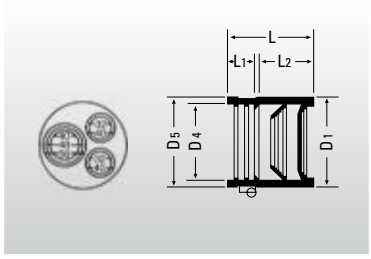



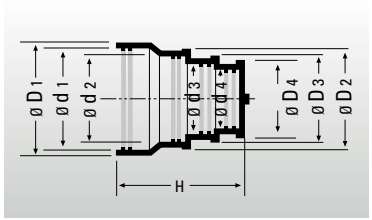

Multiquick coupling

DN	Ø D_1	Ø D_2	Ø D_3	Ø D_4	Ø d_1	Ø d_2	Ø d_3	Ø d_4	H	item no.
100 x 70	117	111	101	81	108	104	93	74	107	234859

Transition coupling for socketless cast iron drainage pipes DN 100 or old cast iron socket pipes DN 100 with an exterior diameter of max. 115 mm to other materials with an exterior diameter of 72 - 110 mm.

German Approval no.:	Z-42.5-240
Material:	EPDM
Material locking parts:	worm thread clamps chromium steel 1.4061, screw galvanised steel
Axial restraint:	-
Screw size:	worm thread screw SW7
Torque:	5.0 + 0.5 Nm

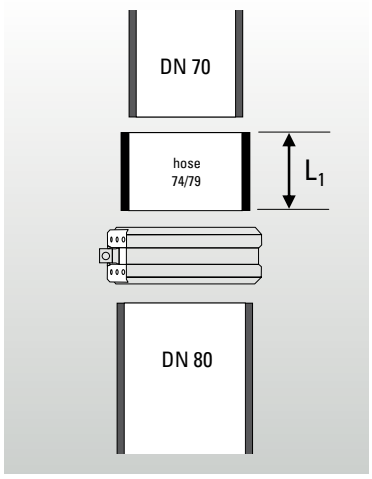

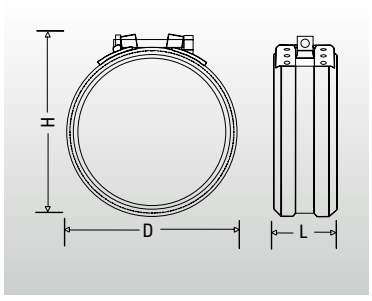

Transition coupling

DN	D≈	H≈	L	L_1	item no.
70 x 80	96	115	47	30	235347

Transition coupling for socketless cast iron drainage pipes and fittings DN 70 and DN 80

Material metal collar:	stainless steel W2, stabilised chromium steel, 14510/11 as per EN 10088
Material locking parts:	lock 1.4301, screw, washer, square nut galvanised, yellow-chromated
Material sealing:	EPDM
Axial restraint:	-
Screw size:	M8 screw with 6 mm hexagon socket
Torque:	10-20 Nm

Treatment of pipes

Düker MLK-protec pipes are delivered in three-meter lengths. Just like standard SML pipes, MLK-protec pipes can be cut to fit the required installation lengths. In order not to disrupt the protection coat, the cut pipes must be provided with the cut edge protection Düker pro-cut tape.

Attention: Düker pro-cut tape must be ordered expressly via the wholesaler, it is not delivered automatically with the pipe.

Düker pro-cut tape

Materials: butyl rubber with fluor polyethylene sheet
Temperature for installation +5 °C up to +40 °C
Storage at +5 °C up to +25 °C

Keep out of the reach of children.

For detailed information, please consult the Technical Datasheet (see www.dueker.de).



1. cut pipe/fitting and trim any sharp edges and clean the surfaces with an appropriate cloth and alcohol so they are absolutely dry and free of dust and grease. The alcohol must evaporate completely before the application of the tape.

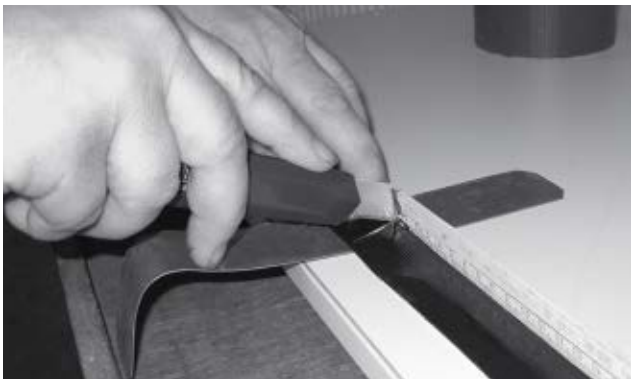

2. cut pro-cut tape to the length of the pipe inside circumference (the measurements in the table are to be observed), warm the tape slightly (heating or other heat source) and lift off the plastic film.

DN	50	70	80	100	125	150	200	250	300	400
mm	160	225	240	325	400	480	630	830	990	1310



3. lay the sticky side of the pro-cut tape onto the outside of the cut pipe, at min. 20 mm from the edge. A possible protrusion of the plastic sheet should come to rest on the outside of the pipe.

4. draw the pro-cut tape around the pipe with slight and uniform tension, to a slight overlapping. If there is a gap, loosen both sides separately and draw the tape with higher tension until it overlaps.

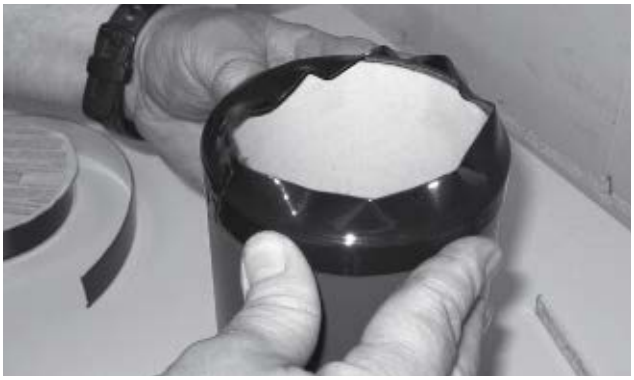

5. fold the tape from the outside to the inside and press it tightly to the inside surface and the pipe edge. On the inside, the tape must fit without tension.



6. finished cut edge protection. If necessary, apply lubricant to install the coupling. Possibly loosen the coupling screws slightly before pushing it on.





Couplings installation instructions

For the couplings installation instructions, please refer to the latest version of the SML Specifier's Manual.

05 Laying instructions Grease drain lines

Introduction

Pipelines leading to grease traps as well as their ventilation lines are subject to considerable strain due to the grease contained in the waste water. Apart from the chemical attack caused by grease and other components, it is particularly the risk of deposits that must be considered. These deposits are a mechanical load in the pipe, but they also multiply the force of the chemical reactions.

Standards

The layout of supply and ventilation pipelines for grease traps is based mainly on EN 1825-2 as well as EN 12056 and possibly other national and local regulations.

Selection of materials

EN 12056-1 calls for adequate structural and chemical resistance of waste water drainage systems. In case of non-domestic waste water, the material selection ought to be based on the recommendations of a manufacturer. Düker recommends the MLK-protec drainage pipe system for the supply to the grease trap and the corresponding ventilation lines.

Regarding couplings, EPDM sealings have proven themselves for many years when used with predominantly vegetable grease. Only in case of predominantly animal grease, Düker recommends to use NBR sealings.

Lay-out of the supply line

On principle, grease traps should be placed as close as possible to the point of origin of the grease-containing waste water, in order to keep the supply as short as possible. In order to achieve an adequate flow velocity and self-cleaning of the pipeline, the waste water is to be transported to the grease trap in a slope of at least 2% (1:50). If the pipeline configuration is unfavourable due to the building lay-out, or if the supply line has to be quite long, a thermal insulation might be necessary in order to prevent grease deposits. However, such an unfavourable pipeline lay-out ought to be avoided whenever possible.

The transition of a down pipe to a horizontal pipe is to be made with a double bend with 250 mm steadying distance, or with a corresponding piece of pipe between to 45° bends. After the transition to the horizontal pipe, another steadying distance is to be observed before connecting to the grease trap, whose length must be at least ten times the nominal diameter (for DN 100: 1000 mm). This is necessary in order to avoid extreme turbulences of water and grease which would impair the effectiveness of the grease trap.

The waste water volume Q_s in the pipeline leading to the grease trap is calculated as per annex A of EN 1825-2; the dimensioning of the pipeline is then carried out according to EN 12056.

Ventilation and inspection openings

EN 1825-2 says that the pipeline leading to the grease trap is to be ventilated over the roof as a principle; the same applies to each single connecting pipeline with more than 5 m length. If the supply line does not have any such ventilated connecting pipeline on the last 10 m before the grease trap, another ventilation must be integrated as closely as possible to the grease line.

German DIN 1986-100 allows to combine the various ventilation lines of the supply line, connecting line and even the grease trap itself to be combined to one collecting ventilation line. However, ventilations of other drainage pipelines or that of the waste water lifting plant, which is often installed behind the grease trap, may not be integrated here.

A sufficient number of inspection openings at favourable positions must be installed so the pipeline can be inspected or cleaned fast whenever necessary.

Thermal insulation and heating

The informative annex D of EN 1825-2 gives recommendations as to where thermal insulation or even heating may make sense in order to avoid deposits of grease. Thermal insulation may be necessary where pipelines, particularly longer pipelines, cross chilly basements; in case of not frost-free building sections even a heating with insulation is conceivable.

Pipeline trace heatings are recommended for portions of pipelines that are subject to frost. In order to save energy, annex D of EN 1825-2 recommends an automatic timer (adjustment range between 25 °C and 40 °C). Furthermore, the elevated costs for installation, operation, and repair of a trace heating must be considered. It is recommended to consult the manufacturer of the pipe trace heating.

For pipelines that are not subject to frost, the necessity of insulation should be verified in detail. Elevated waste water temperatures in the grease trap impair its effectiveness. Therefore, a certain cooling of the often hot waste water may be desirable.

Example: On a horizontal pipeline of 50 m length in DN 100, with 2% slope and 50% filling level, the waste water has a flow velocity of 1 m/s, so it only takes 50 seconds from the drain to the grease trap. Depending on its original temperature and the ambient temperature, insulation will often be superfluous here. However, concrete recommendations are only possible for each individual case.

Undergound installation

Selection of material

The product standard EN 877, paragraph 4.8.3.2, contains detailed specifications for the required outside coating on cast iron drainage pipe systems installed underground:

„Pipes shall have an outside coating comprising a layer of metallic zinc covered by a finishing paint compatible with zinc. (…) When measured, the mean mass of zinc per unit area shall not be less than 130 g/m². (…)

Paragraph 4.8.3.3 says:

„Fittings and accessories shall have a coating (…) of a quality at least equivalent to that of the pipes e.g. (…) epoxy resin based coatings."

The Düker pipe systems TML, MLK-protec and MLB satisfy these requirements. SML, however, is not suitable for underground installation.

In paragraph 4.8.4.1, there are specifications for the materials of couplings in underground installation:

„All parts of couplings or clamping components shall be made of cast iron and coated in accordance with 4.8.3.3, or from austenitic stainless steel in accordance with EN 10088-1, EN 10088-2 and EN 10088-3 with at least 16.5% chrome and 8.5% nickel or equivalent, or from material of comparable resistance".

The stainless steel collars and clampings of all „Inox" couplings correspond to these requirements (Rapid Inox, Connect-F Inox, Connect-G Inox). The SVE coupling can be considered a „material of comparable resistance". Due to their ease of installation however we recommend to use Rapid couplings.

Attention: CE couplings, which used to be common practice in underground installation, do not consist of a material that is up to the requirements of paragraph 4.8.4.1 of EN 877.

Should any components be installed that do not correspond to paragraph 4.8 of EN 877, these items must be given an on-site corrosion protection e.g. a bituminous wrapping of the manufacturer Denso.

Soil conditions

The soil aggressiveness is to be determined on the basis of many factors, such as soil type, state, water content, pH value, content in sulphide, sulphate and chloride.

Düker TML, MLK-protec and MLB as well as "Inox" couplings are appropriate for the following soil grades as per German DVGW worksheet GW9:

- Ia (practically not aggressive)
- Ib (slightly aggressive)
- II (aggressive)

In case of very aggressive soils (soil grade III), an additional corrosion protection such as Denso must be applied to the complete pipeline. The same applies to laying in ground water.

Pipe bedding

Planning and execution of the pipe bedding are to be carried out as per EN 1610 paragraph 7; the German ATV-DVWK worksheet A139 "Installation and inspection of waste water pipelines and canals", or corresponding local regulations are also to be recommended.

The thickness of the lower bedding layer of compressible material is at least 100 mm; this value should be increased by one tenth of the pipe diameter. In case of very hard soil, the value is at least 150 mm and should be increased by one fifth of the pipe diameter.

The thickness of the upper bedding layer is to be determined by the specifier.

For couplings, if necessary holes should be provided for in the bedding so the pipeline does not rest on the connections.

Static calculation

The static calculation follows German ATV-DVWK worksheet A127 "Guidelines for the static calculation of waste water pipelines and canals", or local regulations.

Compression of trench filling material

The compression is to be carried out according to EN 1610, paragraph 11 as well as German ATV-DVWK worksheet A139 „Installation and inspection of waste water pipelines and canals" or corresponding local regulations.

Bearing load

The bearing capacity of cast iron drainage pipes can be determined on the basis of EN 877, annex C.2.

Due to the superior material stability, TML, MLK-protec and MLB can be used for all cover heights including traffic and surface loads common in site drainage praxis.

In case of correct and expert installation, a cover height of 0.8 to 6 m and a simultaneous traffic load of SLW 60 can be assumed as a guideline.

Leak test

The water tightness of underground waste water pipelines must be proven as per EN 1610. The test is prescribed after filling the pipe trench; an additional test before filling is however recommendable, together with a thorough visual inspection of the pipeline.

On principle, the leak test can be carried out with air or with water. Should a test with air fail, a test with water can be done instead. However, we recommend to test with water from the start.

Leak test with air

The leak test with air is to be carried out according to table 3 of EN 1610. The German plumbers' association ZVSHK recommends the test method LC with a test pressure of 100 mbar, an admissible pressure loss of 15 mbar, and a test duration of 3 to 8 minutes depending on the pipeline diameter.

At first, the pressure is kept up by adding air. This period serves to compensate for temperature differences in the air added. After that, no more air is added and the pressure loss after a defined period of time is measured.

For measuring, electronic devices or the U-pipe-manometer have proved themselves.

Leak test with water

The test can be carried out on the complete pipeline or on defined pipeline sections.

At first, the length of the pipeline must be determined, in order to calculate the inner surface and the admissible quantity of water to be added.

The test pressure is to be calculated as per the pressure of a water column from the pipe crest of the section to be tested up to the ground level, e.g. 2.5 m = 25 kPa (250 mbar). The test pressure is minimum 10 kPa, maximum 50 kPa.

The pipeline is slowly filled with water from the lowest point so the air contained in it is expelled at the highest point. Upon reaching the test pressure, the pipeline must remain completely filled for one hour in order to compensate for temperature differences.

After that starts the test period of 30 minutes. The pressure is to be kept permanently on the level of the predefined test pressure within a tolerance of 1kPa, by refilling water to compensate for any water leakage. The height of the water column above ground level must not surpass 10 cm in order to prevent a pressure increase by more than 1 kPa.

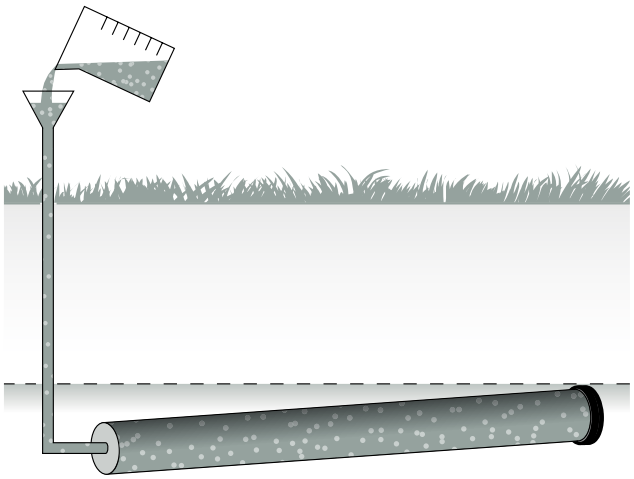

The quantity of refilled water is to be reported. Within the test period it may not surpass:

- 0.15 l/m² interior surface for pipelines
- 0.20 l/m² for pipelines including shafts
- 0.40 l/m² for shafts and inspection openings

The values only for pipelines are for example:

DN	inside surface per pipe in m² approx.	max. water qantity per m pipeline in l approx.
80	0.24	0.036
100	0.32	0.048
125	0.40	0.060
150	0.48	0.072
200	0.63	0.095
250	0.83	0.125
300	0.99	0.149
400	1.31	0.197

Securing against slipping

During the recommended leak test in the open trench, the connections must be secured against slipping.

As the test is carried out at a maximum of 0.5 bar, we recommend using couplings such as Rapid Inox, which are axially restrained up to 0.5 bar.

Should higher pressures occur, it is possible to use Connect-G Inox. Grip collars (e.g. Kombi grip collar) can also be combined with metallic couplings; however these grip collars must either be removed before filling the trench, or they must be given an additional corrosion protection.

Connections can also be secured with abutments, particularly at changes of direction, such as poles driven into the ground, concrete abutments, cones of filled-on material etc.

Drainage pipe system – Düker – MLK-protec system				
no.	qty.	item	unit price	amount
		Socketless cast iron drainage pipes and fittings, approved and manufactured as per EN 877, dimensions as per DIN 19 522, with protec special coating , with CE marking and Declaration of Performance as per CPR. **Short name: Düker MLK-protec pipes and fittings** Pipes inside with a double, separately burnt-in, fully cross-linked two-component epoxy coating outside with zinc coat and a grey epoxy cover coating, fittings inside and outside with powder epoxy coating. Range of products DN 50 – 400 as per the latest price-list. Resistance as per the latest resistance chart. **Installation:** As per Düker installation instructions and in accordance with the technical regulations of of EN 12056 / DIN 1986 part 100 / EN 752, EN 1610. **Handling instructions**: cut ends are to be protected with the Düker cut-edge protection pro-cut tape. **Couplings:** Dükorapid®, Rapid Inox, Connect-F Inox coupling, Connect-G Inox coupling, Düker EK Fix coupling Z-42.5-299 or Konfix-Multi coupling Z-42.5-240 and Multiquick coupling Z-42.5-240 for connection to pipes, fittings and other elements (e.g. floor drain) made of other materials to MLK-protec. The securing of pipelines with the risk of internal pressure and axial restraint require grip collars or Connect couplings. Couplings and grip collars are paid for separately		
1		mtrs. **Düker MLK-protec pipes** in trade lengths of 3000 mm, **DN .....,** including cutting to length, supply and installation material: wages:		
2		spools **Düker pro-cut tape** for cut edge protection, in trade lengths of 10 m, supply and installation material: wages:		

no.	qty.	item	unit price	amount
		Fittings:*		
3		pcs. **Düker MLK-protec bends** all angles (15°,30°,45°,68°,88°), **DN .....,** supply and installation material: wages:		
4		pcs. **Düker MLK-protec branches** all angles (45°, 70°, 88°), **DN ..... x .....,** supply and installation material: wages:		
5		pcs. **Düker MLK-protec reducers, DN ..... x .....,** supply and installation material: wages:		
6		pcs. **Düker MLK-protec plugs, DN .....**, supply and installation. material: wages:		
7		pcs. **Düker MLK-protec inspection pipes** with round opening, for down pipes, **DN .....,** supply and installation material: wages:		
8		pcs. **Düker MLK-protec inspection pipes** with rectangular opening, for horizontal and down pipes, **DN .....,** supply and installation material: wages:		
9		pcs. **Düker MLK-protec down pipe supports** including supporting ring with rubber ring, **DN .....,** supply and installation material: wages:		

no.	qty.	item	unit price	amount
10		pcs. **Dükorapid® couplings***,** metal collar made of stabilised chromium steel, material no. 1.4510/11 as per EN 10088, lock with only one screw, locking plates made of material no. 1.4301 as per EN 10088; screw and square nut steel with zinc lamellae coating, washer A2. Sealing collar made of EPDM, **DN ……..,** supply and installation. material: wages:		
11		pcs. **Rapid Inox couplings****, lock with only one screw, all parts made of material no. 1.4571/1.4401 as per EN 10088, sealing collar made of EPDM**, **DN ……..,** supply and installation. material: wages:		
12		pcs. **Connect-F Inox couplings,** metal collar made of material no. 1.4571, locking parts made of material no. 1.4401, screws made of material no. 1.4404, sealing collar made of EPDM, **DN ……..,** supply and installation. material: wages:		
13		pcs. **Connect-G Inox couplings,** coupling with axial restraint, metal collar made of material no. 1.4571, locking parts made of material no. 1.4401, screws made of material no. 1.4404, claw ring made of material no. 1.4310, sealing collar made of EPDM, **DN ……..,** supply and installation. material: wages:		
14		pcs. **Düker EK Fix couplings,** approval no. Z-42.5-299, made of EPDM, including clamp straps, for connection of pipes made of other materials to MLK-protec, **DN ……..,** supply and installation. material: wages:		
15		pcs. **Konfix Multi couplings,** approval no. Z-42.5-240 made of EPDM, including clamp straps, for connection of pipes made of other materials to MLK-protec, **DN 100,** supply and installation. material: wages:		
16		pcs. **Multiquick couplings,** approval no. Z-42.5-240 made of EPDM, including clamp straps, for connection of pipes made of other materials to MLK-protec, **DN 100,** supply and installation. material: wages:		

no.	qty.	item	unit price	amount
17		pcs. **Kombi grip collars*****, securing grip collar with axial restraint for Dükorapid® and Rapid Inox couplings as well as CV and CE couplings on pipelines subject to inside pressure, **DN** ....., supply and installation. material: wages: *for further fittings please refer to the product range ** if applicable the rubber quality is to be modified to NBR. *** this coupling must be equipped with an additional corrosion protection in case of soil installation.		

NOTES

Düker

DRAINAGE TECHNOLOGY

GLASS LINING TECHNOLOGIES

JOBBING FOUNDRY

FITTINGS AND VALVES

Düker GmbH & Co. KGaA

Würzburger Straße 10
D-97753 Karlstadt /Main
Germany

Phone +49 9353 791-0
Fax +49 9353 791-198

Internet: www.dueker.de
E-Mail: info@dueker.de

239375 / 04.14 Specifications subject to change without notice.