Düker

DRAINAGE TECHNOLOGY



SML Specifier's Manual

Düker cast iron drainage pipe systems
for building drainage



made
in
Germany

Düker SML Pipe System

Gneral Information

Fire Protection

Acoustic Protection

Pipes and Fittings

Couplings

Installation Instructions

Design and Pipe Laying

Specifying Texts

Contact



TABLE OF CONTENTS

General Information

Aspects in Favour of Cast Iron 4–5
Application, Standards 6
Approvals 7
Quality and Safety 8–10
Environmental Protection 11–12
Material Properties 13
Coatings and Linings 14
Marking 15
Manufacture 16–17
Contact 108

Fire Protection

Cast Iron Benefits 18–21
Building Codes and Approval Documents 22–23
German MLAR 24–25
Approved Solutions 26
Mixed Installation 27–29
Pipelines Installed in Escape and Emergency Routes 30

Acoustic Protection

Test Certificate 32
Measures, Acoustic Decoupler 33–34

01 SML Delivery Programme

SML pipes and fittings – construction dimensions 37
SML pipes 37
SML reducers 38
SML down pipe supports and bearing rings 38
SML bends 39–42
SML offsets/S-bends 43–44
SML branches 45–49
SML inspection pipes 50
SML plugs 50
SML siphons, installation examples 51–53
SML rain water stand pipes 53
SML adapter with clamp and wall flange 54
SML pipe with wall flange 54
SML roof penetration, installation examples 54–55
SML connecting bend 56
SML connecting Y-pipe 56
Rubber connectors 56
SML manifold connectors 56
Further Connections to SML 57
WC connectors, installation examples 57–61
SML Boss Pipes 62
SML connector 62
SML connection for vitrified clay pipes 62
Connections of SML Pipes to other Soil Pipes 63–64

02 Couplings Programme

Dükorapid® coupling 67
Dükorapid® Inox coupling 67
Rapid Inox coupling 68
CV coupling 69
CE coupling 69
Düker CE dual ring coupling 70
SVE coupling 70
Connect-F Inox coupling 71
Connect-G Inox coupling 71
Düker Kombi grip collar 72
Düker grip collar 72
Düker EK Fix coupling 73
Konfix Multi coupling 73
Multiquick coupling 74
Transition coupling 74
Düker Fire protection coupling BSV 90 75
SML couplings: recommended application areas 76

03 Installation Instructions

Assembling and Installation Instructions for Düker Couplings 79–80
Dükorapid® Coupling / Dükorapid® Inox Coupling / Rapid Inox Coupling 81
CV / CE Coupling 82
Connect-F Inox / Conect G-Inox 83
Düker Kombi Grip Collar / Düker Grip Collar 84
SVE Coupling 85
Düker EK Fix Coupling / Konfix Multi Coupling 86
Multiquick Coupling 87
Transition Coupling DN 70 - DN 80 88

04 Design and Pipe Laying

Cutting Pipes 91
Imbedding Cast Iron Pipes in Concrete 92
Underground Installation of Cast Iron Drainage Pipelines 93
Installation Outside of Buildings 93
Maintenance and Pipe Cleaning 93
Fixings 94–95
Electrical Continuity 96
Flow Capacities 97
Aquaperfect 98–101
CAD Product Data 102–103

05 Specifying Texts

Specifying Texts 104–107

General Information

Düker Cast Iron Pipes are Fire Protection Pipes

- non-combustible construction product – no contribution to the development of fires (flashover), no thermal loads
- Düker SML with the best reaction to fire classification on the market: A1 as per EN 13501-1
- open installation in escape routes
- no formation of smoke – smoke is the fastest and most frequent cause of death in a fire
- penetration seals with well-tried German MLAR solutions are easy and low-priced
- fire transmission into lower storeys is prevented without fail
- the functionality is maintained throughout a fire if pure cast iron installations are chosen

Düker Cast Iron Pipes are Acoustic Protection Pipes

- cast iron with flake graphite is extremely sound-absorbent due to its structure and mass
- with the acoustic decoupler, Düker SML reached unrivaled low values (13 dB(A) at 4 l/s, quieter than falling snow)

Düker Cast Iron Pipes are Easy to Handle and to Install

- with suitable tools, cast iron can be cut easily, fast and accurately (page 91)
- no danger of cracks due to handling at low temperatures
- Rapid couplings ensure a fast, accurate and axially restrained connection (page 81)
- the comprehensive range of fittings offers solutions for all problems of building installation (pages 37 to 64)
- due to the stability of the pipes, few brackets need to be installed (pages 94 to 95)
- thanks to the inferior thermal length expansion, no deflection legs, expansion sockets, anchored and sliding fixings etc. need to be considered (pages 13 and 95)
- laying in concrete is possible without any problems (page 86)
- even for siphonic drainage, no particular fixing (trace railing or similar) needs to be used (pages 100 to 103)
- special versions are available for underground installation or bridge drainage (page 14)
- different cast iron drainage pipe versions are always compatible among each other and do not require any special transition pieces (page 14)

Düker Cast Iron Pipes are Stable and Resistant

- cast iron pipes are resistant to positive and negative interior pressure, even in larger diameters (pages 38 and 79 to 80)
- the pressure resistance is not interdependent with medium or environment temperature, neither at high nor at low temperatures
- cast iron pipes are absolutely UV-resistant, no material embrittlement
- cast iron pipes do not show the typical plastic phenomenon of thermal shrinkage (shortening of plastic pipes after exposure to heat, therefore withdrawing from the socket)
- cast iron pipes are „vandalism-safe“

Düker Cast Iron Pipes are Environmentally Friendly

- cast iron pipes are manufactured from practically 100% recycling material (cast iron scrap)
- cast iron pipes do not emit any volatile organic compounds (VOC) (page 10)
- due to the socketless construction, even smaller pipe cuttings can still be used, therefore reduction of waste
- waste remaining after installation or after the end of life of the drainage pipe system can be recycled without any problems

Düker Cast Iron Pipe Systems are Manufactured in Germany

- elevated safety and environment protection standards in the production facilities
- known superior quality, with RAL GEG quality seal
- safe warranty ensured by a well-established manufacturer
- complete couplings programme „made in Germany“
- elevated stock supplies for fast deliveries
- manufacture in central Germany for short distances to clients within Europe
- calculation and planning of siphonic roof drainage systems as a customer service (pages 98 to 101)
- your Düker contact persons are in direct contact with production (page 108)



When considering and evaluating all positive aspects of Düker cast iron pipes, one will inevitably arrive at the conclusion that Düker cast iron pipe systems offer an excellent price-performance ratio, also compared with the alternatives. Bear in mind the inexpensive solutions for acoustic and fire protection, bracketry etc. In particular in larger residential and administrative buildings, hotels, hospitals and special-care facilities, **Düker cast iron pipe systems are your first choice!**

APPLICATION, STANDARDS

Areas of Application

The European standard EN 877 is valid for prefabricated parts of cast iron pipes for construction - normally as non-pressure pipelines - of building drainage systems as well as connecting drains. The nominal diameter range covers DN 40 up to and including DN 600. This standard contains requirements for material, dimensions and tolerances, mechanical features, composition, standard coatings for cast iron pipes, fittings and accessories. Further it contains functional requirements for all prefabricated parts including couplings. It is valid for pipes, fittings and accessories which are manufactured by casting process, no matter which type, or from cast parts, and for the corresponding couplings. Düker SML drainage pipe systems are in accordance with this standard and exceed its requirements by far in many respects. Also the demands of DIN 19522 and ISO 6594 are surpassed.

Planning and Installation

Planning and installation of SML pipelines follow the technical regulations and stipulations of

- EN 12056 Gravity drainage systems inside buildings
  - Part 1: General and performance requirements
  - Part 2: Sanitary pipework, layout and calculation
  - Part 3: Roof drainage, layout and calculation
  - Part 4: Waste water lifting plants – Layout and calculation
  - Part 5: Installation and testing, instructions for operation, maintenance and use
- EN 752 Drain and sewer systems outside buildings
- EN 1610 Construction and testing of drains and sewers

and other applicable European, national or local standards and regulations.

Applicable Product Standards

Düker SML meets the requirements of

- ISO 6594 Cast iron drainage pipes and fittings - spigot series
- EN 877 Cast iron pipes and fittings, their joints and accessories for the evacuation of water from buildings – Requirements, test methods and quality assurance
- DIN 19522 Cast iron drainage pipes and fittings without socket (SML)

and other international standards.

CE Conformity

CE In 2008, the relevant product standard EN 877 for cast iron drainage pipe systems became a so-called harmonised standard. This means that it now contains an annex ZA with details about the product characteristics and testing required for CE marking.

The manufacturers are now required to apply the CE marking to their products as per EN 877 in order to confirm the product's suitability for the free trade inside the EU. The CE marking replaces certain national marks such as the German „Ü" conformity mark.

The application of the CE marking must be based on a Declaration of Performance issued by the manufacturer. This Declaration of Performance (DOP) is based on the European Construction Products Regulation.

However, unlike former "Ü" mark, the CE marking on cast iron drainage pipe products is not based on any third-party quality tests. All tests (with the exception of a fire test for the European classification „non-combustible") are carried out and confirmed only by the manufacturer himself. For this product, the CE marking is not an effective statement about product quality.

For the latest version of the Düker Declarations of Performance (DOP), please visit **www.dueker.de/dop.**

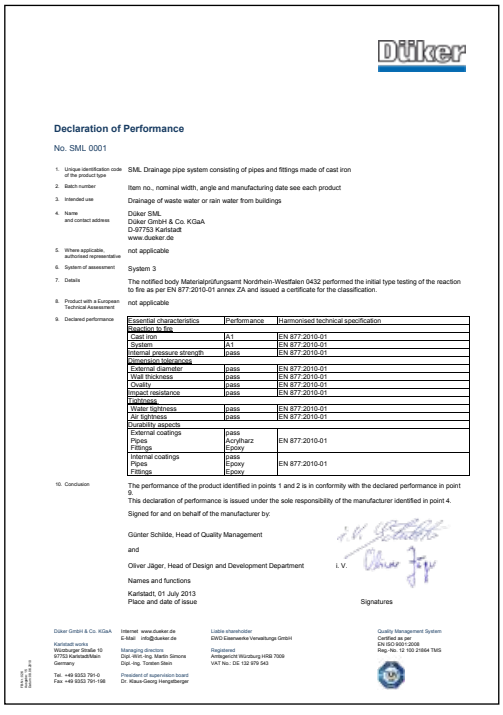

Düker

Declaration of Performance

No. SML 0001

1.	Unique identification code of the product type	SML Drainage pipe system consisting of pipes and fittings made of cast iron
2.	Batch number	Item no., nominal width, angle and manufacturing date see each product
3.	Intended use	Drainage of waste water or rain water from buildings
4.	Name and contact address	Düker SML Düker GmbH & Co. KGaA D-97753 Karlstadt www.dueker.de
5.	Where applicable, authorised representative	not applicable
6.	System of assessment	System 3
7.	Details	The notified body Materialprüfungsamt Nordrhein-Westfalen 0432 performed the initial type testing of the reaction to fire as per EN 877:2010-01 annex ZA and issued a certificate for the classification.
8.	Product with a European Technical Assessment	not applicable

9. Declared performance

Essential characteristics	Performance	Harmonised technical specification
Reaction to fire		
Cast iron	A1	EN 877:2010-01
System	A1	EN 877:2010-01
External pressure strength	pass	EN 877:2010-01
Dimension tolerances		
External diameter	pass	EN 877:2010-01
Wall thickness	pass	EN 877:2010-01
Ovality	pass	EN 877:2010-01
Impact resistance	pass	EN 877:2010-01
Tightness		
Water tightness	pass	EN 877:2010-01
Air tightness	pass	EN 877:2010-01
Durability aspects		
External coatings Pipes Fittings	pass Acrylharz Epoxy	EN 877:2010-01
Internal coatings Pipes Fittings	pass Epoxy Epoxy	EN 877:2010-01

10. Conclusion

The performance of the product identified in points 1 and 2 is in conformity with the declared performance in point 9.
This declaration of performance is issued under the sole responsibility of the manufacturer identified in point 4.
Signed for and on behalf of the manufacturer by:

Günter Schilde, Head of Quality Management

and

Oliver Jäger, Head of Design and Development Department

Names and functions

Karlstadt, 01 July 2013
Place and date of issue

i. V.

Signatures

Düker GmbH & Co. KGaA
Karlstadt works
Würzburger Straße 10
97753 Karlstadt/Main
Germany
Tel. +49 9353 791-0
Fax +49 9353 791-156

Internet www.dueker.de
E-Mail info@dueker.de
Managing directors
Dipl.-Wirt.-Ing. Martin Simons
Dipl.-Ing. Torsten Stein
President of supervision board
Dr. Klaus-Georg Hengelbergen

Liable shareholder
EWD Eisenwerke Verwaltungs GmbH
Registered
Amtsgericht Würzburg HRB 7009
VAT No.: DE 132 979 543

Quality Management System
Certified as per
EN ISO 9001:2008
Reg.-No. 12 100 21664 TMS

Approvals

While the CE marking and the Declaration of Performance are the only documents that are legally required for the use of cast iron drainage pipe systems in the European Community, national quality seals still exist in several countries. Outside of the EC, official approvals may still be necessary.

Düker SML is officially approved in

Australia
No. WMKT 20057
for Düker SML DN 50-300

Czech Republic
No. J-30-20817-04
for Düker SML, MLK, MLB, TML

France (NF)
No. 4/1
for Düker SML DN 50 - 400

Hungary
No. ATB-5/2010
for Düker SML, MLK-protec, MLB, TML

Norway
No. 0401 and 0408
for Düker SML

Russia
No. POCC DE. E01.H38694
for Düker SML DN 50-300

Sweden
No. 0041/04
for Düker SML

Switzerland
No. 23005
for Düker SML

Ukraine
No. UA1.0012427-13
for Düker SML

United Kingdom
BBA Agrément No. 04/4189
for Düker SML DN 50 – 300

Kitemark No. KM 613082
for Düker/Harmer SML DN 50 - 300

GEG Quality Association Cast Iron Water Evacuation Technology

In order to fulfil the increasing safety requirements of our partners in plumbing, trade, planning and authorities, the European cast iron pipe industry as well as suppliers of accessories founded the IZEG. IZEG and the integrated quality association GEG award a RAL quality label to cast iron drainage pipes and fittings that have passed a number of tests defined in the RAL GEG quality directives.

Those awarded with the RAL GEG quality label are subject to an initial test as well as regular third-party surveillance by an authorized institute. The requirements for this label are considerably higher than those of EN 877, particularly regarding the resistance of the inside coating. Unlike the CE marking, this quality label guarantees users a permanently high product quality.


Certificate

On the grounds of the test report of

Düker GmbH & Co. KGaA

submitted to its quality committee, the Gütegemeinschaft Entwässerungstechnik Guss e.V.
(Quality Association for Cast Iron Drainage Technology) hereby awards the

Gütezeichen Entwässerungstechnik Guss
(Quality Symbol for Cast Iron Drainage Technology)

approved by the RAL Deutsches Institut für Gütesicherung und Kennzeichnung e.V.
(German Institute for Quality Assurance and Certification)
and protected as a collective trademark by registration with the Deutsches Patent- und Markenamt
(German Patent and Trademark Office)
in conjunction with product-related inscription in accordance with the following logo

for couplings Dükorapid® (W2)

RAL GÜTEZEICHEN
Entwässerungstechnik Guss
RAL-GZ 698/2

Chairman

Certificate

On the grounds of the test report of

Eisenwerke
Friedr. Wilh. Düker GmbH & Co. KGaA

submitted to its quality committee,
the Gütegemeinschaft Entwässerungstechnik Guss e.V.
(Quality Association for Cast Iron Drainage Technology) hereby awards the

Gütezeichen Entwässerungstechnik Guss
(Quality Symbol for Cast Iron Drainage Technology)

approved by the RAL Deutsches Institut für Gütesicherung und Kennzeichnung e.V.
(German Institute for Quality Assurance and Certification)
and protected as a collective trademark by registration with the Deutsches Patent- und Markenamt
(German Patent and Trademark Office)
in conjunction with product-related inscription in accordance with the following logo

RAL GÜTEZEICHEN
Entwässerungstechnik Guss
RAL-GZ 698/1

Sankt Augustin, 15.03.2004
Gütegemeinschaft Entwässerungstechnik Guss e.V.

Chairman

Managing Director

In the RAL-GZ 689 document, latest issue 2014, The GEG association has laid down quality and test provisions for the following areas:

1. General quality and test provisions water evacuation technology cast iron with provisions on initial testing, internal monitoring and third party monitoring as well as documentation and marking.
2. Special quality and test provisions for cast iron drainage pipes and fittings, see tables below
3. Special quality and test provisions for couplings
4. Special quality and test provisions for cast iron drainage pipes and fittings for aggressive sewage
5. Implementing regulations for the quality seal.

The yearly third party monitoring not only targets random samples of products, but also includes a thorough control of the factory quality management system.

The special quality and test provisions for cast iron drainage pipes and fittings define requirements on product quality that are superior to those of the product standards EN 877 and DIN 19522. However, fulfillment of these superior requirements is the precondition for the awarding of the RAL quality seal Water Evacuation Technology Cast Iron.

Test Frequency of Pipes and Fittings:

	Internal initial type testing and production control[1]		Initial test and yearly third-party monitoring[2]
Test Criteria	DIN EN 877 DIN 19522	CE	GEG
Surface condition Roughness, cavities, lumps, misalignment, burrs, unevenness of end faces	–	–	
Material Cast iron with flake graphite EN-GJL-200 (pipes) and EN-GJL-150 (fittings) as per EN 1561		–	
Dimensions and weights Outside diameter, wall thickness, sealing zones			
Admissible tolerances Lengths, straightness of pipes, angles		–	
Dry coating thickness of coatings conformity with initial test and factory standards			
Adherence of coatings			
Absence of pores and blisters in the coating			
Chemical resistance of inside coatings as per EN 877*			-
Superior chemical resistance of inside coatings as per GEG provisions*	-	–	
European classification of the reaction to fire	-	Initial test[3]	-

[1] Initial type testing by the manufacturer; possibly voluntary additional type testing by an accredited laboratory; factory production control and product inspection by the manufacturer
[2] Initial test and yearly third-party monitoring by an accredited laboratory
[3] Initial test by a notified laboratory

*Chemical resistance tests on the inside coating of pipes and fittings:

Medium/ Solution	Concentration (N = normal solution)	pH value	Duration of test (d=days; h=hours)	Temperature in °C	EN 877 CE	GEG
Phosphoric acid	**25%**	**1,0**	**72h**	**40**		x
Acetic acid	**10%**	**2,0**	**48h**	**25**		x
Hydrogene pyroxide solution	**10%**	**3,5**	**48h**	**25**		x
Sulphuric acid		2,0	30d	23	x	x
	0,1N	1,0	30d	**50**		x
Lactic acid	**1%**	**2,0**	**48h**	**25**		x
Citric acid	**5%**	**1,5**	**30d**	**50**		x
Waste water according to EN 877		7,0	30d	23	x	x
		7,0	30d	**50**		x
Natriumhydrogencarbonat solution		12	30d	23	x	x
	0,1N	11,4	30d	**50**		x
Salt water		**5,6**	**10d**	**50**		x
Water (fully desalinated)		**6,4**	**30d**	**50**		x
Salt spray			350h	35	x	x
			1500h	35		x

Düker Management Systems

As early as in 1993, Düker introduced a certified quality management system as per EN ISO 9001. By now, the Düker system has developed into an integrated certified management system as per

- EN ISO 9001 Quality Management
- EN ISO 14001 Environmental Management
- EN ISO 50001 Energy Management
- BS OHSAS 18001 Occupational Health and Safety Management

Sustainability Mission

Düker feels obliged to the environment as well as the economic and social needs of their staff and of society. Sustainability, an integral part of business culture and of everyday activities, is based on three pillars:

- Economy of all activities for securing and developing the company
- Social responsibility to the staff (e.g. occupational health and safety), business partners and society
- Environmental responsibility and energy efficiency as a contribution to a moderate use of all natural resources.

For the detailed Mission Statement please refer to the Düker web page.



CERTIFICATE

This is to certify that

Düker

Düker GmbH & Co. KGaA

Würzburger Straße 10-16
97753 Karlstadt
Germany

with the organizational units/sites as listed in the annex
has implemented and maintains a **Quality Management System**.

Scope:
Development, manufacture, supply and service of cast iron drainage pipe systems, castings made to specification, ductile iron shut-off valves and pressure pipe fittings, highly acid-resistant glass-lined components.

Through an audit, documented in a report, it was verified that the management system fulfills the requirements of the following standard:

ISO 9001 : 2008

Certificate registration no. 511876 QM08
Valid from 2015-03-24
Valid until 2018-03-23
Date of certification 2015-03-21

DQS GmbH

G. Blechschmidt
Götz Blechschmidt
Managing Director

Accredited Body: DQS GmbH, August-Schanz-Straße 21,

CERTIFICATE

This is to certify that

Düker

Düker GmbH & Co. KGaA

Würzburger Straße 10-16
97753 Karlstadt
Germany

with the organizational units/sites as listed in the annex
has implemented and maintains an **Environmental Management System**.

Scope:
Development, manufacture, supply and service of cast iron drainage pipe systems, castings made to specification, ductile iron shut-off valves and pressure pipe fittings, highly acid-resistant glass-lined components.

Through an audit, documented in a report, it was verified that the management system fulfills the requirements of the following standard:

ISO 14001 : 2004 + Cor 1 : 2009

Certificate registration no. 511876 UM
Valid from 2015-07-10
Valid until 2018-07-09
Date of certification 2015-05-12

DQS GmbH

G. Blechschmidt
Götz Blechschmidt
Managing Director

Accredited Body: DQS GmbH, August-Schanz-Straße 21, 60433 Frankfurt am Main 1 / 2

Environmental Protection and Energy Efficiency

In 2011 Düker introduced an environmental and an energy management system as per ISO standards. For Düker, environmental protection and energy efficiency are fundamental for achieving the company goals and an important aspect of each staff member's activities. The use of energy-efficient technologies ranks high in the company. The observance of legal requirements at the place of manufacture in Karlstadt/Germany is only considered a minimum standard.

Reduction of CO_2 Emissions

At the turn of the year 2013/2014, Düker invested in a new cupola furnace in the Karlstadt works, which now melts down the cast iron for the centrifugal casting plant and the moulding plant. The new furnace is a modern hot-blast cupola furnace with long-term refractory lining. Compared to the old furnace, the CO_2 emissions are reduced by 25% with equal melting performances, with simultaneous saving of energy as well as maintenance and refractory repair expenditures.

Recycling

Grey cast iron, the material that Düker drainage pipes and fittings are made of, is 100% recyclable. Scrapped cast iron pipe systems can be processed to new cast iron pipe systems without any trouble. Furthermore, all cast iron pipes and fittings manufactured by Düker today already consist of 100% recycled cast iron. Cast iron scrap does not pose any problems in its disposal. On the contrary, it is a sought-after and expensive raw material.

For plastic materials, normally only "down cycling" is possible, as the material quality decreases significantly through recycling and does not allow to manufacture the same type of products out of the same material twice. However, the majority of plastic waste is not recycled, but is utilized thermally, which means that it is burnt.

REACH

The European chemicals regulation (EC) No. 1907/2006 (REACH) says that chemical substances may only be made available on the market within the area of validity if they were registered beforehand. This is valid from a volume of 1 ton/year. For those chemical substances that are used during manufacturing, Düker, as a so-called "downstream user", has contacted the suppliers of the substances concerned by REACH in order to ensure the registration and evaluation of those substances.

In case of a noteworthy content of SVHC substances (substances of very high concern) in a product, article 33 of the REACH regulation says that suppliers are obliged to transmit corresponding information to the client. However, our products do not contain any substances contained in the candidate list in concentrations of more than 0.1 % weight by weight (w/w).

Safety Data Sheets

For all paints and coatings that Düker delivers for use on site, Düker makes the safety data sheets available on the web page www.dueker.de/SDB.

Green Building Systems

More and more new building projects in Europe are certified to one of the existing green building systems. Alongside the British BREEAM and the Swiss Minergie system, the American LEED and the German DGNB system are predominant. Outside of Europe, the Singapore Green Mark is also a well-known certification system for building projects.

Although energy saving during the operation of the building is the main aspect of most systems, other aspects are also a part of the evaluation and should be considered when selecting products for the installation systems.

LEED

Alongside climate protection this system also aims at health, protection of water resources and ecosystems, promotion of sustainable material resources and similar aspects.

LEED v3 2009, EQ Credit 4.2 and 4.1: volatile organic compounds

At present, LEED v3 2009 is still widely used. It states only one concrete requirement for construction products for sanitary installations: the observance of limit values for volatile organic compounds (VOC).

The inside and outside coatings of Düker drainage pipes and fittings are completely hardened when arriving at the building site and therefore do not emit any volatile organic compounds (VOC) during installation and during the building's operation.

LEED v4 2013: Construction waste management

Any recyclable waste during the construction period should be recycled to as high a degree as possible. Waste from cast iron pipelines is apt to increase the recycling rate as it is accepted without problems by all waste collection centres and normally is even paid for.

LEED v4 2013: Percentage of recycled materials

This aspect aims at high percentages of construction products that are manufactured from recycled material. As Düker SML is manufactured from practically 100% recycling material, it can easily contribute to this requirement.

LEED v4 2013: Acoustic protection

The aim is to observe acoustic protection targets. In order to avoid noise coming from drainage pipeline, Düker SML is the best choice (see pages 32 to 34).

DGNB (Deutsche Gesellschaft für Nachhaltiges Bauen – German Society for Sustainable Construction)

For building projects that aspire a DGNB certification, the individual auditor fixes the performances and certificates required for the construction products. Due to the manufacture in Germany with all corresponding obligations regarding occupational safety, environmental protection etc. and due to the existing certified management systems, Düker is well-placed to meet the required standards. Please let us know the precise requirements for the building project in question so we can help you effectively.

Singapore Green Mark

Regarding the selection of construction products, the Singapore Green mark for building projects relies heavily on product certificates.


SINGAPORE GREEN BUILDING COUNCIL

SINGAPORE GREEN BUILDING PRODUCT CERTIFICATE

Sintalow Hardware Pte Ltd

Pipes & Fittings

Düker

SML

SINGAPORE GREEN BUILDING PRODUCT

GOOD

Düker SML and MLK-protec have each obtained a "Singapore Green Building Product Certificate" with the rating "good". In order to obtain this certificate, the products had to be evaluated regarding their environmental aspects during the whole life cycle. Based on the international standard ISO 14020, The Singapore Green Building Council SGBC evaluates aspects such as the efficiency in energy and water consumption as well as other resources, and the environmental and CO_2 pollution, both during manufacture and during use of the construction product.

The Material Features

Düker drainage pipe systems are manufactured of grey cast iron GG according to EN 1561 - type at least EN-GJL-150 (formerly GG 15 according to DIN 1691) which means an iron and carbon alloy with high graphite content which is integrated in lamella form and finely distributed within the metallic base compound. This Düker-typical crystalline structure gives the material high strength, wear and temperature resistance, excellent corrosion resistance, and a very high damping capacity. Düker SML drainage pipe systems distinguish themselves by robustness, durability, fire resistance and silent operation – even without special insulation or soundproofing.

Interior Coating Resistance of Düker SML Pipes for Domestic Applications with Discontinuous Use

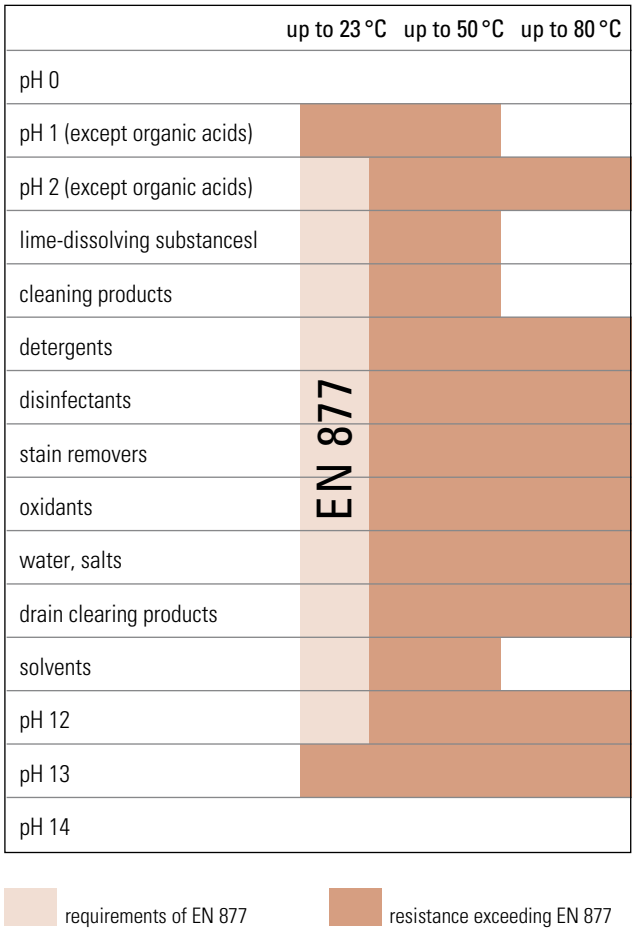

Material Characteristics

DENSITY:
Approx. 7.2 kg/dm^3 (71.5 KN/m^3)

MINIMUM TENSILE STRENGTH:
150 MPa for fittings,
200 MPa for pipes

COMPRESSIVE STRENGTH:
Approx. 3 to 4 times the value of the minimum tensile strength

SHEARING STRENGTH:
1.1 to 1.6 times the value of the minimum tensile strength

CRUSHING STRENGTH:
350 MPa (for DN < 250)
or 332 MPa (for DN ≥ 250)

POISSON'S NUMBER: 0.3

COEFFICIENT OF LENGTH EXPANSION:
0.0105 mm/mK
(between 0° and 100 °C)

THERMAL CONDUCTION COEFFICIENT:
50 - 60 W/mK (at 20°C)

MODULUS OF ELASTICITY:
8 x 10^4 to 12 x 104 N/mm^2

CHEMICAL RESISTANCE:
For use with domestic effluents within a range of ph 2 - ph 12. Well above the values required by EN 877.

For non-domestic applications and for aggressive waste water we recommend to consult with Düker and where applicable to use a different coating such as Düker MLK-protec.

SML Coatings

The SML drainage pipes are coated with a reddish brown base coat on the outside according to the current standard. On the inside, the pipes are provided with a permanent cross-linked epoxy coating which distinguishes itself by high resistance against chemical and mechanical influences. The features of this high-quality coating go beyond the requirements of EN 877. This particularly protects Düker SML drainage pipe systems against domestic effluents which are becoming increasingly aggressive.

The Düker hot permanent mould centrifugal casting process used in the production of our pipes guarantees extremely smooth inside surfaces – the ideal basis for a uniform, blister-free interior coating with fully cross-linked, elastic epoxy material.

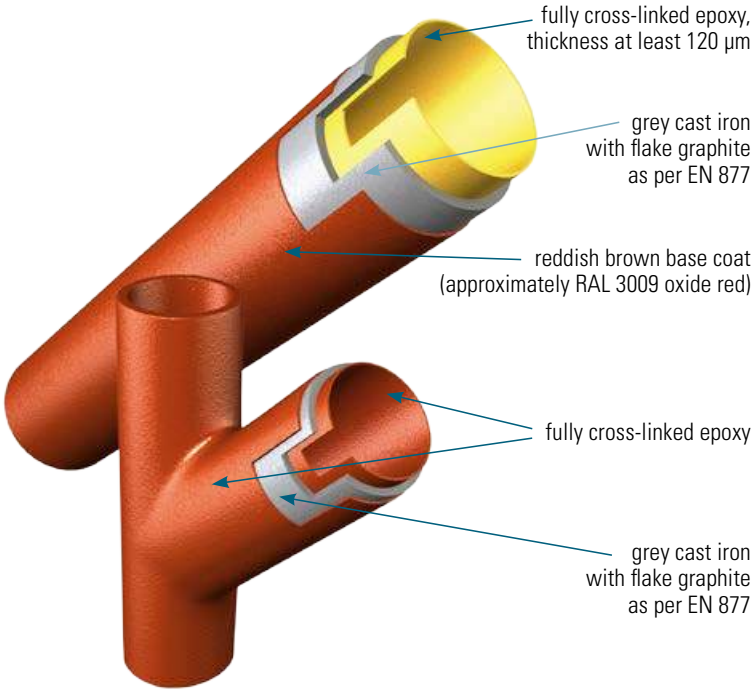

DN 50 up to DN 300 / 400
Application: domestic sewage and rain water drainage inside buildings and on outside walls of buildings.

Further Coating Versions

MLK-protec

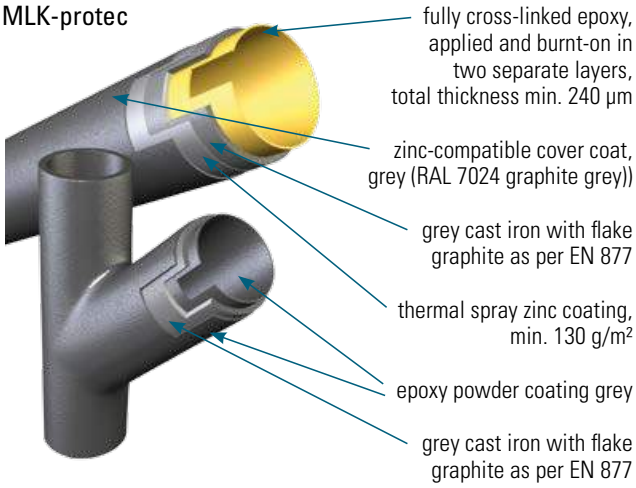

DN 50 up to DN 400
Application: aggressive domestic sewage inside and outside of buildings and in underground installation, e.g. grease-containing sewage from canteen kitchens

MLB

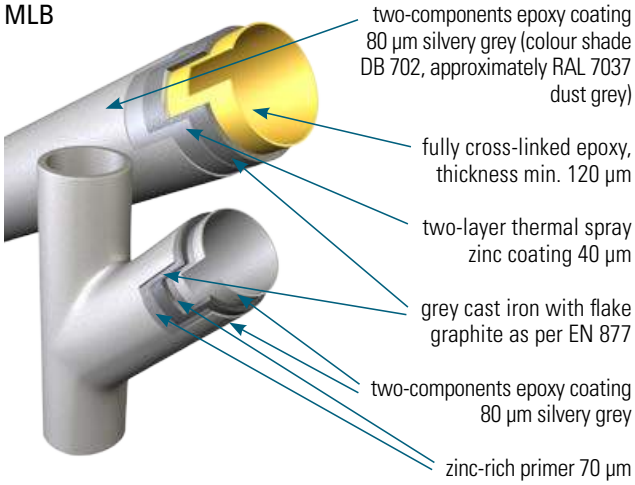

DN 100 up to DN 500 / 600
Application: Rain water drainage for bridges; also suitable for underground installation.

TML

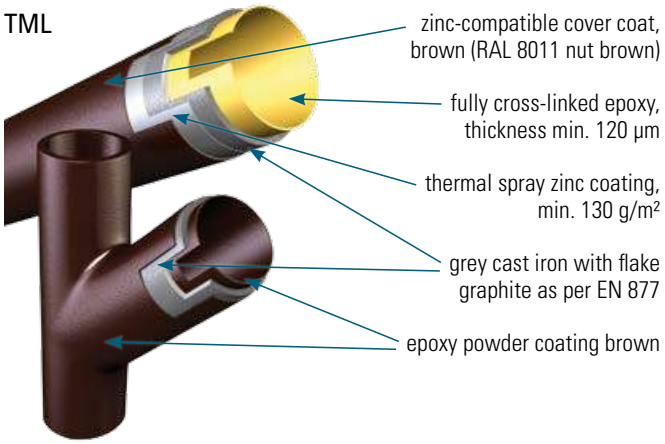

DN 100 up to DN 200
Application: domestic sewage and rain water drainage in underground installation

Marking of Pipes and Fittings

Düker SML pipes and fittings are supplied with an informative marking, which on the one hand fulfills all standard requirements, and on the other hand allows to backtrack the product and its manufacture in the QM documentation. Furthermore, various test and approval marks provide information on further, voluntary approvals, each of which involves regular factory audits.

Pipe Marking

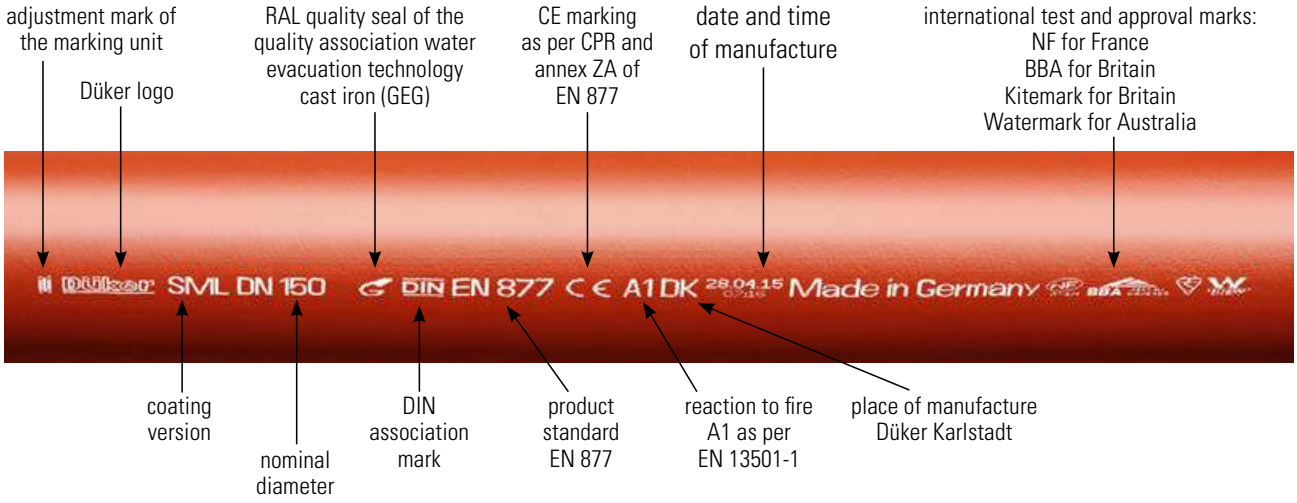

Fitting Marking

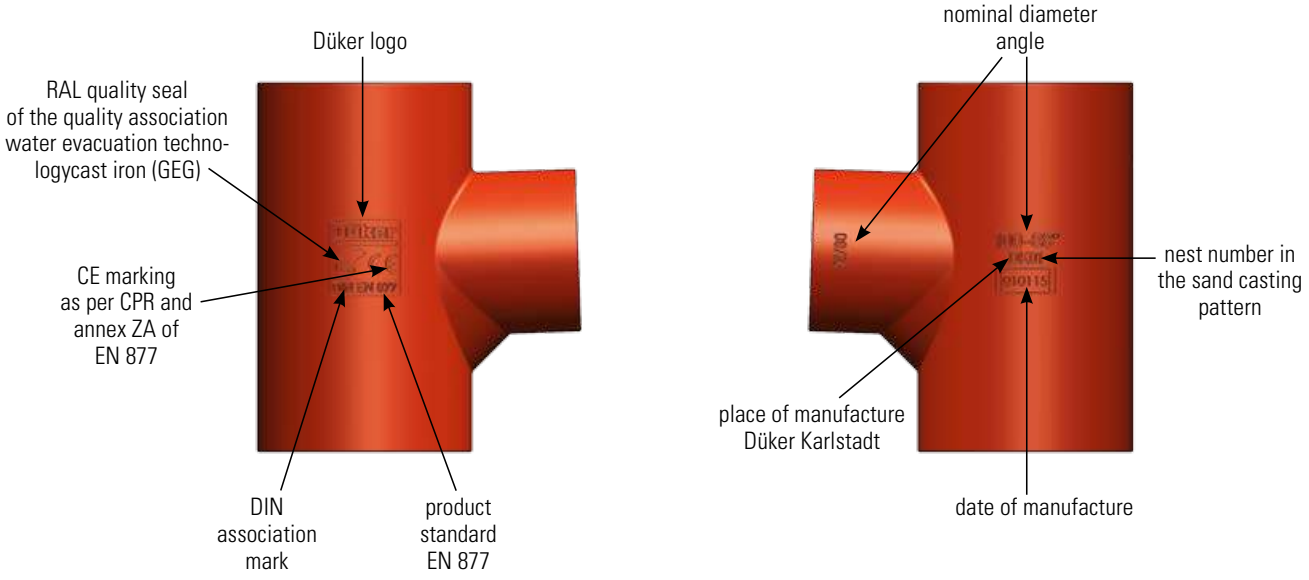

Manufacture

Düker SML pipes and fittings are manufactured entirely in the Düker works in 97753 Karlstadt, Northern Bavaria / Germany following the superior RAL-GEG quality criteria.

For the special versions MLK-protec, TML and MLB, the raw castings are also manufactured in the Karlstadt works, whereas part of the coatings, in particular the zinc coatings, are applied by a local service-provider.

Melting Shop

As the first step, cast iron (scrap material) is melted down in the hot-blast cupola furnace. Regular spectral analyses and, where necessary, dosing of alloy components ensure the permanent superior quality of the grey cast iron material.



Melting shop: Withdrawal of liquid iron from the collector



Moulding plant: pouring into the sand moulds

Fittings Manufacture

Düker fittings are manufactured in the sand casting procedure. For each single casting, the pattern is used to shape a sand mould (for the outside contour of the fitting) and a sand core (for the inside contour of the fitting). The pouring is done in the moulding plant.

The fittings then undergo shotblasting and grinding, and finally coating.

Pipe Manufacture

Düker SML pipes are manufactured on a centrifugal casting plant - developed by Düker - in the so-called hot-mould centrifugal casting process. This results in the typical, extremely smooth inside surfaces as well as lightly structured outside surfaces of Düker pipes. The machining and SML-coating plants are linked directly to the casting plant.

Pipes that are intended for other coatings are withdrawn after leaving the machining plant and coated separately.



Centrifugal casting plant: pouring into the rotating pipe moulds



Karlstadt facility

Couplings

The Dükorapid® metal collars are manufactured by a German subcontractor based on patterns owned by Düker. Subsequently they are assembled with bolts, nuts and sealing collars and packed in local social enterprises.

The quality control is carried out in the Düker goods receiving department in the Karlstadt works.

Fire Protection

Cast Iron Benefit: Non-Combustibility

The term „reaction to fire“ describes how much heat, smoke etc. a building product contributes to a fire.

Düker SML pipes and fittings have been tested against
- EN 13823 Reaction to fire tests for building products; Single Burning Item Test (SBI Test)
- EN ISO 1716 Fire technical testing of building products – Determination of calorific potential.

Based on the results of these tests, the Düker SML pipe system was classified as per EN 13501-1 Fire classification of construction products and building elements - Part 1: Classification using data from reaction to fire tests

The Düker SML pipe system has been certified to correspond to A1 non-combustible.

A1 is the best existing reaction to fire classification as per EN 13501-1. For A1, the further criteria s (for smoke generation) and d (for flaming droplets) do not apply.

Düker MLK-protec, TML and MLB correspond to A2, s1, d0 „non-combustible“.

Düker SML corresponds to A1”non-combustible”

Düker drainage pipe systems are certified to correspond to EN 877. Annex F of EN 877 says that
Cast iron products in accordance with this European Standard are non-flammable and non-combustible. When exposed to fire they will maintain their functional characteristics and integrity for several hours, i.e. their walls will remain impervious to flames and gases and there will be no fracture, collapse or significant deformation. The integrity of connections through walls and ceilings is maintained.

For comparison: plastic pipe systems are combustible. Their reaction to fire classification as per EN 13501-1 may vary, it can be e.g. „D, s2, d1“ or „E“.

PE-HD corresponds to E “normally inflammable”

Cast Iron Benefit: Clear European Classification!

Even if, in Europe, in the long run only the European classification as per EN 13501-1 will be valid, most older national classifications may still be used at present. As the “old” classifications of plastic pipes are better known, simpler and, at first glance, often more positive than the European classification, most plastic pipe manufacturers do not yet publish their classification as per EN 13501-1.

In this table you will find the approximate correspondence between the new European classification and some older national classifications:

<table>
<tr><th colspan="3" rowspan="2">Reaction to fire EN 13501-1</th><th colspan="4">former national classifications</th></tr>
<tr><th>Germany</th><th>France</th><th>Italy</th><th>UK</th></tr>
<tr><td>A1
A2</td><td>s1</td><td>d0</td><td rowspan="2">A</td><td rowspan="2">–
M0</td><td></td><td rowspan="3">limited combustibility</td></tr>
<tr><td>A2</td><td>s1</td><td>d1
d2</td><td rowspan="3">I</td></tr>
<tr><td>A2</td><td>s2
s3</td><td>d0
d1
d2</td><td rowspan="4">B1</td><td rowspan="3">M1</td></tr>
<tr><td>B</td><td>s1
s2
s3</td><td>d0
d1
d2</td><td rowspan="2">II</td><td>0</td></tr>
<tr><td>C</td><td>s1
s2
s3</td><td>d0
d1
d2</td><td>M2</td><td rowspan="2">III</td><td>1</td></tr>
<tr><td>D</td><td>s1
s2
s3</td><td>d0
d1
d2</td><td rowspan="2">B2</td><td>M3</td><td rowspan="3">M4</td><td rowspan="2">3</td></tr>
<tr><td>E</td><td></td><td>d2</td><td></td><td rowspan="2">4</td></tr>
<tr><td colspan="3">F</td><td>B3</td><td></td></tr>
</table>

Most classifications consist of:
A-F for the reaction to fire
s1 – s3 for smoke generation
d0 – d2 for the formation or the degree of flaming droplets

Exceptions:
A1 is always without values for „s“ and „d“, as it is assumed that these construction products do not represent any hazard regarding these criteria.
E is always without values for „s“ and mostly without „d“, as no demands are made. It is automatically assumed that heavy smoke generation and flaming droplets occur. The additional classification d2 is only applied in case of massive flaming droplets.
F is always without values for „s“ and „d“ as no demands are made. For construction products this classification is normally not admissible.

Cast Iron Benefit: No Flashover



Annex A of EN 13501-1 contains some interesting background information on the classification of reaction to fire. The test procedures are based on considerations of the typical phases of a fire in a room.

At first there is only a small-scale fire, e.g. imagine a plastic cable trunking ignited by a cable fire. In the following, the fire spreads, as yet relatively slowly, to combustible materials in close proximity – e.g. along the trunking. In this phase more and more smoke is generated, and the heat radiation increases continuously.

When the heat release surpasses a certain limit (in general a thermal flow density of 15 to 20 kW/m² or a smoke temperature of 500 to 600 °C), all neighbouring combustible materials will ignite in a sudden burst. This is the so-called flashover, the borderline between a beginning fire and a fully developed fire in a room. Before the flashover, a person has a good chance of moving in the room, e.g. close to the floor, and of escape. After the flashover the odds decline rapidly.

The tests as per EN 13501-1 result in a „FIGRA" (fire growth rate) value, which serves to evaluate if and how fast the construction product in question provokes a flashover. The reaction to fire classes can be described as follows:

A1	**no contribution to the development of a fire**
A2, B	no flashover, or flashover after 20 minutes and more
C	Flashover after 10 – 20 minutes
D	Flashover after 2 – 10 minutes
E	Flashover after under 2 minutes
F	no performance determined

In order to differentiate the various performances, the test duration is 20 minutes.

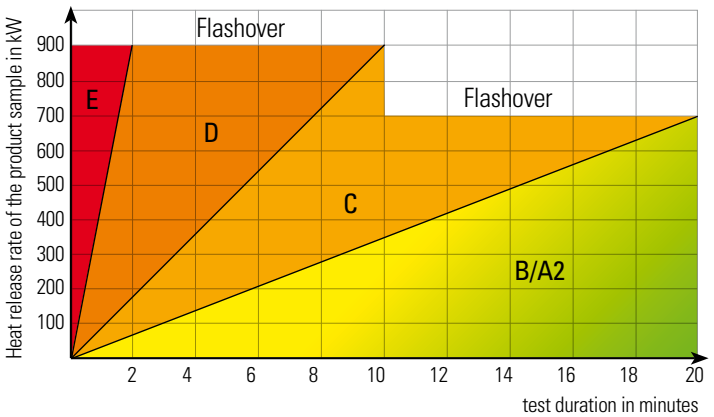

Cast Iron Benefit: No Flaming Droplets

Flaming droplets, i.e. the falling down of burning material, does not occur on Düker drainage pipe systems, neither in tests nor in practice.

EN 13501-1 stipulates a test, the SBI test as per EN 13823, where, among other things, the formation of flaming droplets is watched and registered.

However the observation is only made for a duration of 10 minutes! Furthermore, only those droplets are registered that fall outside of a certain area.

The reason for this short duration is that the reaction to fire is only tested in order to find out how fast a small ignition turns into a full-scale fire and what the construction product in question contributes to it. On combustible construction products, the flashover is reached quite quickly, and further observation would not supply any new information. It is ignored, however, that „flaming droplets" do not only influence the development of a fire within the room of the ignition, but can cross over to other fire compartments.

In a realistic fire test it has been discovered that all brand plastic drainage pipe systems that were installed in the test (also so-called „noise protection pipes") released flaming droplets into the storey below the fire within just over ten minutes.

The burning material collected in bends that were installed in the storey below the fire. In spite of fire collars that were correctly installed, those bends were ignited after just over 20 minutes – the result was a fire spreading downwards!
(test report of MPA NRW Erwitte no. 210003476 dated 10 May 2004).

Fire Test with Plastic Pipes with Correctly Installed Fire Collars

Beginning of the test

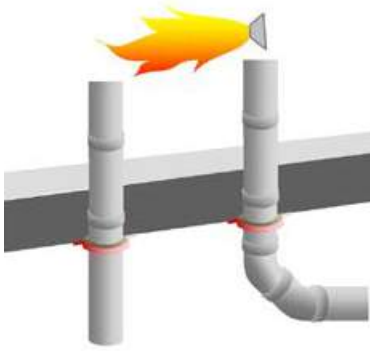

Part of the test installation

After approx. 10 minutes:

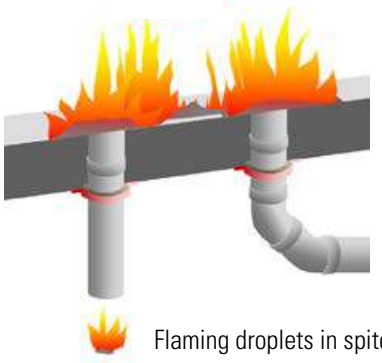

Flaming droplets in spite of correctly installed fire collars

After approx. 20 minutes:

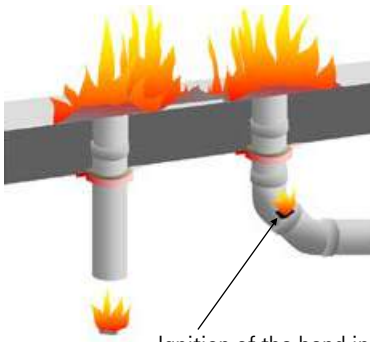

Ignition of the bend in the storey below – fire transfer downwards!

Attention: Although building codes throughout Europe prescribe that a spreading of a fire needs to be prevented for sufficient lengths of time through defined fire compartments in all directions, official approvals for fire-rated penetration seals for pipes only confirm the fire resistance upwards and/or in lateral directions.

The test standard EN 1366-3:2007-07, the basis of the testing of fire-rated penetration seals for pipes, says that the risk of a fire spreading downwards, caused by flaming material which drops through a pipe into the storey below the fire, cannot be evaluated with this test.

All pipe materials where flaming droplets occur therefore lack the proof that their penetration seals can prevent the fire from spreading downwards for a sufficient period of time! Even a reaction to fire with „d0" classification does not give sufficient evidence, as the 10-minutes duration of observation in the SBI-test for reaction to fire is too short!

For Düker SML drainage pipes with Rockwool mineral wool penetration seals, a fire test has proven that there is neither upwards nor downwards spreading of fire over 90 minutes.
(test report of DMT GmbH Dortmund no. 30/2-B dated 28 January 2005).

For further information please consult the IZEG website at www.izeg.de.

Cast Iron Benefit: Little Smoke Generation

If installed with couplings whose rubber gaskets are completely covered by stainless steel collars (e.g. Dükorapid®), the pipe system remains closed in case of fire. Any smoke generated by heat effects on the inner coating remains in the pipeline and is then evacuated through the ventilation openings over the roof. For comparison: 10 kg of polyethylene (PE) or polypropylene (PP) (approx. 7.5 meters of pipe) generate approx. 23,000 m³ of poisonous smoke consisting of carbon monoxide, carbon dioxide and soot. With that quantity, 100 large apartments with 100 m² each can be filled with enough smoke to leave the inhabitants no chance of survival.*

*taken from Bernd Prümer „Brandschutz in der Haustechnik" Gentner Verlag

Cast Iron Benefit: No Thermal Loads

With Düker drainage pipes it is not necessary to consider thermal loads - defined as the energy quantity emitted by a material by combustion. In necessary gangways a maximum of 7 kWh/m used to be allowed, but the latest German regulations forbid any thermal load in gangways and escape routes.

For comparison: polyethylene (PE) emits 12 kWh per kg, fuel oil 11.7 kWh per kg.

Cast Iron Benefit: Limited Length Expansion

The length expansion coefficient of cast iron is only 0.0105 mm/(m·K). In case of a temperature change of 50 K and a pipeline length of 10 m, the length expansion is only 5.25 mm. This expansion is compensated by the normal couplings.

For comparison: A 10 m polyethylene pipe in the same circumstances has a length expansion of 45 mm. Therefore special expansion compensators are required.

BUILDING CODES AND APPROVAL DOCUMENTS

European Construction Products Regulation (CPR)

Annex 1 of the CPR formulates basic requirements for construction works, also regarding fire protection:
"The construction works must be designed and built in such a way that in the event of an outbreak of fire:
(a) the load-bearing capacity of the construction can be assumed for a specific period of time;
(b) the generation and spread of fire and smoke within the construction works are limited;
(c) the spread of fire to neighbouring construction works is limited;
(d occupants can leave the construction works or be rescued by other means;
(e) the safety of rescue teams is taken into consideration."

National Building Codes

National or even regional or local building codes will define how to implement the basic fire safety rules that are to be found in the CPR.

In most countries, buildings are classified according to their size and use. Depending on the building class, the necessary minimum fire resistance of walls and ceilings will be stipulated.

Resistance to Fire of Ceilings and Walls

Ceilings and walls, being load-bearing elements, will be classified as per EN 13501-2 as follows:

R load bearing capacity
(capacity to withstand fire exposure on one or both sides without losing the structural ability)

E integrity
(capacity to remain intact in case of fire exposure on one side so fire and hot gas does not penetrate to the other side)

I insulation
(capacity to maintain a non-critical temperature on the unexposed side of the building element)

A ceiling or wall fulfilling all these criteria for e.g. 30 minutes will be classified REI 30. EN 13501-2 allows for the following levels: 10, 15, 20, 30, 45, 60, 90, 120, 180, 240 or 360.

The most common wall and ceiling classifications in Europe are REI 30, REI 90 and REI 120. In some countries, REI 180 and REI 240 are required for certain buildings and constellations.

The European system of fire resistance classifications is a standardization of various existing national classifications for walls and ceilings. We are presently in a transitory phase where both national and European classifications are valid.

In most countries the "national" fire resistance classification is simply expressed in durations, without the letters "REI". In Germany, the fire resistance of ceilings and walls was and still is expressed with the letter "F": F30, F60, F90.

Resistance to Fire of Pipe Penetrations

When installed in a building, all water, sewage, heating, gas, ventilation or electric lines will have to penetrate ceilings and walls with a fire resistance requirement.

However, penetrations through ceilings and walls are only allowed if the fire resistance of the ceiling or wall is not impaired.

Therefore, pipe penetrations must have at least the same fire resistance duration as the ceiling or wall.

Not being load-bearing elements, pipe penetrations will not be classified according to the "R" criterion described on the left. Pipe penetrations will be classified as per:

E integrity

I insulation

A pipe penetration fulfilling both criteria for e.g. 30 minutes will be classified EI 30.

In order to penetrate a fire-rated wall or ceiling, the EI classification of the pipe penetration must have at least the same duration as the required REI classification of the wall or ceiling. E.G. for an REI 30 wall, you can use a EI 30, EI 60, EI 90 or EI 120 pipe penetration.

The penetration seal need not be supplied by the manufacturer of the pipe system. On the contrary, there are manufacturers who have specialized in the supply of insulation seals for certain pipe types (e.g. Rockwool, Doyma, Bis Walraven, BTI, Missel etc.)

Reaction to fire – Fire Resistance

The term „reaction to fire" describes how much heat, smoke etc. a building product contributes to a fire in a room.

The term "fire resistance" indicates how well and how long a building component can hold back the fire and prevent it from penetrating from one room to another.

Note: In general, resistance to fire is not a characteristic of a pipe system. It is a characteristic of a pipe penetration, i.e. a certain way of installing a pipe through a wall or a ceiling, possibly with a special penetration seal.

Testing of the Resistance to Fire of Pipe Penetrations

Throughout Europe, tests for fire resistance of pipe penetrations are based on the test standard EN 1366-3.

Pipes are installed in a furnace, with penetrations through the ceiling and/or the wall of the furnace. With gas or fuel burners, the furnace is heated to a temperature of approx. 1000 °C. The standard requires a certain temperature curve and pressure to be maintained.

The test institute staff control

E integrity
by observation. Flames and smoke may not exit through the pipe penetration.

I insulation
by temperature sensors in defined places on the ceiling and the pipe outside the furnace.
The temperature outside may rise by no more than 180°C peak value and no more than 140°C average value.

duration:
the duration until one or both criteria is no longer within the limits allowed.

The test institute will then issue a test report. With this test report, the manufacturer of the penetration solution can apply for an official approval document.

Approval Documents for Resistance to Fire of Pipe Penetrations

Although all fire tests for pipe penetrations throughout Europe are nowadays based on EN 1366-3, the approval document issued may vary.

National classification and approval systems for fire resistance of pipe penetrations are still widespread. In Germany, penetrations are classified with the letter "R" (R30, R90) and can be used on the basis of approval documents called abP or abZ. In France, the best-known approval document is a so-called "PV". Similar document systems exist in other European countries.

There is also a European approval document for pipe penetrations, the ETA (European Technical Approval). An ETA is the only document that allows a construction product for pipe penetrations to be marked with the "CE" logo. However, a CE logo for penetrations is not yet required.

The transition from national approval documents to the European ETA is very difficult, as the customary national documents vary enormously in content and form. German abP and abZ, for example, are extremely detailed and describe the possibilities of use for a penetration seal in practice with many conditions and limits, whereas a French P.V. only describes the test that was done without detailing the actual application on site.

The required content of an ETA is still under discussion. At present few ETA documents for pipe penetrations exist in Europe, and the work on new ETA is being delayed. Therefore the national documents are still the preferred solution for most specifiers and plumbers.

German MLAR Regulations

Cast iron pipes have been used in buildings for centuries. Building owners, specifiers, plumbers, fire fighters and insurances have a vast positive experience with cast iron pipe installations through fire-rated walls and ceilings.

The "I" criterion for insulation is a relatively new criterion for pipe penetrations. Heat transfer is a normal behaviour for all metal pipes, especially upwards. If an elevated EI rating is officially required, special measures have to be taken to reduce the heat transfer through metal pipe systems. The "I" criterion was introduced because of the consideration that excessive heat that is transferred to the unexposed side of a wall or ceiling might ignite combustible materials, e.g. a plastic pipe, that are in proximity.

However, this phenomenon of a cast iron pipe igniting a neighbouring plastic pipe only through heat transfer, has never been documented in actual structure fires.

Based on this experience, the German national building code for pipe and cable installations MLAR defines situations where the heat transfer through metal pipes can be ignored. On some of these solutions, the MLAR prescribes certain distances to combustible installations for added safety. For the solutions on this page no approval document is required.

On all these solutions, it is only necessary to fill the gap between the pipe and the wall/ceiling with a non-combustible material as follows:

- mineral wool, fusion temperature min. 1,000 °C; stuffed by hand with approx. 90 kg/m³, or by laying a mineral wool mattress or shell around the pipe. We recommend a layer thickness of approx. 2 cm. Supplier e.g. Rockwool.
- intumescent material, i.e. a material that multiplies its volume rapidly in case of a fire. Supplier e.g. Missel.
- the remaining gap between mineral wool or intumescent material and the wall/ceiling must be closed with cement mortar, concrete or gypsum.
- cement mortar, concrete or gypsum can also be used without mineral wool or intumescent material. However, this is normally not recommendable for acoustic protection reasons.

MLAR Pipe penetrations through walls up to REI 30 for all pipe diameters

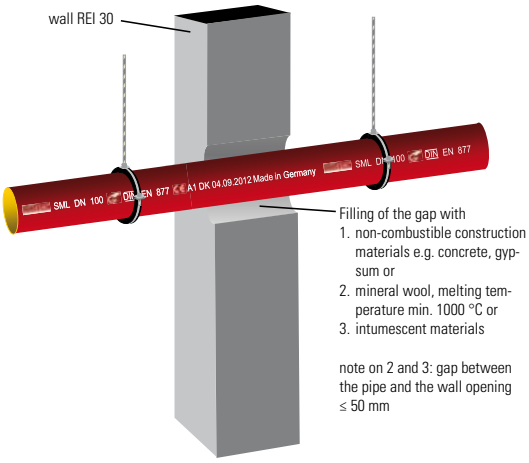

No minimum distances to other pipe installations are defined for this solution.

MLAR Pipe penetrations through walls up to REI 90 DN 50 – DN 150

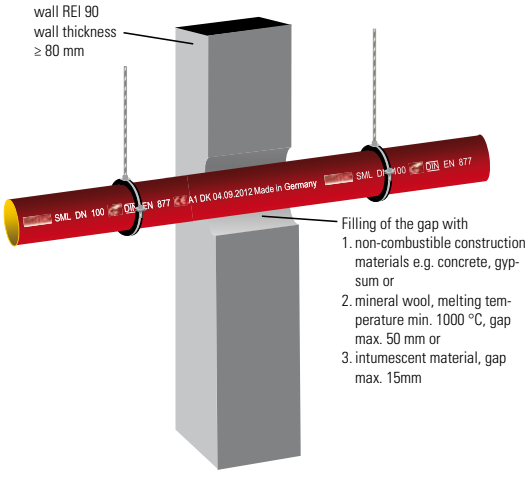

MLAR Pipe penetrations through ceilings up to REI 90 DN 50 – DN 150

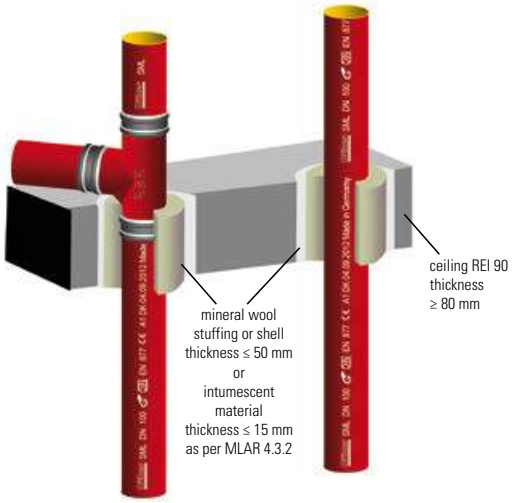

Minimum distance to water/heating pipelines:

For the MLAR REI 90 solutions for wall or ceiling, if a water or heating pipeline is to be installed parallel close by, we recommend the following solution:

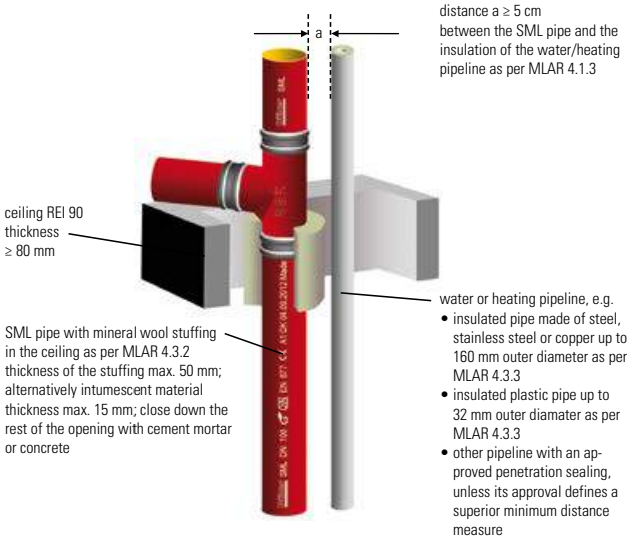

Please consider a 5 cm distance to non-combustible pipes or other pipes with non-combustible insulation on at least 50 cm length.

For other pipes without insulation or with combustible insulation, please consider the outside diameter of the cast iron pipe as the minimum distance.

APPROVED SOLUTIONS

Solutions with Approval Documents

The following penetration seals have been tested against EN 1366-3 and have received an approval document for EI 30. Approved solutions prevent not only the spreading of fire, but also any heat transfer that surpasses the prescribed limits.

Approved Solution for Walls up to REI 90 (example)

Rockwool 800 / Rockwool Klimarock
EI 90 for SML DN 50 up to DN 300
German approval abP P-3725/4130-MPA

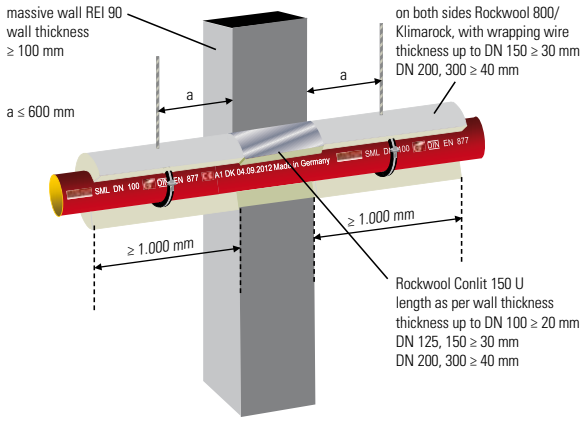

Distances to other Rockwool approvals: no minimum distance required.

Approved Solutions for Ceilings up to REI 90 (examples)

Rockwool Conlit and Klimarock
EI 90 for SML DN 50 up to DN 150
German approval abP P-3725/4130-MPA BS

annex 12

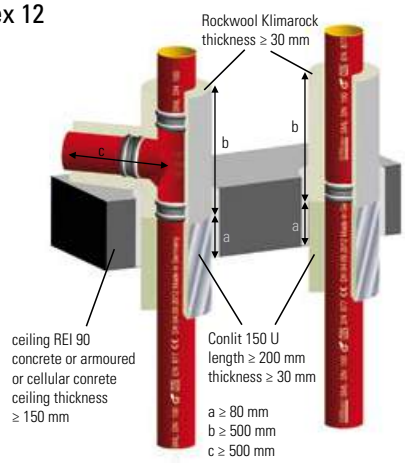

annex 13

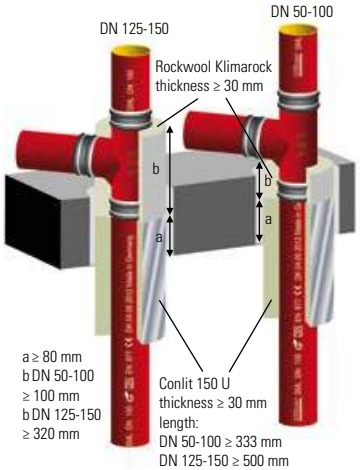

Distances to other Rockwool approvals: no minimum distance required.

These penetration seals can be installed in a tapping drill hole of the correct size without applying concrete or mortar. In larger openings, the remaining gap between the mineral wool and the wall/ceiling needs to be closed down with concrete or cement mortar.

The Special Case of Mixed Installations

For building drainage in Germany and other European countries, plumbers sometimes apply so-called mixed installations: cast iron down pipes, and plastic horizontal connecting pipes.

Although there are no discernible technical advantages to this material combination, there is a strong preference for this kind of installation particularly in blocks of flats and similar buildings in Germany.

However, German authorities have recognized that this combination of combustible and non-combustible materials in one drainage pipe installation shows particular risks in case of a fire, with the plastic pipes being the weakest "chain link". When installed with the fire penetration seals that are approved for cast iron pipe installations, the insufficient heat resistance of the plastic pipes may cause a fire flashover.

Therefore, since 2013, specially approved penetration seal solutions need to be installed on mixed installations in Germany.

What is a Mixed Installation?

Typical mixed installation –
special penetration seal required in Germany
(see following pages)
Down pipe and branch in the downpipe made of cast iron
plastic pipe connected direct to the branch

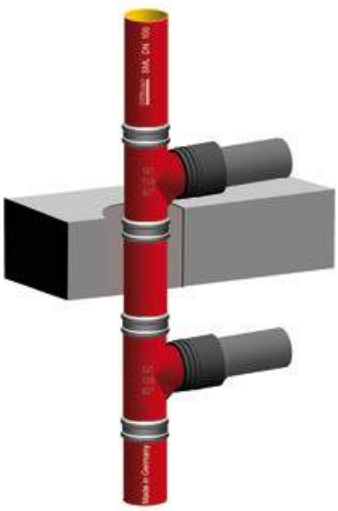

No typical mixed installation
Normal solutions of pages 24 to 26 can be applied
min. 50 cm cast iron in the horizontal line

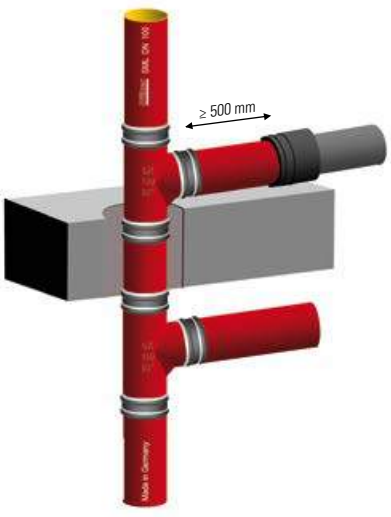

MIXED INSTALLATION

German Approved Solutions for Mixed Installation

All solutions that were developed for mixed installations are based on the usual fire protection collar for plastic pipes, with intumescent material that, when heated, closes the pipe diameter down and therefore provides a thermal insulation. The intumescent material may be installed so it closes down the downpipe below the ceiling, thus protecting the whole installation above the ceiling from excessive heat; or it may only close down the horizontal plastic pipe, thus preventing a fire but requiring installation behind at least a gypsum wall to protect the room from the heat.

Although fire protection is much easier on pure cast iron installations, and although we do not recommend mixed installations, we will show you some approved fire protection solutions for mixed installations in the following:

Düker Fire Protection Coupling BSV 90

EI90 for vertical ceiling penetrations of mixed installations
cast iron pipe DN 80 up to DN 150
German approval abZ DIBt Z.19.17-1893
French PV 14-A-082 for EI 240
European classification document EI 90 available

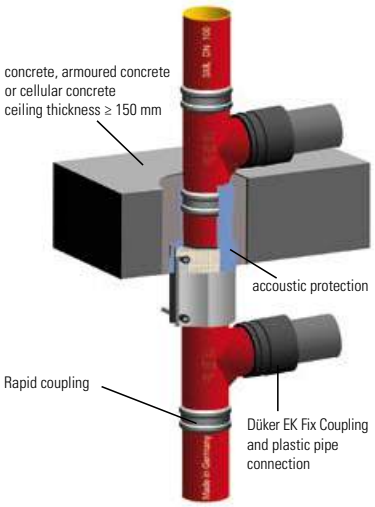

Inside the coupling, the cast iron pipeline is interrupted by a plastic collar. Around that collar, the coupling contains intumescent material, which increases its volume enormously when subjected to heat.

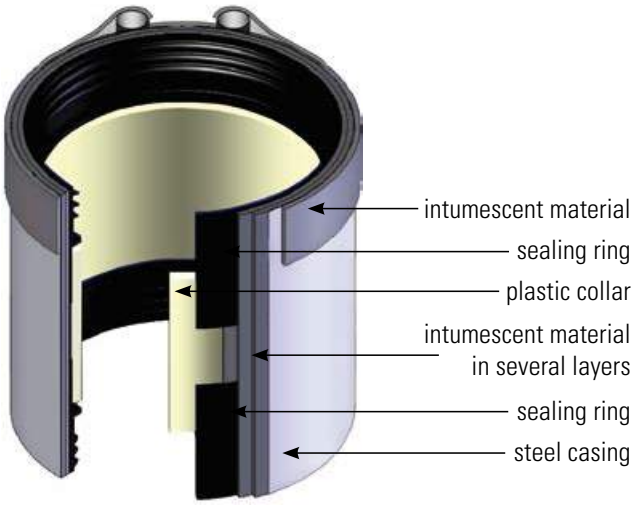

In case of a fire, the heat transmitted through the cast iron pipeline makes the plastic melt away and at the same time makes the intumescent material expand, so the pipe diameter is closed down. The expanded material ensures thermal insulation – and therefore prevents excessive heat transmission - and prevents any possible chimney effect.

Another strip of intumescent material on the outside of the coupling closes down the gap between the pipe and the wall perforation, so a standard combustible PE noise insulation of up to 5 mm thickness can be used.

The Düker fire protection coupling, thanks to its inferior outside diameter and height, hardly impairs the pipeline shape. A branch above the ceiling can be placed just as low as if there was no fire-rated sealing.

The BSV 90 must be installed below the ceiling, with the upper 20 to 40 mm protruding into the ceiling.

Please note: although the BSV 90 was developed for typical mixed installations, it can also be used for pure cast iron installations. However, for pure cast iron installations we recommend the simpler solutions shown on pages 24 to 26.

For installation instructions, please consult www.dueker.de.

A film on the installation is to be found here: www.dueker.de/film

Doyma Curaflam® Konfix Pro

EI90 for vertical ceiling perforations with mixed installations
cast iron pipe up to DN 150
connecting pipe DN 50 up to DN 100
German approval abZ DIBt Z.19.17-2074

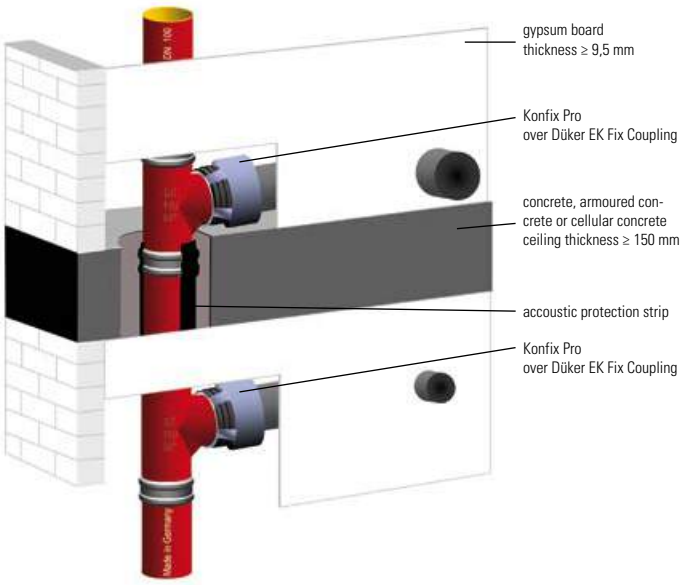

Rockwool

EI 90 for vertical ceiling perforations with mixed installations
cast iron pipe up to DN 150
connecting pipe up to DN 100
German approval abZ DIBt Z.19.17-2084

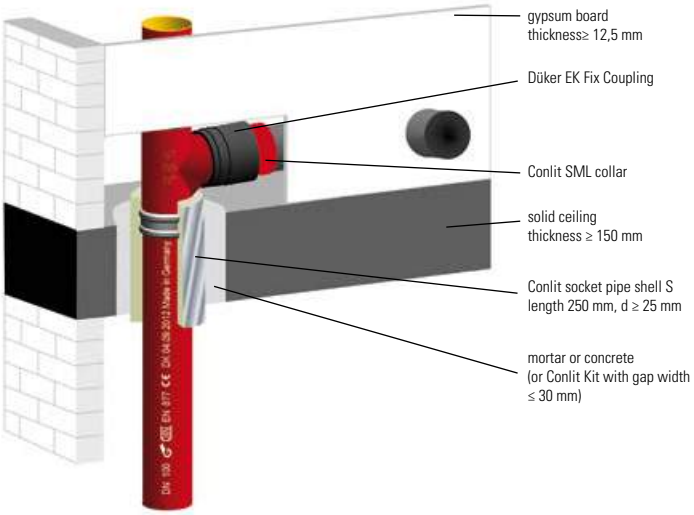

PIPELINES INSTALLED IN ESCAPE AND EMERGENCY ROUTES

Pipelines within Escape and Emergency Routes

The national building codes will also provide for escape and emergency routes within buildings. For example, German MBO says that the installation of pipes and cables within escape and emergency routes is only admissible if the use of the relevant gangways or stairways in case of a fire is possible for a sufficient length of time.

The same MBO allows for cast iron drainage pipe installations to be installed without any cladding or insulation in escape routes. It is also admissible that connections and sealants consist of combustible materials (e.g. rubber), and combustible pipe coatings up to 0.5 mm thickness are allowed. All Düker cast iron drainage pipe systems are covered by these clauses.

If insulations are used, they must be of non-combustible material. The fixing of pipelines to the wall or ceiling must be carried out with metal plugs.

For comparison: combustible pipes must be installed behind claddings such as plastered installation slits, false ceilings, false floors or similar.

Penetrations through Walls of Escape and Emergency Routes

On principle all solutions of the previous pages may be used if the fire resistance is sufficient. Below please find an example as per German MLAR regulations (see page 24)

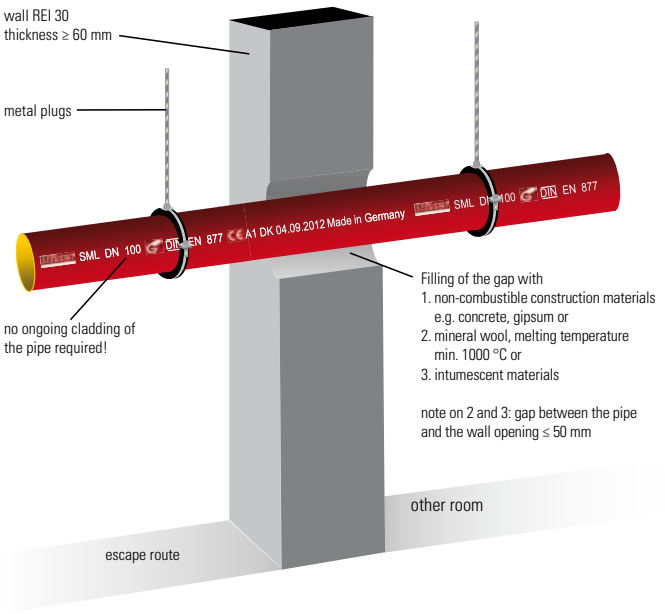

Acoustic Protection

TEST CERTIFICATE

Düker Cast Iron Pipe Systems and Acoustic Protection

Annex F of EN 877 says:
Cast iron pipe systems due to their high mass per unit area of their pipe walls as well as the joint design characteristics provide considerable noise reduction benefits when evacuating waste water within buildings. As a rule additional protection is therefore not required.

Levels of Acoustic Protection

German standards define the maximum admissible noise level from water and waste water installations as follows:

- up to 30 dB(A) in living rooms and bedrooms
- up to 35 dB(A) in classrooms and workrooms

note: these values apply only to neighbouring apartments, never to the apartment where the noise originates.

This standard noise protection should be no problem for correctly installed SML pipe systems. In order to observe elevated sound damping requirements, e.g. 5 dB(A) lower than the standard values, the whole building structure should be checked. The actual noise level will depend largely on correct installation, but also on the water quantities and on the density of walls and ceilings. However, cast iron drainage pipes are at present the drainage pipes best suited for noise-damping.

Test Certificates

Up-to-date noise level tests for drainage pipes should be based on EN 14366 2005-02 "Laboratory measurement of noise from waste water installations".


Fraunhofer

Test report P-BA 214/2010e

Determination of the Acoustic Performance of a Wastewater Installation System in the Laboratory

This standard fixes the procedures for the laboratory measurement of airborne and structure-borne sound caused by waste water and rain water installations. The standard is applicable to waste water pipelines systems and their components, but not to the waste water sources (WCs, bathtubs etc.). The pipelines may be of all commonly used materials and diameters. The results can be used for the comparison of products and materials and for an estimation of the behaviour of waste water systems in a building under certain circumstances.

The standard EN 14366 gives details on the construction of the pipeline: a vertical stack over three storeys, fixed to a wall with a surface weight of 220 kg/m². In every storey, a branch is installed in the stack, and usually closed with a plug. Below the basement, there is a change of direction to a horizontal line. The pipeline must be fixed as per the state of the art; the ceiling perforations must be closed. The measurement is made with flow rates of 0.5, 1.0, 2.0 and 4.0 l/s.

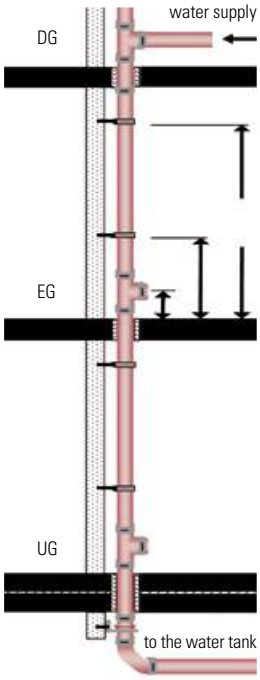

Test certificates as per EN 14366 state various noise levels. While in Germany the installation sound level LIn measured in the rear of the lower storey as per DIN 4109 is the only value that is of any real interest, the European standard EN 14366 gives two separate values for airborne sound and structure-born sound. Airborne sound is measured in the room where the pipeline is installed, structure-born sound is measured on the other side of the wall to which the pipeline is fixed.

With certificate No. P-BA 214/2010 of January 2011, the Fraunhofer Institute in Stuttgart tested the Düker SML drainage pipe system with various pipe bracket systems.

	Airborne sound pressure level		Structure-born sound characteristic level	
Flow rate	2.0 l/s	4.0 l/s	2.0 l/s	4.0 l/s
pipe brackets with rubber insert	45 dB(A)	48 dB(A)	19 dB(A)	24 dB(A)
pipe brackets with acoustic decoupler	44 dB(A)	48 dB(A)	<10 dB(A)	11 dB(A)

At 2.0 l/s - this corresponds more or less to a toilet flush - Düker SML with optimum fixing technology is below 10 dB(A), that is **quieter than falling snow!**

Measures to Obtain or Improve the Acoustic Protection

Structure-borne sound

In order to avoid structure-born sound, contact to the masonry must be avoided:

- the pipe system should not touch walls or ceilings at any point. Wall or ceiling penetrations should be closed with non-combustible mineral wool. Shafts should be stuffed with mineral wool or be lined with noise-absorbing material.
- fixing brackets should be rubber-lined. When closing the brackets, the rubber lining should not be pressed too tightly to the pipe. Plastic spacers between the two bracket halves may help reduce the pressure.
- in very sensitive areas, it may be advisable to use special noise-damping fixing brackets; e.g. the acoustic decoupler
- in vertical pipes, down pipe supports should not be spaced too far apart in order to avoid too high pressure on the rubber ring.

Airborne sound

The water flow in the pipes must be eased to reduce flow noises:

- the transition from a down pipe of a height of 10 m or more to a horizontal pipe should be carried out using using flow-calming bends with steadying distance
- sideways offsets of a down pipe must also be carried out with bends with steadying distance, both above and below
- the connection of a down pipe to a horizontal line must be carried out with 45° branch and 45° bend
- the connection of a horizontal pipe to a down pipe should be carried out with 88° branch with 45° access angle.

Installation in a sensitive room:

- as per German DIN regulations, drainage pipes may not be installed openly on the walls of a sensititive room such as living rooms, bedrooms, workrooms etc.

- in case of installation between the ceiling and a suspended ceiling, the suspended ceiling should be sealed, e.g. gypsum cardboard with sealed seams and mineral wool. Alternatively, the drainage pipeline may be covered, e.g. with a casing made of gypsum cardboard and mineral wool.

Fixing and Noise Protection

The choice of the pipe bracketing can be decisive for noise protection. For SML, standard pipe brackets with rubber inserts are sufficient in most cases.

Acoustic Decoupler

In order to observe increased noise protection requirements, it may be advisable to use the acoustic decoupler together with pipe brackets without rubber insert. The decoupler is screwed between two short threaded bars M8 or M10 between the pipe bracket and the wall/ceiling. Its special construction ensures an effective decoupling from structure-born sound. It is suitable for vertical or suspended horizontal Düker SML pipes (suspended from the ceiling or from a mounting console) in DN 50 up to DN 150. In case of horizontal pipelines, an acoustic decoupler can carry max. 1000 N, in case of vertical lines max. 400 N. Superiour weights must be compensated for with down pipe supports, grip collars etc.

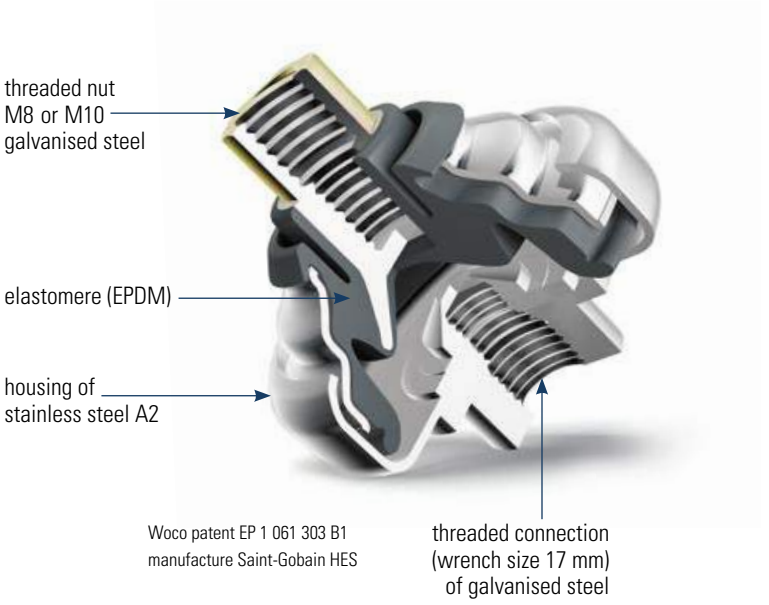

The acoustic decoupler can face the bracket with any of its two sides.



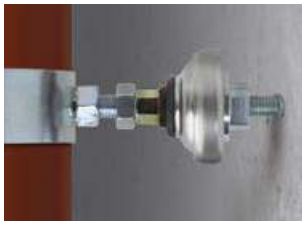

MEASURES, ACOUSTIC DECOUPLER

Vertical Installation

- pipelines DN 40 up to DN 150
- on a length of 3 m you require 2 acoustic decouplers
- the maximum charge F_{vert} per decoupler is 400 N

Horizontal Installation

- pipelines DN 40 up to DN 150
- on a length of 3m you require 2 acoustic decouplers
- the pipelines must be suspended either from the ceiling or from a console. A fixing direct to a wall is not admissible
- the maximum charge F_{hor} per decoupler is 1,000 N

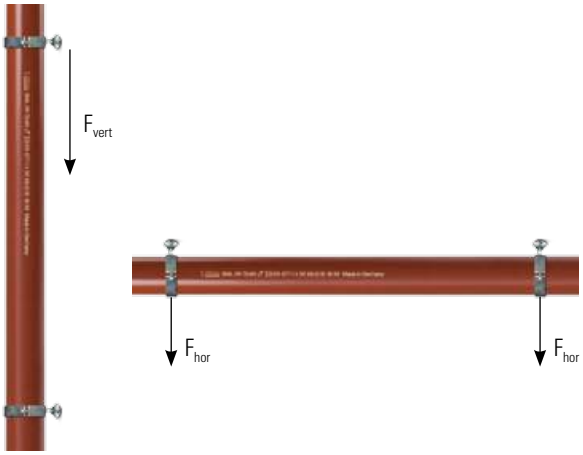

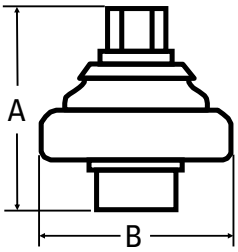

DN	A	B	kg	item no.
50 – 150	48	49	0,1	239681

both sides internal thread M10 and M8
wrench sizes 13 or 17



01 SML Delivery Programme



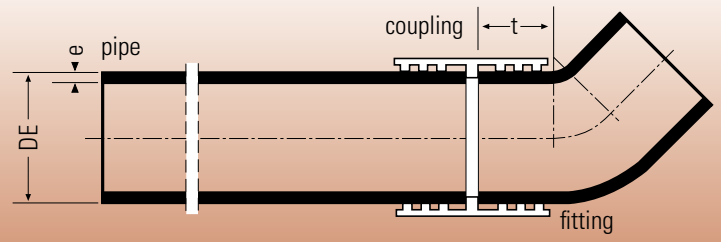

Construction dimensions:
Pipe diameter
Wall thicknesses
Insertion lengths (sealing zone)
Pipe weights
Surface

SML pipes and SML fittings (EN 877 and DIN 19 522)

nominal diameter	exterior diameter		wall thickness pipes and fittings		insertion length (sealing zone)	admissible interior pressure		pipe weight empty	pipe weight full	surface ca. m²
DN	DE	tolerance	nominal	minimum	t	pipes up to	fittings*** up to	ca. kg/m	ca.kg/m	per m
40**	48	+2/-1	3,0	2,5	30	10 bar	10 bar	3,5	4,9	0,15
50	58	+2/-1	3,5	3,0	30	10 bar	10 bar	5,3	7,3	0,18
70*	78	+2/-1	3,5	3,0	35	10 bar	10 bar	6,2	10,2	0,26
80[1)]	83	+2/-1	3,5	3,0	35	10 bar	10 bar	6,6	11,0	0,26
100	110	+2/-1	3,5	3,0	40	10 bar	10 bar	8,5	16,8	0,35
125	135	+2/-2	4,0	3,5	45	10 bar	10 bar	11,6	24,3	0,42
150	160	+2/-2	4,0	3,5	50	10 bar	5 bar	14,0	32,2	0,50
200	210	+2,5/-2,5	5,0	4,0	60	10 bar	5 bar	23,8	55,3	0,65
250	274	+2,5/-2,5	5,5	4,5	70	10 bar	3 bar	32,1	86,4	0,85
300	326	+2,5/-2,5	6,0	5,0	80	10 bar	3 bar	45,1	122,5	1,02
400	429	+2/-3	6,3	5,0	80	10 bar	2 bar	64,1	200,3	1,35
500**	532	+2,0/-3,5	7,0	5,2	80	6 bar	2 bar	83,3	294,5	1,67
600**	635	+2,0/-4,0	7,7	5,8	80	4 bar	2 bar	108,5	410,0	1,99

* obsolete model, ** on request (DN 500 and 600 see MLB programme), *** except inspection pipes, siphons, hermetic plugs and connection pieces

All dimensions in mm

[1)]) The nominal diameter DN 80 with a minimum interior diameter of 75 mm corresponds to DN 80 as per EN 12056-2 as well as to DN 75 as per EN 877 (product standard)

SML Pipes

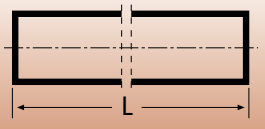

SML pipe DIN 19522

L = 3000 mm

DN	kg	item no.
50	15,8	660004
70*	18,7	660094
80	19,8	235145
100	25,4	660184
125	34,8	660274
150	42,1	660364
200	71,5	660454
250	96,3	660654
300	135,3	660664
400	192,2	660604
500**		
600**		

* obsolete model, ** on request (see MLB programme)

For CAD drawings 2D and 3D (dxf and VDI 3805 format) please consult www.dueker.de/vdi3805

see also page 102.

Reducers

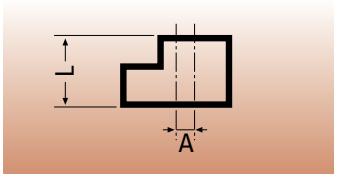

SML reducer DIN 19522				
DN	A	L	kg	item no.
70 x 50*	10	75	0,5	662504
80 x 50	12,5	80	0,7	235159
100 x 50	25	80	0,9	662514
100 x 70*	16	85	0,9	662524
100 x 80	13,5	90	1,0	235161
125 x 50	38,5	85	1,4	662534
125 x 70*	28,5	90	1,5	662544
125 x 80	26	95	1,7	235162
125 x 100	12,5	95	1,5	662554
150 x 50	51	95	2,0	662564
150 x 70*	41	100	2,1	662574
150 x 80	37,5	100	2,0	235417
150 x 100	25	105	2,2	662584
150 x 125	12,5	110	2,2	662594
200 x 100	50	115	4,1	662604
200 x 125	37,5	120	4,1	662614
200 x 150	25	125	4,3	662624
250 x 150	57	140	6,8	662634
250 x 200	32	145	7,0	662644
300 x 150	83	150	10,7	662494
300 x 200	58	160	11,4	662714
300 x 250	26	170	12,4	662724
400 x 300**	51,5	180	15,1	662444

* obsolete model, ** on request

SML Down Pipe Supports

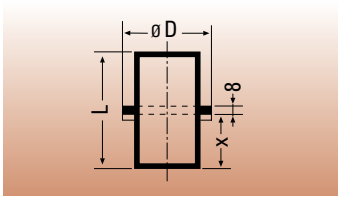

Installation Example with Console (available in the trade)

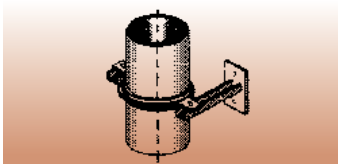

SML down pipe support DIN 19522						
DN	D	X	L	kg	item no.	
				support without bearing ring	support without bearing ring	support incl. bearing ring
50	87	96	200	1,3	661544	223825
70*	106	96	200	1,6	661554	223830
80	114	96	200	1,8	235164	235343
100	145	96	200	2,3	661564	223834
125	170	96	200	3,3	661574	223839
150	195	96	200	4,0	661584	223841
200	245	96	200	6,2	661594	223843
250	340	146	300	14,0	100242	230053
300	390	146	300	19,1	100244	230054

* obsolete model

Bearing Rings

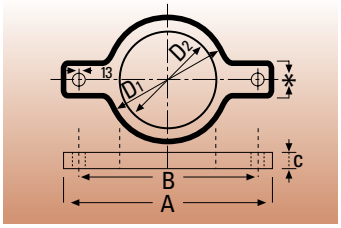

Bearing rings with rubber for down pipe supports

DN	D_2	D_1	A	B	C	*	kg	item no.
50	61	93	193	148	25	33	0,8	666314
70*	81,5	114	214	166	26	33	1,0	666324
80	86,5	120	214	166	31	32	1,0	235344
100	115	147	250	202	28	33	1,3	666334
125	138	171	275	225,5	28	33	1,5	666344
150	163	199	301	253,5	30	33	2,0	666354
200	215	250	360	310,5	30	36	3,3	666374
250	280	344	442	392	34	40	7,5	227152
300	332	393	495	445	39	40	9,5	227153

* obsolete model

SML Bends 88°

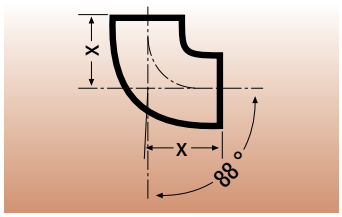

SML bend DIN 19522			
DN	X	kg	item no.
50	75	0,7	661054
70*	90	1,1	661114
80	95	1,2	235150
100	110	2,1	661174
125	125	3,2	661234
150	145	4,9	661294
200	180	8,8	662784
250**	225	15,5	233621
300**	260	25,5	233622

SML Bends 68°

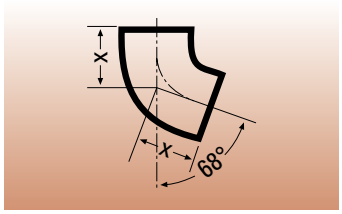

DN	X	kg	item no.
50	65	0,7	661034
70*	75	1,1	661094
80	80	1,2	235149
100	90	1,9	661154
125	105	2,9	661214
150	120	4,3	661274
200	145	7,7	661334

SML Bends 45°

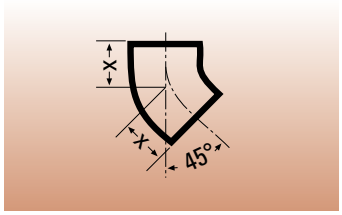

DN	X	kg	item no.
50	50	0,5	661024
70*	60	0,9	661084
80	60	0,9	235148
100	70	1,5	661144
125	80	2,3	661204
150	90	3,5	661264
200	110	5,5	661324
250	130	10,3	661374
300	155	17,3	661394
400**	257	36,0	661284

SML Bends 30°

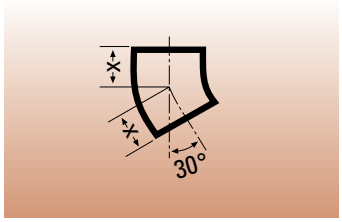

DN	X	kg	item no.
50	45	0,5	661014
70*	50	0,7	661074
80	60	0,9	235147
100	60	1,3	661134
125	70	2,0	661194
150	80	3,0	661254
200	95	5,4	661314
250	110	9,1	661364
300	130	14,7	661384

SML Bends 15°

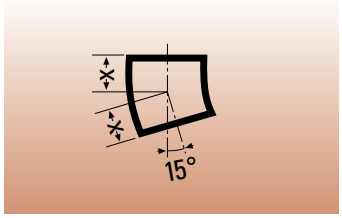

DN	X	kg	item no.
50	40	0,4	661004
70*	45	0,6	661064
80	50	0,7	235146
100	50	1,0	661124
125	60	1,7	661184
150	65	2,5	661244
200	80	4,6	661304

* obsolete model, ** on request

SML Bends 88°
with 250 mm spigot

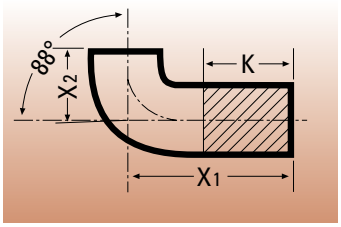

SML bend with long spigot 88° DIN 19522					
DN	X_1	X_2	K**	kg	item no.
70*	250	90	160	2,8	662064
80	250	95	155	2,6	236348
100	250	110	140	3,5	662084

* obsolete model, ** dimension for maximum cut-back

SML Bends 45°
with 250 mm spigot

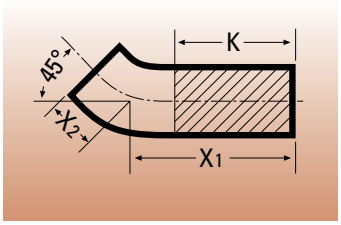

SML bend with long spigot 45° DIN 19522					
DN	X_1	X_2	K**	kg	item no.
70*	250	60	190	2,6	662054
80	250	60	190	2,5	236347
100	250	70	180	4,2	662074

* obsolete model, ** dimension for maximum cut-back

SML Double Bends 88°
from 2 bends 44°

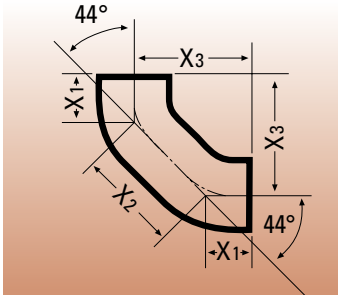

SML double bend 88° DIN 19522						
DN	X_1	X_2	X_3	kg	item no.
50	50	100	121	1,2	661484
70*	60	120	145	1,8	661494
80	60	120	145	1,8	235151
100	70	140	170	3,2	661504
125	80	160	195	4,6	661514
150	90	180	219	7,0	661524

* obsolete model

As per German DIN 1986, turns of base and collecting pipes may only be carried out with pre-manufactured bends. Each single bend may only have 45°.

Normally, two bends 45° must be installed for this case. With the double bend, one coupling is no longer necessary and installation is simplified. Furthermore, this fitting offers the possibility of fixing a bracket in the middle.

The bend is also suitable for transition from a down pipe to a horizontal pipe and vice versa.

SML Flow-calming Bends 88°
with 250 mm steadying distance for adapting down pipes to draft pipes

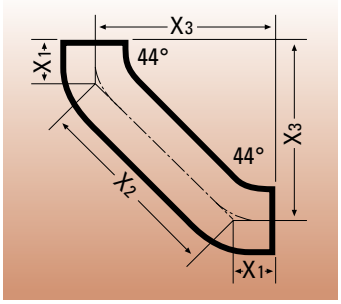

SML flow-calming bend 88° DIN 19522						
DN	X_1	X_2	X_3	kg	item no.
70*	60	301	273	3,2	662734
80	60	301	273	3,4	236349
100	70	312	291	4,8	662744
125	80	322	308	6,8	662754
150	90	334	326	9,6	662764

* obsolete model

German DIN 1986 says that for down pipes running through four to eight storeys or with a length of 10 to 22 m, special arrangements must be taken. Supply and running bend of a draft pipe are to be resolved with a separator of 250 mm length.

SML Bends 135°
for ventilation

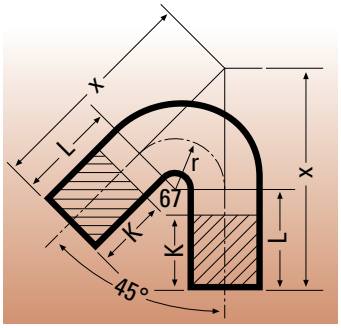

SML bend 135° for ventilation DIN 19522

DN	X	K**	L	kg	item no.
100	312	100	150	5,0	662774

** dimensions for maximum cut-back

Combination Examples
branch 45° - bend 135°

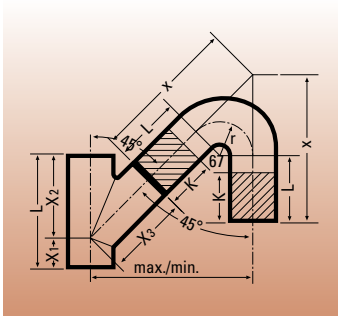

Combinations of SML branches 45° and SML bends 135° for bypasses

DN	max.	min.
100 x 100	370	300
125 x 100	380	310
150 x 100	395	325
200 x 100	410	340

German DIN 1986-100 requires bypass lines for ventilation purposes in the following cases:
- down pipes over 10 m height with a sideways offset of more than 2m
- down pipes over 22 m height at any offsets and at the transition into a horizontal line

The upper connection between the bypass and the downpipe is executed with a 135° bend.

SML Short Radius Access Bends 88°

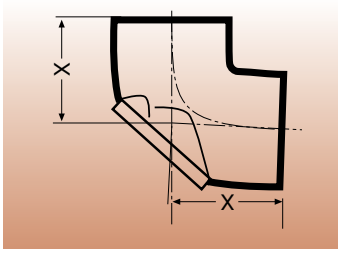

SML short radius access bend 88°

DN	X	kg	item no.
100	110	3,3	100268
150	145	6,1	232741

SML Long Radius Bends 88°
with/without access

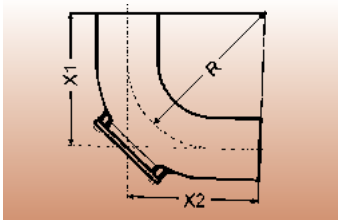

SML long radius bend 88°

DN	X1	X2	R	kg with access	kg without access	item no. with access	item no. without access
100	230	230	150	6,5	5,1	100262	235125
150	245	245	150	-	7,8	-	235126

SML Bends 88°
with vent

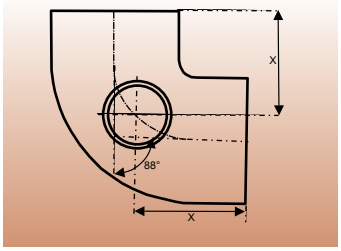

SML bend with vent 88°

DN	X	kg	item no.
100 x 50	91	2,2	232445

Combination Examples
branch 45° - bend 45°

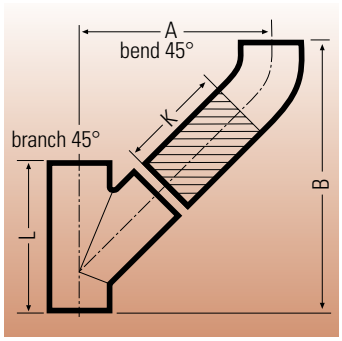

Combinations of SML bends and SML branches (bend with 250 mm spigot)

branch 45° DN	bend 45° DN	A max.	A min.	B max.	B min.	L	K*
70 x 70	70	283	149	398	264	200	190
80 x 80	80	293	159	418	284	225	190
100 x 70	70	301	166	406	271	215	190
100 x 80	80	304	170	419	285	230	190
100 x 100	100	315	187	455	327	260	180
125 x 70	70	311	177	411	277	225	190
125 x 80	80	322	187	422	287	240	190
125 x 100	100	329	202	459	332	270	180

* Dimension for maximum cut-back

The reducing quotient 1:1.5 in site praxis is also permitted here. When decreasing the distances A and B by 1 cm (both change at the same time), the bend must be cut back by 1.5 cm.

Combination Examples
branch 45° - bend 45°

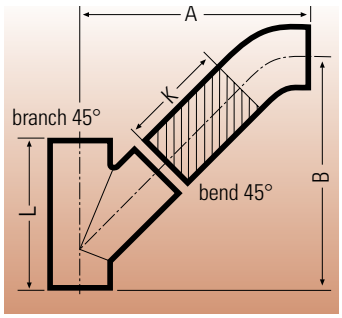

Combinations of SML bends and SML branches (bend with 250 mm spigot)

branch 45° DN	bend 45° DN	A max.	A min.	B max.	B min.	L	K*
70 x70	70	343	209	338	204	200	190
80 x 80	80	353	219	358	224	225	190
100 x 70	70	361	226	346	212	215	190
100 x 80	80	364	230	359	225	230	190
100 x 100	100	385	257	385	257	260	180
125 x 70	70	371	237	351	217	225	190
125 x 80	80	382	247	362	227	240	190
125 x 100	100	399	272	389	262	270	180

Combination Examples
branch 88° - bend 88°

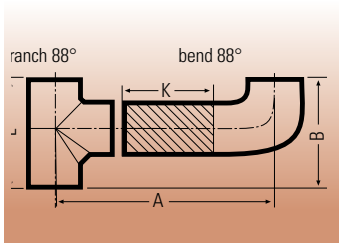

branch 88° DN	bend 88° DN	A max.	A min.	B	L	K*
70 x 70	70	350	190	187	180	160
80 x 80	80	350	195	197	180	155
100 x 80	80	365	210	207	190	155
100 x 100	100	370	230	225	220	140
125 x 80	80	380	225	213	205	155
125 x 100	100	385	245	235	235	140

* Dimension for maximum cut-back

In this case, the reducing quotient is 1:1. The distance A changes identically to the reduction of the bend. Dimensional tolerances for distance B which theoretically result from the descent are unimportant for installation practice.

SML Bends 88°
with high heel

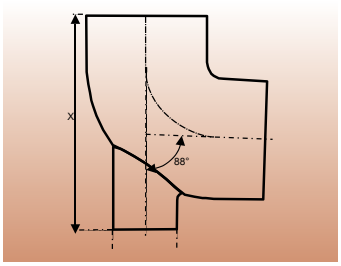

SML bend with high heel 88°				
DN	X	A	kg	item no.
100 x 50	195	58	2,4	235529

SML S-Bends
offset = 65 mm

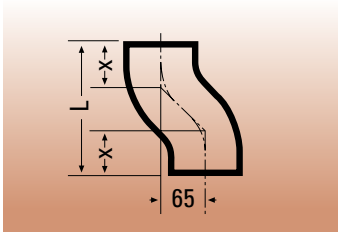

SML S-bend 65 mm DIN 19522				
DN	X	L	kg	item no.
100	70	205	2,5	662864

SML S-Bends
offset = 130 mm

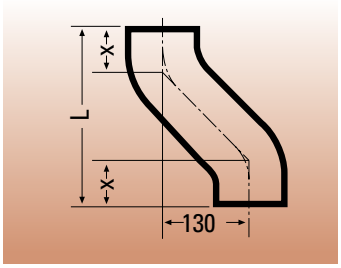

SML S-bend 65 mm DIN 19522				
DN	X	L	kg	item no.
100	70	270	3,4	662874

SML S-Bends
offset = 200 mm

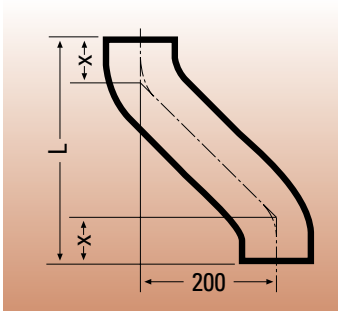

SML S-bend 65 mm DIN 19522				
DN	X	L	kg	item no.
100	70	340	4,4	662884

SML S-Bends
made of 2 SML bends 15°

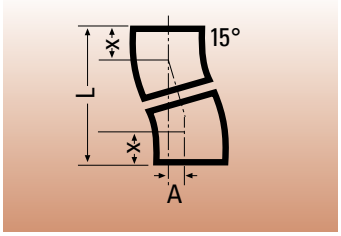

Fitting/bend combinations			
DN	X	A	L
50	40	27	162
70	50	26	197
80	50	26	197
100	50	27	201
125	60	32	241
150	65	35	260
200	80	43	319

SML S-Bends
made of 2 SML bends 30°

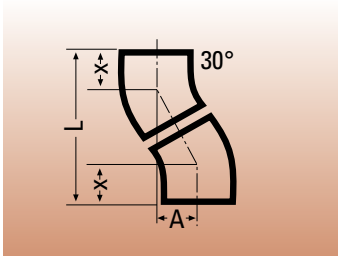

Fitting/bend combination

DN	X	A	L
50	45	48	172
70	60	60	224
80	60	60	224
100	60	63	228
125	70	73	266
150	80	83	303
200	95	98	359
250	110	113	415
300	130	133	489

SML S-Bends
made of 2 SML bends 45°

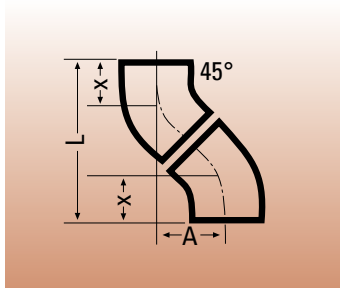

DN	X	A	L
50	50	74	174
70	60	85	205
80	60	85	205
100	70	103	243
125	80	117	277
150	90	131	311
200	110	159	379
250	130	187	447
300	155	223	533

SML S-Bends
made of 2 SML bends 45°
with 250 mm spigots

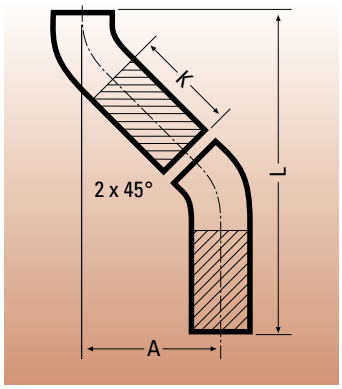

Bend combinations

DN	A max.	A min.	L max.	L min.	K*
70	223	88	533	398	190
80	223	88	533	398	190
100	230	103	550	423	180

* Dimension for maximum cut-back

Bends with 250 mm spigots can be reduced by the K-dimension at the most. This allows optimum adaptation of the pipes to the structure. A reducing quotient of 1:1.5 can be used in site practice for 45° bends. This means: for a decrease of the distance dimensions A and L by 1 cm, the diagonally running longer spigot is to be shortened by 1.5 cm. In the above chart, 5 mm were added for the distance of the coupling. Because of the simple calculation method we dispense with the illustration of the three further combination possibilities of these bends (long spigots with long, short with short or one long spigot above).

Deviation
made of 2 SML bends 45°
with 250 mm spigots

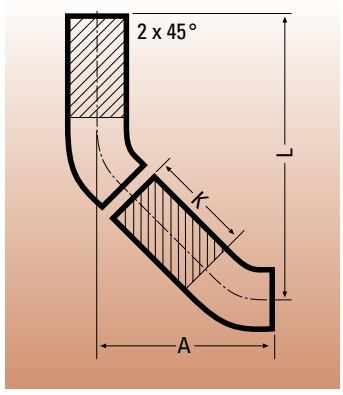

Bend combinations

DN	A max.	A min.	L max.	L min.	K*
70	283	148	473	338	190
80	283	148	473	338	190
100	300	173	480	353	180

* Dimension for maximum cut-back

Due to cut-back possibilities, even the deviation made of 2 SML bends 45° with 250 mm spigots shown here allows good adaptation of the pipes to the structure. Reducing quotient as in the previous example 1:1.5. This also is only one example out of 4 different combination possibilities.

These combinations equal a hydraulically favourable and installation-friendly pipe direction with all deviations: vertical-horizontal, horizontal-vertical and horizontal-horizontal. The overall lengths "L" can also be lessened by cutting back the long supplying or draining spigots.

SML Branches 45°

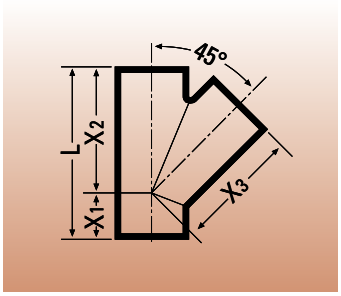

The introduction of the German standard DIN 15922: 2000-01 (supplement to EN 877) led to dimensional changes on some fittings such as branches 45°, double branches and corner branches. Such fittings of older manufacture may therefore deviate from the dimensions stated in this document.

SML single branch 45° DIN 19522

DN	X_1	X_2	X_3	L	kg	item no.
50 x 50	50	135	135	185)	1,4	663004
70 x 50*	40	150	150	190	1,6	663034
80 x 50	50	140	140	190	1,7	235152
70 x 70*	55	160	160	215	2,3	663064
80 x 80	65	160	160	225	2,4	235154
100 x 50	35	165	165	200	2,5	663094
100 x 70*	50	185	185	235	3,3	663124
100 x 80	55	175	175	230	3,3	235156
100 x 100	70	205	205	275	4,2	663154
125 x 50	20	185	185	205	3,4	663184
125 x 70*	40	200	200	240	4,3	663214
125 x 80	40	200	200	240	3,6	235342
125 x 100	60	220	220	280	5,2	663244
125 x 125	80	240	240	320	6,4	663274
150 x 70*	30	215	215	245	5,6	663334
150 x 80	40	215	215	260	5,2	235415
150 x 100	55	240	240	295	6,8	663364
150 x 125	70	255	255	325	8,0	663394
150 x 150	90	265	265	355	9,2	663424
200 x 70*	15	240	240	255	8,1	663484
200 x 80	20	240	240	260	8,5	235416
200 x 100	40	265	265	305	10,0	663514
200 x 125	55	280	280	335	11,9	663544
200 x 150	75	300	300	375	13,3	663574
200 x 200	115	340	340	455	17,2	663604
250 x 100	15	310	310	325	15,4	663634
250 x 125	35	335	335	370	17,7	664504
250 x 150	55	350	350	405	20,2	664514
250 x 200	90	385	385	475	25,1	663644
250 x 250	130	430	430	560	31,5	663654
300 x 100	5	345	345	350	19,0	663664
300 x 125	15	360	360	375	22,2	664524
300 x 150	35	380	380	415	23,0	664534
300 x 200	70	415	440	485	34,0	664444
300 x 250	115	465	465	580	42,1	663674
300 x 300	155	505	505	660	50,1	663684
400 x 300**	105	555	565	660	60,0	663694

* obsolete model, ** on request

SML Double Branches 45°

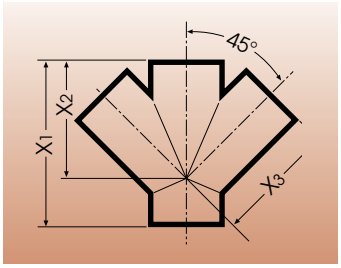

SML double branch 45°

DN	X1	X2	X3	kg	item no.
100 x 100	260	190	190	5,1	100260
125 x 100	280	220	220	6,5	237737
150 x 100	280	225	225	8,2	661444

SML Branches 70°

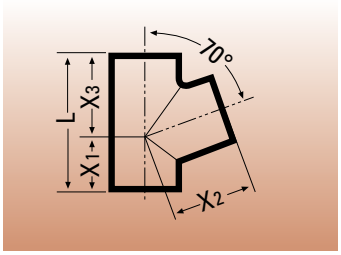

SML single branch 70°

DN	X_1	X_2	X_3	L	kg	item no.
50 x 50	55	80	80	135	0,9	663014
70 x 50*	55	90	90	145	1,2	663044
70 x 70*	70	100	100	170	1,6	663074
100 x 50*	55	110	100	155	1,9	663104
100 x 70*	70	120	110	180	2,3	663134
100 x 100	85	130	130	215	3,0	663164
125 x 50*	55	120	110	165	2,7	663194
125 x 100	85	145	140	225	4,8	663254
150 x 100*	85	155	150	235	5,3	663374
150 x 125*	100	170	165	265	6,2	663404

* obsolete model

SML Double Branches 70°

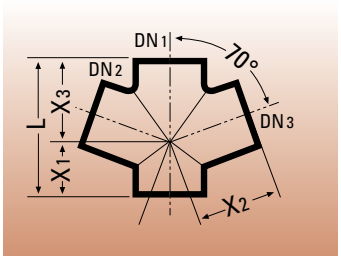

SML double branch 70°

DN	X_1	X_2	X_3	L	kg	item no.
100 x 100 x 100	85	130	130	215	3,5	663864
125 x 100 x 100	85	145	140	225	5,0	663954

Important note on 70° branches!

As per German DIN 1986, for connection of horizontal pipes up to DN 70 to down pipes, branches of 88° are to be used. This is to prevent negative pressure in the connecting pipes. SML branches 88° with an access angle of 45° also allow to connect larger diameters from DN 100 up to the down pipe. This is space-saving and guarantees connecting pipes without negative pressure. Therefore 70° branches are no longer required and are no longer contained in German DIN 19522. As 70° branches are however still on demand, we sell a reduced range of 70° branches until further notice.

SML Branches 88°

entry angle 45°

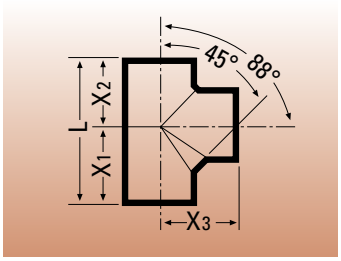

SML single branch 88° DIN 19522

DN	X_1	X_2	X_3	L	kg	item no.
50 x 50	79	66	80	145	0,9	663024
70 x 50*	83	72	90	155	1,4	663054
80 x 50	95	85	90	180	1,5	235153
70 x70*	97	83	95	180	1,7	663084
80 x 80	95	85	95	180	1,8	235155
100 x 50	94	76	105	170	2,1	663114
100 x 70*	102	88	110	190	2,4	663144
100 x 80	105	85	110	190	2,5	235157
100 x 100	115	105	120	220	2,9	663174
125 x 50	98	82	120	180	3,0	663204
125 x 70*	107	93	125	200	3,4	663234
125 x 80	110	94	125	205	3,1	235158
125 x 100	125	110	130	235	4,0	663264
125 x 125	137	123	135	260	4,6	663294
150 x 50	100	100	140	200	4,4	663324
150 x 100	130	115	145	245	5,5	663384
150 x 125	147	128	150	275	6,2	663414
150 x 150	158	142	155	300	6,9	663444
200 x 200	205	175	210	380	10,1	234752

* obsolete model

SML Double Branches 88°

entry angle 45°

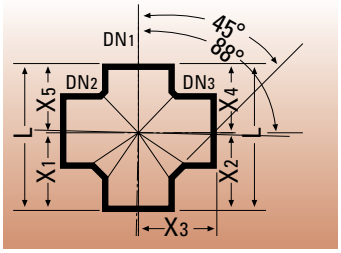

SML double branch 88°

DN_1	DN_2	DN_3	X_1	X_2	X_3	X_4	X_5	L	kg	item no.
100 x	50 x	50	100	100	105	80	80	180	2,2	663814
100 x	70 x	70*	102	102	110	88	88	190	2,7	663844
100 x	80 x	80	110	110	120	95	95	205	3,2	236353
100 x	100 x	100	120	120	120	110	110	230	3,2	663874
150 x	100 x	100	130	130	145	115	115	245	7,1	664084

* obsolete model

The German standard DIN 1986-100, a national amendment to EN 12056, used to forbid the connection of waste water containing excrements facing a connection of waste water without excrements. It was feared that excrements might be washed into the bathtub siphon.

However, after extended experiments, the new version of DIN 1986-100 allows the installation as shown below with double bends 88° with 45° entry angle.

Installation example SML Double Branch 88°

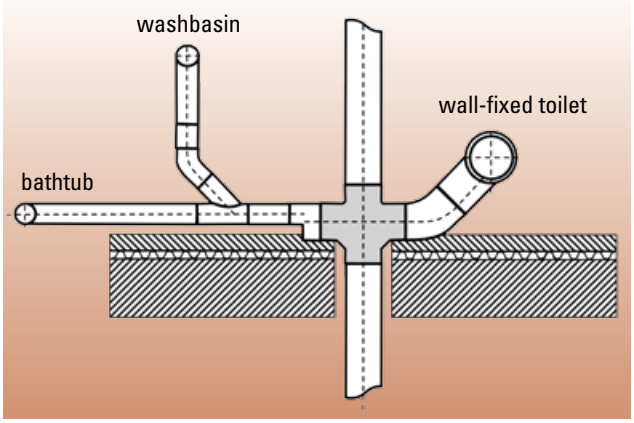

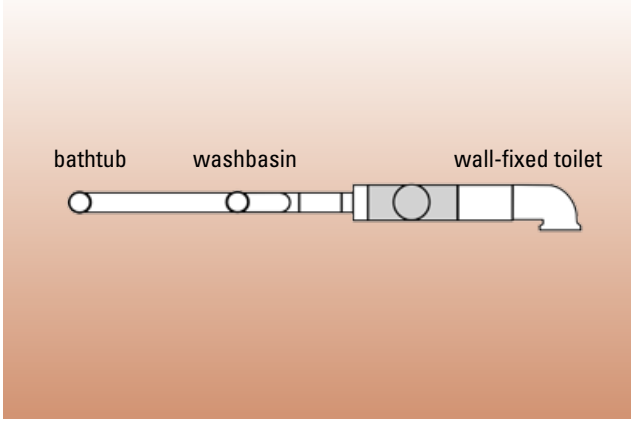

SML Corner Branches 88°

entry angle 45°, corner angle 90°

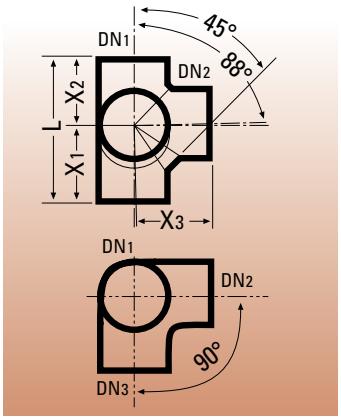

SML corner branch 88° DIN 19522

DN_1		DN_2		DN_3	X_1	X_2	X_3	L	kg	item no.
80	x	80	x	80	105	90	105	195	2,2	235850
100	x	70*	x	70	102	88	110	190	2,7	662044
100	x	80	x	80	110	95	120	205	2,5	236346
100	x	100	x	100	115	105	120	220	3,4	662034
125	x	80	x	80	125	110	140	235	4,5	235846
125	x	100	x	100	125	110	130	235	4,6	662014
150	x	100	x	100	130	115	145	245	4,9	664434

* obsolete model

SML Branches 88°

with long spigot, entry angle 45°

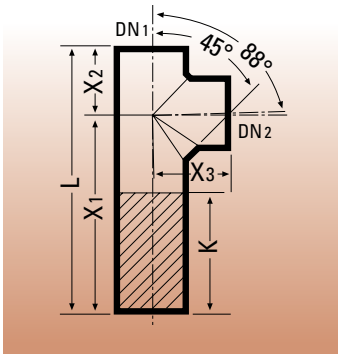

SML single branch 88° long DIN 19522

DN	X_1	X_2	X_3	L	K*	kg	item no.
100 x 100	325	105	115	430	210	4,6	664454

* dimension for maximum cut-back
especially suited for ceiling penetrations

SML Corner Branches 88°

with long spigot
entry angle 45°, corner angle 90°

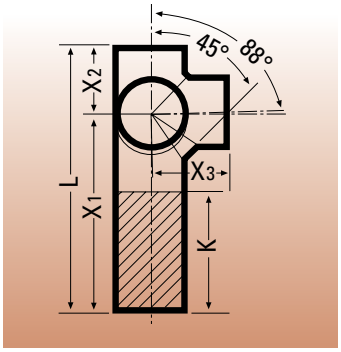

SML corner branch 88° long DIN 19522

DN	X_1	X_2	X_3	L	K*	kg	item no.
100 x 100 x 100	325	105	115	430	210	5,2	664464

* dimension for maximum cut-back
especially suited for ceiling penetrations

SML Swept Entry Branches 88°

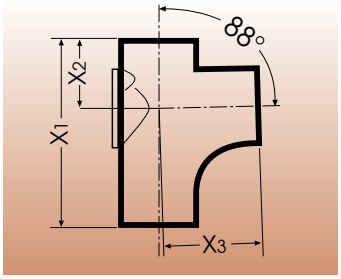

SML swept entry access branch 88°

DN	X1	X2	X3	kg	item no. with access	item no. without access
100 x 100	270	102	150	4,5	100269	
100 x 100	270	102	150	4,2		217969

SML Parallel Branches

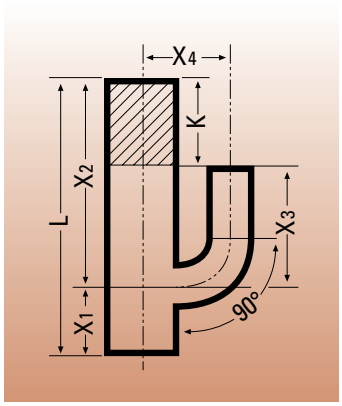

SML parallel branch DIN 19522

DN	X_1	X_2	X_3	X_4	L	K*	kg	item no.
100 x70**	100	300	175	125	400	125	6,5	664474
100 x 80	100	300	175	125	400	125	6,9	236354

* dimension for maximum cut-back, ** obsolete model

especially suited for ceiling penetrations

SML Combination Branches

entry angle 45°

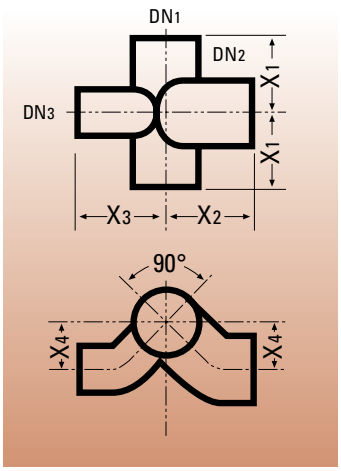

SML combination branch

DN	X_1	X_2	X_3	X_4	kg	item no.
100 x 100 x 70*	115	140	130	70	4,0	665834
100 x 100 x 80	115	140	135	70	4,1	235345
100 x 100 x 100	115	140	140	70	5,0	665924

* obsolete model

The easy-flow designed double branch for space-saving waste water supplies to down pipes in pipe shafts, behind faced brickwork or in sanitary blocks allows simultaneous connection to various sanitary objects. Because of the double-sided arrangement of the access angles at 45°, this branch can be installed laterally reversed by vertical turning of 180°. It allows the level connection of WC and, for example, bathtub.

Drinking water or heating supply lines or other pipelines can be installed next to the downpipe without conflicts with the waste water connection lines.

Installation example SML combination branch

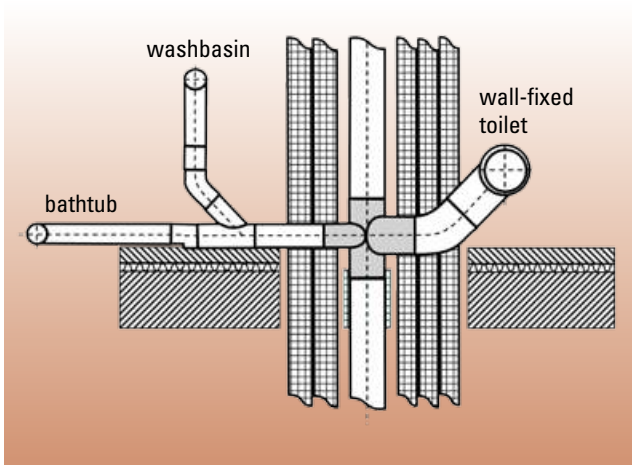

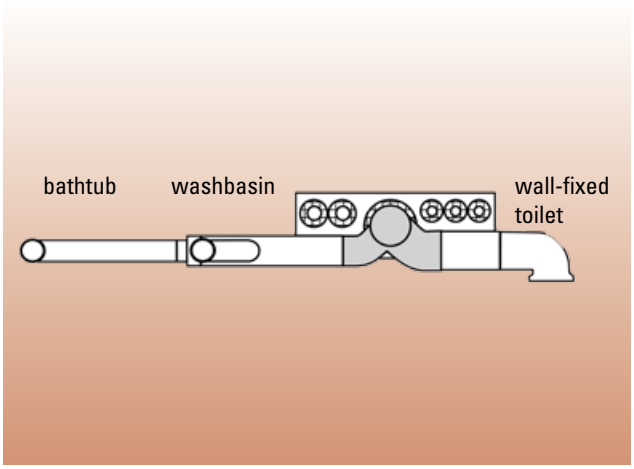

SML Inspection Pipes
for down pipes with round opening

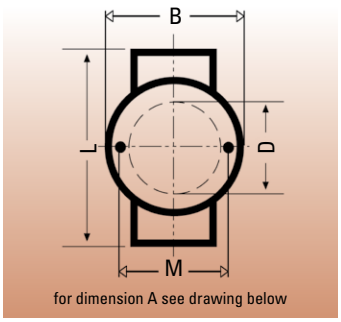

for dimension A see drawing below

SML inspection pipe round DIN 19522

DN	A	B	D	L	M	kg	item no.
50	59	105	53	190	80	2,3	669580
70*	69	125	73	210	105	2,9	669583
80	74	135	78	220	110	3,1	235166
100	84	159	104	260	130	5,0	669586

* absolete model

with toroidal sealing ring in EPDM as per DIN 4060

SML Inspection Pipes
for horizontal and down pipes
with rectangular opening

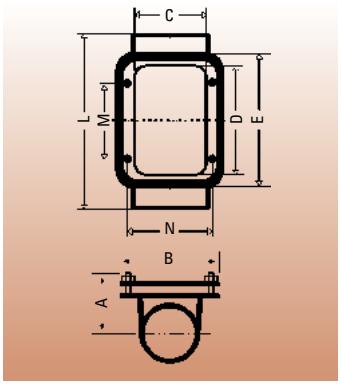

SML inspection pipe rectangular DIN 19522

DN	A	B	C	D	E	L	M	N	kg	item no.
100	83	160	100	200	230	340	130	130	7,6	669624
125	101	190	125	225	255	370	150	160	10,3	669627
150	112	215	150	250	280	395	170	180	13,1	669630
200	137	262	200	300	330	465	200	235	22,0	669633
250	170	330	259	350	426	570	230	300	36,5	669612
300	195	380	309	400	476	640	280	350	51,0	669615

DN 100 to DN 200 with toroidal sealing ring in EPDM.

DN 250 and DN 300 with 6 hermetic plug screws and flat sealing in EPDM.

SML Plugs

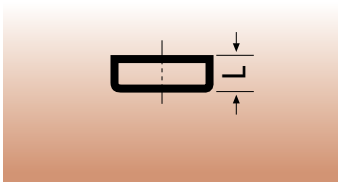

SML plug DIN 19522

DN	L	kg	item no.
50	30	0,2	665504
70*	35	0,4	665514
80	35	0,5	235163
100	40	0,5	665524
125	45	1,1	665534
150	50	1,7	665544
200	60	3,1	665554
250	70	6,0	665564
300	80	9,5	665574

SML Hermetic Plugs

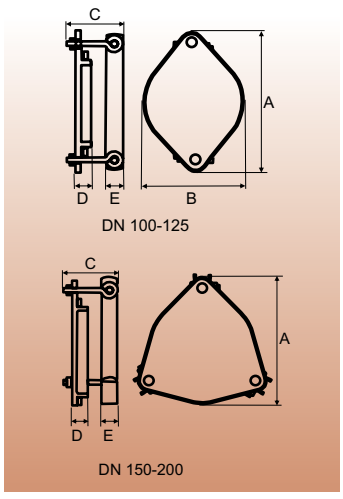

SML hermetic plug

DN	A	B	C	D	E	kg	item no.
100	179	122	86	24	25	1,1	664804
125	204	145	86	24	25	1,4	664814
150	200	–	85	24	25	2,1	664824
200	248	–	71	24	25	3,3	664834



rubber seal in EPDM

DN	kg	item no.
100	0,05	100700
125	0,07	100701
150	0,09	100702
200	0,11	100703

SML Odour Traps (siphons)
for horizontal or vertical connection

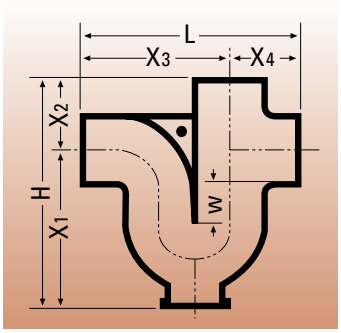

Cleaning trap below.

SML odour trap horizontal/vertical DIN 19522

DN	L	H	X_1	X_2	X_3	X_4	W	kg	item no.
50	190	250	182	68	122	68	60	2,8	669562
70*	265	293	200	93	172	93	60	5,0	669563
80	265	285	190	95	170	95	80	5,8	235165
100	325	392	282	110	215	110	100	9,9	669564
125	390	446	316	130	260	130	100	13,0	669565
150	470	493	348	145	325	145	100	19,5	669566
200	600	600	420	180	400	200	100	36,5	669567

The supplying side of the SML odour traps DN 50 to DN 200 may be connected either to the horizontal or the vertical pipe. Bends can guide the outlet into different directions. The supply opening not used is to be closed with a hermetic plug with press-sealing automatically supplied.

Installation examples

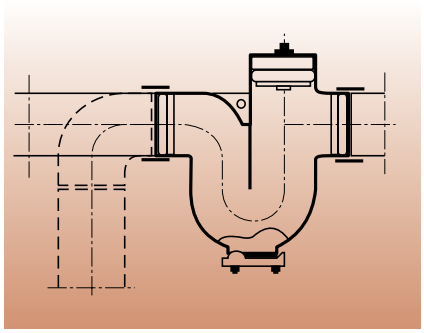

horizontal supply

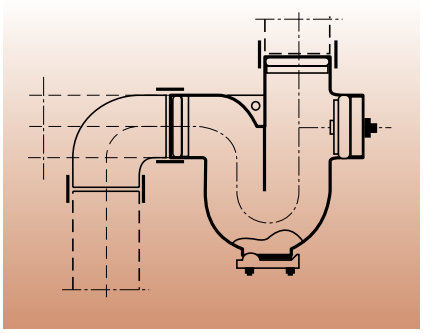

vertical supply

SML Down Pipe Odour Traps (rain water siphon)
for vertical connection

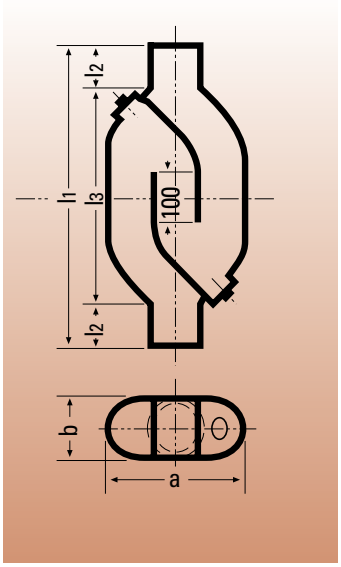

SML down pipe odour trap DIN 19522

DN	a	b	l_2	l_3	l_1	kg	item no.
70*	195	90	80	312	472	9,0	669557
80	195	90	70	333	472	9,6	236357
100	276	124	90	408	588	16,0	669558
125	344	144	100	487	687	28,5	669559
150	374	179	110	522	742	38,0	669560

100 mm sealing height, vertical version with upper and lower cleaning hole for installation in rain water down pipes. Use of this odour trap is necessary when run-off areas (e.g. balcony or patio drainage) are connected to the rain water pipes which join mixed water pipes. Installation must be carried out in a frost-protected area - we advise above the cleaning hole before junction of the down pipe into the base pipe.

SML Anti-Siphon Traps
with cleaning trap below

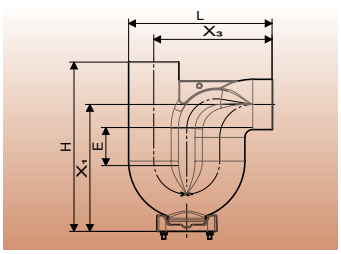

SML anti-siphon trap

DN	L	H	E	X1	X3	kg	item no.
50	175	255	80	209	146	3,0	238374
70*	245	312	80	240	201	4,6	238375
80	243	310	80	238	201	6,0	239696
100	316	374	80	281	261	8,8	238373

* obsolete model

Cleaning trap: DN 50 with one bolt, DN 70 up to DN 100 with two bolts

SML P-Siphons plain

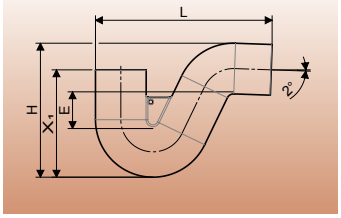

SML P-siphon

	DN	L	H	E	X1	X2	X3	kg	item no.
plain	100	385	292	80	234	-	-	5,9	236012
with 50 mm vent	100	385	329	80	234	95	250	6,2	236010

SML P-Siphons with 50 mm vent

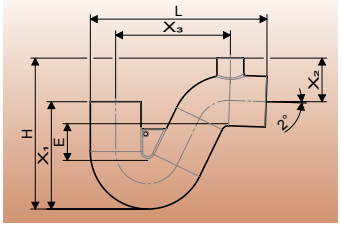

SML S-Siphons plain

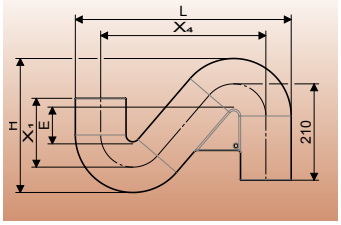

SML S-siphon

	DN	L	H	E	X1	X2	X3	X4	kg	item no.
plain	100	471	292	80	150	210	290	360	7,7	236013
with 50 mm vent	100	471	327	80	150	210	290	360	7,8	236011

SML S-Siphons with 50 mm vent

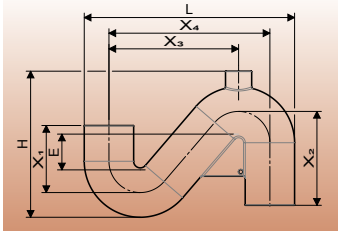

SML Plain Traps

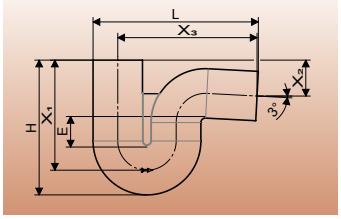

SML plain trap

DN	L	H	E	X1	X2	X3	kg	item no.
100	368	300	68	245	80	310	8,0	100261

Odour trap as a combination of bends and fittings with a minimum sealing height of 100 mm

Example 1:
DN 70 to 150 with 4 bends 88°

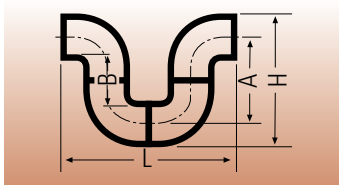

SML fittings combinations

DN	A	B	H	L
70*	185	115	263	375
80	190	108	272	393
100	225	125	335	457
125	255	130	390	518
150	295	145	455	600

* obsolete model

Example 2:
DN 200 to 300 with 1 branch 45°, 3 bends 45°, 1 hermetic plug, 2 pipe cuttings

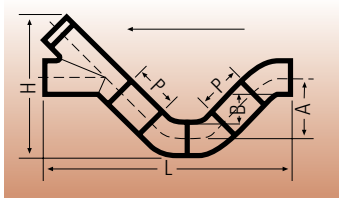

DN	A	B	H	L	P
200	300	100	766	1280	195
250	350	100	941	1525	225
300	400	100	1096	1775	246

SML Rain Water Stand Pipes
without socket

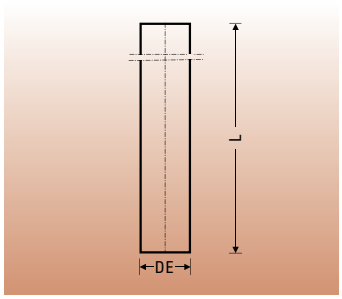

SML rain water stand pipe without socket

type	DN	DE	L	kg	item no.
without inspection opening	100	110	1000	8,5	660264

For connection to pipes of other materials (zinc, copper etc) in dimension 80 - 100 mm.
Pipes inside with yellow epoxy coating, outside with a reddish brown primer coating.
Fixing: with normal pipe clamps.

Attention: For a durable good appearance we recommend to coat rainwater standpipes after installation. Suitable paints are alkyd or acrylic varnishes with corrosion protection additive.

Rain Water Stand Pipes
with socket

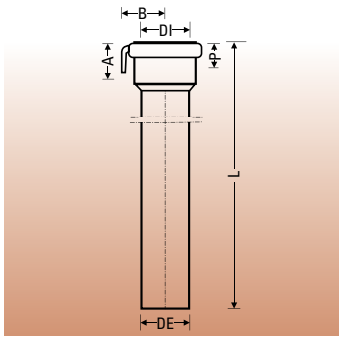

Rain water stand pipe with socket

DN	DE	DI*	L	B	A	P**	kg	item no.
100	110	110	1000	85	81	45	8,8	662230

* outer diameter of connecting pipe. Standpipes can be connected to rainwater downpipes made of zinc, copper or plastics.

** Insertion length. For easier insertion we recommend to cut the pipe ends in an angle.

Phosphated inside and outside, coating on a PVC basis in shade RAL 7032 (grey)
Sockets with inserted EPDM sealing. Fixing with the integrated socket hook and a fixing loop (not delivered), consisting e.g. of a U profile and a bolt. The minimum distance to the wall is DE 20mm, wider distances can be realised through further wedges.

Attention: For a durable good appearance we recommend to coat rainwater standpipes after installation. Suitable paints are alkyd or acrylic varnishes with corrosion protection additive.

SML Adapters with Clamp and Wall Flange

following German DIN 18195
(sealing against non-pressing water)

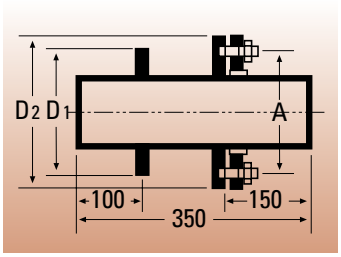

SML adapter with clamp and wall flange

DN	A	D_1	D_2	kg without clamp flange	kg with clamp flange	item no. without clamp flange	item no. with clamp flange
100*	191	190	230	9,0	11,6	665874	669605

*obsolete model, DN 100 continues to be available in the TML range

With 4 locking screws M 12 x 45, 4 hexagon nuts M 12

The waterproofing (bitumen sheet) must be glued allover to the clamp flange and clamped tight.

SML Pipes with Wall Flange

for installation as wall penetration in water-tight concrete

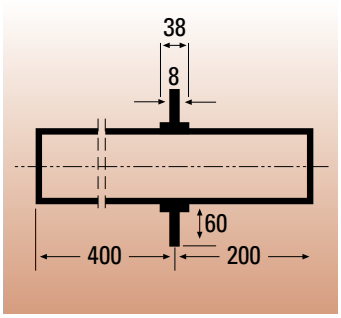

SML pipe with wall flange

DN	L	kg	item no.
100*	600	8,8	662224

* obsolete model, item continues to be available in the TML range

SML adapters with clamp and wall flange

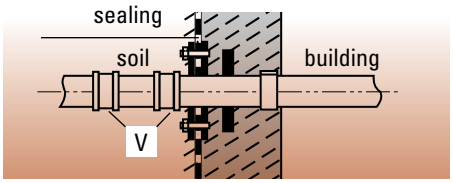

SML pipe with wall flange

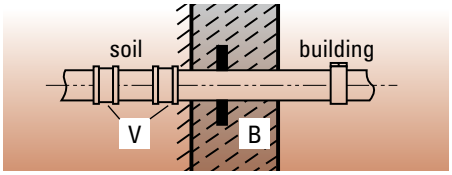

V = SVE coupling to compensate for soil movement, B = water-tight concrete

Pipes with wall flange and adapters with clamp and wall flange can be used for wall penetrations of drainage pipes which depend upon water and gas impermeability, e.g. in outer walls, floor plate, basement waterproofing. As SML is not suitable for underground installation as per EN 877, these items continue to be available in the TML range of products.

SML Roof Penetrations as per DIN 18195-5 with fixed and loose flange with inserted profiled sealing for waterproof sealing between pipe and penetration fitting

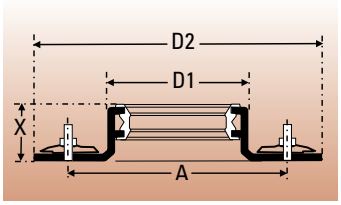

SML roof penetration

DN	D_1	D_2	A	X	kg	item no.
80	135	286	215	60	6,1	238836
100	158	324	246	60	6,6	238837
125	188	349	271	60	7,5	238838

For roofs with one sealing level, one SML roof penetration fitting is required per pipeline.
In case of warm roof penetrations, two penetration fittings are to be used.

Sealings to pinch in highly polymeric roofing paper

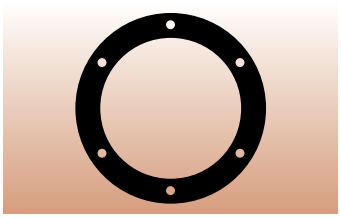

sealing for SML roof penetration

DN	kg	item no.	
		EPDM	NBR
80	0,2	238830	238833
100	0,3	238831	238834
125	0,3	238832	238835

installation example

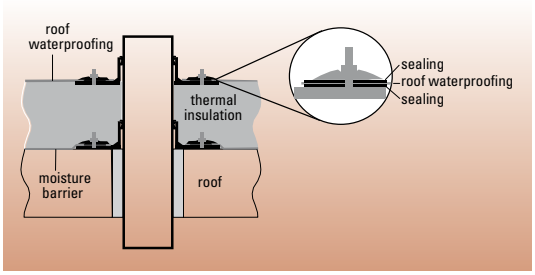

For each SML roof penetration, two sealings are to be used. The material of the sealings (EPDM or NBR) should be decided in co-operation with the manufacturer of the roof waterproofing. The sealings are not automatically included in the delivery of the roof penetration.

SML Connections
with short socket and inserted rubber profile seal

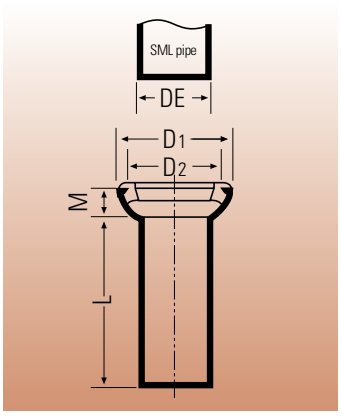

SML connection with short socket

DN	D_1	D_2	L	M	DE	kg	item no.
100	144	125,5	250	40	110	3,4	662194
125	172	151,5	250	42,5	135	4,6	662204
150	201	178,5	250	45	160	6,1	662214

SML connections at the bare ceiling.
SML pipe imbedded in concrete, where the continuation above the bare ceiling can only be carried out later.

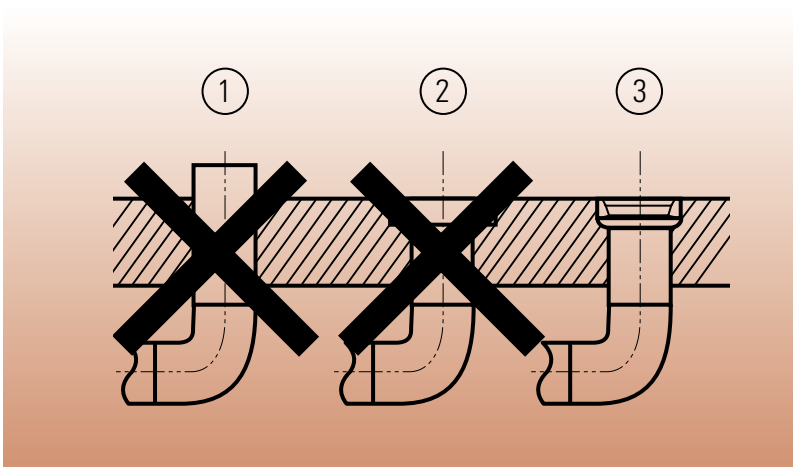

Example no. 1:
Pipe openings are easily tripped over, which can lead to injuries or damage.

Example no. 2:
the space is saved for the coupling. An enlargement is usually inevitable.

Example no. 3:
The socket connection piece is imbedded in concrete at the same level with the upper edge of the bare ceiling and protected by a sealing hood. The inserted sealing guarantees an easy and unproblematic later continuation.

SML Connecting Bends 90°
for sinks and urinals

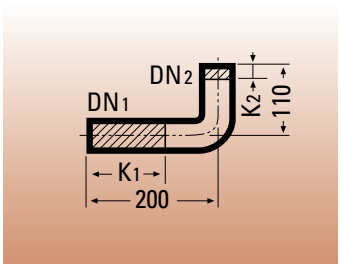

SML connecting bend long DIN 19522

DN 1		DN 2		K1*	K2*	kg	item no.
50	x	40	long	120	20	1,4	661744
50	x	50	long	120	25	1,5	661754
50	x	60	long	120	30	1,5	661764

* dimension for maximum cut-back

SML Connecting Y-Pipes 90°
for wash basins etc.

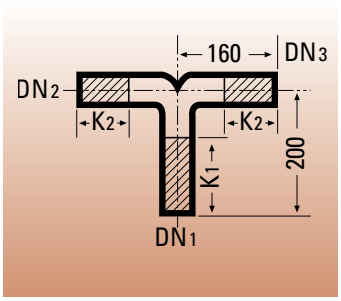

SML connecting Y-pipe DIN 19522

DN 1		DN 2		DN 3	K1*	K2*	kg	item no.
50	x	50	x	50	125	85	2,5	661794

* dimension for maximum cut-back

Rubber connections

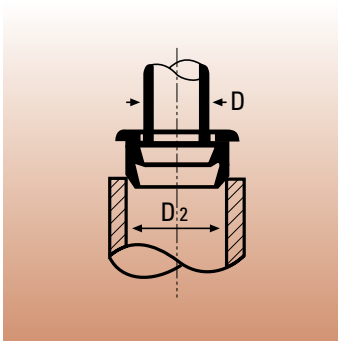

Rubber connections

for SML-bend DN	D2 (connecting pipe)	D	marks**	item no.
50 x 40	40	28-34	40 / 30 klein	100088
50 x 50 / 40 x 50	50	28-34	40 / 30 groß	100125
50 x 50 / 40 x 50	50	38-44	40 / 40	100089
50 x 60	60	28-34	50 / 30	100092
50 x 60	60	38-44	50 / 40	100091
50 x 60	60	48-54	50 / 50	100090

** Please note: the rubber push-in connectors for the bends 40x50, 50x50 and 50x60 bear marks which differ from the nominal widths.

SML Manifold Connectors

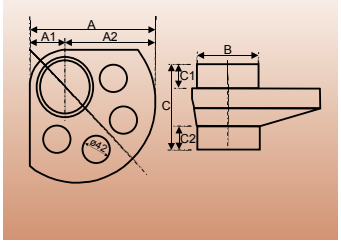

SML manifold connector

DN	A	A1	A2	B	C	C1, C2	kg	item no.
100	234	65	169	110	145	40	4,6	214089
150	270	90	180	160	185	60	5,2	240417

The Düker SML Manifold Connector simplifies plumbing by collecting up to three (DN 150) or four (DN 100) connections from various sources such as bathtubs, wash basins, bidets, urinals, showers and sinks to a singular point above the finished floor level.
It permits the connection of 32 mm (1 ¼“, OD 36 mm), 40 mm (1 ½“, OD 43 mm) and/or 50 (2“, OD 56 mm) plastic waste inlets to a SML pipe stack. It is supplied with rubber grommets which can be cut to these diameters along corresponding grooves in the grommets. The grommets need to be installed with a silicone sealant.

Further connection possibilities for sanitary objects to SML DN 50, 70 and 80		
SML fittings	connection	connecting pipe (outer diameter)
SML bends 88°, DN 50	rubber connector size 40/30 groß (large)	28–34 mm
SML branches 88°	rubber connector size 40/40	38–44 mm
with DN 50 outlets	Düker EK Fix connector DN 50	40–56 mm
SML bends 88°, DN 70		
SML bends 88°, DN 70 with long spigot	Düker EK Fix connector DN 70	56–75 mm
SML branches 88° with DN 70 outlets		
SML bends 88°, DN 80	Düker EK Fix connector DN 80	56–75 mm / 75–90 mm
SML bends 88° with DN 80 outlets		

WC Connections DN 100 with Special Sockets and Rubber Seals as per DIN 4060

SML WC Pipes

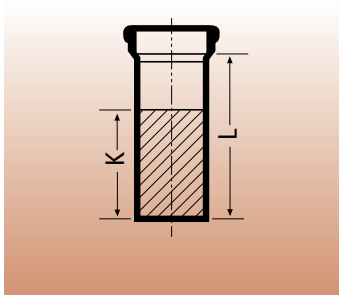

SML WC pipe 225 mm length					
DN	plastic pipe connection DN	L	K*	kg	item no.
100	100	225	170	3,5	663734

* dimension for maximum cut-back

SML WC Bends 90°

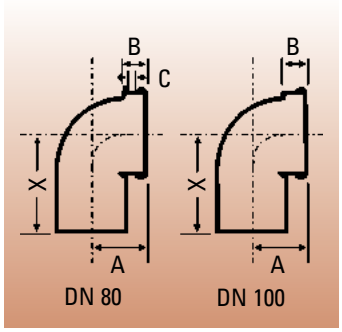

SML WC bend 150 mm length							
DN	plastic pipe connection DN	X	A	B	C	kg	item no.
80	90	150	98	55	15	2,2	662794
100	100	150	84	44	–	2,6	662684

SML WC Y-Pipes 90°

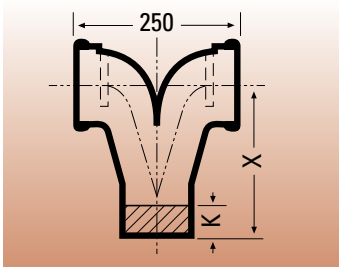

SML WC Y-pipe 90°						
DN	plastic pipe connection DN	X	A	K*	kg	item no.
100	100	225	250	50	5,8	662474

* dimension for maximum cut-back

SML WC Bends 90° Offset
for horizontal installation

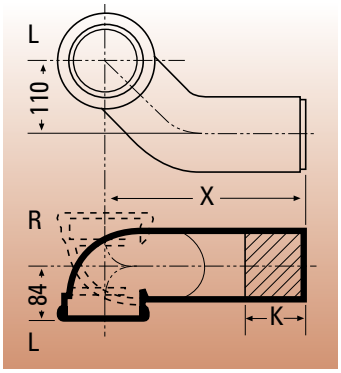

SML WC bend 90° offset

DN		plastic pipe connection DN	X	K*	kg	item no.
100	R = right version	100	295	90	5,6	663804
100	L = left version	100	295	90	5,6	663794

* dimension for maximum cut-back

SML WC Y-Pipes 90° Offset
for horizontal installation

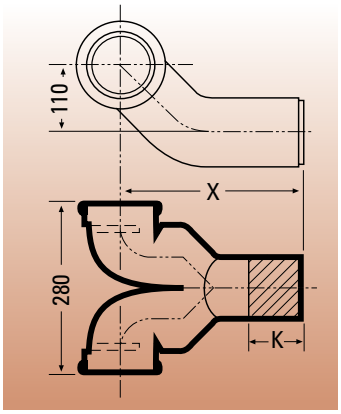

SML WC Y-pipe 90° offset

DN	plastic pipe connection DN	X	K*	kg	item no.
100	100	295	90	7,8	662994

* dimension for maximum cut-back

SML WC Branches 88°

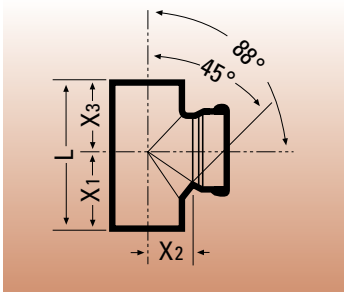

SML WC branch 88°

DN	plastic pipe connection DN	X_1	X_2	X_3	L	kg	item no.
100 x 100	100	115	75	105	220	3,5	663904

SML WC Branches
for Modernisation of old buildings

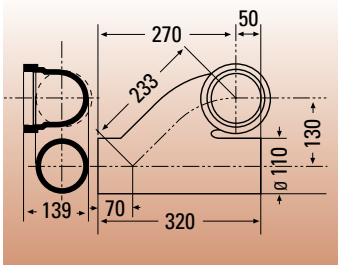

SML WC branch for modernisation

DN	version	plastic pipe connection DN	kg	item no.
100	left	100	7,0	662164
100	right	100	7,0	662174

illustration: right version

Dimensions of Special Sockets and Rubber Joints

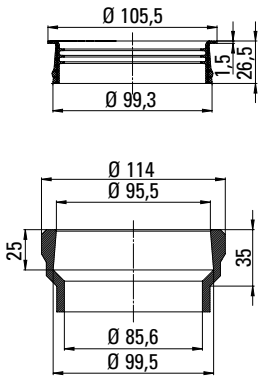

WC-socket for plastic pipe connection DN 90
item no. rubber joints separately: 236685

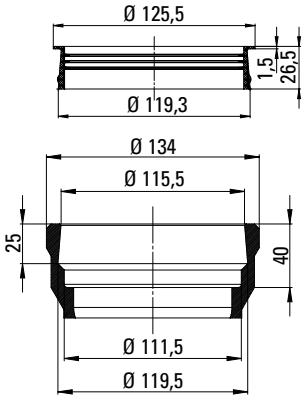

WC-socket for plastic pipe connection DN 100
item no.rubber joints separately: 100000

Installation examples

SML WC branch for modernisation of old buildings. This special branch is meant for connecting a standing WC when laying SML pipe onto an already finished floor (e.g. when modernising an old building). With use of this WC branch, it is possible to lay the collective connecting pipe onto the existing floor. The top coat in the area of the branch (down pipe) must be omitted. The connection height of a standing WC with horizontal outlet is generally 180 mm from the middle of the WC outlet to the upper edge of the finished floor. A customary WC connecting piece (outer dimension 110 mm, in plastic) is necessary for the connection of the WC outlet to the SML connecting socket.

Example 1:
Installation of the branch into a collective connecting pipe for connection of a standing WC with horizontal outlet.

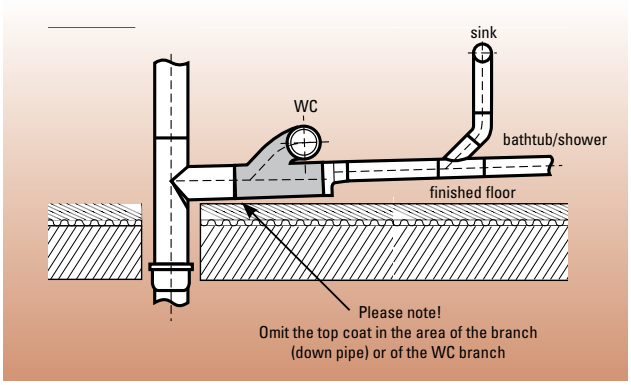

Example 2:
Installation of a branch into a down pipe for the connection of a standing WC with horizontal exit. Only surface-cistern, close-coupled cistern or flushing valve possible.

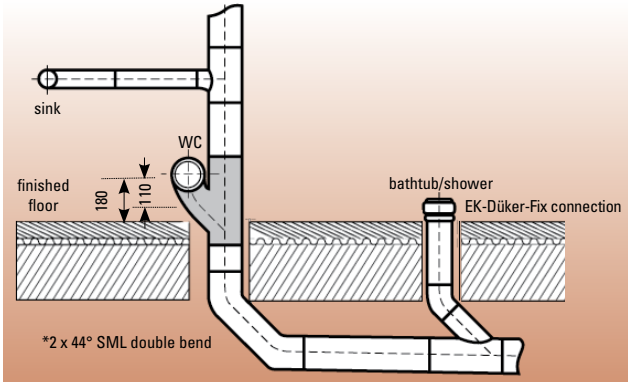

* Installation guideline for waste water down pipes as per German DIN 1986:
„Foot bends of 88° ± 2° are permitted for down pipes which do not run through more than three storeys or which are not longer than 10 m and which pass over to horizontal pipes.“ However, we recommend using the 2 x 44° double bend for sound insulation reasons.

Connection examples standing WC

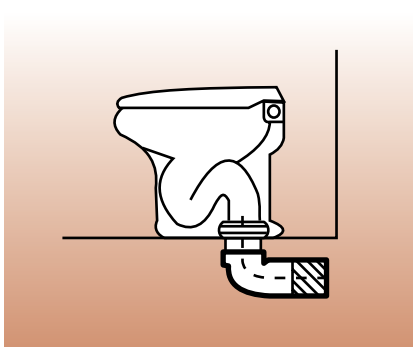

1. Standing WC with hidden vertical outlet. Connection to a cast iron WC connection bend with a plastic WC connection piece.

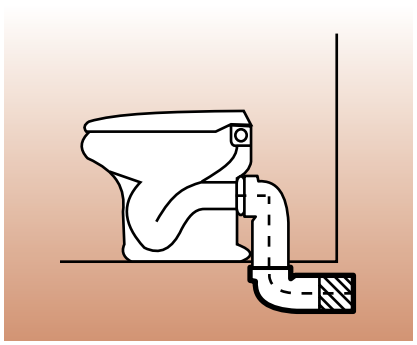

2. Standing WC with horizontal outlet. Connection to a cast iron WC connection bend with a plastic WC connection bend 90°.

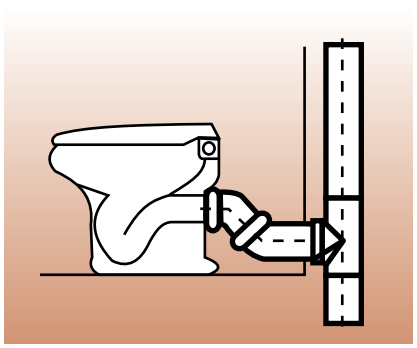

3. Standing WC with horizontal outlet. Wall connection to a cast iron WC branch 88° in a down pipe. The difference in height of 100 mm between the water level of the WC odour trap and the base of the connecting pipe recommended in this case is achieved by putting two plastic connecting pipes 45° into one another. The normal SML branch DN 100 88° with Düker-Fix connection can be used for wall connection instead of the WC branch.

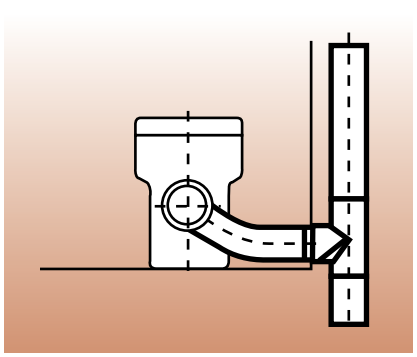

4. Standing WC with horizontal exit.Wall connection on the side with the down pipe. The recommended difference in height in the connecting pipe is achieved by a cast iron WC bend which shows an offset of 110 mm. The WC with a straight plastic WC connection piece is connected to this bend.

Installation notes for WC connectors

In general: When connecting WC connectors to down pipes we recommend SML branches 88° with 45° access angle which offer the best draining conditions.

Connecting pipes of WCs should be branched into the down pipes so that the difference in height between the water level of the WC siphon and the base of the connecting pipe at the junction into the down pipe is at least the DN (100 mm for DN 100). Please always note this rule when connecting lavatories with horizontal outlets to the wall.

As per current state of the art, standing WCs are only supplied with vertical or horizontal outlet. Plastic WC connecting pieces Ø 110 mm with sealing lips or compression connections are used for joining the WC outlet to the cast iron (bend 22°, 45° and 90° as well as straight connecting pieces).

Connection examples standing WC / wall WC

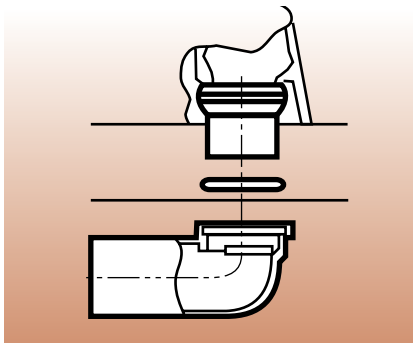

5. Connection detail: Plastic WC connection piece, cast iron WC connection bend with special socket and rubber seal.

Wall WC connections are carried out by joining straight plastic WC connection pieces Ø 110 mm and sealing lips to cast iron WC connection pieces with special socket and sealing ring.

The connection may not be carried out directly to the down pipe, but only via bends or bend combinations which consider the difference in height of at least 100 mm.

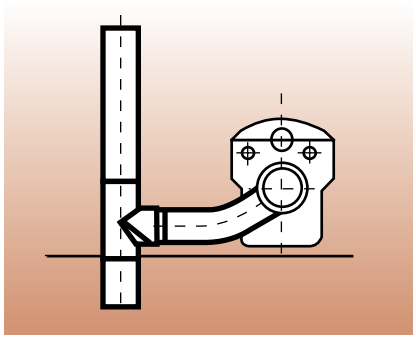

6. Wall WC connection with cast iron WC connection bend and plastic WC connection pieces.

The cast iron WC connection bends which show an offset of 110 mm and can be connected (almost) horizontally to a SML branch 88° guarantee an optimum of draining conditions. The simple WC connection bends should only be used when the given difference in height is reached due to the arrangement of the connecting pipe (refer to installation example no. 7). The simple WC double socket connector for the double-sided connection of wall WC is only intended for vertical arrangement since otherwise washing-ins from both sides would occur.

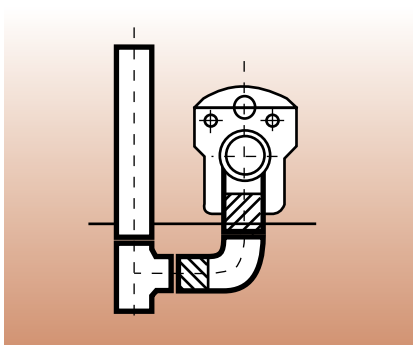

7. Wall WC connection with cast iron WC connection bend, a SML bend 88° with spigot and a plastic WC connection piece.

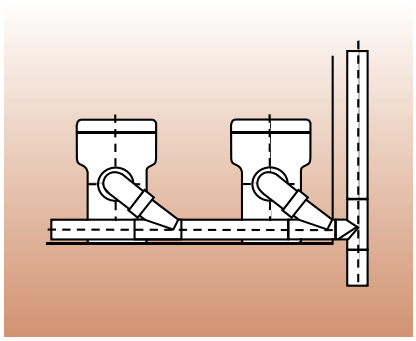

8. Standing WC with 4.5 or 6 l flush tank with plastic bend DN 90, EK-Düker-Fix coupling DN 80 and branch 45° DN 80. Both horizontal and down pipe are also in DN 80.

Attention: this solution is not approved in all countries. If DN 80 cast iron pipes are not admissible for toilet drainage in your country, we recommend to connect the DN 90 plastic bend to a DN 100 cast iron branch via a transition coupling by Mücher (www.muecher.com).

SML Boss Pipes 88°

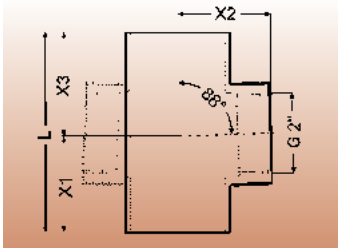

SML single/double boss pipe 88°

DN	X1	X2	X3	L	kg single	kg double	item no. single	item no. double
50	68	54	72	140	1,0	–	240581	–
70	71	64	74	145	1,2	–	231374*	–
100	77,5	80	77,5	155	1,9	2,3	100267	100266*
150	87,7	104	87,5	175	3,8	4,8	232746	237738

* obsolete model

SML Corner Boss Pipes 88°

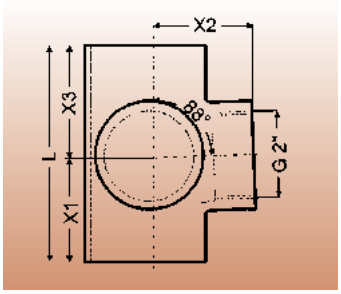

SML corner boss pipe 88°

DN	X1	X2	X3	L	kg	item no.
100	75	80	75	150	2,2	100318*

* obsolete model

SML Connectors
with Flange

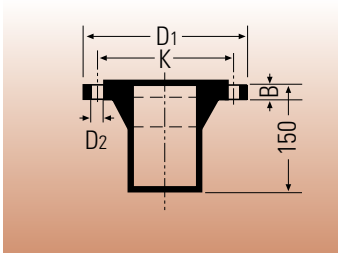

SML connector with flange DIN 19522

DN	D_1	D_2	B	K*	screws per 8 pcs	kg	item no.
100	220	18	24	180	M16	6,2	665934
125	250	18	26	210	M16	8,4	665944
150	285	22	26	240	M20	10,3	665954
200	340	22	26	295	M20	14,5	665964

Delivery without screws and seals

* 8 holes, PN6/PN10 as per EN 1092-2

SML Connections for Vitrified Clay Pipes

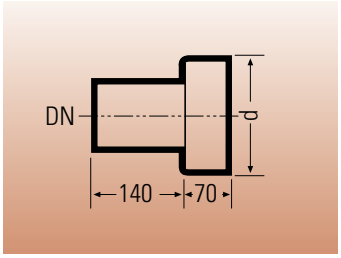

SML connection for vitrified clay pipes DIN 19522

DN	d	kg	item no.
100	159 ± 2,0	4,9	664924
125	187 ± 3,5	6,7	664934
150	218 ± 3,5	9,7	664944
200	278 ± 3,5	13,3	664954

Connections for these: clay pipe A ring or Tecotect-se-S seal

Connections of SML Pipes to other Soil Pipes

Vitrified Clay Pipe
(normal wall thickness)
to SML-pipe DN 250 and 200

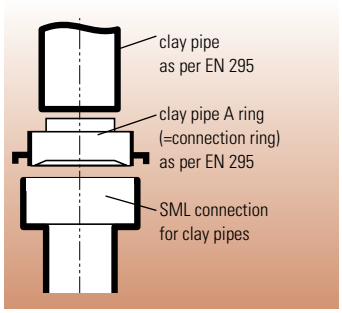

Clay pipe A ring EN 295	
DN	item no.
100	100312
125	100313
150	100314
200	100315

for SML connection for clay pipe.

Vitrified Clay Pipe
(normal wall thickness)
to SML-pipe DN 100 to 200

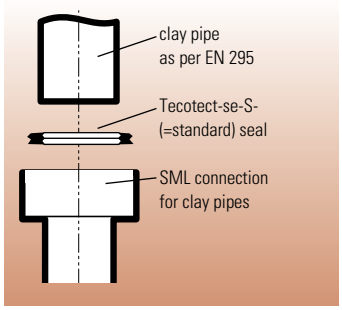

Tecoctect-se-S sealing	
DN	item no.
100	102567
125	102568
150	102569
200	102570

Tecotect-se-S-seal for SML connection for clay pipe.

SML Pipe to Vitrified Clay Pipe
with push-in socket "L" as per
EN 295 DN 100 to 200

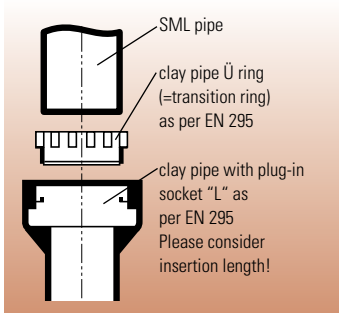

Clay pipe Ü ring EN 295	
DN	item no.
100	100295
125	100296
150	100297
200	100298

Clay pipe transition ring "clay pipe Ü ring" EN 295 (UR) for connecting SML to clay pipes with push-in socket "L" as per EN 295-1, jointing system "F".

For connection SML DN 200 and DN 250 to clay pipe with push-in socket "K" as per EN 295-1, jointing system "C", we recommend the transition ring of company Mücher (www.muecher.com).

SML Pipe to Vitrified Clay Pipe
(normal wall thickness) without
pre-finished seal DN 100 to 200

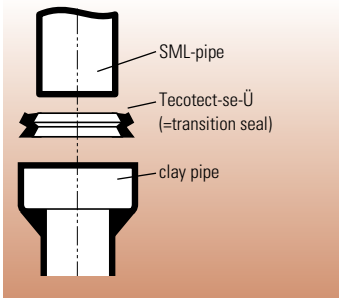

Tecotect-se-Ü sealing	
DN	item no.
100	102573
125	102574
150	102575
200	102576

Tecotect-se-Ü-seal for connecting SML to clay pipes without pre-finished sealing.

Connections of SML Pipes to other Soil Pipes

PVC underground sewage pipe with socket

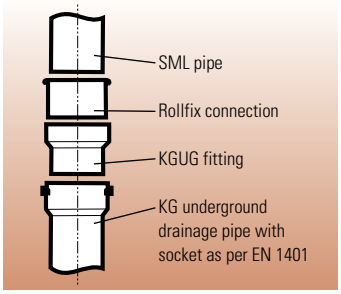

Rollfix joint and KGUG fitting

DN	item no.
100	–
125	–
150	–
200	–

available e.g from the company Otto Haas KG, www.haas.de

Various pipe materials (spigot end)

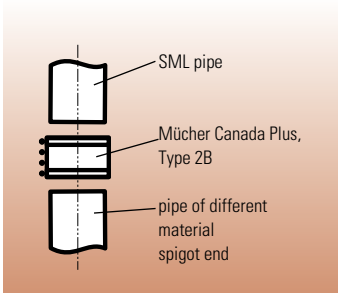

Mücher Canada Plus, Type 2B

large choice of diameters and pipe materials
when used with compensation rings also for differences in outside diameters

available from the company Mücher Dichtungen GmbH & Co.KG. www.muecher.com



02 Couplings Delivery Programme



Dükorapid® coupling

DN	D≈	H≈	L≈	item no.
50	71	83	47	218592
70*	91	103	45	218593
80	96	107	47	235494
100	123	135	47	214405
125	152	164	54	218594
150	177	189	54	218595
200	230	240	62	240168

* obsolete model, ≈ maximum dimensions after installation. DN 250 and 300 on request

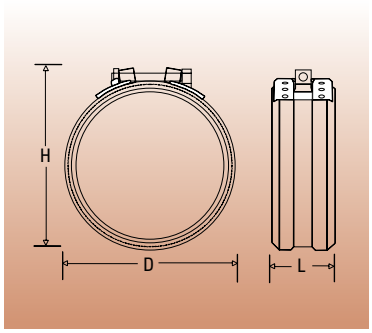

! OUR RECOMMENDATION !

One screw coupling

Material metal collar: W2, stabilised stainless steel, 1.4510/11 as per EN 10088

Material locking parts: lock 1.4301 or 1.4510/11
DN 50–150: screw and square nut steel with zinc lamellae coating, washer A2 as per DIN 125
DN 200: screw and square nut galvanised steel, washer 1.4301 2B as per EN 10088

Material sealing: EPDM

Axial restraint: up to 0.5 bar

Screw size: cylinder head bolt with hexagon socket
DN 50–150: M 8; DN 200: M 10

Torque: DN 50–150: 18 Nm; DN 200: 28 Nm;
if the locks should touch do not tighten any more.

Installation instructions see page 81.

with RAL GEG quality seal

RAL GÜTEZEICHEN

Entwässerungstechnik Guss



Dükorapid® Inox coupling

DN	D≈	H≈	L≈	item no.
50	71	83	47	240610
70*	91	103	45	240611
80	96	107	47	240614
100	123	135	47	240615
125	152	164	54	240616
150	177	189	54	240617
200	230	240	62	240618

* obsolete model, ≈ maximum dimensions after installation, DN 250 and 300 on request.

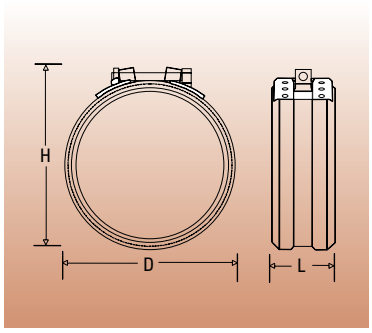

! OUR RECOMMENDATION !
FOR INSTALLATION UNDERGROUND AND OUTSIDE OF BUILDINGS

One screw coupling for soil installation without additional corrosion protection and for installation outside of buildings.
Attention: particularly aggressive soils may call for an additional corrosion protection (e.g. shrinking hose).

Material metal collar: W5, austenitic stainless steel, 1.4404 as per EN 10088-2

Material locking parts: lock 1.4404 as per EN 10088-2
bolt, washer, square nut steel A4

Material sealing: EPDM

Axial restraint: up to 0.5 bar

Screw size: cylinder head bolt with hexagon socket;
DN 50–150: M 8, DN 200: M 10

Torque: DN 50–150: 18 Nm; DN 200: 28 Nm;
if the locks should touch do not tighten any more.

Installation instructions see page 81.

with RAL GEG quality seal

RAL GÜTEZEICHEN

Entwässerungstechnik Guss



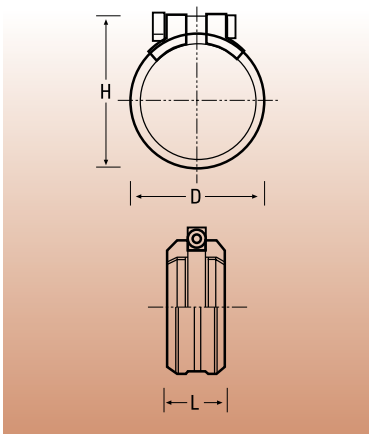

Rapid Inox coupling				
DN	D≈	H≈	L≈	item no.
50	70	80	39,5	234826
70*	90	100	39,5	234827
80	95	105	39,5	235472
100	125	135	45,4	234828
125	147	162	54,5	234829
150	172	187	54,5	234830
200	227	244	70,0	234831
250	278	306	91	234832
300	330	359	91	234833

* obsolete model, ≈ maximum dimensions after installation

One screw coupling for soil installation without additional corrosion protection and for installation outside of buildings.
Attention: particularly aggressive soils may call for an additional corrosion protection (e.g. shrinking hose)

Material metal collar:	W5, austenitic stainless steel, 1.4571 as per EN 10088
Material locking parts:	austenitic stainless steel 1.4571 as per EN 10088; screw, washer and square nut A4
Material sealing:	EPDM. NBR on request for waste water containing oil, animal grease, solvents or petrol
Axial restraint:	DN 50–200: up to 0.5 bar; DN 250–300: up to 0.3 bar
Screw size:	hexagon socket screw; DN 50–150: M 8; DN 200: M 10
Torque:	until both fastening heads come together
Marking:	Marking W5 on the metal collar

Installation instructions see page 81.



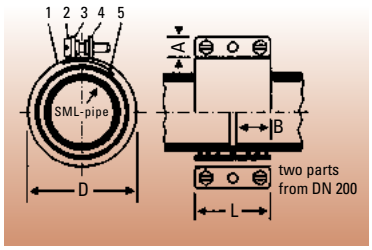

1 metal collar
2 slit hexagonal screws (DN 50 and 70 M6, DN 100 up to 300 M8)
3 guiding plate
4 threaded plate
5 sealing collar

CV coupling

DN	A	B	D≈	L	item no.
50	14	22,5	65	48	659436
70*	14	22,5	85	48	659437
80	14	22,5	88	48	235859
100	18	25,5	115	54	659438
125	18	31	140	65	659439
150	18	31	170	65	659440
200	18	37	220	78	659441
250	18	37	286	78	659442
300	18	37	338	78	659443

* obsolete model, ≈ maximum dimensions after installation

Double screw coupling. The metal collar is opened completely for installation, therefore the coupling is suitable for use in situations with reduced space.
Attention: not suitable for installation near ceiling and wall penetrations with fire rating.

Material metal collar:	stabilised stainless steel, material no. 1.4510/11 as per EN 10088
Material locking parts:	galvanised steel
Material sealing:	EPDM
Axial restraint:	–
Screw size:	slotted hexagonal screws; DN 50–80: M 6; DN 100–300: M 8
Torque:	DN 50–80: 6–8 Nm; DN 100–150: 10–12 Nm; DN 200–300: 15–20 Nm

Installation instructions see page 82.



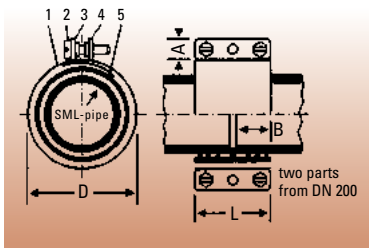

CE coupling

DN	A	B	D≈	L	item no.
50*	14	22,5	65	48	100240
70*	14	22,5	85	48	100236
100*	18	25,5	115	54	100185
125*	18	31	140	65	100237
150*	18	31	170	65	100241
200*	18	37	220	78	100186
250*	18	37	286	78	100187
300*	18	37	338	78	100188

* obsolete model, ≈ maximum dimensions after installation

Double screw coupling for soil installation (only with additional corrosion protection)
Also available as CV Inox (W5) version, suitable for bridge drainage applications with Düker MLB pipes.

Material metal collar:	W4, austenitic stainless steel, 1.4301 as per EN 10088
Material locking parts:	austenitic stainless steel, 1.4301/1.4541 as per EN 10088, screw A2
Material sealing:	EPDM. NBR on request for waste water containing oil, animal grease, solvents or petrol
Axial restraint:	–
Screw size:	hexagonal screws; DN 50: M6, AF 10; DN 100–300: M8, AF 13
Torque:	DN 50–70: 6–8 Nm; DN 100–150: 10–12 Nm; DN 200–300: 15–20 Nm
Marks:	CE, W4

Installation instructions see page 82.

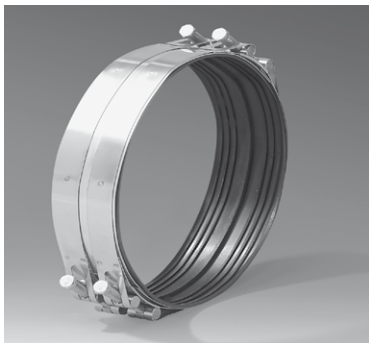

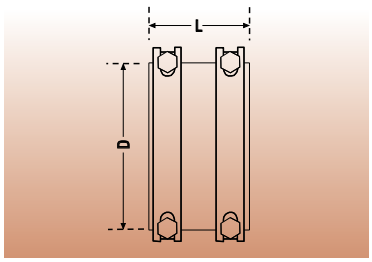

Düker CE dual ring coupling

DN	D	L	item no.
400	445	110	100307

Double screw coupling for soil installation (only with additional corrosion protection)

Material metal collar:	W4, austenitic stainless steel 1.4301 as per EN 10088
Material locking parts:	austenitic stainless steel, 1.4301 as per EN 10088
Material sealing:	EPDM
Axial restraint:	–
Screw size:	hexagonal screws M10
Torque:	35–40 Nm

Installation instructions see page 82.

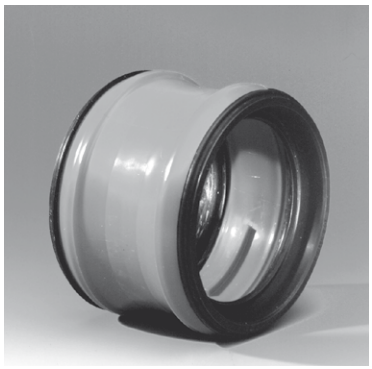

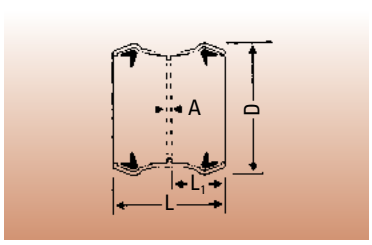

SVE coupling

DN	D	L	L_1	A	item no.
50	77	60	29	2	659468
80	103,5	65,5	32	2	235483
100	134	82	39,5	3	659478
125	161	103	50	3	659479
150	186	103	50	3	659480
200	238	114	55,5	3	659481

Plug connector for soil installation

German Approval no.:	Z-42.5-273
Material metal collar:	Polypropylene-CO
Material locking parts:	–
Material sealing:	sealing lips NR-SBR
Axial restraint:	–
Screw size:	–
Torque:	–

Installaton instructions see page 85.

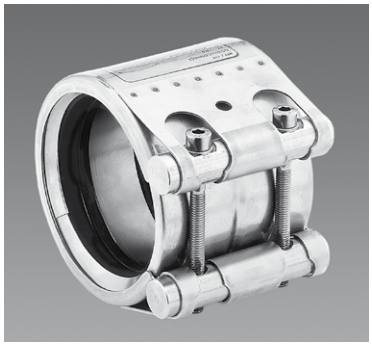

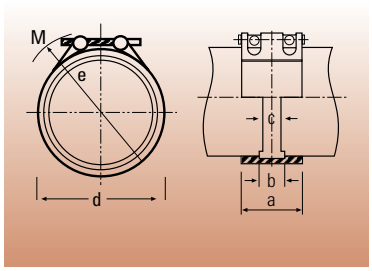

Connect-F Inox coupling

DN	a	b	c	d≈	e≈	item no.
100	98	40	25	130	150	234834
125	113	50	35	165	195	234835
150	113	50	35	185	215	234836
200	138	74	35	240	270	234837
250	138	74	35	305	335	234838
300	138	74	35	360	390	234839
400	139	74	35	460	490	234840
500	140	74	35	565	595	234841
600	139	74	35	665	695	234842

≈ maximum dimensions after installation

Coupling for installation in the soil or outside of buildings
Attention: particularly aggressive soils may call for an additional corrosion protection (e.g. shrinking hose)

Material metal collar:	austenitic stainless steel, 1.4571 as per EN 10088
Material locking parts:	bolts 1.4401, screws 1.4404 as per EN 10088
Material sealing:	EPDM
Axial restraint:	–
Screw size:	DN 100: M 8; DN 125–150: M 10; DN 200–600: M 12
Torque:	as stated on the coupling

Installation instructions see page 83.

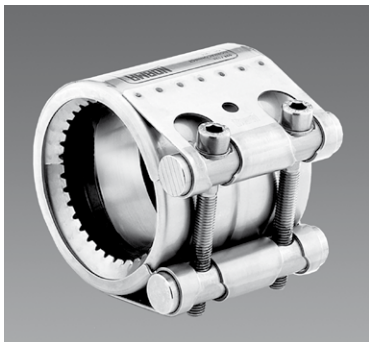

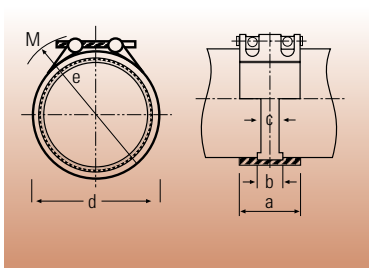

Connect-G Inox coupling

DN	a	b	c	d≈	e≈	item no.
50	78	29	17	85	105	234843
70*	98	40	25	100	120	234844
80	98	40	25	105	125	235482
100	98	40	25	130	150	234845
125	115	50	35	165	195	234846
150	115	50	35	185	215	234847
200	140	67	35	240	270	234848
250	140	67	35	305	335	234849
300	140	67	35	360	390	234850
400	142	67	35	460	490	234851
500	142	67	35	565	595	234852
600	142	67	35	665	695	234853

* obsolete model, ≈ maximum dimensions after installation

Coupling with axial restraint for installation in the soil or outside of buildings
Attention: particularly aggressive soils may call for an additional corrosion protection (e.g. shrinking hose)

Material metal collar:	casing austenitic stainless steel 1.4571, claw ring 1.4310, as per EN 10088
Material locking parts:	bolts 1.4401, screws 1.4404 as per EN 10088
Material sealing:	EPDM
Axial restraint:	DN 50–400: up to 10 bar; DN 500: up to 6 bar; DN 600: up to 4 bar
Screw size:	DN 50: M 8; DN 70–100: M 10; DN 125–150: M 12; DN 200–600: M 16
Torque:	as stated on the coupling

Installation instructions see page 83.

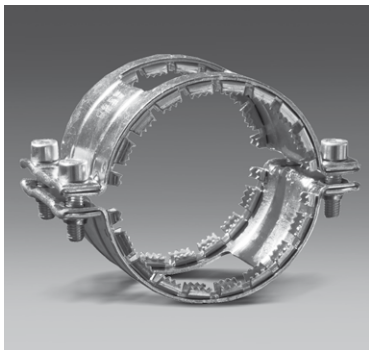

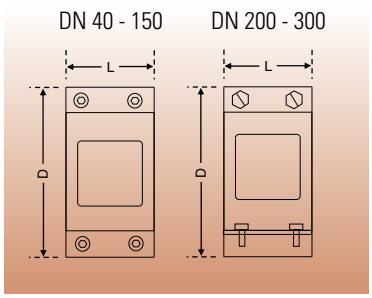

D = outer diameter of the closed grip collar including bars

! OUR RECOMMENDATION !

FOR INCREASED INSIDE PRESSURE

Düker Kombi grip collar

DN	D	L	item no.
50	124	72	235360
70*	146	74	235361
80	149	72	235498
100	180	85	235280
125	210	98	235315
150	230	98	235316
200	287	111	235281
250	367	130	216888
300	419	130	100304

Security collar with axial restraint for all Rapid and CV/CE couplings

Material metal collar:	galvanised steel
Material locking parts:	galvanised steel, yellow chromated 8 µ 8.8
Axial restraint:	DN 50–100: up to 10 bar; DN 125–150: up to 5 bar; DN 250–300: up to 1 bar
Screw size:	DN 50–80: round head screws with hexagon socket with washers M 8 x 30; DN 100–150: round head screws with hexagon socket with washers M 10 x 35; DN 200: hexagonal screw with washers and self-locking nut galvanised M 10 x 30, DN 250-300: M 12 x 30
Torque:	DN 50 and 70: 18–20 Nm; DN 80: 20–23 Nm; DN 100–125: 30–35 Nm; DN 150: 33–35 Nm; DN 200: 40–50 Nm, DN 250–300: 50–55 Nm

Installation instructions see page 84.



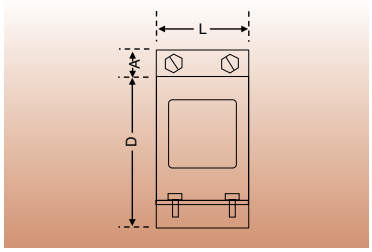

Düker grip collar

DN	A	D	L	item no.
400	30	460	160	100305

Security collar with axial restraint for CE dual ring coupling

Material metal collar:	galvanised steel
Material locking parts:	galvanised steel
Axial restraint:	up to 1 bar
Screw size:	hexagonal screw with washers and self-locking nut galvanised M 12 x 40 5.6
Torque:	65–70 Nm

Installation instructions see page 84.



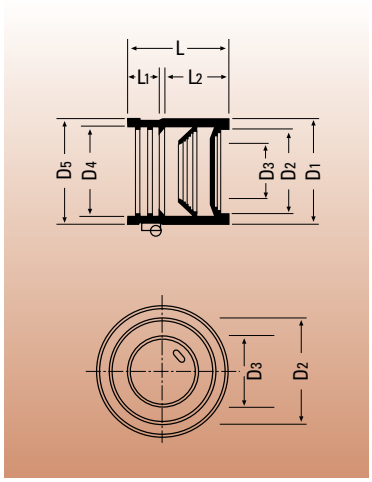

Düker EK Fix coupling

DN	D_1	D_2	D_3	D_4	D_5	L	L_1	L_2	Ø connection	item no.
50	72	56	30	57	67,5	63	19	40	40–56	100270
70*	92	75	41	77	86,5	77	19	52,5	56–75	100271
80	108	75	41	81	91	83	20	52,5	56–75	236756
80**	108	90	57	81	91	83	20	55	75–90	235346
100	128	110	78	108	118	95	21	65	104–110	100272
125	145	125	90	132	145	103	26	72	125	100273

* obsolete model

** reducing DN 90 plastic pipe to DN 80 cast iron pipe is only admissible on a WC connection bend, but not in all countries.!

For connecting pipes of PE-HD/PP to cast iron sewage pipes

German Approval no.:	Z-42.5-299
Material:	EPDM
Material locking parts:	W2, worm thread clamp stainless steel 1.4016, screw free of chrome (VI)
Axial restraint:	–
Screw size:	cross-slit screw, width 7
Torque:	ca. 2 Nm
Insertion lengths:	DN 50: 42 mm; DN 70: 55 mm; DN 80: 55–60 mm; DN 100: 65 mm; DN 125: 75 mm

Installation instructions see page 86.



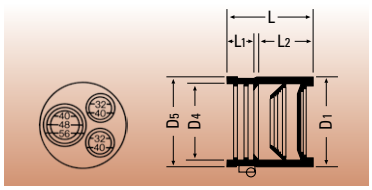

Konfix Multi coupling

DN	D_1	D_2	D_3	D_4	D_5	L	L_1	insertion	item no.
100	134	connections see illustration		108	116	90,5	35,5	40	100030

For connecting pipes of other materials to cast iron sewage pipes, up to three connecting pipes

German Approval no.:	Z-42.5-240
Material:	EPDM
Material locking parts:	worm thread clamp stainless steel 1.4016, screw galvanised steel
Axial restraint:	–
Screw size:	worm thread screw SW7
Torque:	5.0 + 0.5 Nm

Installation instructions see page 86.

For further connection possibilities from plastic pipelines to SML please consider e.g. the Mücher adapter coupling MAC, www.muecher.com.



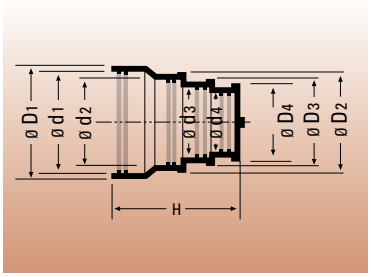

Multiquick coupling

DN	Ø D_1	Ø D_2	Ø D_3	Ø D_4	Ø d_1	Ø d_2	Ø d_3	Ø d_4	H	item no.
100 x 70	117	111	101	81	108	104	93	74	107	234859

Transition coupling for socketless cast iron sewage pipes DN 100 or old cast iron socket pipes DN 100 with an exterior diameter of max. 115 mm to other materials with an exterior diameter of 72 - 110 mm.

German Approval no.:	Z-42.5-240
Material:	EPDM
Material locking parts:	worm thread clamps stainless steel 1.406, screw galvanised steel
Axial restraint:	–
Screw size:	worm thread screw SW7
Torque:	5.0 + 0.5 Nm

Installation instructions see page 87.



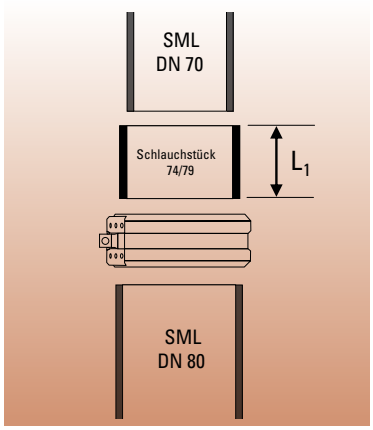

Transition coupling

DN	D≈	H≈	L	L_1	item no.
70 x 80	96	107	47	30	235347

≈ maximum dimensions after installation

Transition coupling for socketless cast iron drainage pipes and fittings DN 70 and DN 80

Material metal collar:	W2, stabilised stainless steel, 14510/11 as per EN 10088
Material locking parts:	lock 1.4301, screw, washer, square nut galvanised, yellow-chromated
Material sealing:	EPDM
Axial restraint:	–
Screw size:	M-8-screw with 6 mm hexagon socket
Torque:	10 – 20 Nm

Installation instructions see page 88.

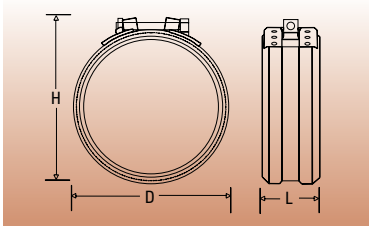



Düker Fire protection coupling BSV 90						
DN	A≈	B≈	C	D≈	core drilling≈	item no.
80	106	115	135	125	160	237693
100	133	145	135	140	180	237694
125	160	175	150	155	200	237695
150	188	198	150	170	240	237696

≈ maximum dimensions after installation

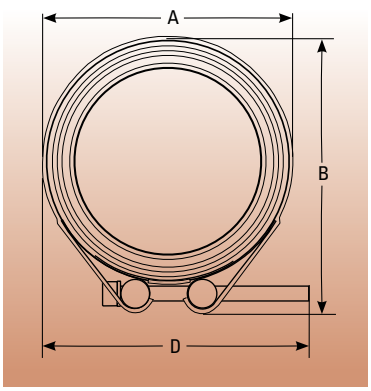

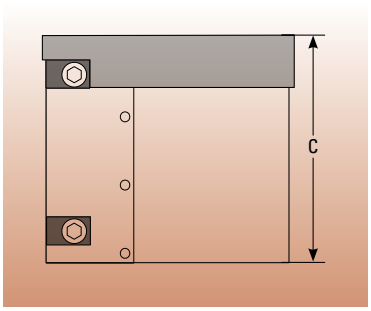

Two-screw coupling for installation in ceiling penetrations with fire rating

Fire resistance:	EI 90 as per classification report no. 0672-901 7132 000/Re/Pk of MPA Stuttgart
German Approval no.:	ABZ DIBt Z.19.17-1893
Material metal collar:	stabilised stainless steel, 1.4510/11 as per EN 10088
Material locking parts:	galvanised steel
Material sealing:	EPDM
Material plastic pipe insert:	PE-HD / PP
Material intumescence material:	expandable graphite on glass fibre fabric, intumescing at approx. 150°C
Axial restraint:	–
Screw size:	M8
Torque:	until the fastening heads come together; max. 18 Nm (DN 80) / 23 Nm (DN 100–150)

Installation of the coupling similar to Rapid couplings (see page 81). Fasten the screws alternately and evenly. The upper 20–40 mm with the intumescence material strip must be placed in the ceiling; the lower two thirds must protrude below the ceiling (see page 28).

SML couplings: recommended application areas

		Nominal size DN	axial restraint up to ... bar	in the building	in concrete	in the soil	outside of building	flat roof drainage (siphonic system)	connection to plastic roof drain	connection to plastic pipes
1.	Dükorapid® coupling	50–200*	0,5	■	■			■		
2.	Dükorapid® Inox	50–200*	0,5			■	■	■		
3.	Rapid Inox coupling	50–200*/250–300	0,5/0,3			■	■	■		
4.	Düker CV coupling	50–300	–	■	■					
5.	CE coupling	50–300	–	■	■					
6.	Düker CE dual ring coupling	400	–	■	■					
7.	Connect-F Inox coupling	100–600	–			■	■			
8.	Connect-G Inox coupling	50–400/500/600	10/6/4			■	■	■		
9.	SVE coupling	50–200	–			■				
10.	Düker EK Fix coupling	50–125	–	■					■	■
11.	Multiquick coupling	100	–			*			■	■
12.	Düker Kombi grip collar	50–100/125–150/200/250–300	10/5/3/1	■	■	■		■		
13.	Düker grip collar for CE dual ring cpl.	400	1	■	■	*				

In case of unclarity please consult with the factory

*DN 200: grip collars of changes of direction

* with corrosion protection e.g. petrolatum tape of company Denso (DENSO® plast, possibly together with DENSO® Mastic PF)



03 Installation Instructions

Assembling and Installation Instructions for Düker Couplings

Waste water and ventilation pipelines are on principle sloping pipelines without interior pressures. However, it is not impossible for pressure to develop in the pipelines under certain circumstances.

The installation standard says the following:

EN 12056-1, section 5.4.2, water and gas tightness:
Drainage systems shall be water and gas tight against the operational pressures. Pipework systems installed inside buildings shall not release vapours and foul air into the building.

EN 12056-5, section 6.3, fixing and supporting:
Pipelines with joints, which allow longitudinal movement, shall be fixed and/or supported in such a way as to ensure that during service the joint cannot become unintentionally disconnected. Reaction forces shall be considered

According to EN 877 (product standard), section 4.7.5 water tightness, couplings may not exhibit any visible leakage under test conditions with hydrostatic inside pressure, under the following conditions:

- all tests are done in a strain-relieved state, i.e. the pipes are secured against excessive axial displacement
- joints up to and including DN 200, aligned or deflected up to 3°: up to 5 bar
- joints surpassing DN 200, aligned or deflected up to 1°45': up to 3 bar
- joints subject to shear force of 10 DN in newtons, aligned: up to 1 bar
- joints which will only carry limited pressures because of the intended use and installation, aligned or deflected up to 3°: up to 0.5 bar.
- joints connecting to sanitary ware: up to 0.1 bar

As these tests are carried out while the pipes are secured against axial displacement, these test pressures cannot be applied directly to installations in a building. For the actual application, rather than the pressure tightness, what counts is the thrust resistance or axial restraint of the couplings, or the information what measure can be taken in order to obtain the required axial restraint. These measures can be grip collars, fixings, abutments etc. The table of page 76 gives the required information.

Installation instructions and admissible pressure loads on Düker SML couplings

Special requirements are to be considered for drainage pipelines which can be exposed to higher inside pressures than 0.5 bar. This concerns e.g.

- pipelines in the back water area
- overload areas of rain water pipelines inside buildings
- pipelines of a siphonic system
- waste water pipelines leading through several basement storeys without further outlets
- pressure pipelines at waste water pumps

Pipelines in the Back Water Area

Pressure that is caused by a backflow from the canalisation can make connections slip. Therefore pipelines below the back water level must be treated as follows:

Waste water up to 0.5 bar: On Düker Rapid couplings DN 100 to DN 150, no additional measures are required. On Düker Rapid couplings DN 200, changes of directions must be secured with appropriate Düker grip collars.

Waste water above 0.5 bar: All Düker couplings must be secured with appropriate grip collars.

Waste water pipelines connected to a mixed water canalization: All Düker couplings must be secured with appropriate grip collars.

Gravity Drainage Rainwater Pipelines

EN 12056-3, section 7.6.4 says:
Internal rainwater pipes shall be able to withstand the head of water likely to occur in the event of a blockage.

In vertical rainwater stacks open above, the water column cannot exert any axial forces even in case of a blockage. Here, the pipes need only be secured against sideways movement out of the axis, through sufficient fixing.

Collection and connection lines below the roof do not need any securing with grip collars either.

However, at offsets in the rainwater stack, at changes of direction, in the lower part of rainwater collection lines as well as pipeline sections in the back water area, the couplings must be secured with appropriate grip collars.

If special information for high-risers should be required, please ask for our Technical Specifications waste water or rain water in high-risers.

Siphonic Drainage Systems

Please refer to pages 98 to 101.

Waste Water Pipelines Leading Through Several Basement Storeys

If there are no outlets over the length of several storeys, the pressure conditions correspond to those of a gravity drainage rainwater pipeline, and the same measures are to be taken.

Pressure Pipelines at Waste Water Pumps

Pressure pipelines can be made of Düker cast iron drainage pipes and fittings with Rapid couplings and Kombi grip collars up to DN 100. As an alternative Connect-G couplings DN 50 – 400 can be used. The admissible pressure load is max. 10 bar in both cases. The reason for the assumption of 10 bar pressure load is that when the pump is switched off, there are often pressure peaks that can be much higher than the normal pump pressure. In order to reduce these pressure peaks, it is recommendable to have floating backflow preventers with a counter weight available from suppliers of waste water pumps.

On principle it is necessary to have compensators in order to prevent the waste water pump's vibrations from being transmitted onto the pressure pipe. The fixings must be carried out in accordance with the Düker instructions. Pipe clamps should be mounted either direct to the wall or ceiling or in case of larger distances onto corresponding rails or supports. The clamps must be fixed with M16 rods.

Reducers may not be installed directly at the pressure outlet (elastic pipe coupling) of the waste water pump.

In case of doubts on the pressure line we recommend to consult us or the manufacturer of the pump.

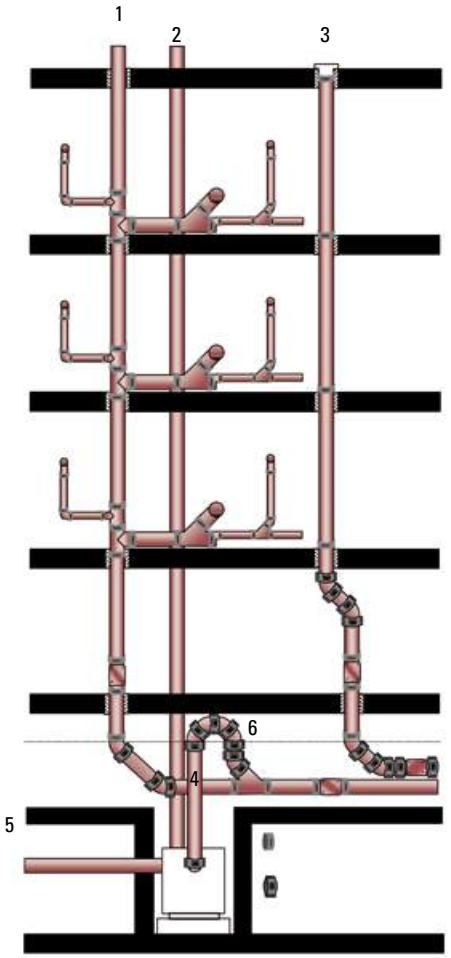

1 = waste water pipeline with main ventilation system

2 = ventilation waste water pump

3 = gravity drainage rain water pipeline

4 = waste water pump

5 = adduction waste water pump

6 = pressure line waste water pump

street level
= back water level
(in general)

= Düker Rapid coupling

= Rapid coupling with grip collar

Dükorapid® Coupling / Dükorapid® Inox Coupling / Rapid Inox Coupling



Dükorapid®/ Dükorapid® Inox Coupling



Rapid Inox Coupling

Installation Instructions:



1. Slide the complete coupling onto the end of the pipe or fitting, up to the central ring of the sealing.



2. Push the second pipe or fitting into the other end of the coupling.



3. Tighten the hexagon socket screw with a screw wrench, a ratchet or a customary powered screw driver.

   Dükorapid® DN 50 – 150: 18 Nm;
   DN 200: 28 Nm. If the locks should come together do not tighten any more

   Rapid Inox: until both fastening heads come together

Installation Instructions Rapid Inox DN 250-300:



1. Slide the rubber sealing onto the pipe, up to the central ring of the sealing.



2. Push in the second pipe end or fitting and set it onto the central ring.



3. Lay the metal collar around the sealing. The collar may be opened no more than twice onto a width of 120% of the pipe outside diameter.



4. Insert the bolt head with the washer disc into the fastening head.



5. Tighten the hexagon socket screw with a screw wrench, a ratchet or an impact wrench until both fastening heads come together.

CV Coupling / CE Coupling



CV coupling



CE coupling

Installation Instructions:



1. First of all, push the sealing collar onto the lower pipe end so that the inner sealing ring rests on top of the cut edge of the pipe.



2. Fold over the upper half of the sealing collar.



3. Place the next pipe or fitting even onto the inner ring and fold back the sealing collar.



4. Wrap the metal sleeve around the sealing collar and alternately tighten both bolts. The plates must push together parallel in order to avoid deformation.

DN 50–80:	6–8 Nm
DN 100–150:	10–12 Nm
DN 200–300:	15–20 Nm

Connect-F Inox / Connect-G Inox



Connect-F: not resistant to axial forces; pressure-resistant up to 10 bar if the axial forces are absorbed by anchorage.



Connect-G: resistant to axial forces up to 10 bar

Installation Instructions:

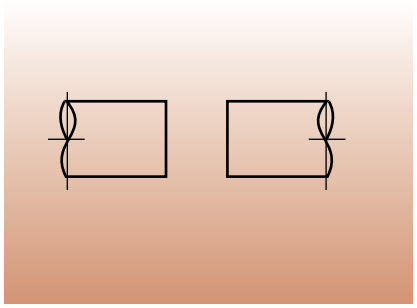

1. Remove any burrs and clean the pipe ends thoroughly in the sealing zones.

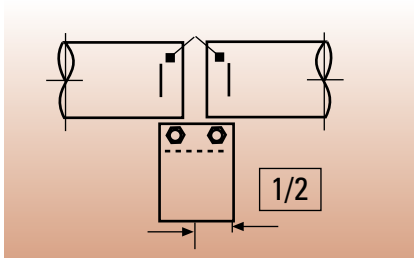

2. Mark half the coupling's width on both pipe ends.

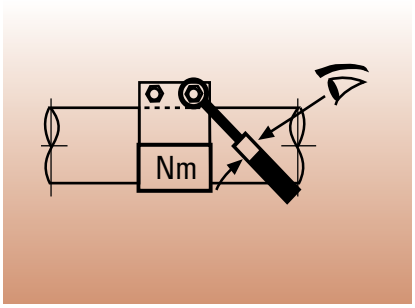

3. Slide the coupling on one pipe and push the other pipe end into it. Align the coupling between the marks. Tighten the bolts loosely and alternately with a ratchet spanner or an Allen key. Connect-G may not be twisted after the teeth have engaged with the pipe. Tighten the bolts alternately with the torque wrench in accordance with the torque stated on the type plate (see coupling).

Düker Kombi Grip Collar / Düker Grip Collar



Düker Kombi grip collar
Security collar with axial restraint for all Rapid, CV and CE couplings at more than 0.5 bar internal pressure



Düker grip collar DN 400

The axial force resistance necessary for SML pipes and fittings is obtained by the added protection of the coupling with a grip collar.
These security collars with axial restraint take up the reaction forces which may occur at an internal pressure load of up to 10 bar (see table) = 100 m water column. This means: the SML pipes and fittings which are connected with a coupling and additionally with a grip collar are protected against slipping due to internal pressure without need of a special fastening to the solidium at the connections. If pressures up to 0.5 bar are to be expected, it is sufficient to protect the coupling at changes of direction, e.g. with a grip collar, or to use Rapid couplings.
If pressures of more than 0.5 bar are to be expected, all Rapid, CV and CE couplings in the pressure-stressed areas are to be secured with grip collars unless the pipe components are otherwise secured thrust-resistant.

Installation instructions

1. The claw segments must evenly wrap around the pipe couplings. Therefore screw the segments together loosely at first and watch out that the claw inserts do not touch the metal collar of the coupling.

2. Then alternately crosswise tighten the screws or nuts, so that the fastening parts are drawn together parallel and with the same distances. Adhere to the torques stated in the table for each screw, even if the fastening parts already touch at inferior torques.

item	DN	axial restraint up to ... bar	no. of segmentse	screws	screw dimension	torque Nm
Düker Kombi grip collar	50	10	2	round head screws with hexagon socket with washers*	M 8 x 30	18–20
	80	10	2		M 8 x 30	20–23
	100	10	2		M 10 x 35	30–35
	125	5	2		M 10x40	30–35
	150	5	2	hexagonal screw with washers* and selflocking nut	M 10x40	33–35
	200	3	3		M 10x30	40–50
	250	1	3		M 12x30	50–55
	300	1	3		M 12x30	50–55
Düker grip collar	400	1	4	hexagonal screw with washers* and selflocking nut	M 12	65–70

* important: do not forget to insert the washers under the screw heads and nuts!

SVE Coupling



Push-in coupling for underground pipes. Double socket in polypropylene-CO with two sealing lips in NR-SBR.

Installation instruction:

1. Make sure that the sealing rings completely lie in the bead evenly
2. Clean pipes and fittings at the connection areas
3. Paint the ends of the pipes with a lubricant for elastomere seals (soap solution and dishwashing detergents but no oil or grease)
4. Place the push-in coupling onto the cut edge of the pipe and push on the pipe against the stop by jerks and jolts and gentle tilting.
5. Also paint the connecting pipe with a lubricant and push against the stop in the same way as described above.
6. A spade may be of help as a lever for installation in a pipe trench. A squared timber laid across the pipe outlet strengthens the transverse load in axial direction.
7. The fittings may be equipped with the necessary couplings before installation. This makes final installation easier and faster.

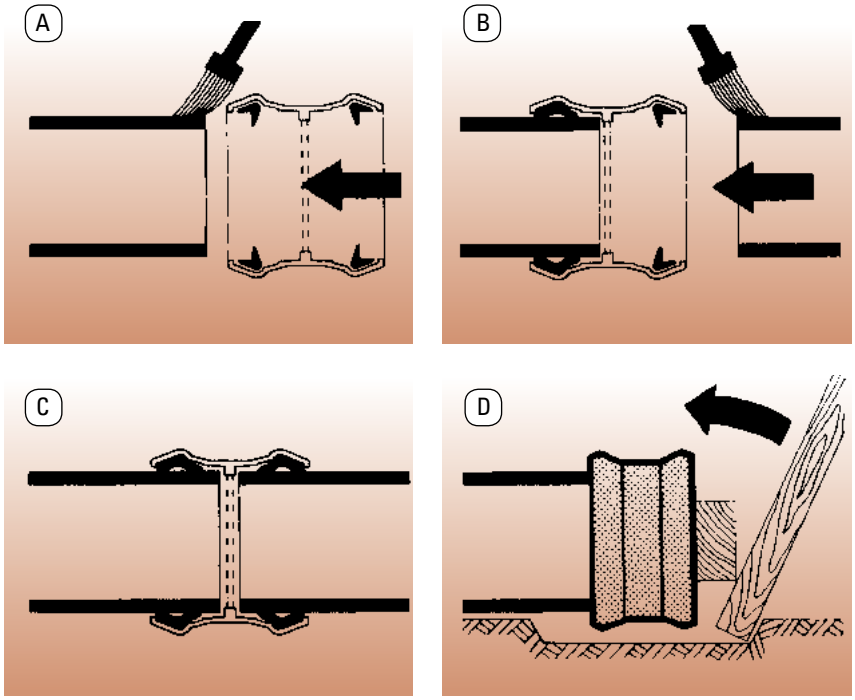

Attention:
Straight pipelines must be covered with soil in order to prevent lateral movement. At changes of direction and branches, concrete anchorage is required to withstand internal pressure (during pressure testing and normal operation).

It is imperative to choose the correct cast iron pipe material for underground installation: a zinc-coated pipe system (TML, MLB or MLK-protec), as EN 877 only allows pipes with adequate outside coating to be installed in the soil.

Düker EK Fix Coupling / Konfix Multi Coupling



Düker EK Fix Coupling

With the Düker EK Fix coupling, pipes and drainage pieces of PP as per EN 1451-1 and DIN 19560-10 as well as PE-HD as per EN 1519-1 and DIN 19535-10 can be connected easily and safely to SML pipes DN 50 to DN 125. The connecting pipe is securely in place thanks to the double lip sealing and large insertion depths.
Material: hot water resistant synthetic rubber EPDM. The Düker EK Fix couplings DN 100 and DN 125 are especially suited for connecting plastic roof drains.



Konfix Multi Coupling

SML pipe DN	connecting pipe outside-Ø	insertion depth
50	40–56 mm	42
70	56–75 mm	55
80	56–75 mm	55
80	75–90 mm	60
100	104–110 mm	65
125	125 mm	75

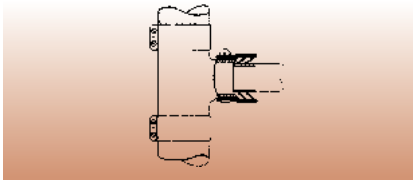

Installation instructions:

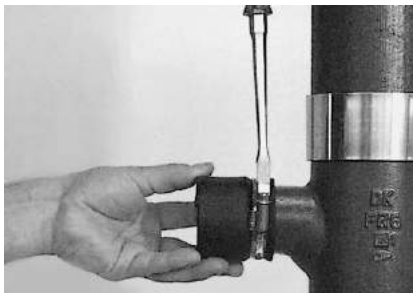

1. Push the Düker EK Fix coupling with opened clamp onto the SML pipe against the stop, then secure to the pipe with the clamp.



2. Grip the projecting rubber neck with a pair of tongs and carefully pull it out so that the opening is set free.

(Konfix Multi coupling only: use a knife to cut into the grooved front, choosing the groove according to the exterior diameter of the connecting pipe, and without injuring the sealing lip underneath, and open)

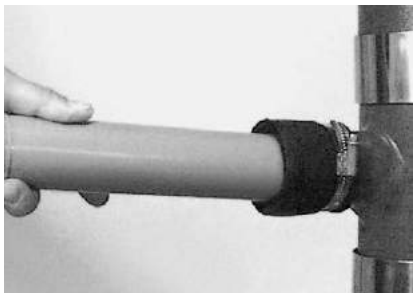

3. Mark the connecting pipe at the depth of insertion, apply lubricant and insert into the coupling.

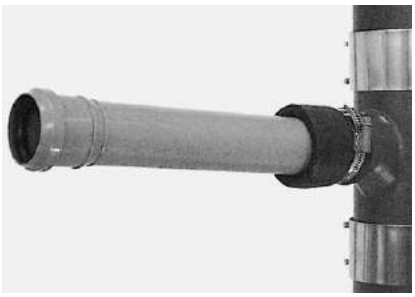

4. The plastic pipe used illustrates the installation process.
Attention: Please observe the table of acceptable outside diameters of pipes.

Attention:
The connecting pipe may have to be fixed in order to avoid slipping due to internal pressure.

Multiquick Coupling



Connection possibilities

Düker SML pipes and fittings DN 100 to inherently stable other materials with an exterior diameter of 72 up to 110 mm. Düker SML pipes and fittings DN 100 to cast iron socket pipes DN 100 with an exterior diameter up to 115 mm. The coupling is delivered with two identical worm thread clamps, which are both adequate for the large diameter tolerance.

Installation instructions:

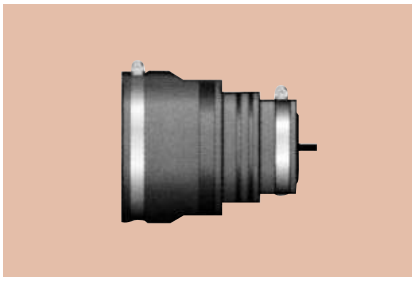

1. Push the open end of the Multiquick coupling over the cast iron pipe end and position the worm thread clamp in the groove intended for it. Then tighten the worm thread clamp without displacing it. Use a knife to cut open the closed side or to cut the coupling back according to the outer diameter of the connecting pipe. Cut the coupling in front of the step to the required diameter.

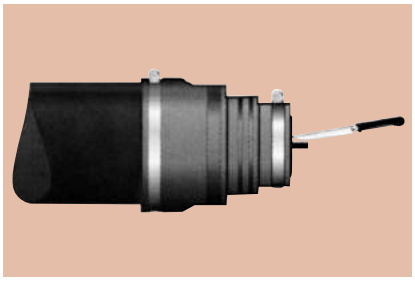

2. Now slide the second worm thread clamp over the connecting pipe, push the pipe into the Multiquick coupling and tighten the worm thread clamp in the intended position.

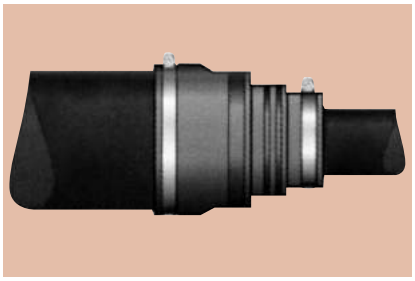

3. Watch out for a flawless and clean sealing zone on the pipes or fittings. Paint lumps or mortar must be removed completely with sand paper. The worm thread clamps must be tightened exclusively by hand with a screw driver in order to avoid damages to the Multiquick coupling.

Attention:

The connecting pipe may have to be fixed in order to avoid slipping due to internal pressure.

Transition Coupling DN 70 – DN 80 for SML-Pipe Systems as per DIN EN 877 and DIN 19522



Application
Transition coupling for SML pipe systems as per EN 877 DN 70 to DN 80 (also called DN 75/80).

Material
metal collar stainless steel
material no. 1.4510/11 W2
EPDM rubber

Attention:
The transition from DN 80 to DN 70 in the flow direction is only admissible for repair and modernization of old DN 70 lines where DN 70 is no longer available.

Installation instructions:



1. Push the Dükorapid® coupling DN 80 onto the SML pipe or fitting DN 80



2. Push hose 74/79 onto the SML pipe or fitting DN 70



3. Push SML-pipe DN 70 with the hose into the coupling DN 80



4. Tighten the screw on the Dükorapid® coupling (10 – 20 Nm)



04 Design and Pipe Laying

Cutting Pipes

Düker hubless cast iron drainage pipes can be cut readily with the following tools:

1. Exact PipeCut pipe saw

This pipe saw ensures a precise, fast and safe cut without flying sparks and hot chips.





1. Belt saw

Portable belt saws cut pipes perfectly





2. Powered disc cutter

The best results with a powered disc cutter can be achieved with a disc appropriate for cast iron and a guidance as shown





3. Wheel cutter

For use without electricity





Düker cast iron drainage piopes are supplied in standard lengths of 3m. These pipes can be cut on site to the requried length.

An excellent tool is the Exact PipeCut pipe saw, e.g. the Exact PipeCut 170E. For more information please consult the web page www.exacttools.com.

Electric belt saws with clamping device also give very good results without flying sparks.

Powered disc cutters with discs for cast iron should only be used with guidance devices, where the pipe is held and moved safely, and a right-angled cut is guaranteed.

Another possibility are wheel cutters e.g. by Ridgid or Virax, which also ensure right-angled cutting.

It is important that the cut is always at a right angle to the pipe axis.

Attention:
Change the cutting discs and saw belts regularly!

Cut edge protection

Where an on-site coating of the cut edges is desired or specified, we recommend to use the SML edge protection. It is applied fast and safely in the form of a fast drying spray.

spray can 400 ml, sufficient for approx. 60 cuts DN 100
item no. 240373



Attention: the cut edges of MLK-protec may only be protected with the pro-cut tape!

Imbedding Cast Iron Pipes in Concrete

On principle, cast iron drainage pipes can be imbedded in concrete. The cast iron expansion coefficient practically corresponds to that of concrete. As concrete passivates iron, no special protection against corrosion is necessary for SML pipelines as well as couplings. The standard single screw or twin screw couplings can be used. The pipes must be surrounded by 5 cm concrete all around. When imbedding the pipeline in concrete and during prior pressure testing of the pipeline, considerable forces may occur. In addition, when imbedding in base plates usually only little declivity is available and therefore the pipeline must be perfectly adjusted. The arising forces (which would be the weight including the water filling) should be taken in with brackets and transferred to the lower concrete, soil or the intended reinforcement. Use of threaded rods simplifies the arrangement of the usually short descent. The pipeline will tend to float to the surface when pouring in concrete. Therefore it must be secured with brackets. We recommend to fill the pipeline with water before imbedding it in concrete. If SML pipelines are imbedded in waterproof concrete bottoms, it is usually expected that the concrete must surround the pipe all around with 20 cm. If many fittings are strung together and therefore bracket fastening is not possible, then grip collars will have to be used.

Imbedding SML main pipelines in the concrete bottom is recommended for:

1. high groundwater level

Advantage:
- the number of pipe penetrations through the waterproof floor plate is reduced.
- the pipeline itself is protected against any possibly aggressive groundwater.

2. non-bearing ground

Advantage:
- not having to carry out the necessary floor exchange or floor improvement and saving costly constructions for fastening of the pipe lines below the floor plate.

If the thickness of the concrete slab is insufficient for installing the pipeline, the concrete slab must be reinforced at this point with a concrete haunch.

Expansion gap

In order to avoid any differences in settling, joints made up of pipe cuttings (0.5 - 1.0 m) are arranged at the expansion gaps. These pipe cuttings are placed movable with help of a pipe lining or a polystyrene casing. According to EN 877, the permitted angling of SML couplings for the nominal widths is approximately: up to DN 200 3 cm/m DN 250 - 500 1.5 cm/m overall length.

A predetermined breaking point (notched or cut through) is to be added to the pipe lining where the expansion gap is. Trickling of concrete into the cut-through pipe lining should be avoided by sealing with adhesive tape. It should also be sufficiently fastened in order to avoid slipping.

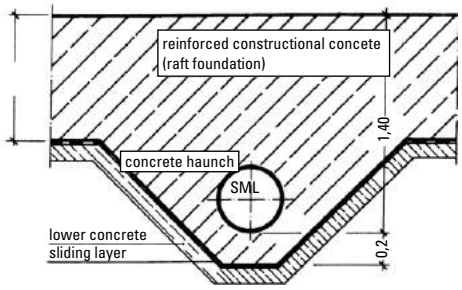

Haunch in a concrete slab

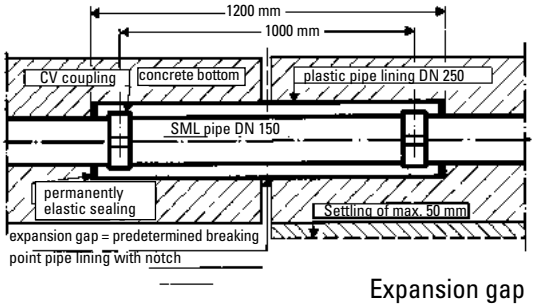

Expansion gap

Underground Installation of Cast Iron Drainage Pipelines

For underground installation of pipes please consult EN 1610 and EN 752.

Selection of Material

SML is not suitable for underground installation, use instead pipes with outside zinc coatings such as TML, MLK-protec or MLB. Regarding couplings, only "Inox" couplings or the SVE coupling are admissible. All other metal couplings require an additional corrosion protection. For this additional protection, we recommend a petrolatum-based tape such as DENSO® Plast, if necessary combined with a petrolatum-based mastic such as DENSO® Mastic PF (available from company Denso, www.denso.de).

Pipe Bedding

The standard EN 1610 contains details on the pipe trench, the trench bottom and the pipe bedding in various types of soil. The positive material characteristics of cast iron pipes permit the pipelines to be laid directly on the trench bottom in non-cohesive soil. The pipe bedding is created by underfilling and compacting with non-cohesive, compactable material. For the couplings, dig out hollows of sufficient size in the trench bottom.

Soil Grades as per DVGW

The aggressiveness of soils can be determined as per the German DVGW worksheet GW9.

Leak Test

When underground pipelines are installed or modified, they must be tested for water tightness. The actual acceptance test is done after filling in the trench. For your own safety we recommend to carry out and additional pressure test before filling in the trench. Obviously this allows you to react to possible leakages without re-opening the trench.

For the test duration and filling of the pipelines, EN 1610 gives detailed instructions. The pipeline components need to be secured against slipping and moving (during pressure test and during operation), in particular at changes of direction. The reaction forces that can occur need to be considered while laying the pipeline. This means that the straight lines – except the couplings – should be covered up to prevent movement. At changes of directions and branches, pipes and fittings need to be secured, e.g. with grip collars, concrete abutments or similar.

For detailed information about underground installation please consult the MLK-protec Specifier's Manual.

Installation Outside of Buildings

When SML pipelines are installed outside, e.g. rain water drain pipes, their outside surfaces are to be overcoated for a durable resistance to weather influences. Use corrosion protection coatings suitable for metal surfaces.

A corresponding overcoating is also to be recommended for installation in other areas with elevated humidity, or in aggressive environments.

Maintenance and Pipe Cleaning

On principle, installation must already be carried out in a way that obstructions are prevented. If cleaning should nevertheless be required, we recommend cleaning with a high-pressure cleaning device.

Cleaning with mechanical pipe cleaning tools is not to be recommended due to the possibility of damages to the inside coatings.

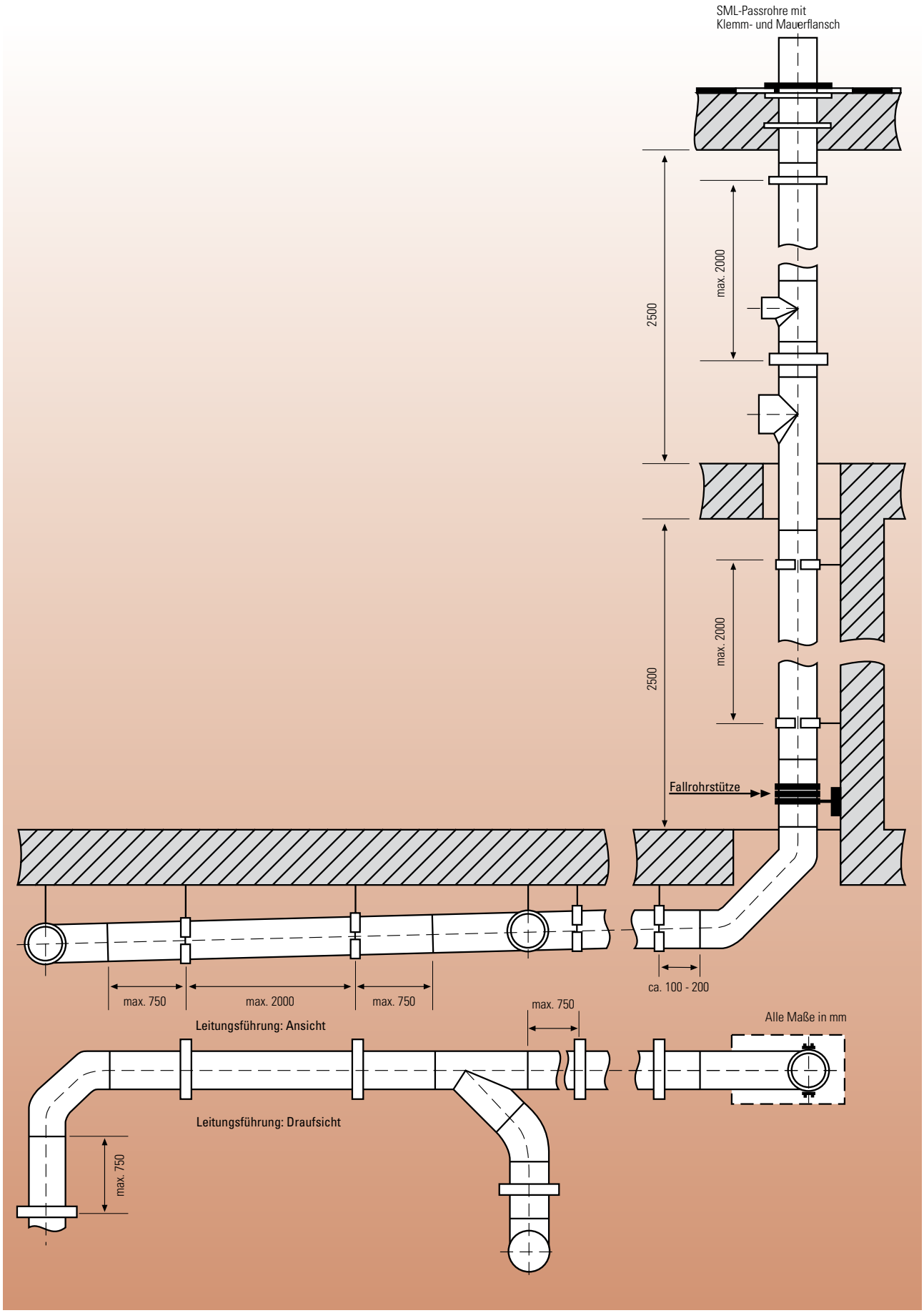
SML-Passrohre mit
Klemm- und Mauerflansch
max. 2000
2500
max. 2000
2500
Fallrohrstütze
ca. 100 - 200
max. 750
max. 2000
max. 750
Leitungsführung: Ansicht
max. 750
Alle Maße in mm
Leitungsführung: Draufsicht
max. 750

Fixing SML Pipes

General rules

The distances of the fixings should be even and should not exceed a length of 2 m. 2 to 3 m long pipes should be fixed twice - short pipes, according to the nominal width (or pipe weight) should be fixed once or twice. Fixing is to be carried out in regular distances between the couplings whereas the distance before and after each coupling should not be larger than 0,75 m.

Horizontal pipes must be securely fastened at all changes of direction and branches. Pipes which are pendant-fixed are to be secured against any type of movement in distances of 10 to 15 m with special fixed-point holding devices. This guarantees an excellent directional stability and avoids pushing out of the planned direction by other subassemblies.

Down pipes are also to be fastened at a maximum distance of 2 m. If a storey is 2.50 m high, then fastening is needed twice per storey, among that once directly at all branches that may be installed.

Brackets

Use the customary pipe brackets with the corresponding fastening elements and supports. We recommend brackets with threaded connections M12 for SML pipes DN 50 to 150 - possibly M 8 for SML pipes up to DN 100. Rain water pipes and SML pipes under pressure should be fastened with brackets with threaded rods M 16. It might be useful to consult the manufacturer of pipe fixings.

SML down pipe supports should be fastened as close to the wall as possible in order to avoid large bending moment to the brackets. It is recommended to use a mounting console and the SML bearing ring for down pipe support.

Down pipe supports must carry the weight of the down pipe and should be fastened at the lowest possible point. They can carry as much vertical length as the wall can carry and the plugs can transmit to the wall. After this height, a further down pipe support is to be arranged.

In general we recommend to install a down pipe support in down pipes of DN 100 or larger above the basement ceiling, and further down pipe supports in intervals of 5 storeys.

SML pipes under pressure

Waste water pipes without thrust-resistant couplings must be secured against separation or slipping from the axis if internal pressure loads are to be expected. The demanded axial restraint can be obtained by thrust-resistant grip collars (see table on page 76).

Fixing and Noise Protection

For the observing of noise protection requirements, the choice of bracketry is decisive. Standard brackets with rubber insert are normally sufficient. For more information please refer to page 32 to 34.

Electrical Continuity

In some countries equipotential bonding, i.e. earthing of all exposed metallic items in a building is required.

Unlike welded metallic pipelines, a SML installation is not automatically earthed. The rubber lips inside the couplings prevent any direct contact between pipes and fittings.

Electrical continuity can be obtained by using suitable couplings. Couplings such as the Dükorapid® couplings, whose metal collars grip the pipe itself, can serve to provide electrical continuity along the installation, under condition that the electrical resistance of the installed coupling is not too high.

The British national annex NA8 to EN 877 provides a test method and maximum electrical resistance for couplings:

NA 8 Electrical continuity
The (EN 877) Standard does not accommodate electrical requirements, for such requirements BS 6087 amendment 2 should be referenced. The text of BS 6087 amendment 2 is reproduced below:
"If provision is made for electrical continuity, the electrical resistance of the coupling shall not exceed 0.3 ohms, when tested in accordance with the following procedure:

Apply a steadily increasing voltage not exceeding 50 V ac, 50 Hz., across the junction until a steady current of 25 ± 1 A flows through the coupling. Allow the current to flow for 30 s, maintaining it as necessary by adjusting the voltage. Calculate the resistance of the coupling by dividing the observed voltage by the current."

The Dükorapid® coupling has been tested as per these requirements and was certified by the TÜV Rheinland, Cologne to observe the maximum allowed resistance of 0.3 ohms. In fact, the resistance measured was only around 0.01 ohms. Continuity clips or similar devices are not required on the Dükorapid® coupling. If required please request the corresponding test report from Düker.

Please note that CV couplings are not suitable for providing electrical continuity. If CV couplings or similar couplings have been used, electrical continuity may be obtained by installing grip collars over them or by connecting an accompanying earthing cable to each pipe, fitting and coupling.

Filling level 50 % (h/d = 0,5)

SML	DN 70		DN 80		DN 100		DN 125		DN 150		DN 200		DN 250		DN 300	
	d_i=71		d_i=75		d_i=103		d_i=127		d_i=152		d_i=200		d_i=263		d_i=314	
J	Q	V	Q	V	Q	V	Q	V	Q	V	Q	V	Q	V	Q	V
cm/m	l/s	m/s	l/s	m/s	l/s	m/s	l/s	m/s	l/s	m/s	l/s	m/s	l/s	m/s	l/s	m/s
0,5	0,8	0,4	0,9	0,4	2,1	0,5	3,7	0,6	6,0	0,7	12,5	0,8	25,8	1,0	41,3	1,1
0,6	0,9	0,4	1,0	0,4	2,3	0,6	4,1	0,6	6,6	0,7	13,7	0,9	28,3	1,0	45,3	1,2
0,7	0,9	0,5	1,1	0,5	2,5	0,6	4,4	0,7	7,1	0,8	14,8	0,9	30,6	1,1	48,9	1,3
0,8	1,0	0,5	1,1	0,5	2,7	0,6	4,7	0,7	7,6	0,8	15,8	1,0	32,7	1,2	52,3	1,4
0,9	1,1	0,5	1,2	0,6	2,9	0,7	5,0	0,8	8,1	0,9	16,8	1,1	34,7	1,3	55,5	1,4
1,0	1,1	0,6	1,3	0,6	3,0	0,7	5,3	0,8	8,5	0,9	17,7	1,1	36,6	1,3	58,5	1,5
1,1	1,2	0,6	1,4	0,6	3,2	0,8	5,5	0,9	8,9	1,0	18,6	1,2	38,4	1,4	61,4	1,6
1,2	1,2	0,6	1,4	0,6	3,3	0,8	5,8	0,9	9,4	1,0	19,4	1,2	40,1	1,5	64,2	1,7
1,3	1,3	0,6	1,5	0,7	3,4	0,8	6,0	1,0	9,7	1,1	20,2	1,3	41,8	1,5	66,8	1,7
1,4	1,3	0,7	1,5	0,7	3,6	0,9	6,3	1,0	10,1	1,1	21,0	1,3	43,4	1,6	69,3	1,8
1,5	1,4	0,7	1,6	0,7	3,7	0,9	6,5	1,0	10,5	1,2	21,7	1,4	44,9	1,7	71,8	1,9
1,6	1,4	0,7	1,6	0,7	3,8	0,9	6,7	1,1	10,8	1,2	22,4	1,4	46,4	1,7	74,1	1,9
1,7	1,5	0,7	1,7	0,8	3,9	0,9	6,9	1,1	11,1	1,2	23,1	1,5	47,8	1,8	76,4	2,0
1,8	1,5	0,8	1,7	0,8	4,1	1,0	7,1	1,1	11,5	1,3	23,8	1,5	49,2	1,8	78,7	2,0
1,9	1,5	0,8	1,8	0,8	4,2	1,0	7,3	1,2	11,8	1,3	24,5	1,6	50,6	1,9	80,8	2,1
2,0	1,6	0,8	1,8	0,8	4,3	1,0	7,5	1,2	12,1	1,3	25,1	1,6	51,9	1,9	82,9	2,1
2,5	1,8	0,9	2,0	0,9	4,8	1,2	8,4	1,3	13,5	1,5	28,1	1,8	58,0	2,1	92,8	2,4
3,0	1,9	1,0	2,2	1,0	5,3	1,3	9,2	1,5	14,8	1,6	30,8	2,0	63,6	2,3	101,7	2,6

Filling level 70% (h/d=0,7)

SML	DN 70		DN 80		DN 100		DN 125		DN 150		DN 200		DN 250		DN 300	
	d_i=71		d_i=75		d_i=103		d_i=127		d_i=152		d_i=200		d_i=263		d_i=314	
J	Q	V	Q	V	Q	V	Q	V	Q	V	Q	V	Q	V	Q	V
cm/m	l/s	m/s	l/s	m/s	l/s	m/s	l/s	m/s	l/s	m/s	l/s	m/s	l/s	m/s	l/s	m/s
0,5	1,3	0,4	1,5	0,5	3,6	0,6	6,2	0,7	10,1	0,7	20,8	0,9	43,1	1,1	68,9	1,2
0,6	1,4	0,5	1,7	0,5	3,9	0,6	6,8	0,7	11,0	0,8	22,9	1,0	47,2	1,2	75,5	1,3
0,7	1,6	0,5	1,8	0,5	4,2	0,7	7,4	0,8	11,9	0,9	24,7	1,1	51,1	1,3	81,6	1,4
0,8	1,7	0,6	1,9	0,6	4,5	0,7	7,9	0,8	12,7	0,9	26,4	1,1	54,6	1,3	87,3	1,5
0,9	1,8	0,6	2,1	0,6	4,8	0,8	8,4	0,9	13,5	1,0	28,1	1,2	58,0	1,4	92,6	1,6
1,0	1,9	0,6	2,2	0,7	5,1	0,8	8,8	0,9	14,3	1,1	29,6	1,3	61,1	1,5	97,6	1,7
1,1	2,0	0,7	2,3	0,7	5,3	0,9	9,3	1,0	15,0	1,1	31,0	1,3	64,1	1,6	102,4	1,8
1,2	2,0	0,7	2,4	0,7	5,5	0,9	9,7	1,0	15,6	1,2	32,4	1,4	67,0	1,6	107,0	1,8
1,3	2,1	0,7	2,5	0,7	5,8	0,9	10,1	1,1	16,3	1,2	33,8	1,4	69,7	1,7	111,4	1,9
1,4	2,2	0,7	2,6	0,8	6,0	1,0	10,5	1,1	16,9	1,2	35,0	1,5	72,4	1,8	115,6	2,0
1,5	2,3	0,8	2,7	0,8	6,2	1,0	10,9	1,1	17,5	1,3	36,3	1,5	74,9	1,8	119,7	2,1
1,6	2,4	0,8	2,7	0,8	6,4	1,0	11,2	1,2	18,1	1,3	37,5	1,6	77,4	1,9	123,7	2,1
1,7	2,4	0,8	2,8	0,9	6,6	1,1	11,6	1,2	18,6	1,4	38,6	1,6	79,8	2,0	127,5	2,2
1,8	2,5	0,8	2,9	0,9	6,8	1,1	11,9	1,3	19,2	1,4	39,8	1,7	82,1	2,0	131,2	2,3
1,9	2,6	0,9	3,0	0,9	7,0	1,1	12,2	1,3	19,7	1,5	40,9	1,7	84,4	2,1	134,8	2,3
2,0	2,7	0,9	3,1	0,9	7,2	1,2	12,5	1,3	20,2	1,5	41,9	1,8	86,6	2,1	138,3	2,4
2,5	3,0	1,0	3,4	1,0	8,0	1,3	14,0	1,5	22,6	1,7	46,9	2,0	96,9	2,4	154,7	2,7
3,0	3,3	1,1	3,8	1,1	8,8	1,4	15,4	1,6	24,8	1,8	51,4	2,2	106,1	2,6	169,6	2,9

Filling level 100% (h/d=1,0)

SML	DN 70		DN 80		DN 100		DN 125		DN 150		DN 200		DN 250		DN 300	
	d_i=51		d_i=75		d_i=103		d_i=127		d_i=152		d_i=200		d_i=263		d_i=314	
J	Q	V	Q	V	Q	V	Q	V	Q	V	Q	V	Q	V	Q	V
cm/m	l/s	m/s	l/s	m/s	l/s	m/s	l/s	m/s	l/s	m/s	l/s	m/s	l/s	m/s	l/s	m/s
0,5	1,6	0,4	1,8	0,4	4,2	0,5	7,4	0,6	12,0	0,7	24,9	0,8	51,6	1,0	82,6	1,1
0,6	1,7	0,4	2,0	0,4	4,7	0,6	8,2	0,6	13,2	0,7	27,4	0,9	56,6	1,0	90,5	1,2
0,7	1,9	0,5	2,1	0,5	5,0	0,6	8,8	0,7	14,2	0,8	29,6	0,9	61,2	1,1	97,8	1,3
0,8	2,0	0,5	2,3	0,5	5,4	0,6	9,4	0,7	15,2	0,8	31,6	1,0	65,4	1,2	104,6	1,4
0,9	2,1	0,5	2,4	0,6	5,7	0,7	10,0	0,8	16,2	0,9	33,6	1,1	69,4	1,3	111,0	1,4
1,0	2,2	0,6	2,6	0,6	6,0	0,7	10,6	0,8	17,1	0,9	35,4	1,1	73,2	1,3	117,1	1,5
1,1	2,3	0,6	2,7	0,6	6,3	0,8	11,1	0,9	17,9	1,0	37,1	1,2	76,8	1,4	122,8	1,6
1,2	2,4	0,6	2,8	0,6	6,6	0,8	11,6	0,9	18,7	1,0	38,8	1,2	80,3	1,5	128,3	1,7
1,3	2,5	0,6	2,9	0,7	6,9	0,8	12,1	1,0	19,5	1,1	40,4	1,3	83,6	1,5	133,6	1,7
1,4	2,6	0,7	3,1	0,7	7,2	0,9	12,5	1,0	20,2	1,1	41,9	1,3	86,7	1,6	138,7	1,8
1,5	2,7	0,7	3,2	0,7	7,4	0,9	13,0	1,0	20,9	1,2	43,4	1,4	89,8	1,7	143,6	1,9
1,6	2,8	0,7	3,3	0,7	7,7	0,9	13,4	1,1	21,6	1,2	44,9	1,4	92,8	1,7	148,3	1,9
1,7	2,9	0,7	3,4	0,8	7,9	0,9	13,8	1,1	22,3	1,2	46,3	1,5	95,6	1,8	152,9	2,0
1,8	3,0	0,8	3,5	0,8	8,1	1,0	14,2	1,1	22,9	1,3	47,6	1,5	98,4	1,8	157,3	2,0
1,9	3,1	0,8	3,6	0,8	8,3	1,0	14,6	1,2	23,6	1,3	48,9	1,6	101,1	1,9	161,7	2,1
2,0	3,2	0,8	3,7	0,8	8,6	1,0	15,0	1,2	24,2	1,3	50,2	1,6	103,8	1,9	165,9	2,1
2,5	3,5	0,9	4,1	0,9	9,6	1,2	16,8	1,3	27,1	1,5	56,2	1,8	116,1	2,1	185,6	2,4
3,0	3,9	1,0	4,5	1,0	10,5	1,3	18,4	1,5	29,7	1,6	61,6	2,0	127,2	2,3	203,3	2,6

Attention: please observe the minimum slope defined in EN 12056.

Aquaperfect Siphonic Flat Roof Drainage

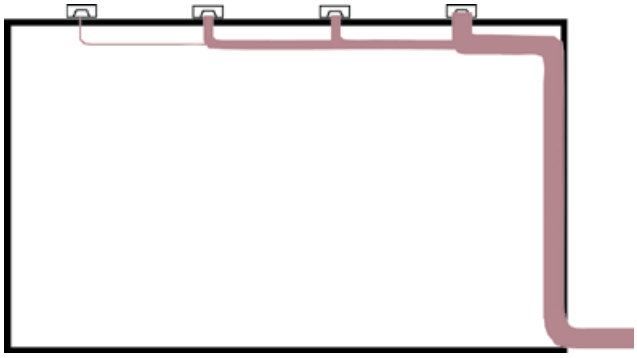

Aquaperfect siphonic system

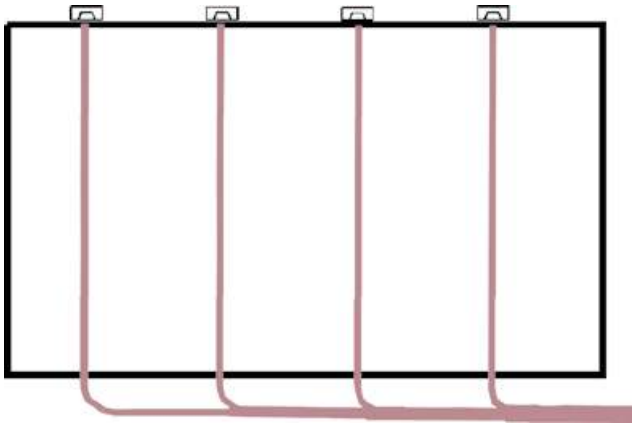

Gravity drainage

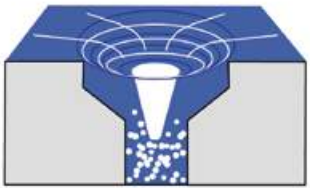

Normal roof drain



Drain for Aquaperfect siphonic system with air sieve when the calculation rainfall is reached

Differences to Gravity Drainage

In a normal gravity roof drainage, the rain water is drained to the public sewage through partly filled pipelines. The filling level of these pipelines is generally at a maximum of 70% in order to ensure air circulation and pressure-free drainage.

In the Aquaperfect siphonic system, starting at a certain rain water quantity (calculation rainfall quantity), the pipeline works without air and with negative pressure. The intake of air is avoided by an air sieve in the roof drain, which prevents the forming of a vortex (Coriolis force).

Advantages and Application

The collection lines in the Aquaperfect siphonic system are installed without slope and therefore save space below the roof construction. Nevertheless, the elevated flow velocities ensure a good selfcleaning effect. Smaller nominal widths, inferior material requirements and the avoidance of pipe trenches and base pipelines save cost and installation time.

Cast iron distinguishes itself by a low thermal expansion coefficient and does not add combustion loads to the building. Very important is the resistance to high negative pressure in the pipe, so it is not necessary to over-dimension the pipelines.

The Aquaperfect siphonic system ought to be considered in the following cases:

- large roof areas, min. 150 m^2 per drain
- a difference in height of at least 4.2 m between the roof and the back water level
- limited installation space below the ceiling
- long collection pipelines

Standards

The planning and execution of siphonic systems is based on:
- EN 12056-3 (Layout and calculationn of roof drainage)
- DIN 1986-100 (German supplement to EN 12056)
- EN 1253 (roof drains)

Functioning

The pressure height corresponds to the difference in height between the roof surface and the gravity drainage part of the rain water installation, which is at or above the back water level (street level). Contrary to this force acts the pressure loss caused by pipe friction and the individual pressure resistance of the pipeline components. At the zero point, both forces cancel each other out, here the negative pressure converts to a positive pressure. After a relaxation length, the drainage has to transform into a gravity drainage at the back water level or in some cases above that level.

The strongest negative pressure is normally to be found at the so-called critical point, the turning of the horizontal collection pipe into the down pipe. The negative pressure may amount to a maximum of -900 mbar.

The flow velocity in the negative pressure area should be at least 0.5 m/s. In the transition area from the siphonic to gravity drainage, the elevated kinetic energy of the siphonic flow must be considered when installing the pipeline (e.g. abutments, grip collars, down pipe support etc.).

The drainage volume of the single roof drains ought to be practically identical within tight tolerances in order to avoid flow breaks, which would lead to delays in reaching the full flow.

The calculation rainfall quantity is to be defined based on local statistical values. For economical reasons and in order to ensure the self-cleansing effect, the full flow calculation is based on the highest rainfall quantity during five minutes which falls statistically within a period of five years (e.g. 300 l /(s·ha)). The highest five-minutes rainfall quantity which is to be expected statistically within a period of 100 years – the so-called century rain (e.g. 600 l/(s·ha)) – cannot be drained through the siphonic pipeline system and might endanger the flat roof construction due to its weight. In case of flat roofs in light-weight construction, emergency drains must be installed for this contingency in any case.

For other roof constructions this must be examined in each case. The drainage is done either by side drains over the facade, or with roof drains with height extensions which allow for the corresponding water level on the roof and dispose of a separate pipeline system. The water will be drained to surfaces near the building that can be flooded without danger.

Calculation

The pressure ratio, flow velocities and drainage volumes must be calculated for each pipeline section and for each drain separately and then adjusted to the requirements. A calculation by hand is possible using among other things the Bernoulli equation. However, this calculating work is time-consuming, error-prone and troublesome: if the required values are not reached, the pipeline must be changed and the calculation must be repeated, if necessary several times. Larger building projects practically have to be planned with an appropriate computer software. Aquaperfect partners – Düker and Aco Passavant – offer you the service of planning and calculating siphonic systems for specific building projects.

The specifier receives:

- pipeline section table and complete hydraulic calculation
- list of materials
- pipeline drawing
- specifying text

Data required for the calculation

- horizontal sections
- sections
- detail of roof construction and insulation
- roof view with notation of the low-level points for drainage
- position of the back water level
- position of the connection points to the gravity system (base or collection pipes) and connection diameters
- Calculation rainfall quantity and roof material calculation value
- position of emergency drains
- effective drainage height, considering the admissible loads on the roof surface

In case of constructional modifications, the siphonic system must be re-calculated!



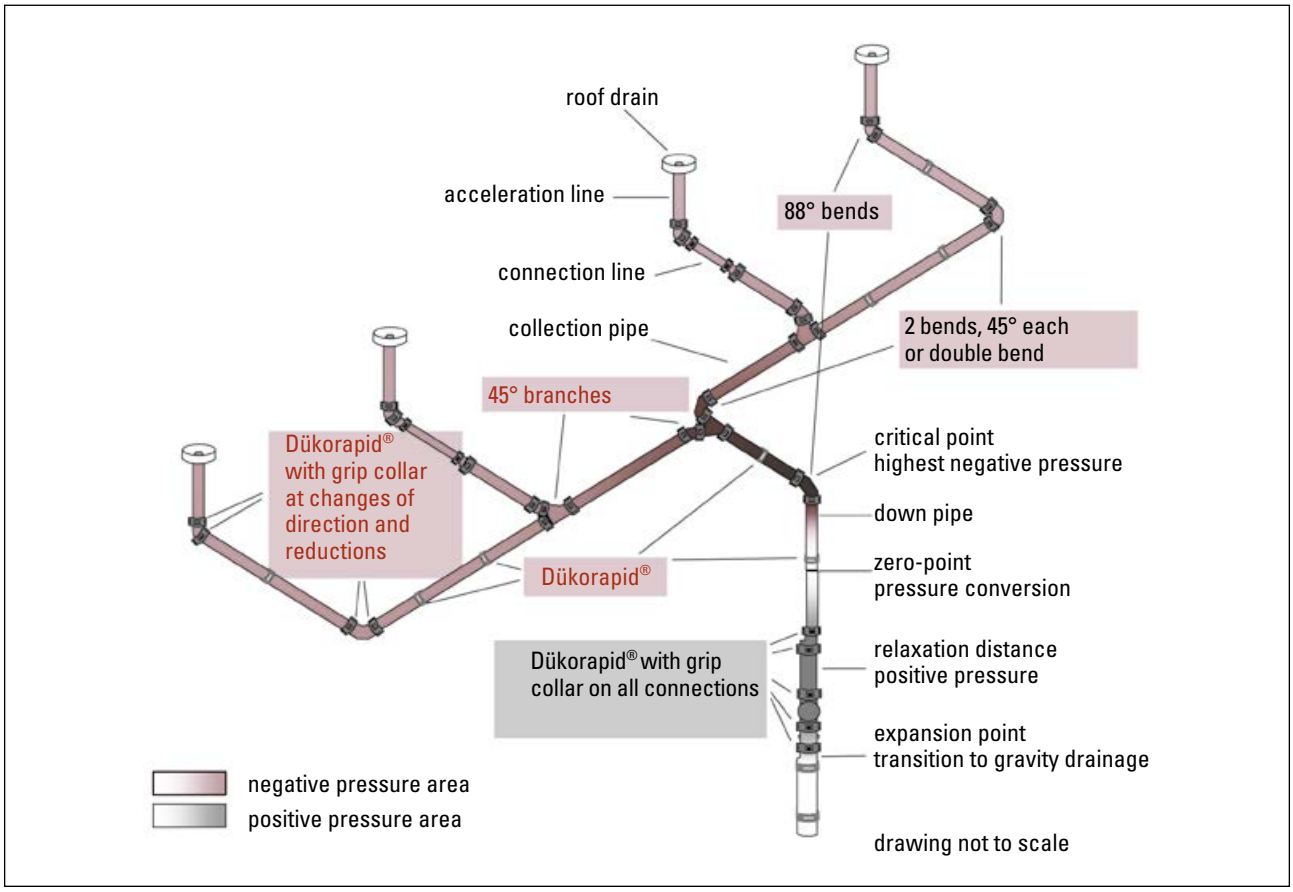
roof drain
acceleration line
88° bends
connection line
collection pipe
2 bends, 45° each
or double bend
45° branches
Dükorapid®
with grip collar
at changes of
direction and
reductions
critical point
highest negative pressure
down pipe
Dükorapid®
zero-point
pressure conversion
Dükorapid® with grip
collar on all connections
relaxation distance
positive pressure
expansion point
transition to gravity drainage
negative pressure area
positive pressure area
drawing not to scale

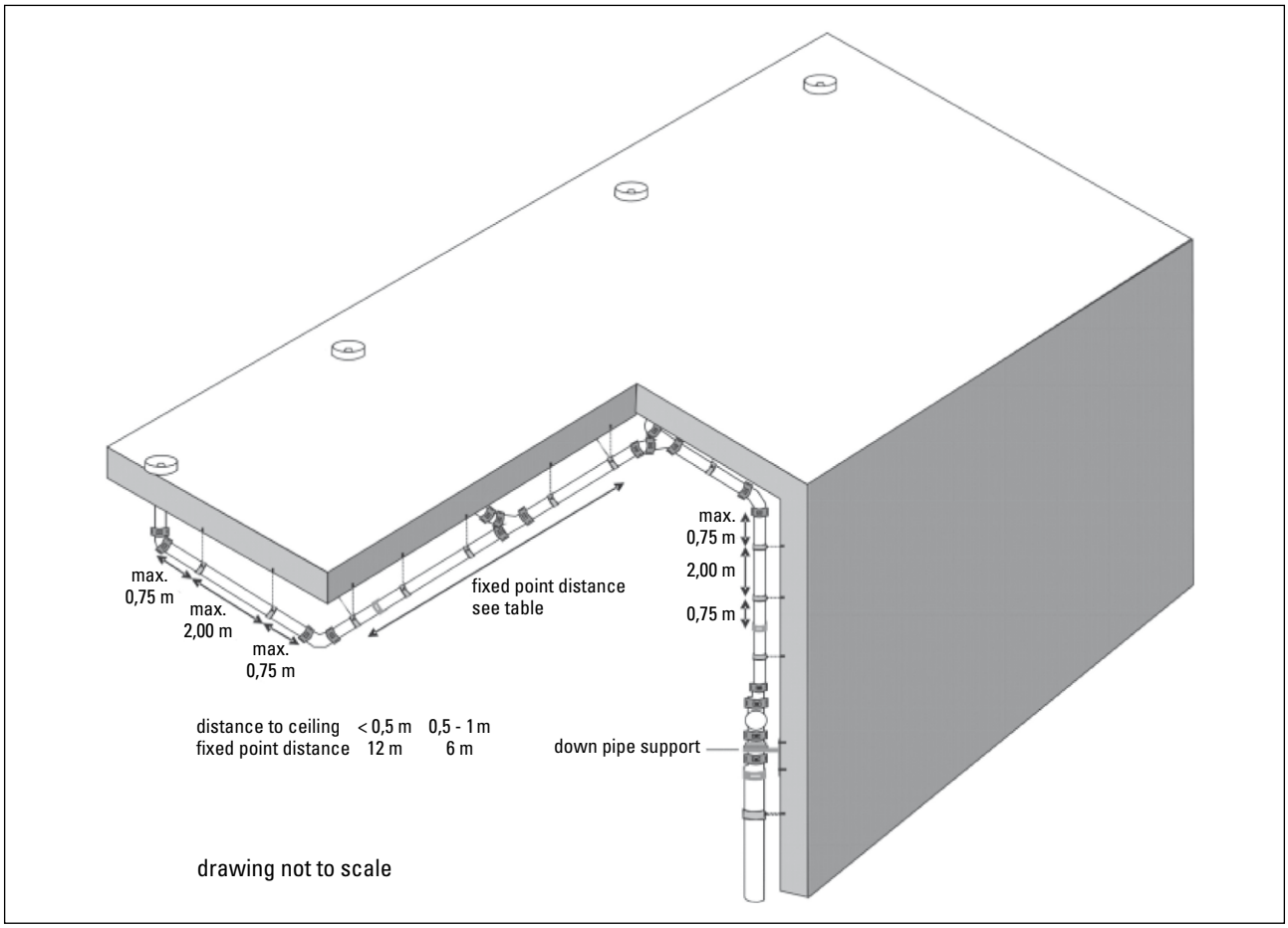
max.
0,75 m
max.
2,00 m
max.
0,75 m
fixed point distance
see table
max.
0,75 m
2,00 m
0,75 m
distance to ceiling < 0,5 m 0,5 - 1 m
fixed point distance 12 m 6 m
down pipe support
drawing not to scale

General Rules for Planning

The following hints make planning easier:

- The pipeline nets ought to be symmetrical where possible.
- The acceleration line ought to be at least 0.4 m.
- The connection pipeline must be sufficiently long and be connected horizontally to the collection pipe.
- The overall length of the longest flow distance (from the roof drain to the base pipeline) should be no more than ten times the height of the down pipe, but in any case no more than 100 m.
- The roof surface per down pipe should be no more than 5000 m^2.
- The distance between two drains should not surpass 20 m.
- Roof surfaces with a height difference of more than 1 m or with different roof material values should not be connected to the same down pipe.

Rules for Fixing and Installing

The installation must follow EN 12056 part 1, paragraph 5.4.2, part 3, paragraph 7.6.2 as well as German DIN 1986 part 100, sections 5.1.3 and 6.4.

On principle, the pipeline directions, diameters and lengths stated in the specifications must be observed, as otherwise the calculated pressures and volumes will not be reached. The material type must be observed as other materials differ regarding pressure loss and reaction to negative pressure. A minimum of 6 m of the gravity drainage must also be installed in cast iron material. The pipelines in the negative pressure area can be installed without slope.

Fittings

At branchings, branches with 45° angles must be used, for turns bends with 45°, or double bends. Only at the end of the acceleration line (below the roof drain) and at the transition into the down pipe, 88° bends are used.

Couplings

On principle Rapid couplings should be used at all connections.

In the area of negative pressure, all turns, branchings, reductions and the complete acceleration line must be secured with grip collars. In the area of positive pressure, all couplings must be secured with grip collars. Where the gravity drainage starts, on a length of 6 m all changes of direction are to be secured with grip collars. In case of down pipes of more than 30 m height, the bends must be secured in any case.

Fixings

The basic rules of page 94/95 are to be observed.

Fixed-point devices are to be installed with an inbetween distance of no more than 12 m (distance to the ceiling < 0.5 m) or 6 m (distance to the ceiling 0.5 – 1 m). The fixed points can be executed with threaded rods at an angle of at least 30° to the vertical fixing, or with consoles.

Pipelines with risk of water condensation

Pipelines that can be subject to condensation or frost must be insulated accordingly. We recommend using the preinsulated compound pipe system VML.

Start-off and Maintenance

After installation the roof surface is to be cleaned thoroughly. If considerable dirt accumulation on the roof surface is to be expected later on, it is recommendable to use gravel as a filter layer. Unless the gravel is used on the whole roof, a gravel edge with a width of 0.5 m should be applied around the roof drain. A maintenance contract covering the removal of dirt, plant growth and dead leaves and the check of the drain components is recommendable.

Contact

For the calculation of Aquaperfect siphonic systems and in case of technical questions please contact our hotline at +49 9353 791-280.



CAD Product Images in 2D and 3D Format

1. Product data and drawings for users of installation planning and design software

Most planning software types should be equipped with an interface for VDI 3805 / ISO 16757 product data. The user can import the complete file library from the internet. Afterwards the complete technical and commercial data as well as 3D geometry data will be available in the software – including disturbance space, connecting points, flow resistance etc.

The VDI 3805 guideline, which is presently being incorporated into an international standard ISO 16757, represents a universal and open data format for product data for building installation applications. If your planning and design software should not import the data, please consult the software supplier so the corresponding interface is opened up in your software version. The complete VDI 3805 library can be found on www.dueker.de/vdi3805.

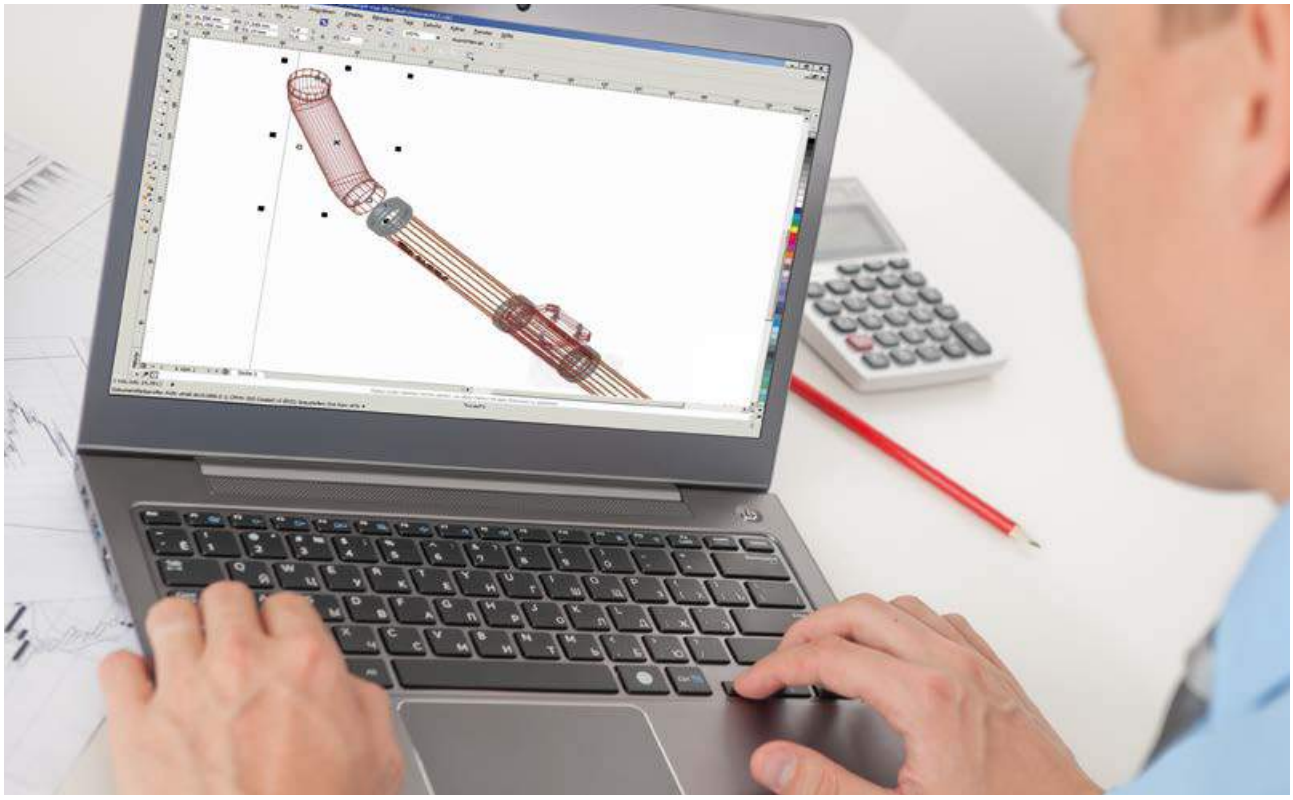

CAD Product Images in 2D and 3D Format

2. Product drawings for users of drawing software, e.g. AutoCAD

All drawings of Düker drainage pipe products are available in the web selector (a link is to be found at www.dueker.de/vdi3805). All drawing views can be saved as dxf files in 3D or 2D, or transferred to the CAD programme with the drag and drop function.

Operation of the Web Selector

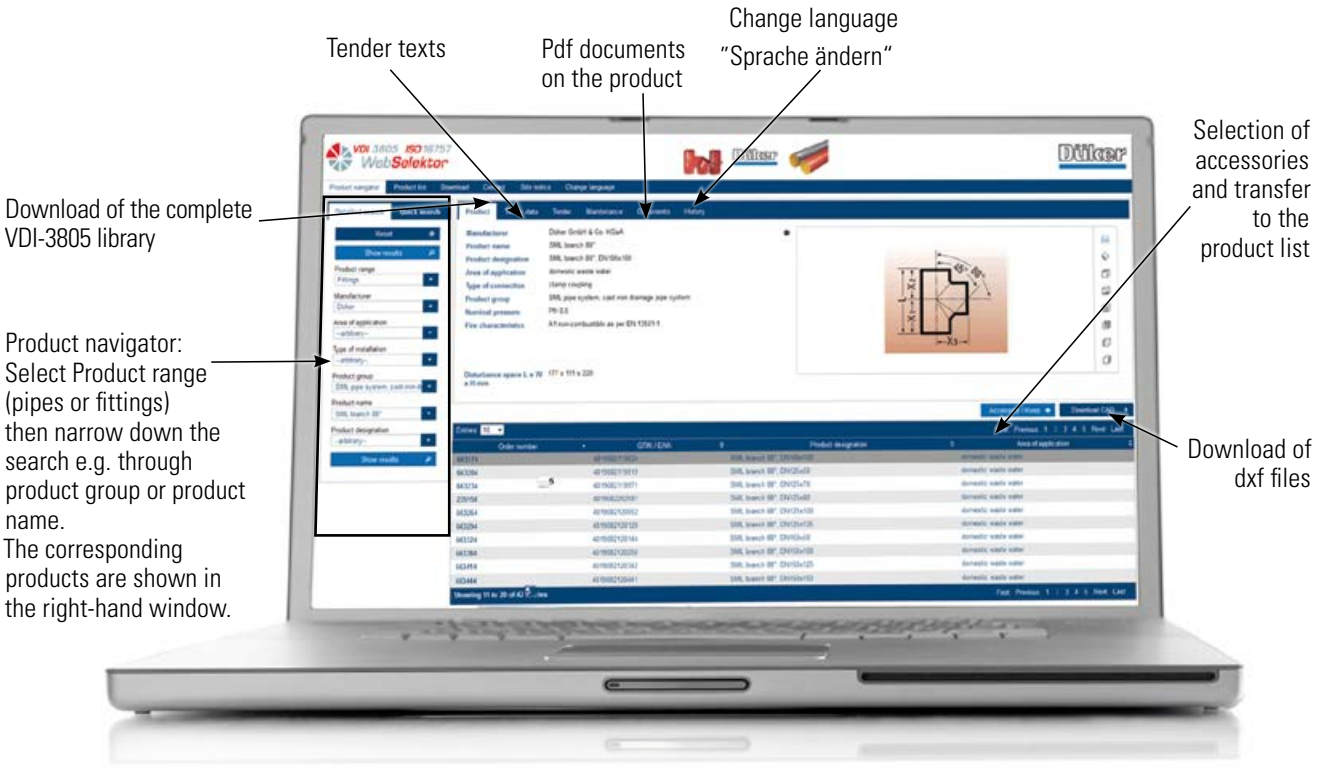

05 Specifying Texts



Drainage pipe system – Düker – SML system				
No.	Quantity	Subject	Unit price	Total
		Socketless cast iron drainage pipes and fittings, approved and manufactured as per EN 877, dimensions as per DIN 19 522, , with CE marking and Declaration of Performance as per CPR and with RAL quality seal of the GEG (quality association drainage technology cast iron). Reaction to fire A1 (non-combustible) as per EN 13501-1. Short name: Düker- SML –pipes and fittings Pipes inside with a fully cross-linked two-component epoxy coating in ochre colour, outside with a reddish brown primer, fittings inside and outside with a fully cross-linked epoxy coating. Range of products DN 50 – 400 as per the latest price-list. **Installation:** As per Düker installation instructions and in accordance with the technical regulations of EN 12056 / DIN 1986 part 100 / EN 752, EN 1610 **Couplings:** Dükorapid®, Dükorapid® Inox, Rapid-Inox, CE dual ring coupling, Connect-F Inox coupling, Connect-G Inox coupling, CV coupling, CE coupling, Düker EK Fix coupling Z-42.5-299 or Konfix-Multi coupling Z-42.5-240 and Multiquick coupling Z-42.5-240 for connection to pipes, fittings and other elements (e.g. floor drain) made of other materials to SML. The securing of pipelines with the risk of internal pressure and axial restraint require grip collars or Connect couplings. Couplings and grip collars are paid for separately		
1		mtrs. **Düker – SML pipes** in trade lengths of 3000 mm, **DN** ....., including cutting to length, supply and installation material: wages: Fittings*		
2		pcs. **Düker SML bends** all angles (15°,30°,45°,68°,88°), **DN** ....., supply and installation material: wages:		
3		pcs. **Düker SML branches** all angles (45°, 70°, 88°), **DN** ..... x ....., supply and installation material: wages:		
4		pcs. Düker **SML reducers, DN** ..... x ....., supply and installation material: wages:		
5		pcs. **Düker SML plugs, DN** ....., supply and installation. material: wages:		
6		pcs. **Düker SML inspection pipes** with round opening, for down pipes, **DN** ....., supply and installation material: wages:		

No.	Quantity	Subject	Unit price	Total
7		pcs. **Düker SML inspection pipes** with rectangular opening, for horizontal and down pipes, **DN** ....., supply and installation material: wages:		
8		pcs. **Düker SML down pipe supports** including supporting ring with rubber ring, **DN** ....., supply and installation material: wages:		
9		pcs. **Dükorapid® couplings,** metal collar made of stabilised chromium steel, material no. 1.4510/11 as per EN 10088, lock with only one bolt, locking plates made of material no. 1.4301 as per EN 10088; bolt and square nut steel with zinc lamellae coating, washer steel A2. Sealing collar made of EPDM, **DN** ....., supply and installation. material: wages:		
10		pcs. **Dükorapid® Inox couplings,** metal collar and lock made of material no. 1.4404 as per EN 10088, lock with only one bolt, bolt, square nut and washer steel A4. Sealing collar made of EPDM, **DN** ....., supply and installation. material: wages:		
11		pcs. **Rapid Inox couplings,** lock with only one bolt, all parts made of material no. 1.4571/1.4401 as per EN 10088, sealing collar made of EPDM**, **DN** ....., supply and installation. material: wages:		
12		pcs. **Düker CV couplings,** metal collar made of stabilised chromium steel, material no. 14510/11 as per EN 10088; lock and bolts galvanised, sealing collar made of EPDM, **DN** ....., supply and installation. material: wages:		
13		pcs. **CE couplings**, metal collar, lock and screws made of chromium nickel steel, material no. 1.4301 as per EN 10088, sealing collar made of EPDM, **DN** ....., supply and installation. material: wages:		
14		pcs. **Düker CE dual ring coupling,** metal collar, locking parts and screws made of chromium nickel steel, material no. 1.4301 as per EN 10088, sealing collar made of EPDM, **DN** ....., supply and installation. material: wages:		
15		pcs. **Connect-F Inox couplings,** metal collar made of material no. 1.4571, locking parts made of material no. 1.4401, screws made of material no. 1.4404, sealing collar made of EPDM, **DN** ....., supply and installation. material: wages:		

No.	Quantity	Subject	Unit price	Total
16		pcs. **Connect-G Inox couplings,** coupling with axial restraint, metal collar made of material no. 1.4571, locking parts made of material no. 1.4401, screws made of material no. 1.4404, claw ring made of material no. 1.4310, sealing collar made of EPDM, **DN** ....., supply and installation. material: wages:		
17		pcs. **Düker EK Fix couplings,** approval no. Z-42.5-299, made of EPDM, including clamp straps, for connection of pipes made of other materials to SML, **DN** ....., supply and installation. material: wages:		
18		pcs. **Konfix-Multi couplings,** approval no. Z-42.5-240 made of EPDM, including clamp straps, for connection of pipes made of other materials to SML, **DN 100,** supply and installation. material: wages:		
19		pcs. **Multiquick couplings,** approval no. Z-42.5-240 made of EPDM, including clamp straps, for connection of pipes made of other materials to SML, **DN 100,** supply and installation. material: wages:		
20		pcs. **Kombi grip collars,** securing grip collar with axial restraint for Dükorapid® and Rapid Inox couplings as well as CV and CE couplings on pipelines subject to inside pressure, **DN** ....., supply and installation. material: wages:		
21		pcs. **Express grip collars,** securing grip collar with hinge technology with axial restraint for Dükorapid® and Rapid Inox couplings as well as CV and CE couplings on pipelines subject to inside pressure, **DN** ....., supply and installation. material: wages:		
22		pcs. **Düker grip collars,** galvanised steel, securing grip collar with axial restraint for Düker CV- and CE couplings on pipelines subject to inside pressure, **DN** ....., supply and installation. material: wages:		

*for further fittings please refer to the product range

** if applicable the rubber quality is to be modified to NBR.

CONTACTS

Your Contacts at Düker Company

Export Department

Tel. +49 6093 87 570
Fax +49 6093 87 8570
E-Mail sales.drainage-tech@dueker.de

Export Manager

Mr Gerald Werner
Tel. +49 6093 87 250
E-Mail gerald.werner@dueker.de

Export Team

Ms Lena Rüth
Tel. +49 6093 87 414
E-Mail lena.rueth.@dueker.de

Ms Petra Benkert
Tel. +49 6093 87 274
E-Mail petra.benkert@dueker.de

Ms Ivonne Keller
Tel. +49 6093 87 282
E-Mail ivonne.keller@dueker.de

NOTES

NOTES

NOTES



Düker

DRAINAGE TECHNOLOGY

GLASS LINING TECHNOLOGIES

JOBBING FOUNDRY

FITTINGS AND VALVES

Always read the latest edition of this catalogue on www.dueker.de:

233040 / 12.15 Specifications subject to change without notice.

Düker GmbH & Co. KGaA

Würzburger Straße 10-16
D-97753 Karlstadt /Main
Germany

Phone +49 9353 791-570
Fax +49 9353 791-8570

Internet: www.dueker.de
E-Mail: sales.drainage-tech@dueker.de