Viega Pexfit Pro

The flexible plastic pipe that ensures reliability.



viega

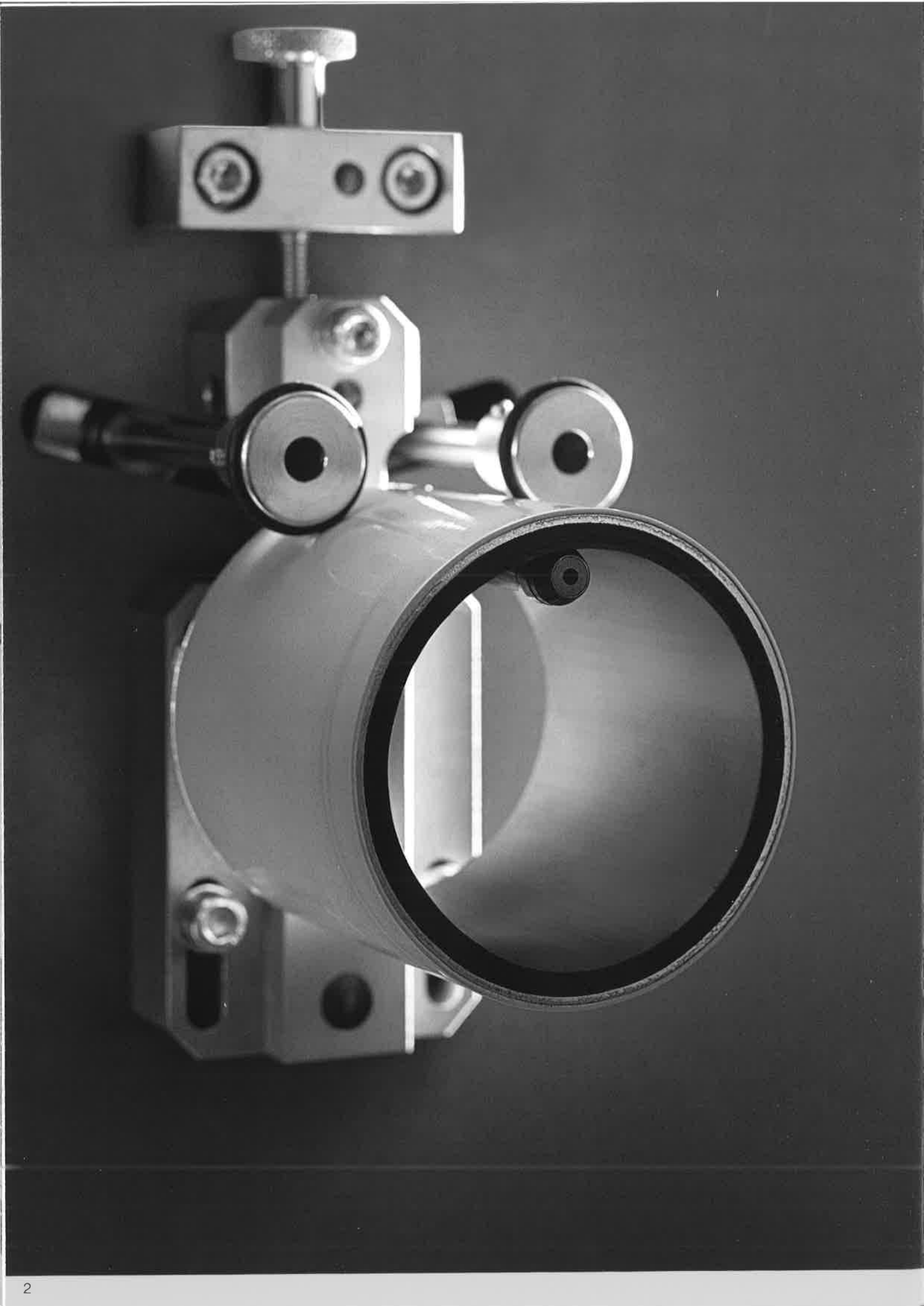

Viega – a better Idea!

Family tradition
The name Viega stands for a family company which from the word go has set high standards for product quality, client proximity, reliable delivery and service performance – first of all it makes these demands of itself. One thing is for certain: you need more than a good idea to compile an international success story. Courage, delight in innovation and passion are that qualities that, for good reason, have shaped the company for over 110 years.



Competence and variety
In the meantime, more than 16,000 products belong to the Viega portfolio. Products, which not only represent a unique selection for this sector, but are also of exceptional quality. The reason: Viega combines everything: excellently trained employees, the best raw materials, highly modern production sites – and that at all five factories, in Germany and the USA.



Systematic and precise
A total of over 16,000 items are available, being selected, coded, packaged and dispatched using an efficient logistics concept. The system is in place – as for everything at Viega. Not only are our processes integrated, but also our products. Press technology is a strong foundation for this – one of Viega's many innovations. The best example is Viega's Pexfit Pro system, as featured here: the plastic piping system that combines assembly-friendly flexibility with perfect safety. True to our mantra: Viega. A better idea!





At last, a system that is made to suit your needs completely. Pexfit Pro pipe are as flexible as you wish and as durable and reliable as you expect them to be. In combination with the new press connectors made of polyphenylsulphone (PPSU) and tried and tested Viega gunmetal connectors, they are suitable for nearly every installation in the house.

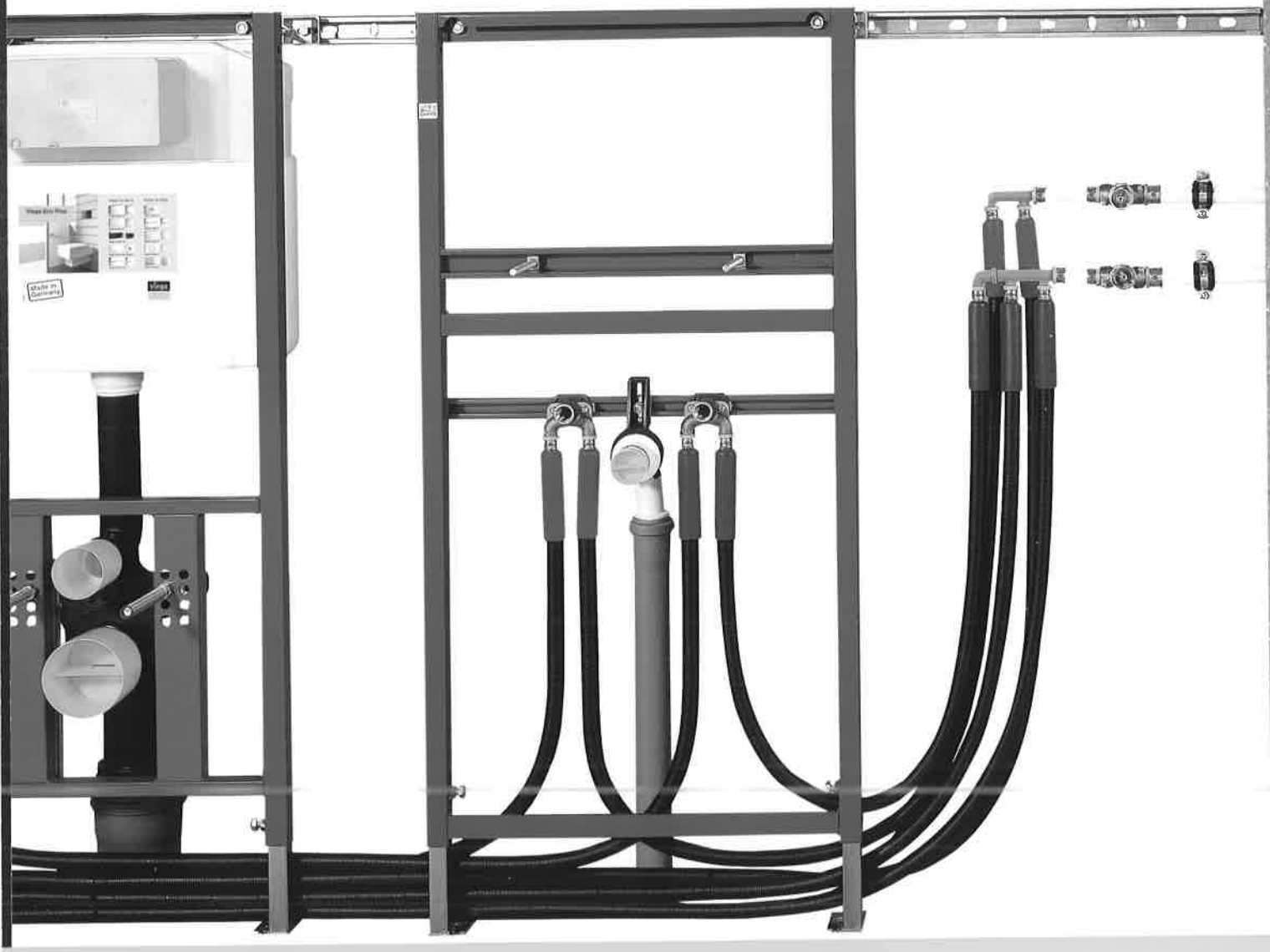

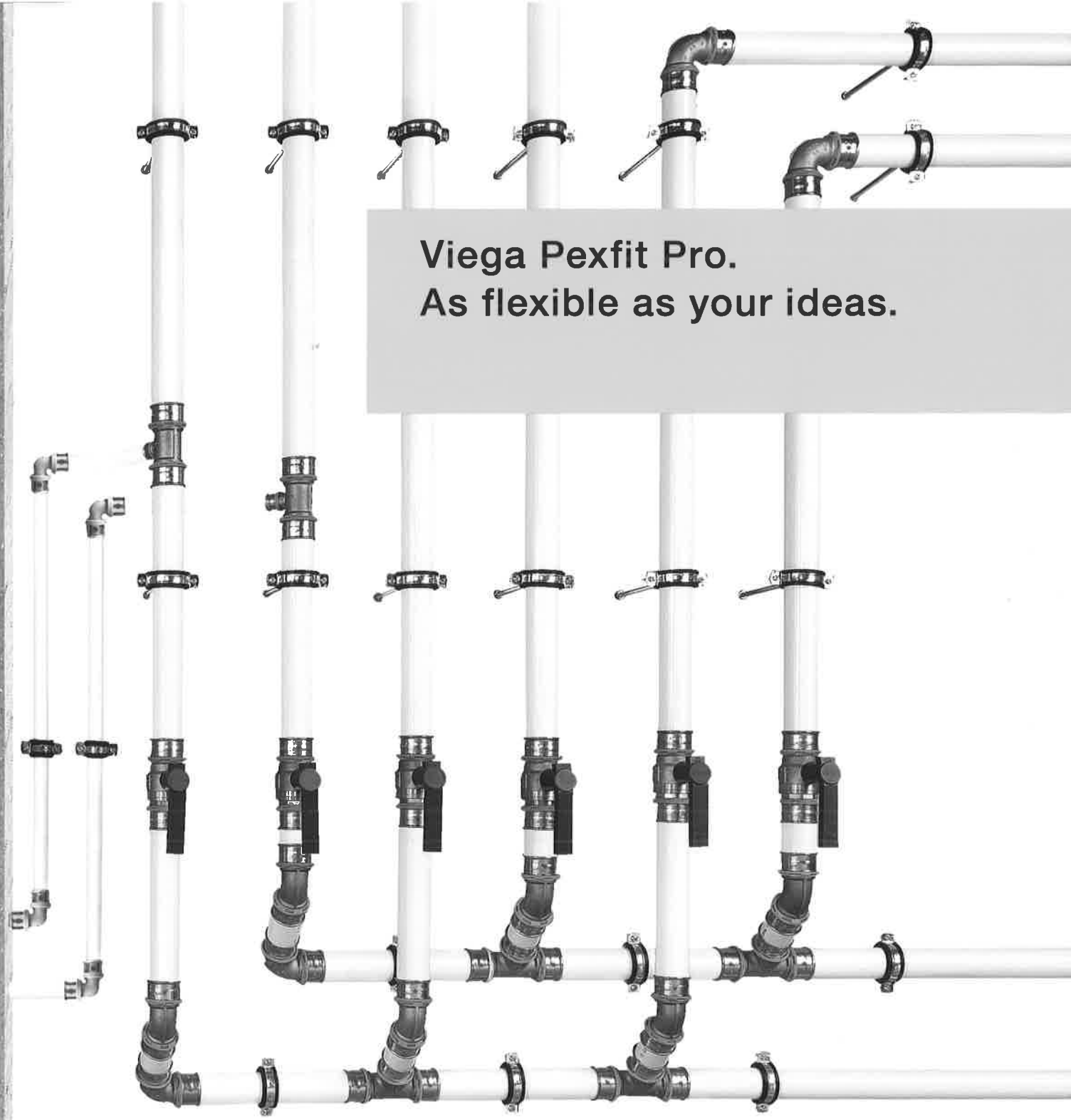

Viega Pexfit Pro.
As flexible as your ideas.

Pexfit Pro
The safe system with a high degree of versatility
Page 6

Pexfit Pro Plus
The permanently flexible pipe-in-pipe system for storey installation
Page 10

Drinking water installation
Drinking water is precious. Therefore, high quality technology for more safety and hygiene
Page 14

Heating installation
Assembly-friendly solutions for old and new buildings
Page 18

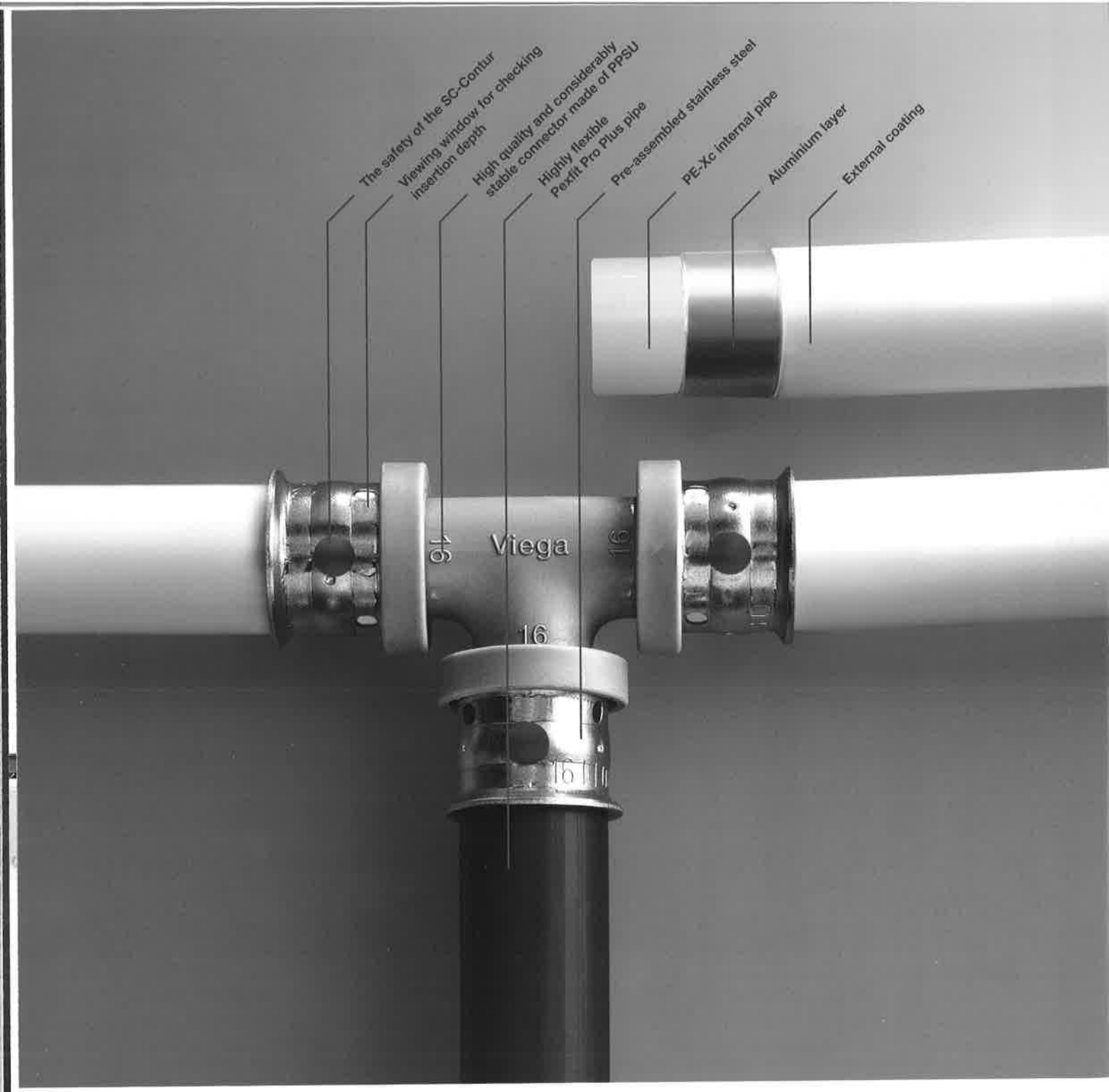

Viega Pexfit Pro.
A system like no other.

The safe piping system
The Pexfit Pro system not only convinces due to its new, durable pipe, but also due to the new sizes of connectors. It is now possible to take advantage of the sizes 14 and 18 mm, especially in heating installation. This offers you more practical opportunities – all of the sizes come with the SC-Contur.

Cross-linked PE-Xc
Pexfit Pro Fosta pipes consist of three layers: a PE-Xc internal pipe, an aluminium layer and a white external coating. Alongside the high pressure and temperature resistance, the physical cross-linking process, as well as the 3-layer construction, guarantee a long-lasting deployment of the pipe.

Absolutely dimensionally stable, even in the smallest bending radii
Pexfit Pro Fosta combines optimal 0handling with high pressure stability. The butt welded aluminium coating minimises the length expansion, makes the pipe diffusion proof and, above all, dimensionally stable. Pexfit Pro Fosta can be bent into the required shape and will remain so permanently. A real work-saver in confined spaces and a good opportunity to save material.

The safety of the complete system



Cross-linked PE-Xc pipe
The physical cross-linking transforms PE-molecule chains into a resistant three-dimensional grid and makes the pipe exceptionally stable and corrosion proof.



Viega Pexfit Pro:
A safe connection made in Germany.



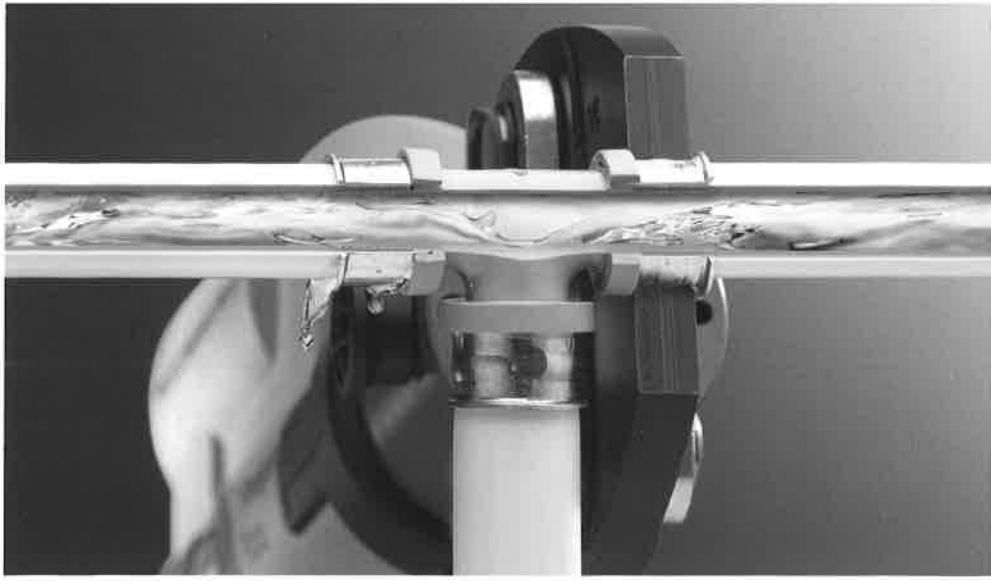

Pressing with the Viega safety factor
Pexfit Pro relies on the tried and tested Viega press connecting technology. Its superiority is displayed equally in the rapid, simple installation and a unique safety factor: the Viega SC-Contur. This feature is present on every size of PPSU or red brass connector from 14 to 63 mm in the Pexfit Pro range.

Central leakage test thanks to SC-Contur
As the first on the market, Viega guarantees that a complete leakage test can be carried out centrally using a manometer, as long as the entire system is fitted with Viega SC-Contur. The central leakage test offers more security and comfort than the normal necessary visual check of each individual press connector. If connectors are unintentionally left unpressed, the medium leaks out and is shown as a loss of pressure on the manometer.

If a dry leakage and load test is carried out instead of a wet test, the hygiene risks are lowered. These are created by the stagnant water in the pipes in the time between the first filling and commissioning.

High quality materials – the best protection against corrosion
Indestructible, permanently safe and always hygienic. Pexfit Pro press connectors are the right choice for installations in house technology. A high degree of installation safety and perfect quality are guaranteed in the long term. The extremely tight connectors with pre-assembled press sleeves made of stainless steel create an optimal holding function and prevent twisting after pressing.

Checked insertion depth
The new control window on the press connector allows the installer to check the correct insertion depth before pressing (insertion check).

The flexible solution with special riser pipes
Pexfit Pro has long since proven itself on storeys. But the system's flexibility is of use in riser pipes and cellar manifolds, e.g. when narrow ducts are required during renovation work. Therefore, even pipes and press connectors up to 63 mm in diameter belong to the comprehensive range – optimised for high flow capacities.

Quick and safe processing
Pexfit Pro makes the work considerably easier. Especially during shortening or processing, the exceptional stability of the pipe is advantageous. In addition, the connection to the press connectors is solved perfectly.

1. Shorten pipe
2. Mount connector
3. Press, finished! That saves time and money.



Viega Pexfit Pro.
The ideal pipe for every application.



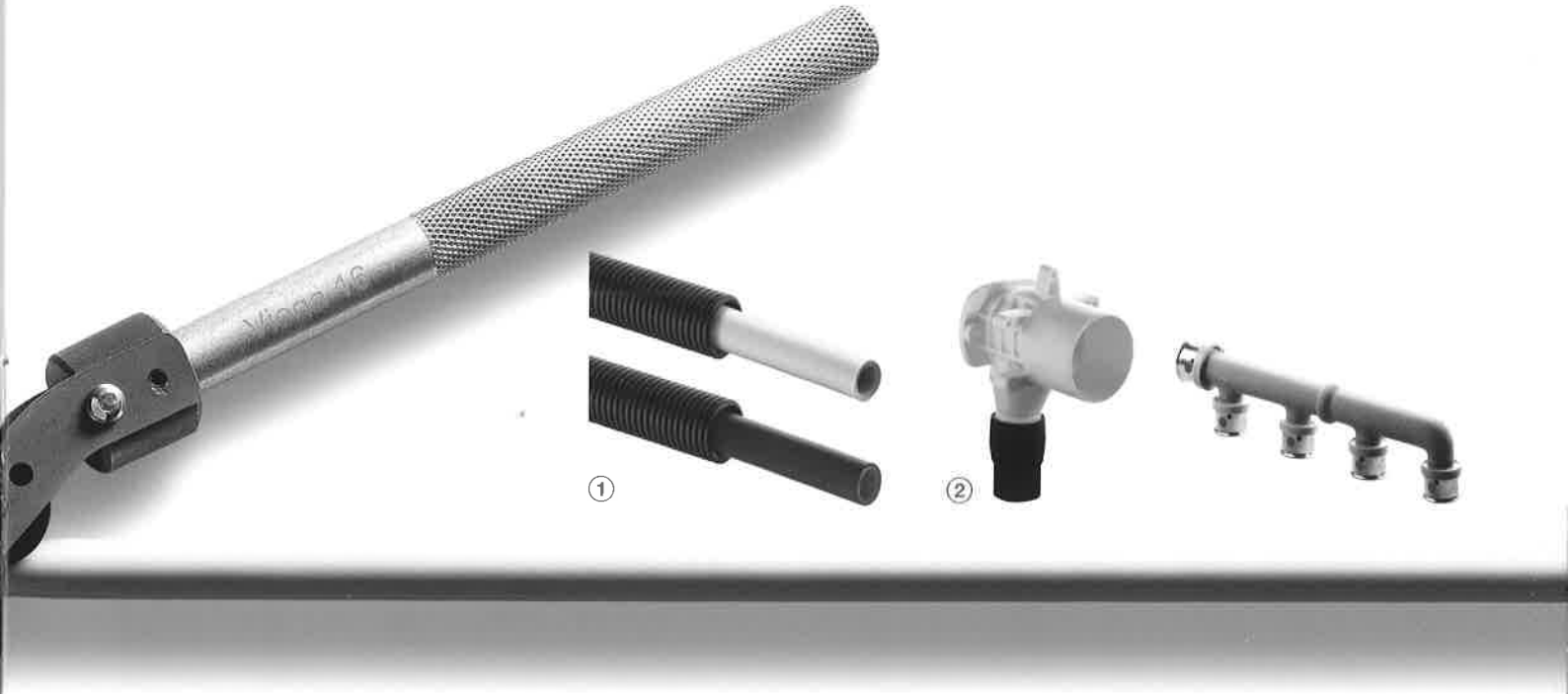

Doubly flexible (1)
The Pexfit Pro System proves its strength when it gets too tight for others. For example, in narrow wall slots or tight pre-wall installations. Viega even offers you a choice of two types of pipe – the dimensionally stable Pexfit Pro Fosta or the flexible Pexfit Pro Plus. This distiguishes itself through an internal oxygen barrier made of EVOH and is available with or without protective coating.

Two pipe sizes
Pexfit Pro Plus is available in two sizes, with diameters of 16 and 20 mm. A combination with dimensionally stable Pexfit Pro Fosta pipes of the same size is always possible, as the same connectors are used for both systems.

Concealed connection socket (2)
The Pexfit Pro concealed connection socket is a Viega solution especially for pipe-in-pipe installations. It protects the interface to the water fitting against building site conditions and allows a simple pipe exchange without any damage to tiles. The perfect addition to the pipe variation with protective pipe.

Ideal for storey manifolds
Pexfit Pro Plus pipes are especially suitable for dry construction and pre-wall installations due to their constant flexibility. They are laid quickly and a good choice for drinking water installation.

Pexfit Pro Plus can be processed both quickly and simply. Shorten the highly flexible pipe to the desired length using pipe shears. Mount the connector, press, finished.





Viega Pexfit Pro Fosta.
Compatible can be so flexible.

The Viega modular system
When different materials such as copper, red brass, stainless steel or plastic have to be combined, there has to be a practical solution. The Viega modular system provides an economical and safe solution from one source.

It's all a question of adapting
An extensive range of Pexfit Pro connectors with press connections allows quick, uncomplicated crossover to metal pipes. Adaptors for Prestabo, Sanpress, Sanpress Inox, Profipress or other Viega systems are possible without much effort. But the adaptors do more than lower the workload, they provide absolute safety. With the help of exactly suited dimensions as well as the comprehensive protection of the Viega system guarantee and SC-Contur. That is how the freedom to choose between the tried and tested materials is restricted by nothing. The extensive connector range for drinking water and heating installation is able to fulfil all of the requirements.

The right adaptor for every connection



Adaptor



Insertion piece

The purest quality: Viega Pexfit Pro for drinking water installation.









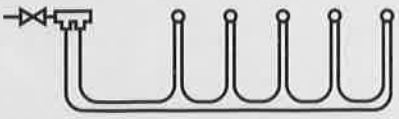

Drinking water hygiene requirements
Drinking water is our most important foodstuff. Therefore, the micro-biological, chemical and physical requirements placed on piping systems have been raised. The quality of the drinking water must be guaranteed at every point of extraction. It is the duty of installers, planners and operaters to maintain the water quality, especially in public buildings.

Viega drinking water competence
When it comes to drinking water, only high quality systems offer maximum safety. Pexfit Pro Fosta and Pexfit Pro Plus pipes are entirely suitable for use in drinking water installation. They are hygienic and fulfil all regulatory requirements as well as those for Viega press connectors.

Recommended connection types
When dealing with drinking water, it is paramount that stagnation is prevented. Therefore, this recommendation: Extraction points which are not used regularly should be fitted in loop or serial piping systems.

Serial piping
The minimal pipe requirement, the quick assembly and the suitable water exchange are points which favour this type of connection. The pipe runs from one extraction point to the next, which is partially fitted as a double connection. Serial piping is always completely hygienic, if the most regularly used extraction point is at the end of the system.

Loop piping
In this case, the pipe is lead back from the last extraction point to the manifold. The advantages: optimal water exchange, equally distributed pressure as well as minimal loss of pressure.

Perfect for pre-wall installations
No matter if Steptec, Viega Eco Plus or Viega Mono – Pexfit Pro pipes fit in perfectly into every Viega pre-wall technology system. Thanks to easy shaping and excellent dimensional stability, they simplify the assembly considerably and provide everything one expects from a modern drinking water installation.



Viega Pexfit Pro.
Storey installation made easy.



Pexfit Pro assembly unit: variable interface for all installation situations (1)
Pexfit Pro assembly units can be installed on, in or in front of the wall. The insertion depth is infinitely variable from 80 to 200 mm and offers as much freedom in the planning as the respective fastening set. Noise insulation made of highly flexible plastic round off the system. They provide the necessary noise reduction and with it optimal living comfort. All kinds of installation situations are possible: even assembly on the wall. If a drinking water installation is to be subsequently walled-in, the wall brackets are the perfect solution for this.


1

Optimal for duct installations
Whenever it gets tight, e.g. in Steptec duct constructions, Pexfit Pro Fosta and Pexfit Pro Plus exhibit their ease of assembly and high level of flexibility. Push on, press, finished. Press connectors speed up the work, while corrosion resistant PPSU manifolds ensure safety and hygiene.

Wall panels for every eventuality (2)
The comprehensive Pexfit Pro range is completed by the single and double wall panels.

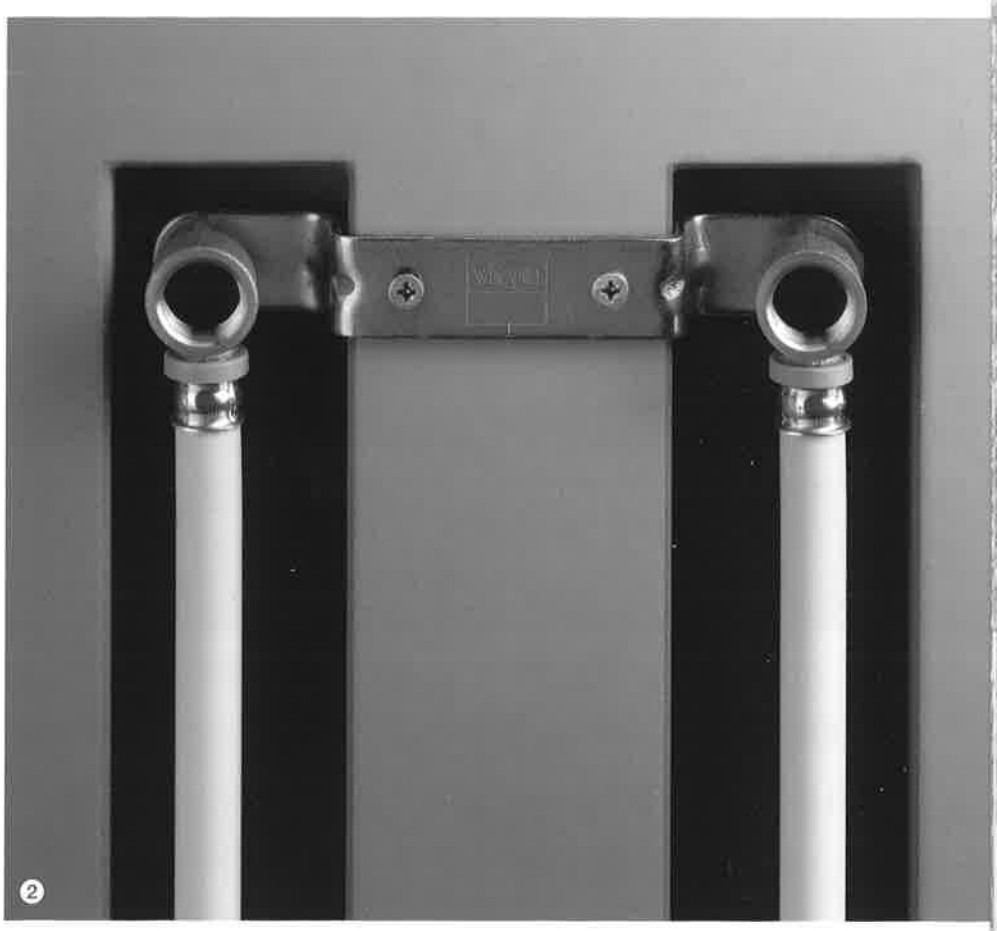
2

Concealed connection socket (3)
The Pexfit Pro concealed connection socket is a Viega solution especially for pipe-in-pipe installations. It protects the interface to the water fitting against building site conditions and allows a simple pipe exchange without any damage to tiles.


3



Viega Pexfit Pro.
The optimal radiator connection for use in renovations or new construction.



②





③



④



⑤

Renovation
The problem with renovation is often the lack of space and the narrow installation ducts. The innovations from Viega tackle this challenge successfully with ease and great flexibility.

New buildings
Pexfit Pro is also perfectly suitable for applications in new buildings. The system is easy to process and is expandable in the long term. Therefore, it helps to make sure that the building keeps the promises the architecture has made.

Laying Pexfit Pro in screed (1)
When laying the heating pipes in screed, the Pexfit Pro system is in its element. The high quality plastic pipe allows itself to be laid straight from the roll, to be bent by hand in any way and retains its form even in the smallest of radii.

Flexible radiator connections (2)
Using the pre-insulated radiator connection block made of stainless steel, towel radiators, for example, can be fitted economically everywhere in the bathroom. In addition, the block is fitted using fastening clips, at the exact height and exact place intended for the radiator.

Pre-insulated Pexfit Pro-cross T-piece (3)
The Viega cross T-piece prevents skipping pipes. It has been developed especially to meet the requirements of new buildings. For the simple crossing of pipes, whilst retaining the respective construction height. Insulation box included.

Easytop system shut-off valves (4)
From now on, a further innovation compliments the reliable Easytop family: system ball valves with Pexfit Pro connections, available in sizes 16 to 63 mm. They are fitted with a direct press connection with integrated SC-Contur and serve perfectly as shut-off valves.

Pexfit Pro mounting element (5)
The mounting element allows optimal fastening of the radiator connection – in the wall or from the floor. It can be set to the prevalent depth guages of 35/45/50 mm. Using the radiator connection set, the connection pipes can be mounted after all of the plastering and painting work has been completed.



Viega Press tools.
The technology
that connects everything.

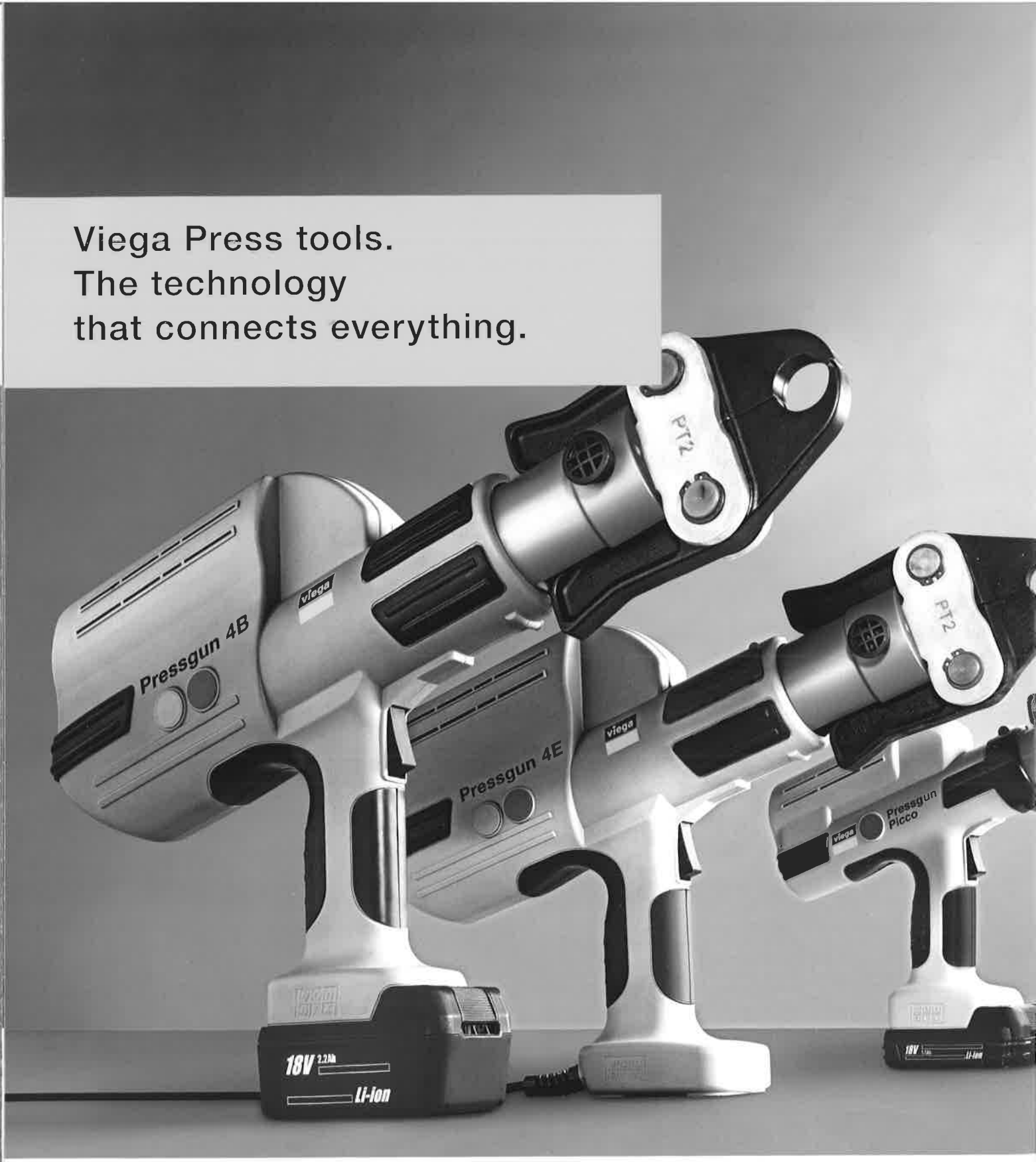





Press tools from Viega prove themselves in the most difficult working conditions. They belong to the safest and most reliable in Europe and are certified by TÜV. Long service intervals make them more economical.

Light, practical, fast:
Viega Pressgun

With the Pressguns 4E and 4B, you have a press tool of the highest standard. They are lighter, faster and easier to handle. The battery-operated machine 4B (18 V) has a highly modern lithium battery and is suitable for the sizes from 12 to 108 mm, just like the electric version 4E (230 V). Both machines are compatible with all of the Viega press jaws. Their pressing time of 3 seconds places them among the fastest of their kind. Unrivalled flexibility is achieved via the hinged press ring with the 180° rotatable press head for the sizes from 12 to 108 mm. Their exceptional price/performance ratio is also to be noticed in the minimal maintenance costs. A service check is not required until 32,000 pressings have been made.



Light pressing at a low weight: the Viega hand press tool for the sizes 14 to 25 mm.



The Viega pipe cutter for plastic pipes. Available in two sizes: for the sizes 14 to 40 mm and 25 to 63 mm.

Small, light, flexible:
The Viega Pressgun Picco

The name says it all with this press tool range. The Viega press tool for sizes up to 40 mm distinguishes itself through its small dimensions and its minimal basic weight of only 2.5 kg. It can also be used with the 180° rotatable press head. The practical Picco case comes with a press tool and 3 press jaws. There is room in the case for the storage of additional press jaws.



Viega Pexfit Pro.
The products at a glance.

The following overview of the individual elements from the Pexfit Pro range shows the versatility of the products.

The number shown is the model number and describes the shape of the connector or component.

Further detailed information can be found in the model number index in our catalogue.


4703


4714.1


4713P


4705


4714


4713


4705.5


4715


4793


4704


4711


4763


2701


4712


4735


2702


4718


1037


4716


2718


4725.5


2716


4717


4725.7


2726


4726.4


4724.3



4723



4733



1097.9



4724



4733



4723.1



4721.71



2736



2272.5



2021.7



4737



2782.5



4741



2739.1



2784.7



2141.3



2143.8



2799.7

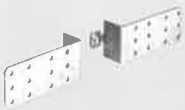

2141.4



4776



2780.4



4732.11



4749



4739.1



4732.4



4775.21P



5341



4756



4777



2191



4733



1097.6



5311

INT 703 752-8/12-3122 · We reserve the right to effect changes.

Viega GmbH & Co. KG
Plumbing and heating systems

Viega Platz 1
DE-57439 Attendorn
Germany

Phone +49 2722 61-1297
Fax +49 2722 61-1146

info@viega.com
www.viega.com