WELCOME TO:

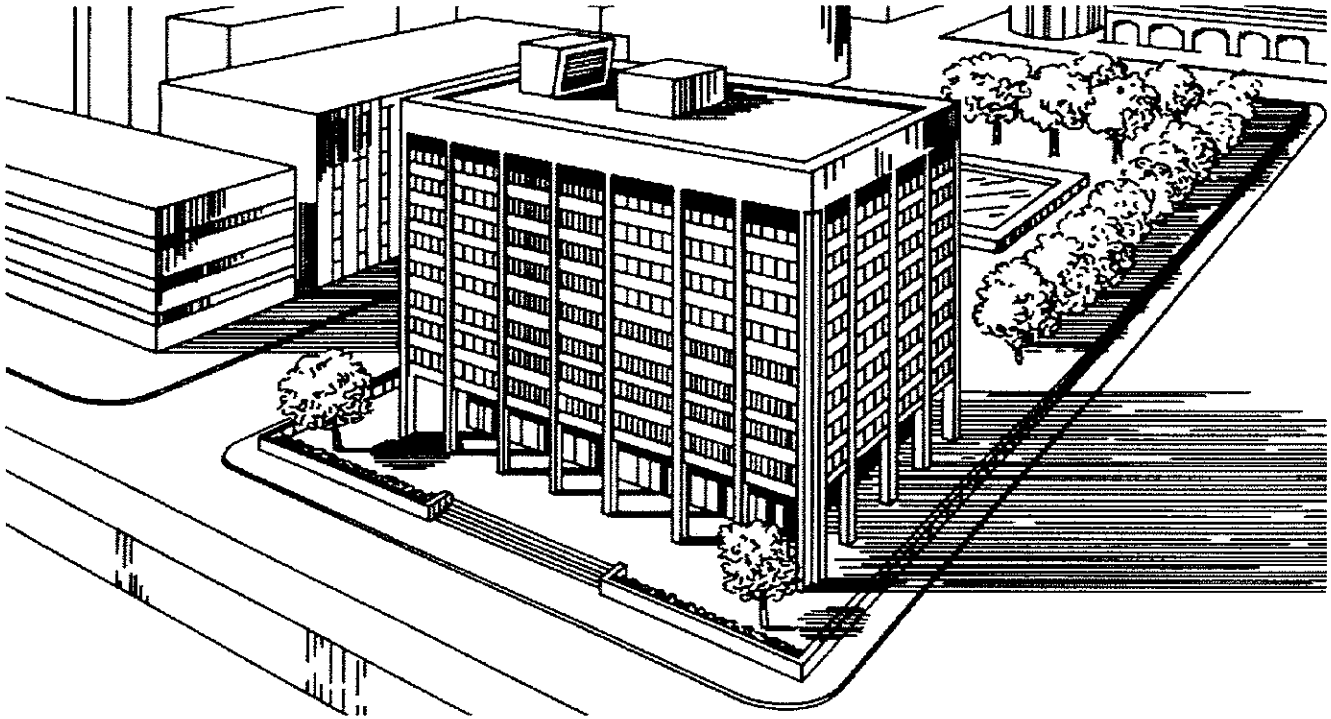

DES700

APPLIED WATER SYSTEM DESIGN

TABLE OF CONTENTS

Topic	Page	Topic	Page
• Introduction to Course	9	• Water Pipe Sizing	425
• Water System Design Steps	25	• Chiller Principles	471
• Basic Water System Concepts	45	• Chiller Plant	595
• Water Coils	151	• Chiller Selection	637
• Fan Coil Units	191	• Water Pumps	661
• Air Handling Units	243	• Cooling Towers	721
• Control Valves	311	• Design Project	766
• Piping Layout	397		

Reference Material:

Cat. No	Carrier No	Description
• (791-122)	T200-22B	Air Cooling Coils
• (791-123)	T200-23B	Central Station Air Handling Equipment
• (510-312)	SDM3	Piping Design
• (791-329)	T200-29C	Centrifugal Equipment
• (791-332)	T200-32B	Reciprocating Liquid Chillers
• (791-033)	T200-33	Water Piping Systems and Pumps
• (795-206)	ENG-06	Designing and Applying Commercial Systems
• (795-205)	CSQR	Commercial Systems Quick Reference

PREPARATIONS

- Please fill out the Student Record Sheet
- Pass to the center aisle when completed

STUDENT RECORD

COMPLETE AND HAND IN BEFORE STARTING THE COURSE

STUDENT RECORD

Last:	First:	Middle initial:
Home Address:		
City:	State:	Zip:
Business Address:		
Business Name:	Business Phone: ( )	
City:	State:	Zip:
Supervisor's Name:	Distributor:	
Please Print Your Name as Desired on Course Certificate:		
Local Address while Attending Class:		
Motel/Hotel Name or Temporary Address:		
Emergency Notification Name:	Emergency Phone: ( )	

Which Brand are you affiliated with?	Carrier ☐	Bryant ☐	Payne ☐	Day & Night ☐

Please check the type description that most identifies YOU:

☐	Internal Dept #_____	☐	Architect
☐	Distributor	☐	Building Owner / Operator
☐	Commercial Contractor	☐	International
☐	Mechanical Contractor	☐	National Accounts
☐	Residential Contractor	☐	Government Dept # _____
☐	Utility	☐	(BSS)
☐	Consulting Engineer	☐	Other_____

How did you hear about this class?



INTRODUCTIONS

- **Please provide the class with the following information about yourself:**
  - **Your name**
  - **Company you work for**
  - **Your job**
  - **Years of experience with HVAC design**

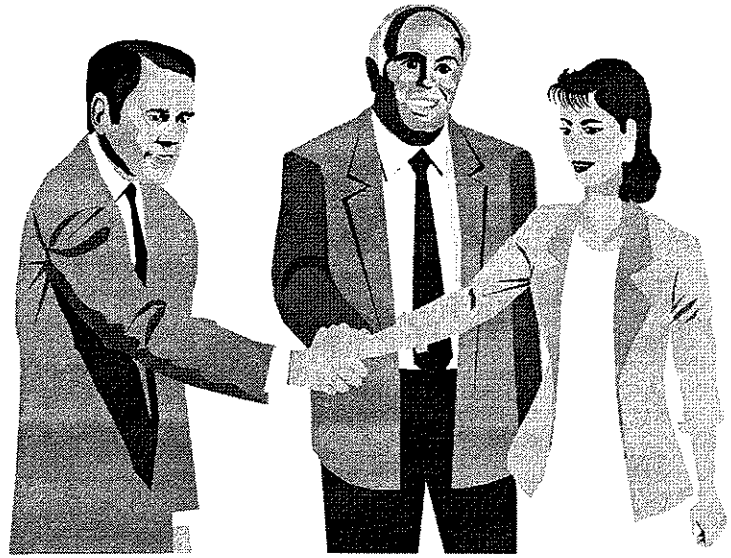

COURSE OBJECTIVES

This course presents the last in a four week series, and is directed at the design of a zoned water system. During this week you will be introduced to the design process for an all-water system and have a chance at practicing all the skills necessary to carry out such a design.

The course is based upon this student text book (binder). It follows the visuals and examples used by the instructor in a step-by-step manner.

The instructor will present principles and sample problem solutions that employ the principles in class. You will work in a design team to practice those principles by applying them to a design project. All problems you work on in class will be portions of the design project. The list at right provides you with the overall objectives of the course.

Objectives:

1- Be able to apply and select room fan coil units

2- Be able to apply and select central air handlers with control valve Cv and water coil

3- Be able to apply and select chillers

4- Be able to apply and select cooling towers

5- Be able to layout and size water piping systems

6- Be able to apply and select centrifugal pumps

7- Be able to apply and select control valves

COURSE OBJECTIVES

- **Be able to:**
- **Apply and select room fan coil terminals**
- **Apply and select central air handlers with control valve Cv and water coil**
- **Apply and select chillers**
- **Apply and select cooling towers**
- **Layout and size water piping systems**
- **Apply and select centrifugal pumps**
- **Apply and select control valves**



COURSE OUTLINE

Module 4 DES700 - Applied Water System Design

Mar-00

TIME	Monday	Tuesday	Wednesday	Thursday	Friday
8-9am	Course Intro.	Select Room Fan Coils	Piping Layout	Chiller Principles	Water Pumps
9-10am	Design Process				
10-11am	Basic Water System Concepts	Air Handling handling Units			Cooling Tower
11a-12					
1-2pm	Water Coils		Pipe Sizing	Chiller PLant	Complete Project
2-3pm	Room Fan Coil Units				
3-4pm		Select AHUs		Chiller Selection	
4-5pm		Control valves			END
5-6pm					

MAJOR COURSE TOPICS

- Design Steps for Zoned Water Systems
- Piping System Basic Concepts
- Water Coil Principles
- Room Fan Coil Principles, Selection, and Placement
- Air Handling Unit Principles and Selection
- Control Valve Principles and Selection
- Water Piping Design, Layout, and Sizing
- Chiller Principles
- Chiller Plant Layout and Chiller Selection
- Water Pump Principles and Selection
- Cooling Tower Principles and Selection

DESIGN PROJECT

- **Locate The design project manual**
  - The last section in your student manual

- **Four Week Objective**

1 - HVAC System Fundamentals	Perform a block and zone load analysis for the casino floor
2 - Constant-Volume, Single-Zone Systems	Design constant-volume, single-zone systems using packaged and split system equipment for a fast food, sit down restaurant
3 - VVT and VAV System Given A Load Analysis	Design a VVT & VAV system for the top floor of an office
4 - Water System Given A Load Analysis	Design a chilled water system serving the 18 hotel floors and the air handlers used in the casino (bottom) and office (top) floors

THE CASINO BUILDING

- See the design project material at the end of this book
  - 19 Story Building
  - Casino - 1st floor
  - Hotel - top 18 floors
  - Alternate office - top floor

HIGH-RISE HOTEL WITH CASINO

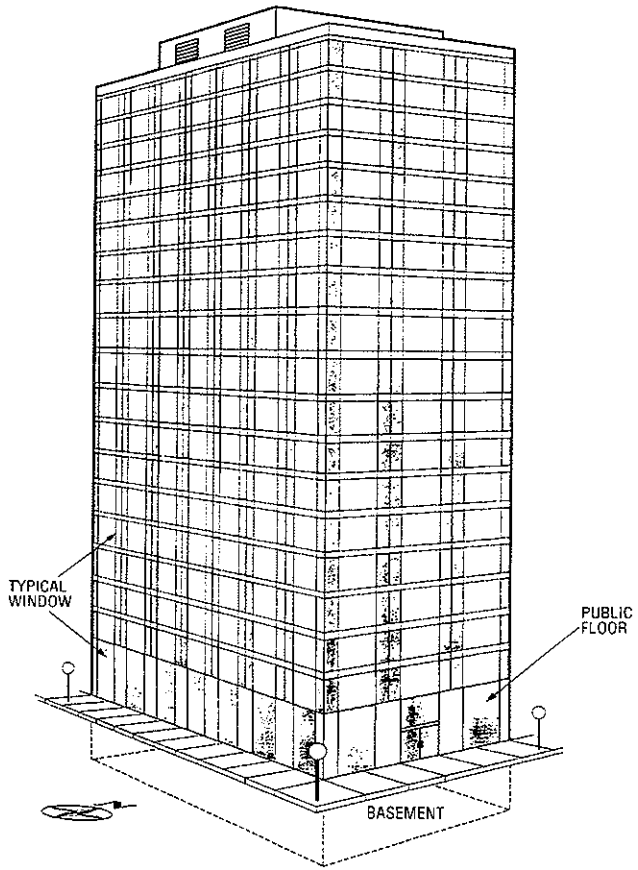

HIGH-RISE HOTEL
CASINO GROUND FLOOR

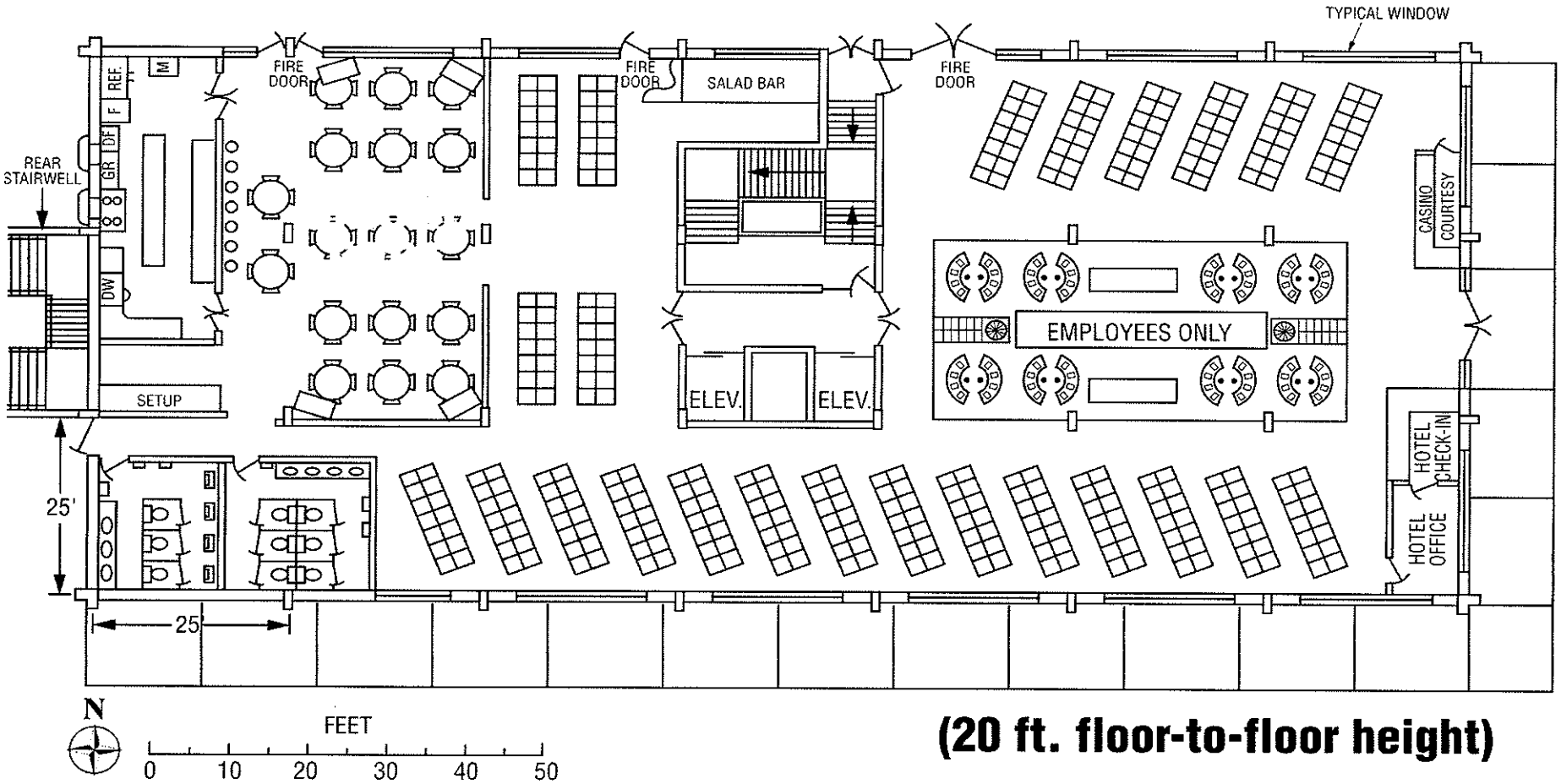

(20 ft. floor-to-floor height)

HOTEL FLOOR PLAN

TYPICAL FLOOR PLAN: (20) 2-BED SUITES / (2) 3-BED SUITES (NORTH) / (2) 4-BED SUITES (SOUTH)

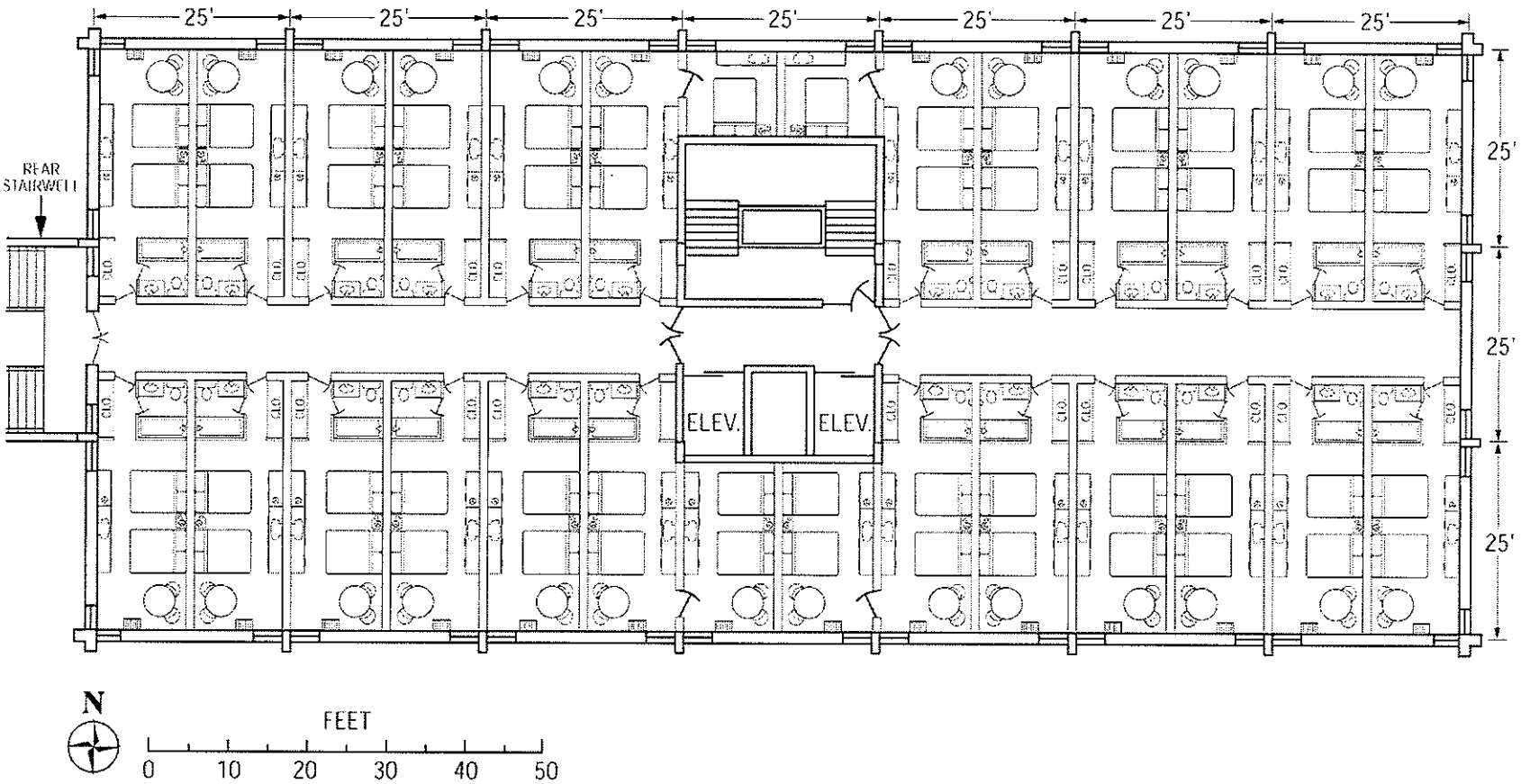

GRADING

- **There will be quizzes as we go (540 points)**
  - Water System Design Steps (40)
  - Basic Water System Concepts (100)
  - Basic Water System Layout (100)
  - Water Coils
  - Chiller Principles #1 (100)
  - Chiller Principles #2 (100)

- **Project (765 points)**
  - 60% Complete item due list
    - » Format of information to be handed in.
  - 05% Arrange items due correctly
  - 25% Justification of assumptions
  - 10% Neatness & readability

PROJECT GRADE

- **Project:**
- 765 possible points
- Grade = points/7.65
- Notice weighting
- Hand in your project in the same sequence

- Zone Identity 010
- Room Fan Coils 135
- Casino AHU's 130
- Piping Layouts 160
- Piping Sizing 130
- Chiller Plant 140
- Neatness, Order 060
- Total 765

WORK SESSIONS

- Work sessions are provided for all subjects taught during the week
- Your Project Manual provides space for answering all questions
- You may attach additional pages of your work if you so desire.

PROJECT GRADE/ RETURN

- **Projects will be collected at the end of the day on Friday**
- **Will be returned to you with grade and diploma**
  - **At the next segment of the course (If registered)**
  - **If not, it will be mailed to you**

DESIGN TEAMS

- Form large group into design teams
- 3 to 4 people per team
- Assign team numbers
- Record team numbers and members



LOCAL RESOURCES

- Breaks
- Lunches
- Restroom Locations
- Telephones
- Fax

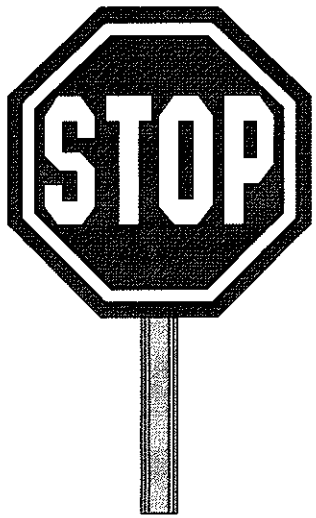

WATER SYSTEM DESIGN STEPS

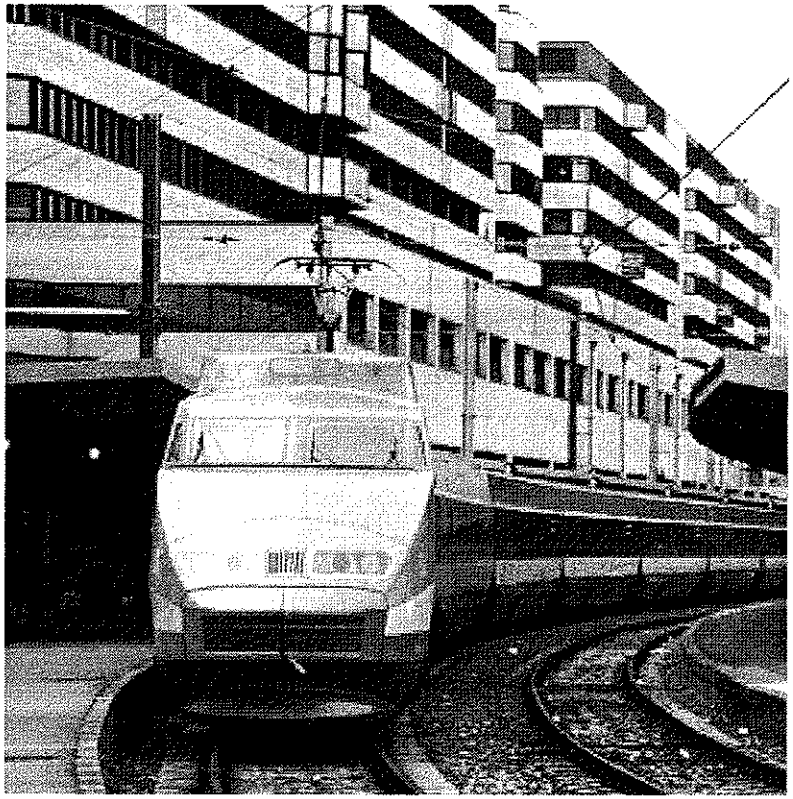

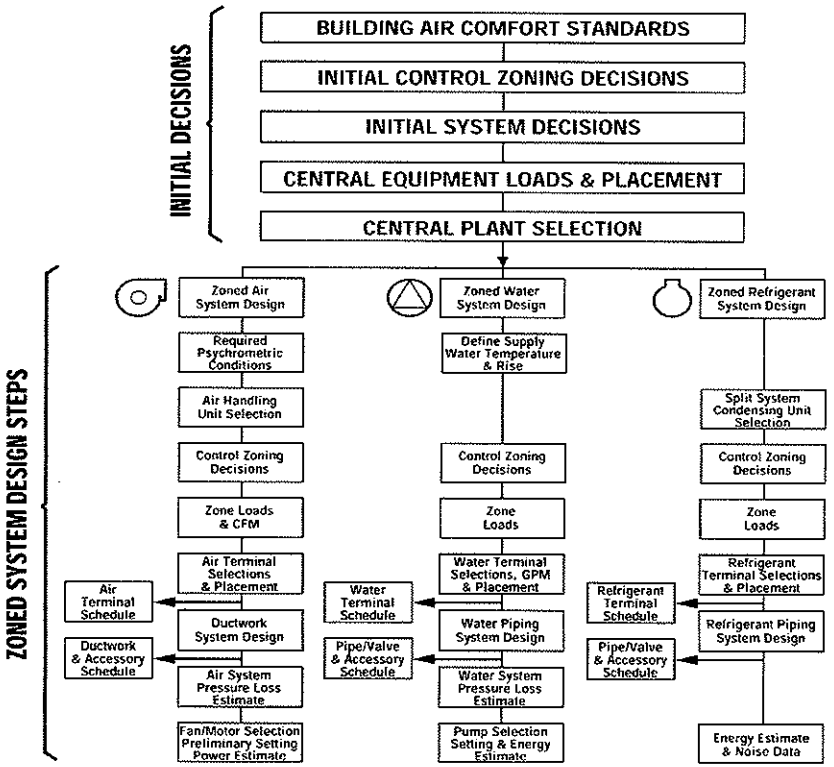

DES700

APPLIED WATER SYSTEM DESIGN

OBJECTIVES

This training module presents the general design sequence for Commercial Applied Zoned Water Systems. This simple step-by-step sequencing, simplifies design efforts and ensures a complete, systematic, and efficient approach.

Module Objectives:

1- Be able to list the design steps for a Zoned Water System

2- Become familiar with the Design Check List procedure for Room Fan Coil Systems

OBJECTIVES

- **Be able to list the design steps for a Zoned Water System**

- **Become familiar with the Design Check List procedure for Room Fan Coil Systems**

THE DESIGN PROCESS

The design steps used for air, water, or refrigerant systems have many steps in common. Most of these steps can be further simplified as shown below.

The general steps to the design of any Zoned System have two major parts:

1- The initial design steps

2- The zoned design steps

Let's take a look at what is involved at each level.

THE DESIGN PROCESS

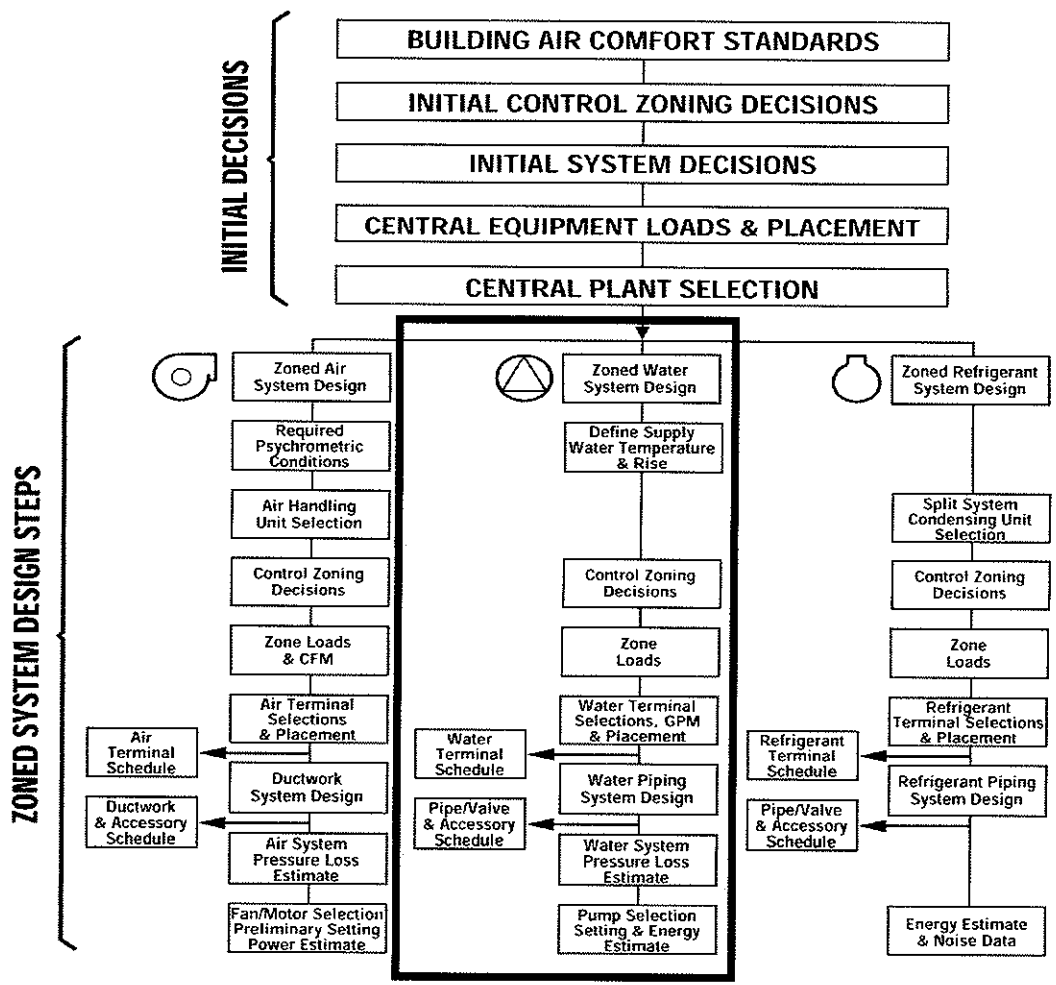

Two Parts:

1-Initial Decisions

2-Zoned System Design Steps

Zoned Water System Design = The focus of this class

INITIAL DECISIONS

The initial decisions shown here are placed in a logical order for convenience. Even though they can proceed in this manner, the steps are so interdependent that no single sequence exists. There are a variety of ways in which building owners, consulting engineers, and design/build contractors approach a job. The approach often depends upon the decision makers priority. For some the priority will be the system, for others the zoning decisions, and for others the location of the equipment will be most important.

Early priorities used in making these initial decisions will limit the options which will be available later on. For example, restrictions on the location of central equipment will limit the field of available system choices.

By working closely with the building owner or developer, a set of priorities can be established which will help limit the designers choices. Regardless of the path through these initial decisions, the designer will arrive at the following conclusions:

1- The **selection** of the central equipment

2- The **location** of the central equipment

In this course, the system has been pre-determined. The Hotel portion of the Casino building will be served by a Fan Coil System. The top floor office and bottom floor Casino will be served by Zoned Air Systems. Air handlers will be located in the basement for the Casino and an air handler located on the top floor for the office zones. A Chilled Water System will serve the entire building. The design of this Chilled Water System is the focus of this class.

INITIAL DECISIONS

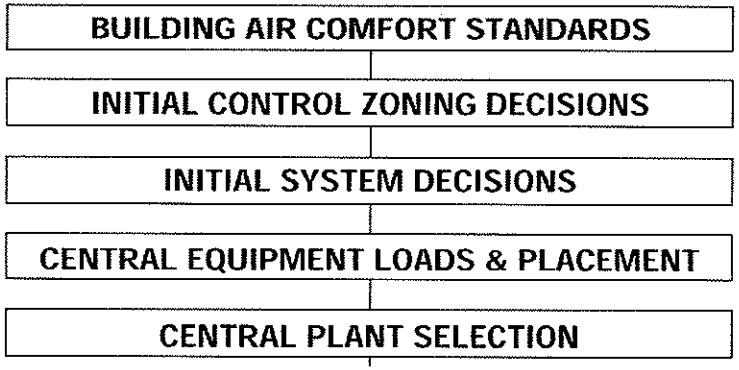

- Initial decisions drive system choice ("big picture").
- Decision maker's priorities limit system choices
- Results in central equipment selection & placement.
- Initial decisions are pre-determined for this course:
  - Room fan coil for the top 18 floors - hotel
  - Air handlers for bottom floor casino
  - Water cooled chillers and boiler in the basement
  - Cooling towers on roof
- Design of water system is the focus of this course

ZONED DESIGN STEPS

Once the overall system has been decided on and the central equipment selected and located, the rest of the design involves the distribution of the cooling and heating to the building as a whole. This is the major purpose of the zoned design steps.

Many details and skill sets are required to carry out these steps. The rest of this week provides the knowledge and skill development needed to carry out the zoned design steps for a Zoned Water System.

Fortunately, the path through these zoned design steps is consistent - regardless of the type of system chosen - air, water, or refrigerant.

Let's look at the common path through a zoned water system design.

ZONED DESIGN STEPS

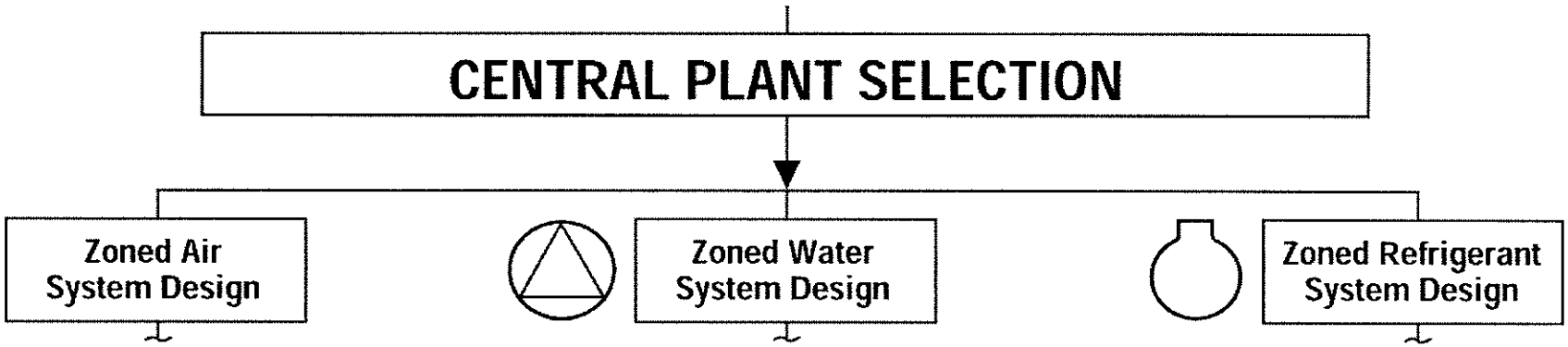

Zoned Design Steps :

- Provide design details for the distribution of cooling and heating to the building
- Many details involved in each step
- Course will develop skills at each step

COMMON DESIGN STEPS

The initial decisions required for the Zoned Water System design are the conditions of the fluid to be used to circulate cooling and heating throughout the building. What temperature should be used and how much water is needed?

Next, the building has to be divided into zones where the comfort conditions can be maintained by the water system - control zones.

Knowing the building zones, the cooling and heating zone loads are calculated to establish the quantity of water to be delivered to each portion of the building and when the fluid should be delivered.

This then leads to the selection of zone terminal devices to distribute the cooling and heating evenly throughout the zone and provide zone comfort.

Next, a Water Distribution System is designed - delivering the water from the cooling and heating sources to the zone terminal products.

Pressure losses are then estimated for the passage of the water throughout the building.

Knowing the water quantity to be delivered, and the resistance to be overcome in the distribution system; the distribution pump is selected and its energy use estimated.

The above steps are common to all Zoned Water System designs, and form the check list followed by all designers.

Before we actually begin the design process for the Casino building we need to first take a look at some basic introductory concepts for water systems.

Let's start by looking at how water systems are classified.

COMMON DESIGN STEPS

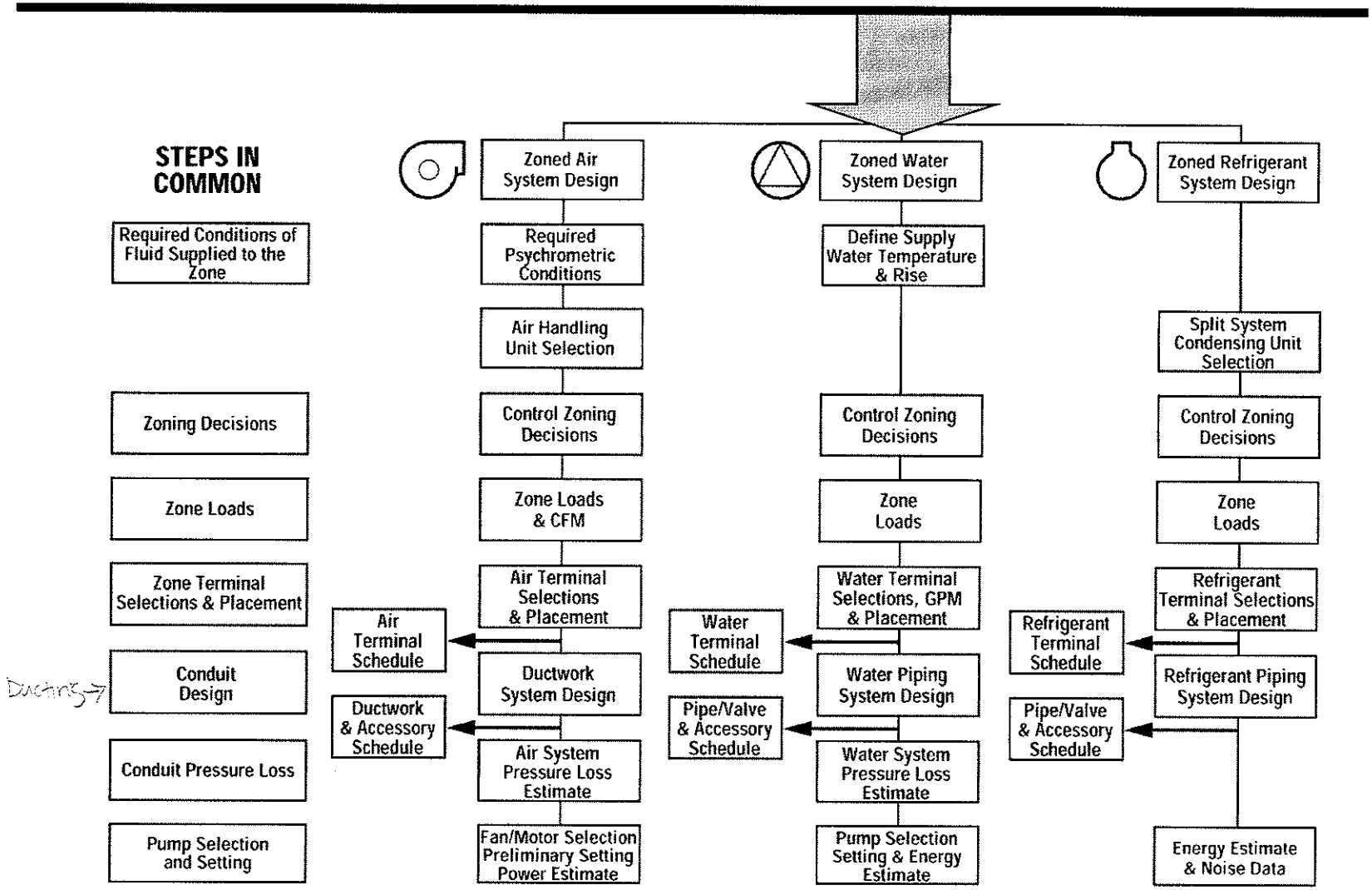

Let's look at a Room Fan Coil design check list

DESIGN CHECK LIST

Since the focus of this week will center around designing a Room Fan Coil System for the Casino Hotel Building, it is useful to have an overall check list to keep on track during the design. The next three pages are an example of such a check list.

We will follow the sequence as laid out in this check list as we progress through this course module. Individual subject's principles will be taught as we need them in moving through the check list. Therefore, the course outline will follow the check list progression.

We will add the subject of air handling units to the check list since we will be involved in selecting air handling units for the Casino floor of the building and integrating them into the overall building Chilled Water System design.

DESIGN CHECK LIST

- The next three pages are an overall check list for designing a Room Fan Coil System
- We will follow this sequence in the course
- Individual subjects will be taught as we go
- Air Handling Units will be added
  - Casino floor requires two of them

DESIGN CHECK LIST

ROOM FAN COIL SYSTEMS:

SYSTEM CLASSIFICATION:	All water.
SYSTEM CHARACTERISTICS:	No ductwork, self-contained controls, minimum space requirements, low first cost. 4 pipe – simultaneous heating and cooling available in adjacent rooms, separate hot and cold circuits avoid hydraulic problems, good control of room conditions. 2 pipe changeover – either heating or cooling provided to entire building.
SYSTEM APPLICATION:	Areas requiring individual control and having reversing transmission loads.
PRECAUTIONS:	Maintenance required in occupied spaces, wet coil in room. 2 pipe changeover – either hot or cold water available, not both – results in unsatisfactory room conditions under certain conditions in intermediate seasons. Remedy – add electric heating element TO terminal unit

DESIGN CHECK LIST

DESIGN STEP	DESIGN REMINDERS
1.Select Module or Room	Based on exposure, partition depth And column spacing
2. Outdoor Peak Design	Typical time – 40°N N module – 3:00 PM July E module – 9:00 AM July S module – 2:00 PM Sept-Oct W module – 5:00 PM July Building block – 4:00 PM Aug
3.Calculate Cooling Loads	A. Peak for each module or room B. Peak black load for building add terminal fan HT gain
4.Calculate Heating Loads	A. For module or room B. For building – include tempering loads of outdoor air
5.Select Terminals	A. Select type of room fan coil unit B. Select for ERSH C. Select for sound levels required D. Select for external static pressure required E. Provide floor level return for heating
6. Ventilation	A. Decide on method of room ventilation b. Locate & select ventilation air handler (if it is chosen method) c. Layout & size any required Ventilation Duct System

DESIGN CHECK LIST

DESIGN STEP	DESIGN REMINDERS
7. Terminal Control	A. Standard factory package most economical B. Water flow control advantageous for temperature control 1. Both wall and unit thermostats available 2. Fan must operate whenever chilled water is circulating 3. Two way valve-pump requires pressure regulating controls 4. Reset hot water temperature compensator C. Fan cycling control 1. Less popular than water flow control 2. Use wall mounted thermostat 3. Provides best room humidity mitigation (automatic cycling)
8. Make Piping Layout	A. Install shutoff valves at unit supply and return connection B. Install necessary vents and expansion tanks C. Size in a conventional manner D. Apply diversity to chilled water piping of the 4 pipe system E. Do not use diversity on any piping system used for heating duty
9. Lay Out Condensate Drain	A. Runout size to correspond to drain pan connection B. System to be gravity flow and sized from charts for open piping
10. Select Refrigeration Machine	A. Fan coils require chilled water plant B. Reciprocating, Screw, Scroll, Centrifugal or Absorption Units are available C. Control chiller leaving chilled water at desired terminal supply water temperature
11. Select Auxiliary Equipment	A. Pumps, valves, cooling towers, heating plant, associated piping

QUIZ

- Answer the quiz questions.
- The instructor will then review the answers with you.

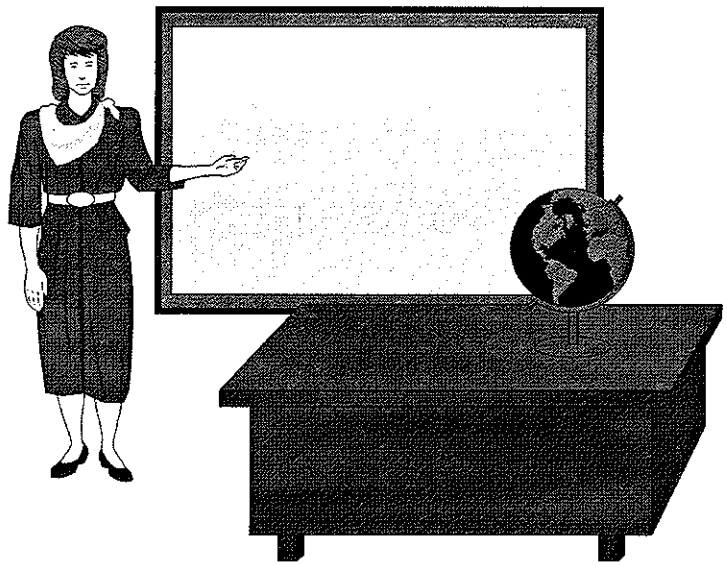

QUIZ

NAME: Quick three Nol (Alpha Engineering Consultant)
DATE: 08 January 2009.

1- The design process for Zoned Water Systems is divided into two major sections. Name them:

1. Initial Decisions
2. Zoned System Design Steps.

2- What are the outcomes of the initial design steps?

Initial decisions drive system choice ("big picture")
Decision maker's priorities limit system choices.
Results in central equipment selection & placement.

3. Name the seven common zoned design steps:

Required Conditions of Fluid Supplied to the zone
Zoning Decisions.
Zone loads
Zone Terminal Selections & Placement
Conduit Design
Conduit Pressure Loss
Pump Selection and Sizing.

END

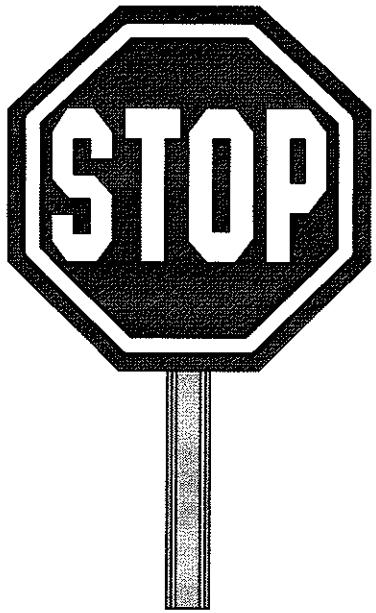

WATER SYSTEM DESIGN STEPS

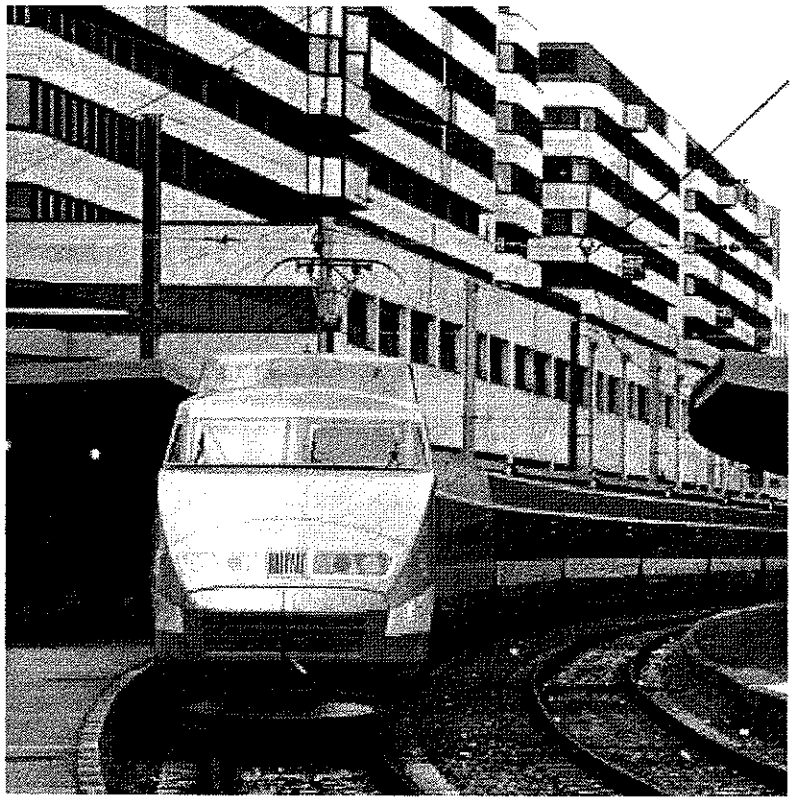

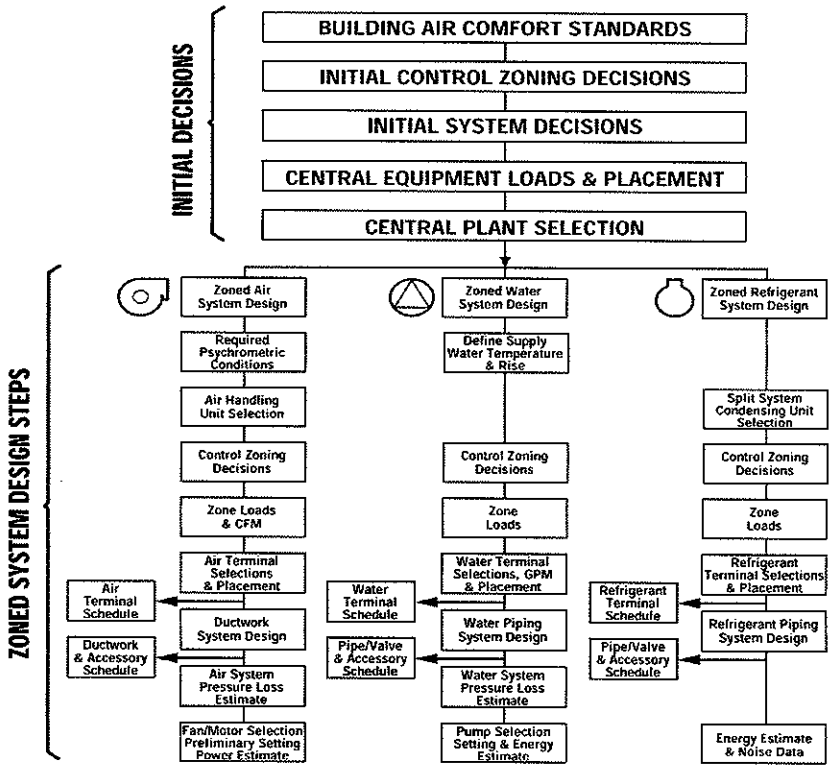

DES700

APPLIED WATER SYSTEM DESIGN

OBJECTIVES

This training module presents the general design sequence for Commercial Applied Zoned Water Systems. This simple step-by-step sequencing, simplifies design efforts and ensures a complete, systematic, and efficient approach.

Module Objectives:

1- Be able to list the design steps for a Zoned Water System

2- Become familiar with the Design Check List procedure for Room Fan Coil Systems

OBJECTIVES

- **Be able to list the design steps for a Zoned Water System**

- **Become familiar with the Design Check List procedure for Room Fan Coil Systems**

THE DESIGN PROCESS

The design steps used for air, water, or refrigerant systems have many steps in common. Most of these steps can be further simplified as shown below.

The general steps to the design of any Zoned System have two major parts:

1- The initial design steps

2- The zoned design steps

Let's take a look at what is involved at each level.

THE DESIGN PROCESS

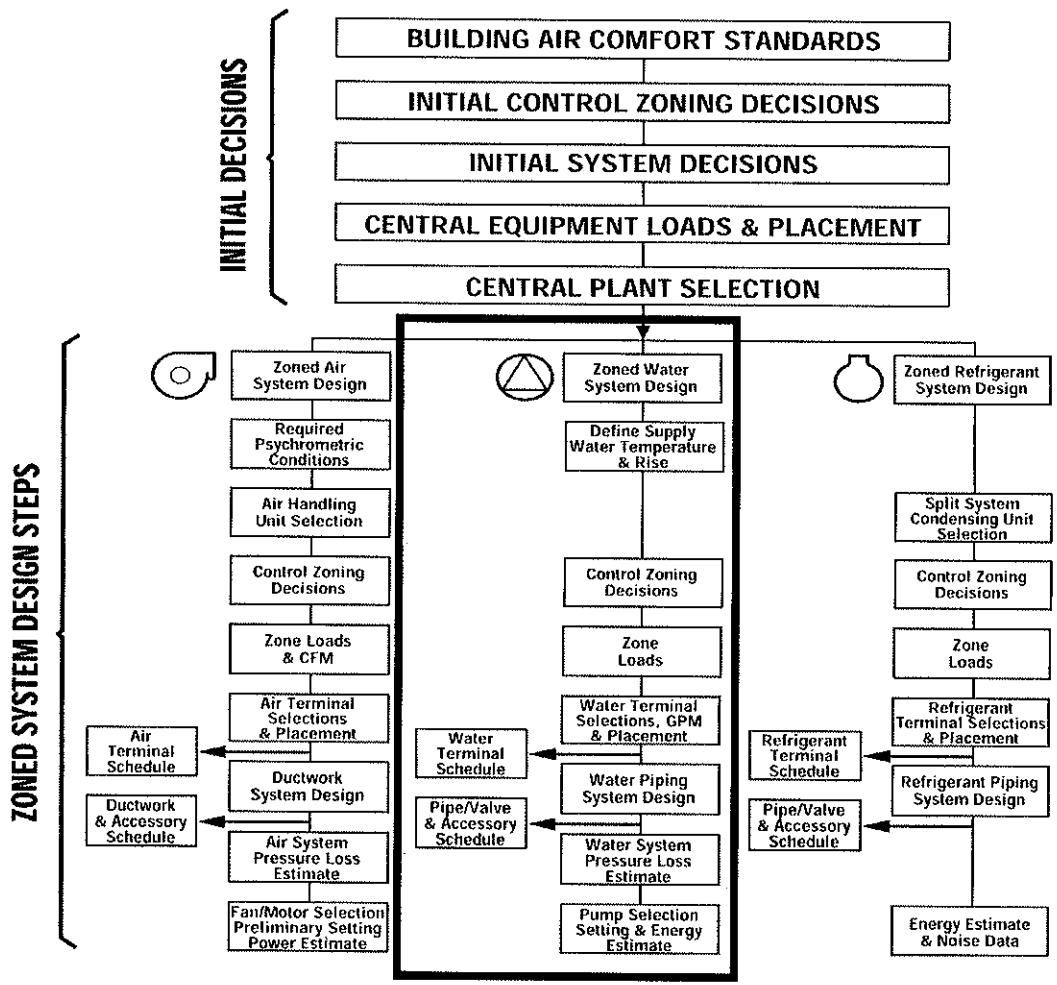

Two Parts:

1-Initial Decisions

2-Zoned System Design Steps

Zoned Water System Design = The focus of this class

INITIAL DECISIONS

The initial decisions shown here are placed in a logical order for convenience. Even though they can proceed in this manner, the steps are so interdependent that no single sequence exists. There are a variety of ways in which building owners, consulting engineers, and design/build contractors approach a job. The approach often depends upon the decision makers priority. For some the priority will be the system, for others the zoning decisions, and for others the location of the equipment will be most important.

Early priorities used in making these initial decisions will limit the options which will be available later on. For example, restrictions on the location of central equipment will limit the field of available system choices.

By working closely with the building owner or developer, a set of priorities can be established which will help limit the designers choices. Regardless of the path through these initial decisions, the designer will arrive at the following conclusions:

1- The **selection** of the central equipment

2- The **location** of the central equipment

In this course, the system has been pre-determined. The Hotel portion of the Casino building will be served by a Fan Coil System. The top floor office and bottom floor Casino will be served by Zoned Air Systems. Air handlers will be located in the basement for the Casino and an air handler located on the top floor for the office zones. A Chilled Water System will serve the entire building. The design of this Chilled Water System is the focus of this class.

INITIAL DECISIONS

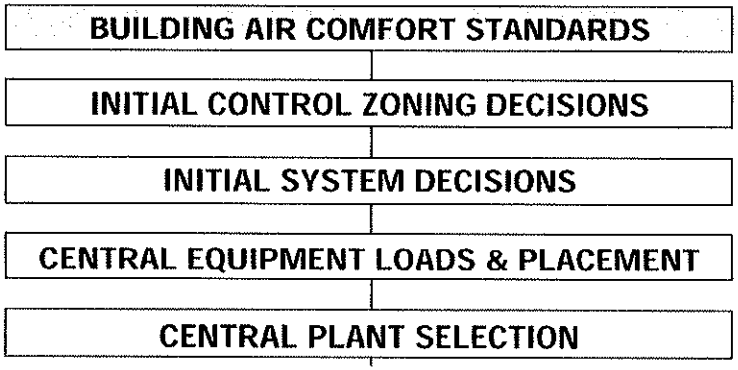

- Initial decisions drive system choice ("big picture").
- Decision maker's priorities limit system choices
- Results in central equipment selection & placement.
- Initial decisions are pre-determined for this course:
  - Room fan coil for the top 18 floors - hotel
  - Air handlers for bottom floor casino
  - Water cooled chillers and boiler in the basement
  - Cooling towers on roof
- Design of water system is the focus of this course

ZONED DESIGN STEPS

Once the overall system has been decided on and the central equipment selected and located, the rest of the design involves the distribution of the cooling and heating to the building as a whole. This is the major purpose of the zoned design steps.

Many details and skill sets are required to carry out these steps. The rest of this week provides the knowledge and skill development needed to carry out the zoned design steps for a Zoned Water System.

Fortunately, the path through these zoned design steps is consistent - regardless of the type of system chosen - air, water, or refrigerant.

Let's look at the common path through a zoned water system design.

ZONED DESIGN STEPS

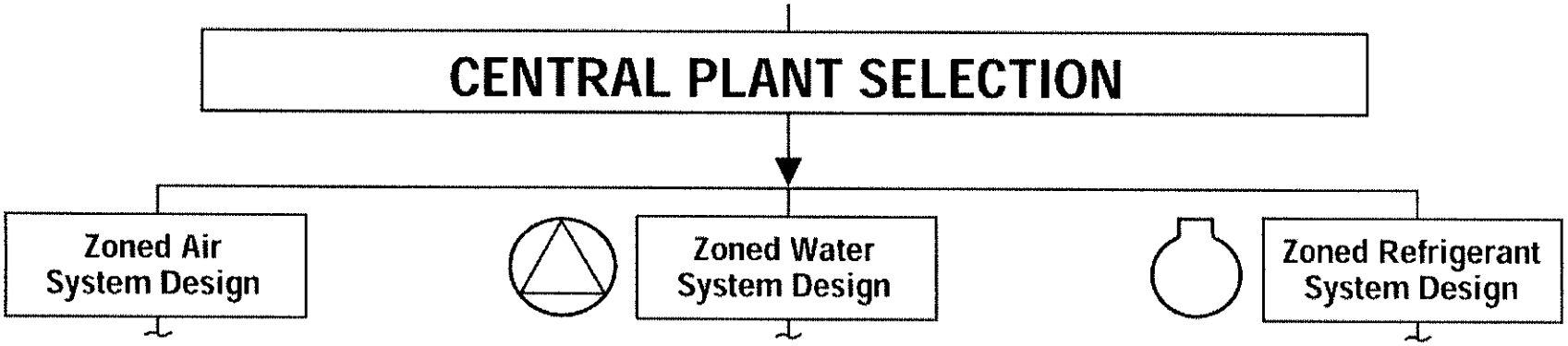

Zoned Design Steps :

- Provide design details for the distribution of cooling and heating to the building
- Many details involved in each step
- Course will develop skills at each step

COMMON DESIGN STEPS

The initial decisions required for the Zoned Water System design are the conditions of the fluid to be used to circulate cooling and heating throughout the building. What temperature should be used and how much water is needed?

Next, the building has to be divided into zones where the comfort conditions can be maintained by the water system - control zones.

Knowing the building zones, the cooling and heating zone loads are calculated to establish the quantity of water to be delivered to each portion of the building and when the fluid should be delivered.

This then leads to the selection of zone terminal devices to distribute the cooling and heating evenly throughout the zone and provide zone comfort.

Next, a Water Distribution System is designed - delivering the water from the cooling and heating sources to the zone terminal products.

Pressure losses are then estimated for the passage of the water throughout the building.

Knowing the water quantity to be delivered, and the resistance to be overcome in the distribution system; the distribution pump is selected and its energy use estimated.

The above steps are common to all Zoned Water System designs, and form the check list followed by all designers.

Before we actually begin the design process for the Casino building we need to first take a look at some basic introductory concepts for water systems.

Let's start by looking at how water systems are classified.

COMMON DESIGN STEPS

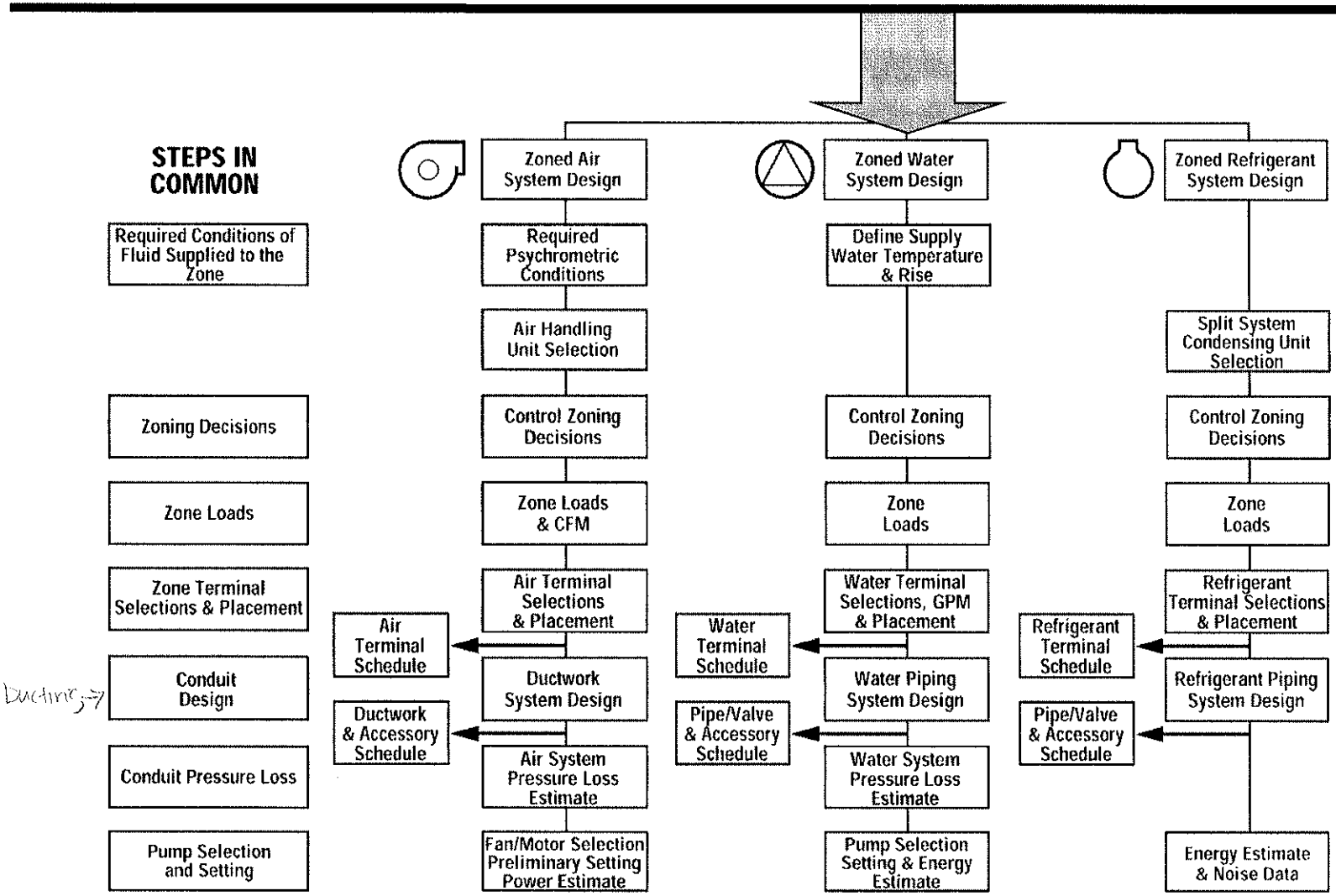

Let's look at a Room Fan Coil design check list

DESIGN CHECK LIST

Since the focus of this week will center around designing a Room Fan Coil System for the Casino Hotel Building, it is useful to have an overall check list to keep on track during the design. The next three pages are an example of such a check list.

We will follow the sequence as laid out in this check list as we progress through this course module. Individual subject's principles will be taught as we need them in moving through the check list. Therefore, the course outline will follow the check list progression.

We will add the subject of air handling units to the check list since we will be involved in selecting air handling units for the Casino floor of the building and integrating them into the overall building Chilled Water System design.

DESIGN CHECK LIST

- The next three pages are an overall check list for designing a Room Fan Coil System
- We will follow this sequence in the course
- Individual subjects will be taught as we go
- Air Handling Units will be added
  - Casino floor requires two of them

DESIGN CHECK LIST

ROOM FAN COIL SYSTEMS:

SYSTEM CLASSIFICATION:	All water.
SYSTEM CHARACTERISTICS:	No ductwork, self-contained controls, minimum space requirements, low first cost. 4 pipe – simultaneous heating and cooling available in adjacent rooms, separate hot and cold circuits avoid hydraulic problems, good control of room conditions. 2 pipe changeover – either heating or cooling provided to entire building.
SYSTEM APPLICATION:	Areas requiring individual control and having reversing transmission loads.
PRECAUTIONS:	Maintenance required in occupied spaces, wet coil in room. 2 pipe changeover – either hot or cold water available, not both – results in unsatisfactory room conditions under certain conditions in intermediate seasons. Remedy – add electric heating element TO terminal unit

DESIGN CHECK LIST

DESIGN STEP	DESIGN REMINDERS
1.Select Module or Room	Based on exposure, partition depth And column spacing
2. Outdoor Peak Design	Typical time – 40°N N module – 3:00 PM July E module – 9:00 AM July S module – 2:00 PM Sept-Oct W module – 5:00 PM July Building block – 4:00 PM Aug
3.Calculate Cooling Loads	A. Peak for each module or room B. Peak black load for building add terminal fan HT gain
4.Calculate Heating Loads	A. For module or room B. For building – include tempering loads of outdoor air
5.Select Terminals	A. Select type of room fan coil unit B. Select for ERSH C. Select for sound levels required D. Select for external static pressure required E. Provide floor level return for heating
6. Ventilation	A. Decide on method of room ventilation b. Locate & select ventilation air handler (if it is chosen method) c. Layout & size any required Ventilation Duct System

DESIGN CHECK LIST

DESIGN STEP	DESIGN REMINDERS
7. Terminal Control	A. Standard factory package most economical B. Water flow control advantageous for temperature control 1. Both wall and unit thermostats available 2. Fan must operate whenever chilled water is circulating 3. Two way valve-pump requires pressure regulating controls 4. Reset hot water temperature compensator C. Fan cycling control 1. Less popular than water flow control 2. Use wall mounted thermostat 3. Provides best room humidity mitigation (automatic cycling)
8. Make Piping Layout	A. Install shutoff valves at unit supply and return connection B. Install necessary vents and expansion tanks C. Size in a conventional manner D. Apply diversity to chilled water piping of the 4 pipe system E. Do not use diversity on any piping system used for heating duty
9. Lay Out Condensate Drain	A. Runout size to correspond to drain pan connection B. System to be gravity flow and sized from charts for open piping
10. Select Refrigeration Machine	A. Fan coils require chilled water plant B. Reciprocating, Screw, Scroll, Centrifugal or Absorption Units are available C. Control chiller leaving chilled water at desired terminal supply water temperature
11. Select Auxiliary Equipment	A. Pumps, valves, cooling towers, heating plant, associated piping

QUIZ

- Answer the quiz questions.
- The instructor will then review the answers with you.

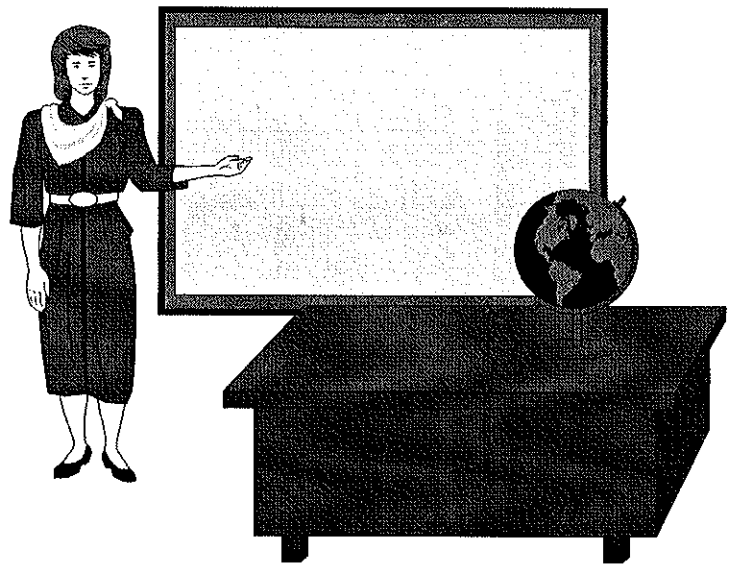

QUIZ

NAME: Quek Hwee Hoi (Alpha Engineering Consultant)
DATE: 28 January 2009.

1- The design process for Zoned Water Systems is divided into two major sections. Name them:

1. Initial Decisions
2. Zoned System Design Steps.

2- What are the outcomes of the initial design steps?

Initial decisions drive system choice ("big picture")
Decision maker's priorities limit system choices.
Results in central equipment selection & placement.

3. Name the seven common zoned design steps:

Required Conditions of Fluid Supplied to the zone.
Zone's Decisions.
Zone loads
Zone Terminal Selections & Placement
Conduit Design
Conduit Pressure Loss
Pump Selection and Setting.

END

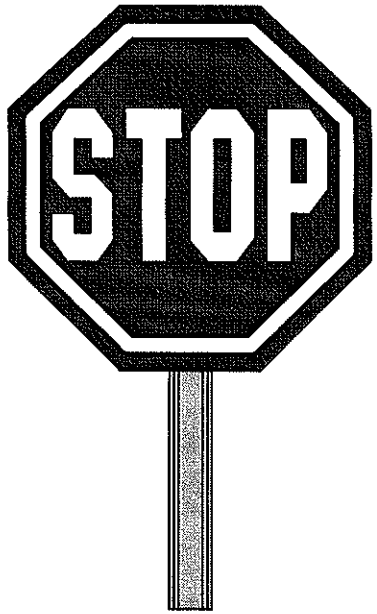

BASIC WATER SYSTEM CONCEPTS

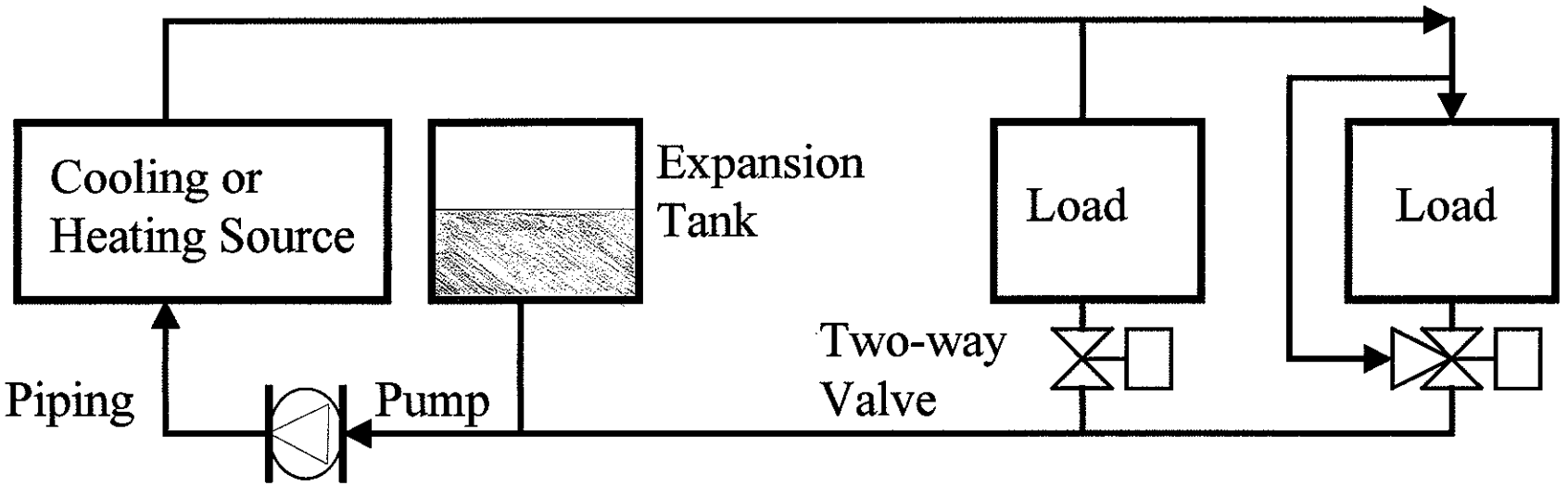

DES700

APPLIED WATER SYSTEM DESIGN

OBJECTIVES

In this section we will discuss some basic concepts behind all water piping designs. We will review water system classifications, general guiding principles of water piping design, typical piping materials, piping support, types of valves and their uses, strainers, expansion tanks, air elimination, and piping accessories necessary to prove system performance.

Upon completion of this section the student should be able to do the following for water systems:

1- List the basic classifications
2- List the three guiding principles of system design
3- List the typical materials used for pipe and fittings
4- Determine the number of supports needed for a given length of water piping
5- Choose types of valves for isolation, balancing, and preventing back flow
6- Select a type of strainer for an application
7- Select and approximate the size of an expansion tank for an application
8- Select and locate the appropriate piping accessories needed to prove system performance

OBJECTIVES

- List the Basic Water System classifications
- List the three guiding principles of system design
- List the typical materials used for pipe and fittings
- Determine support needed for a length of piping
- Choose types of valves for isolation, balancing, and preventing back flow
- Select a type of strainer for an application
- Select and locate an expansion tank
- Select and locate the appropriate piping accessories needed to prove system performance.

WATER SYSTEM CLASSIFICATIONS

Water systems may classified as either **once through**, or **recirculating** types. Recirculating types may be further classified as **closed** or **open** types.

Once Through:
In a once through system the water flows from a source through the system and out to waste. Examples would be city water for condensing and well water for chilling. A pump may or may not be required.

Closed Recirculating:
A Closed Recirculating System is where water is simply circulated through a closed piping loop without coming in contact with air except at an expansion tank. The area of contact by the water with the air at the expansion tank is considered negligible. An example of such a system would be a Chilled Water System for cooling and dehumidifying air.

Open Recirculating:
In an open recirculating type water is pumped from a reservoir through the system and back to the reservoir. The circulated water comes in contact with the air in the reservoir. A typical example would be a Condensing Water System that uses a cooling tower.

WATER SYSTEM CLASSIFICATIONS

- **ONCE THROUGH:**
  - Water flows from a source, through the system, and out to waste.
  - Example: City water for condensing
- **RECIRCULATIING - Closed:**
  - Water is circulated through a closed piping circuit without coming in contact with air.
  - Example: Chilled water circuit.
- **RECIRCULATIING - Open:**
  - Water is pumped from a reservoir through the system and back to the reservoir. The water flows through the air at some point in the circuit.
  - Example: Cooling Tower circuit for condensing

ONCE THROUGH WATER SYSTEM

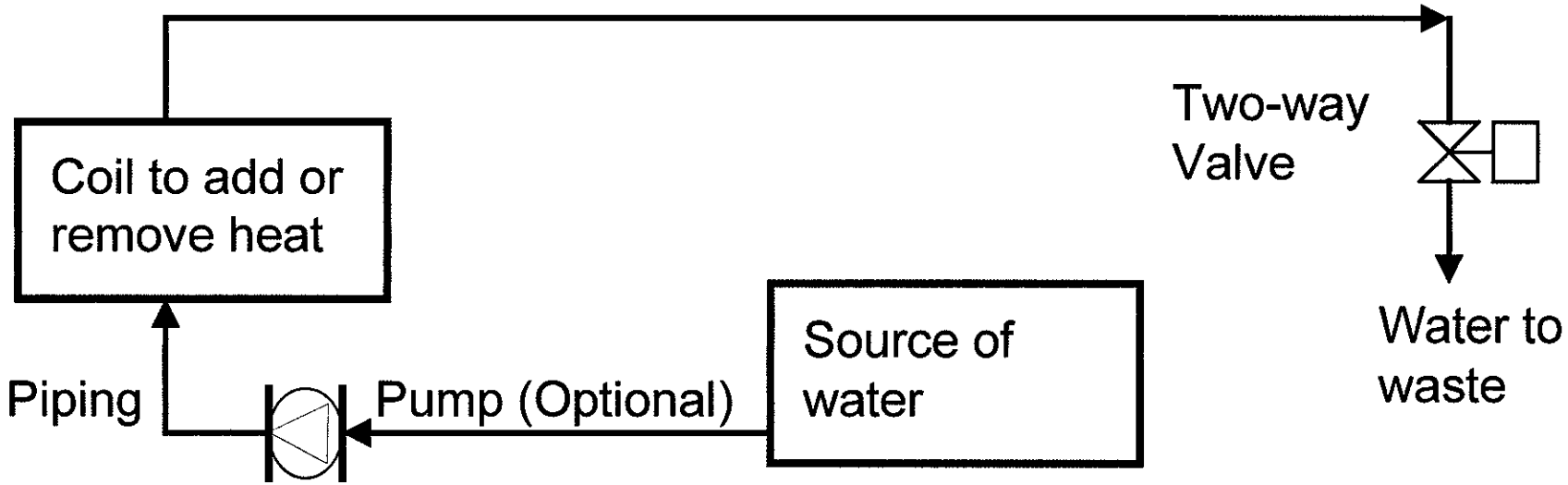

- A source of water
- Water flows through system
- Piping designed to deliver the water (pump optional)
- Water is sent to waste
- Example: City water for condensing

CLOSED WATER SYSTEM (No Water Contact With Air)

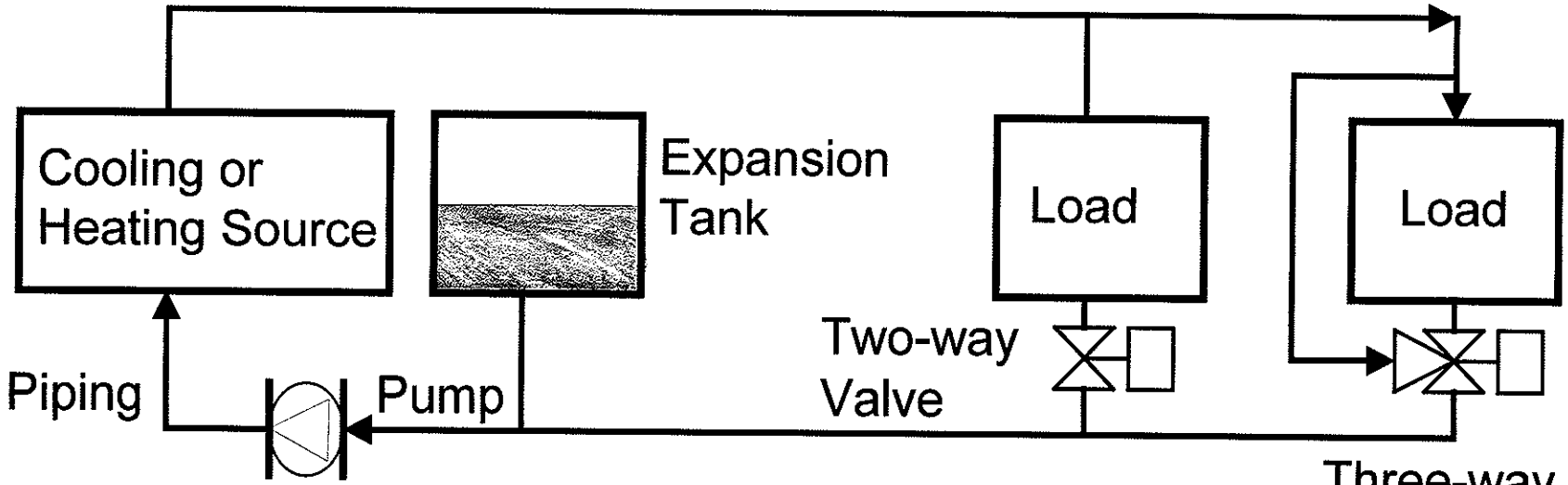

- A cooling or heating source
- Coils that absorb cooling or heating loads
- Two or three-way valves to control the load
- Piping and pump to circulate water
- An expansion tank (insignificant water contact with air)

OPEN WATER SYSTEM (Water Contacts Air)

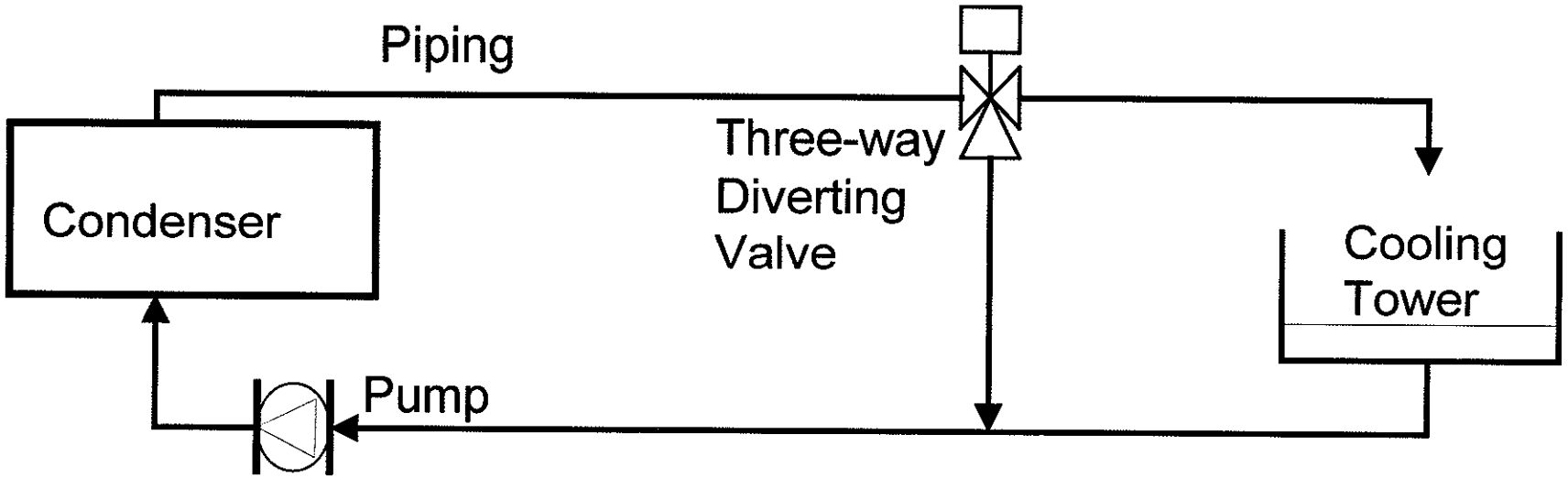

- A source of heat rejection (condenser)
- A cooling tower to reject heat to atmosphere
- 3-way valve to control water temperature to condenser
- Piping and pump to circulate water
- Water comes in contact with air in the cooling tower

ZONE TERMINALS

UNIT VENTILATORS

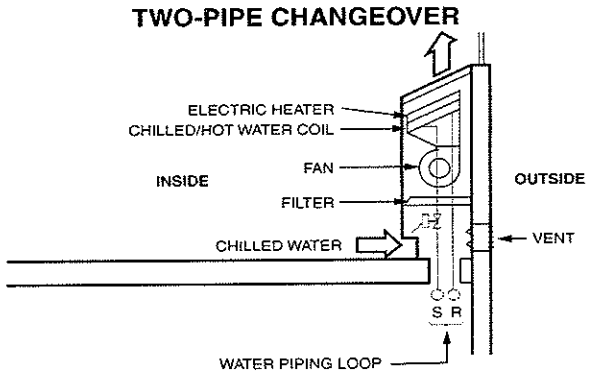

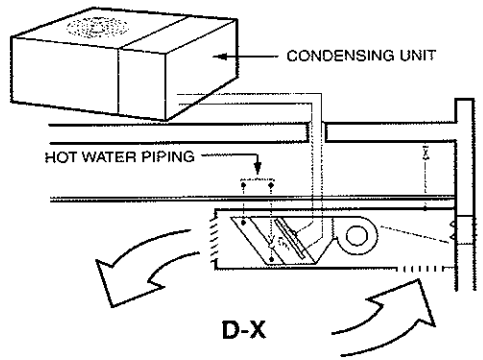

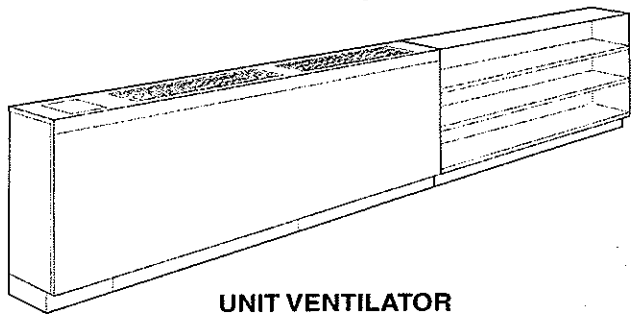

- 1 1/2 - 5 tons cooling capacity (600 - 2,000 CFM)
- All-water or direct refrigeration system
- Fan, air filter, chilled-water or D-X cooling coil, heating coil, outdoor air intake with damper, factory cabinet and controls
- Most often used in school classrooms
- Vertical, floor-mount for in-room applications; horizontal for surface-mount or above-ceiling applications
- Two-pipe and four-pipe units; cooling capacity provided centrally by water chiller and distributed to terminals where zone capacity is controlled by water valve
- D-X version provides cooling capacity locally from D-X cooling coil with remote condensing unit
- Two-pipe changeover and four pipe units; heating capacity provided centrally by boiler and distributed to terminals where zone capacity is controlled by water valve
- Electric resistance heating coil can be selected to provide heat locally
- Will provide up to 100% outdoor air ventilation through wall sleeve or ducted connection
- Electronic (analog), DDC, or pneumatic controls
- Unit or wall-mount thermostat

UNIT VENTILATOR

- PIPING INCLUDES CHILLED-WATER SUPPLY AND RETURN, AND HOT-WATER SUPPLY AND RETURN IF FOUR-PIPE SYSTEM WITH HEATING COIL IN UNIT
- VENTILATION AIR THROUGH EXTERIOR WALL BEHIND UNIT
- CONDENSATE DRAIN REQUIRED AT EACH UNIT (CHILLED-WATER TYPE)

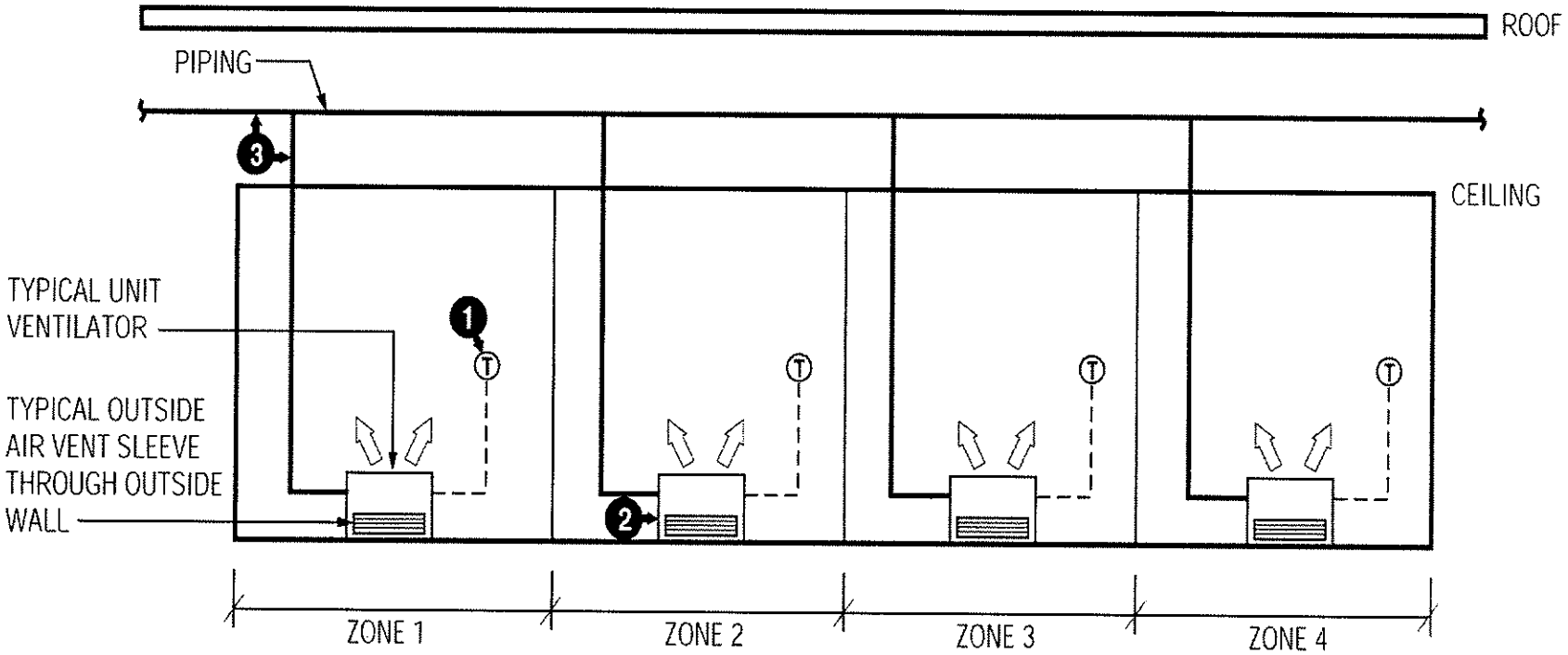

SYSTEM COMPONENTS:

1 – ZONE THERMOSTAT
2 – UNIT VENTILATOR
3 – WATER PIPING

UNIT VENTILATOR

Either as standalone, split system D-X fan coils, or as chilled-water fan coils, the unit ventilator is custom made for the classroom or other places where people assemble. Its generous ventilation capability easily meets ventilation code. However, its filtration efficiency is poor because filtration is accomplished locally by fans which have limited static pressure capability.

Floor-mount units provide outside wall and under-window heat for comfortable winter operation, with no building space required for ductwork.

Modular design permits zoning rearrangement without terminal relocations. Chilled-water versions do not permit easy system expansion, and are not compatible with other existing system types. Central chiller or condensing unit servicing is remote from the occupied space but unit ventilator servicing requires entry.

D-X installed system cost is low to moderate. The cost of the chilled-water version is moderate to high due to the cost of a central chilled-water system, but somewhat less expensive than a comparable fan coil or VAV system. Opcosts vary depending on control strategy and central equipment efficiency, but range from moderate to low.

UNIT VENTILATOR

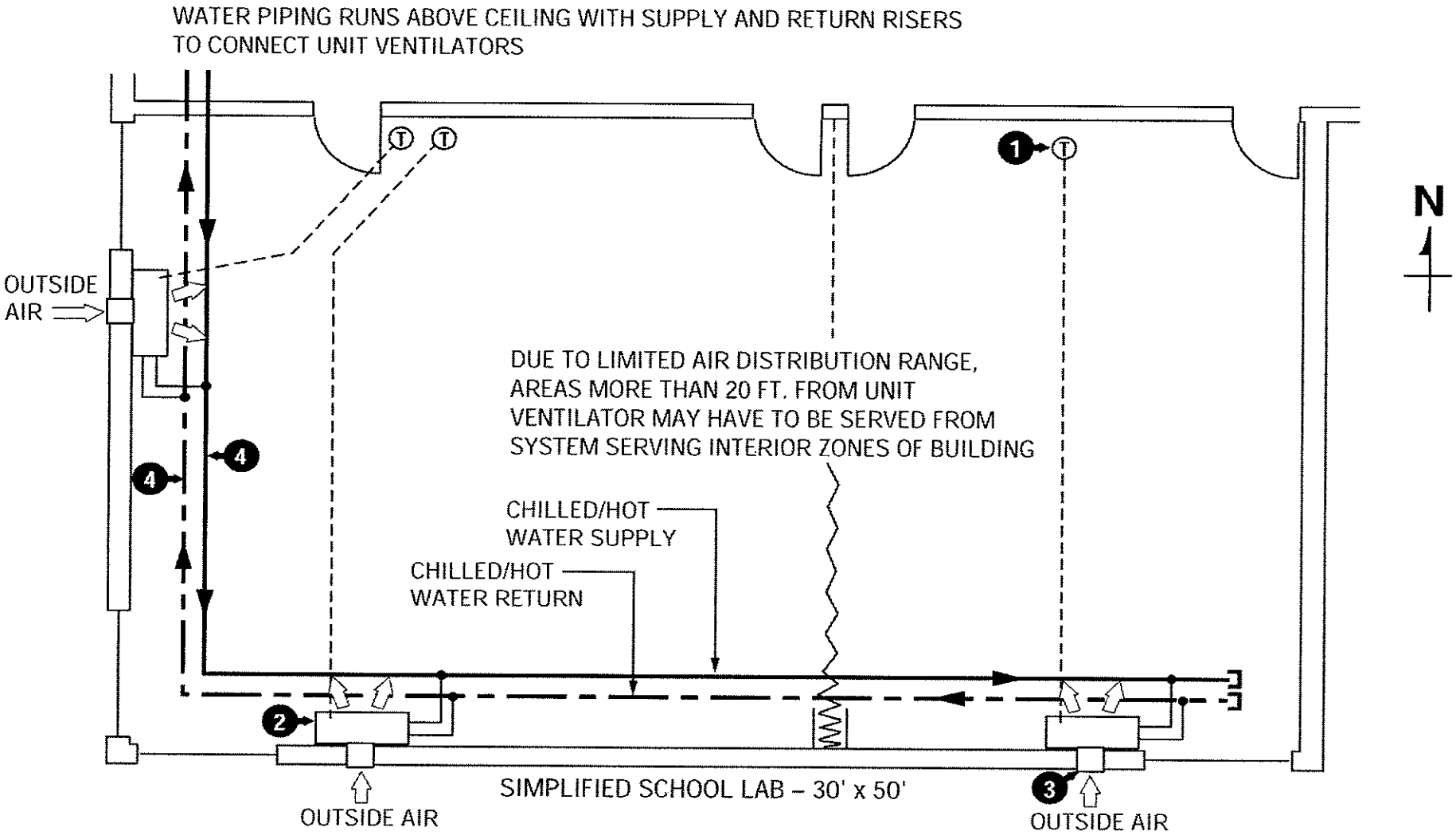

SYSTEM COMPONENTS:

1 – ZONE THERMOSTAT
2 – UNIT VENTILATOR
3 – VENTILATION WALL SLEEVE
4 – WATER PIPING

UNIT VENTILATOR

ADVANTAGES

- Installed cost competitive with some all-air systems and lower than many systems requiring supplementary ventilation
- Tried and true system for school market
- Water distribution requires very little building space
- Low to moderate operating cost
- Long life expectancy
- Offers split system D-X or chilled-water design options
- Quiet operation
- Under-window heating
- No ductwork
- 0 – 100% outdoor air ventilation locally at zone
- Consistent room air motion

DISADVANTAGES

- Moderate to high installed cost
- Requires separate exhaust system to achieve effective ventilation
- Requires condensate drain system from zones
- Many points of electrical power wiring
- More difficult to design than modular packaged systems
- Many points of service
- Maintenance in occupied space
- Humidity buildup at partial cooling load
- Poor filtration
- Filter maintenance tends to be neglected
- Ventilation highly subject to wind velocity, direction, and neighboring objects
- No standby capacity when central equipment fails
- Compromised aesthetics, inside and out
- Not good for upgrading or expanding existing systems

ZONE TERMINALS

CHILLED-WATER (ROOM) FAN COILS

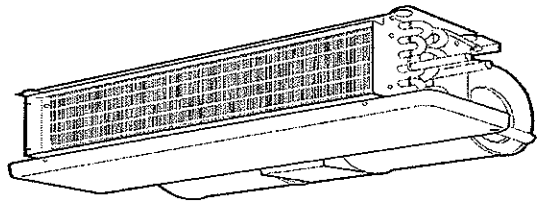

HORIZONTAL, ABOVE CEILING

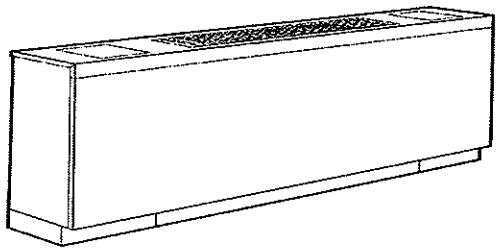

VERTICAL, FLOOR-MOUNT
WITH FACTORY CABINET

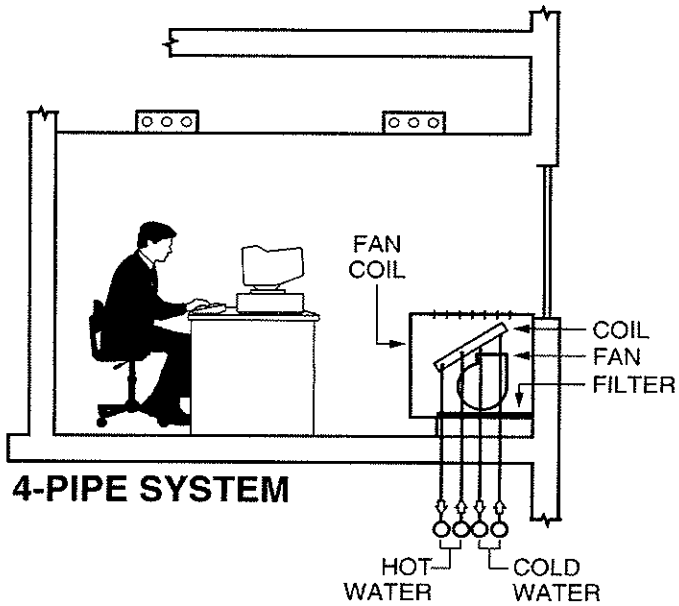

4-PIPE SYSTEM

- 0.5 - 3 tons cooling capacity (200 - 1,200 CFM)
- All-water system
- Fan, air filter, cooling coil, condensate pan, heating coil, water valve(s), and controls
- Vertical, recessed-in-wall, stack (floor-to-ceiling), horizontal surface-mount, and horizontal above-ceiling models*
- Factory cabinet optional
- Optional decorator colors and features
- Three-row or four-row cooling coil
- Cooling provided centrally by water chiller and distributed to terminals where zone capacity is usually controlled by water valve
- Multi-speed (usually three-speed) fan motor
- Heating provided centrally by boiler for two-pipe changeover and four-pipe systems; hot water is distributed to terminals where zone capacity is usually controlled by water valve
- Cooling capacity controlled by fan speed, valve modulation, valve cycling, or a combination of valve and fan control
- Vertical, floor-mount units have optional 0-25% outdoor air wall sleeve with damper to provide local zone ventilation
- Electric heating coil or hot water coil
- Electronic (analog), pneumatic, or DDC controls, factory or field provided
- Unit or wall-mount thermostat

AIR HANDLERS

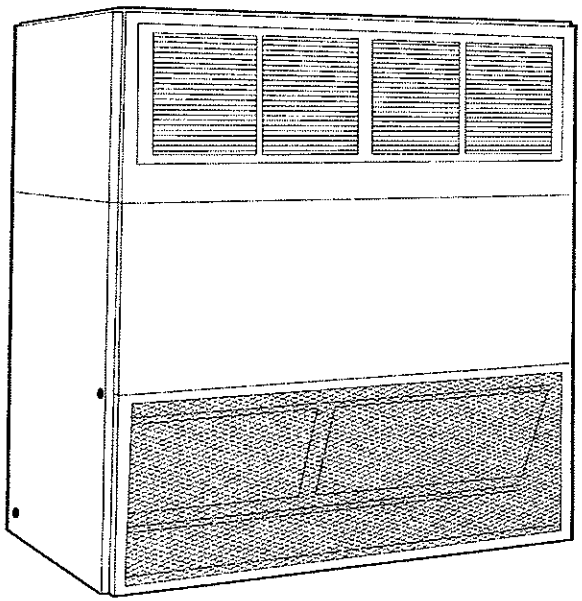

•1 1/2 - 40 tons (200 - 16,000 CFM)
•Fan, D-X coil, filter(s), and metering device
•Vertical or horizontal configuration
•Non-selectable cooling coil
•Free discharge or ducted
•Fan discharge arrangement adjustable on larger sizes [12 1/2 tons up (5,000 CFM up)]
•Steam or hot water heating coil
•Belt-drive fan [5 tons up (2,000 CFM up)]
•Direct-drive fans are multi-speed

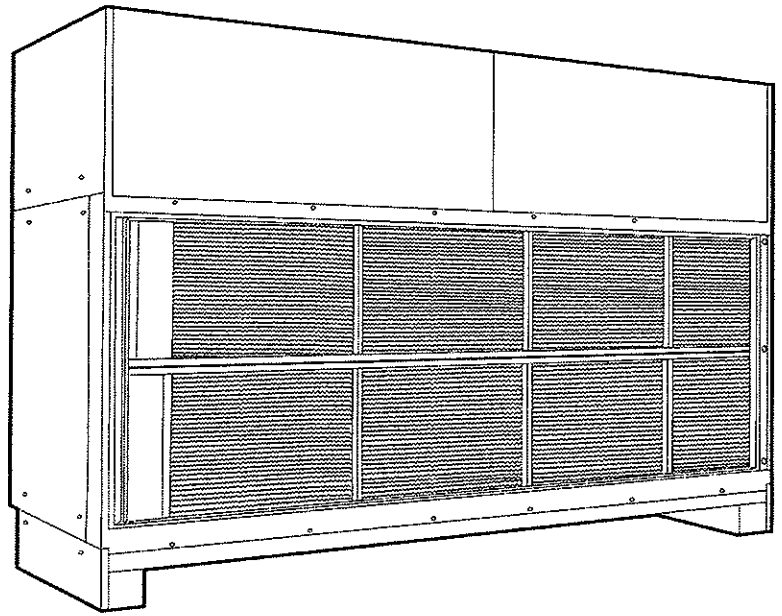

•1 1/2 - 30 tons (600 - 12,000 CFM)
•Fan, chilled-water cooling coil, chilled-water valve, and filter(s)
•Vertical or horizontal configuration
•Selectable cooling coil on some models - 4,6, and 8 rows are common choices; non-selectable coils on others
•Free discharge or ducted
•Fan discharge arrangement adjustable on larger sizes [12 1/2 tons up (5,000 CFM up)]
•Hot water, steam, or electric resistance heating coil
•Belt-drive fan [5 tons up (2,000 CFM up)]
•Direct-drive fans are multi-speed

CHILLED-WATER ROOM FAN COIL

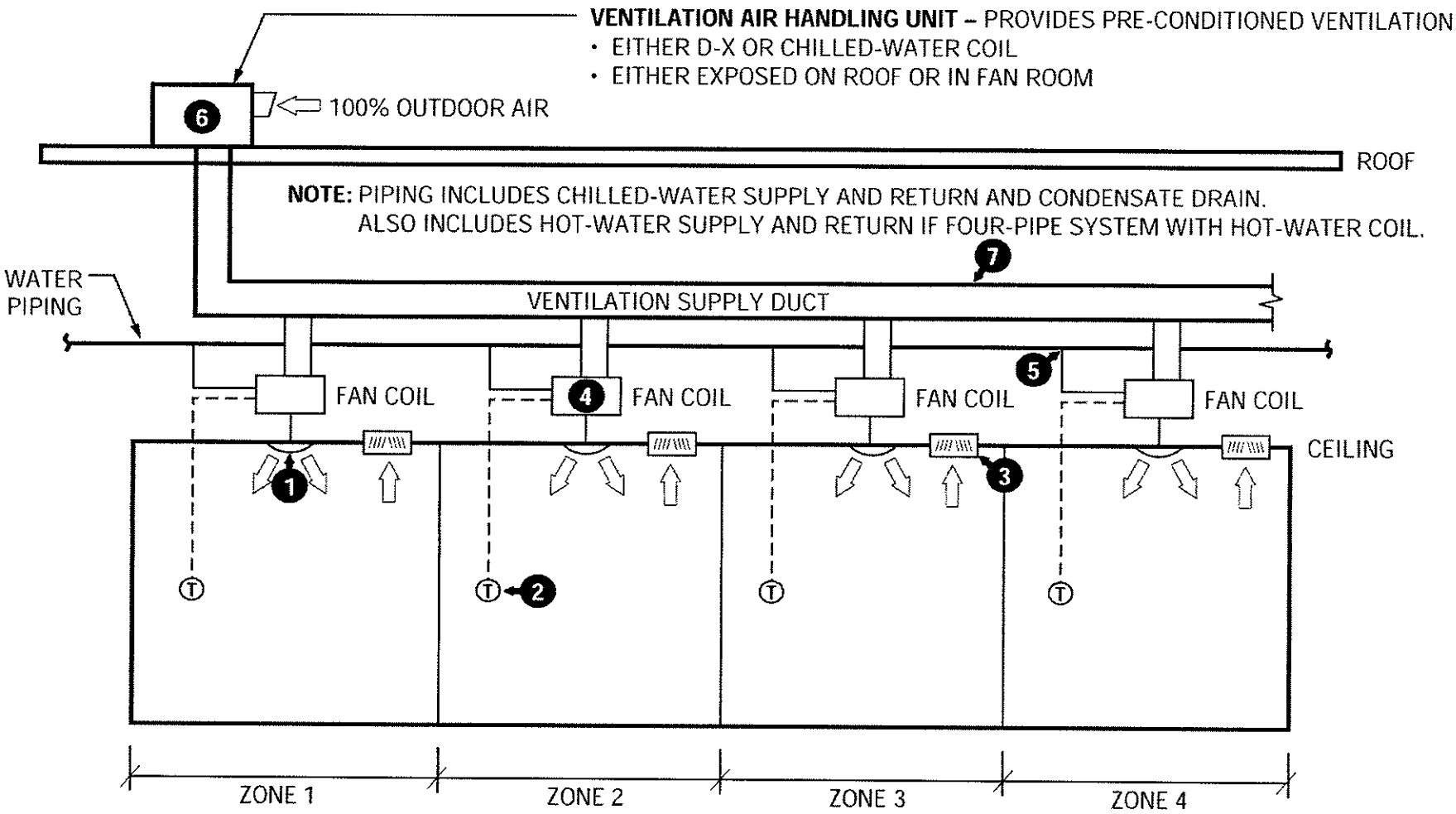

SYSTEM COMPONENTS:

1 – SUPPLY DIFFUSER
2 – ZONE THERMOSTAT
3 – RETURN GRILLE
4 – FAN COIL
5 – WATER PIPING
6 – AIR HANDLING UNIT
7 – DUCTWORK

CHILLED-WATER ROOM FAN COIL

Duct space requirements are minimized by locating the air handling units at or within the rooms. Reasonable sound levels are typical because the refrigeration equipment is remote from the occupied zone. Ventilation requirements are satisfied by an independent ventilation system which cools, dehumidifies, tempers, and humidifies, depending upon the design of the system.

High-efficiency room air filtration is not practical because the unit fans cannot overcome high air pressure drop. The difficulty of maintenance depends upon the number of units and their location, whether under the window or above the ceiling.

Energy consumed by the unit fans is low because the air friction losses are low. The system energy consumption varies depending upon the efficiency of the central water chiller.

Installed system cost is low for a two-pipe water system, which usually will not provide satisfactory comfort in spring or fall weather. Costs are greater for four-pipe systems which can simultaneously provide cooling in one zone and heating in another. System costs also depend upon the capacity, capability, and arrangement of the ventilation system.

CHILLED-WATER ROOM FAN COIL

NOTE: CEILING RETURN AIR PLENUM SHOWN; DUCTED RETURN ALSO POSSIBLE.

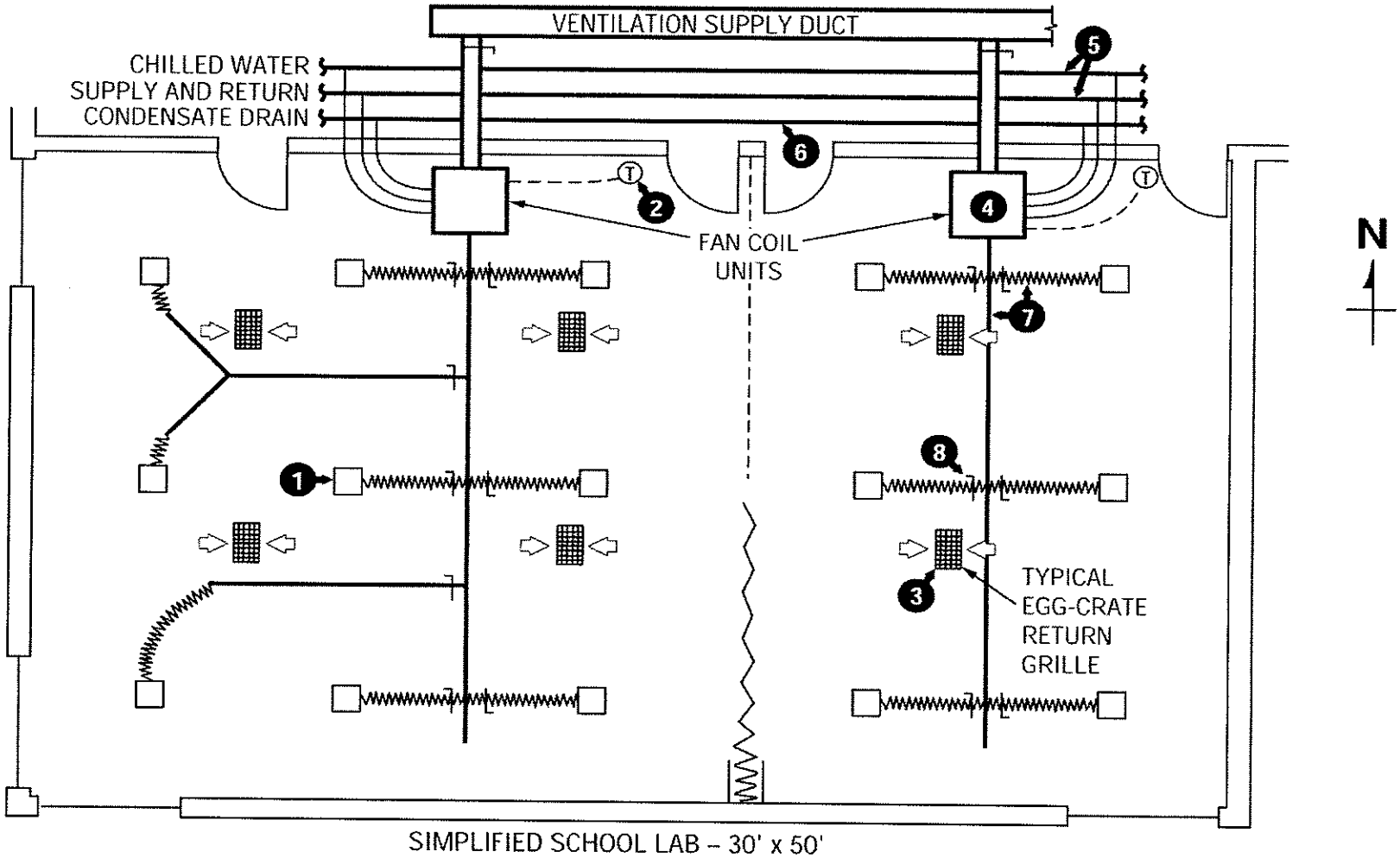

SYSTEM COMPONENTS:

1 – SUPPLY DIFFUSER
2 – ZONE THERMOSTAT
3 – RETURN GRILLE
4 – FAN COIL
5 – WATER PIPING
6 – CONDENSATE PIPING
7 – DUCTWORK
8 – BALANCING DAMPER

CHILLED-WATER ROOM FAN COIL

ADVANTAGES

- Low to moderate operating cost
- Water distribution, ventilation, and exhaust systems require less building space than all-air system
- Long life expectancy
- Quiet operation
- Under-window heating with perimeter floor-mount units
- Versatile terminal style and location
- Consistent room air motion
- Good exterior aesthetics
- Good interior aesthetics (above ceiling units)
- Central electronic control features available

DISADVANTAGES

- Moderate to high installed cost
- Requires separate ventilation and exhaust systems
- Requires condensate drain system from zones
- Many points of electrical power wiring
- More difficult to design than modular packaged systems
- Many points of maintenance
- Maintenance in occupied space or above ceiling
- Humidity tends to build up at partial cooling load (ventilation system must provide part-load latent capacity to avoid this)
- Poor room air filtration
- Filter maintenance tends to be neglected
- No standby capacity when central equipment fails
- Compromised interior aesthetics with in-room units
- Not good for upgrading or expanding other systems

HIGH-RISE HOTEL

CHILLED-WATER FAN COILS WITH SUPPLEMENTARY VENTILATION

TYPICAL INTERMEDIATE FLOOR

- Chilled-water with stack room fan coils and supplementary ventilation system
- Electric resistance heat in fan coil units
- Zone data is for cooling

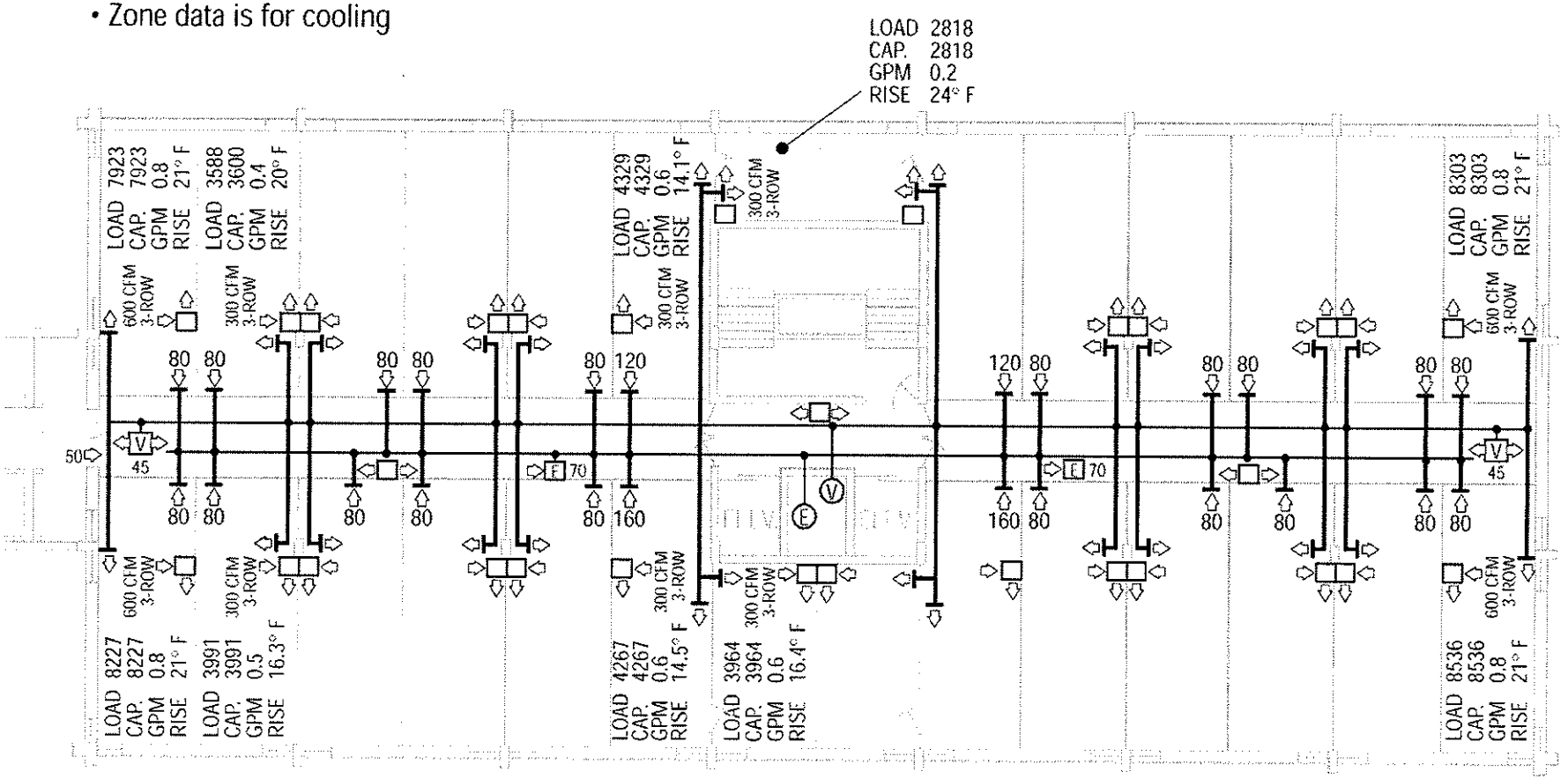

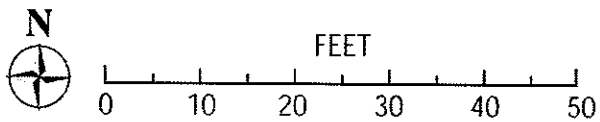

03_DES700_BasicWaterSystem_Ver3.0.0_MC

SYSTEM COMMENTS

CHILLED-WATER FAN COILS WITH SUPPLEMENTARY VENTILATION

- Chilled-water fan coils supply cooling and heating capacity to all rental rooms as well as hallways. There is one fan coil per room, one in each wing of the hallway, and one in the hallway entry area. Cooling capacity is controlled by a factory-supplied, modulating two-way valve in each fan coil unit. A more humid climate may demand fan speed control instead. The thermostat is a remote wall-mounted type.
- Two central water-cooled, centrifugal chillers supply chilled water to the fan coils at a design supply water temperature of 44° F. Two chillers are used, rather than one, to provide standby and improve efficiency by keeping the lead chiller fully loaded whenever possible. A computerized lead/lag control system alternates the chillers as lead and lag chiller so that wear on the two is about equal. Two chillers, each sized for about 70% of peak load, ensure a minimum of 70% standby capacity when one chiller is shut down for routine servicing or repair.
- The centrifugal chillers are located in the basement equipment room. Two galvanized sheet metal, centrifugal fan cooling towers complement the chillers. They are located in the rooftop equipment room and ducted to the outdoors.
- Heating is provided by an electric resistance heater in each fan coil. Hot water is an option which was not exercised for this Las Vegas job. Heating loads are moderate and short in duration, making the cost of a central boiler with piping to all fan coils a poor investment. The payback period is simply too long.
- The fan coil units are designed to stack up from floor to floor. The factory casing runs from floor to ceiling and encloses coils, filter, fan, controls, and wiring, as well as supply, return, and condensate piping risers. The result is a prefabricated, factory-supplied riser piping system enclosed within the units. No extra soffits or chases are required in the building to accommodate the piping. The stack fan coil units in most rooms are mounted back-to-back, cutting the required riser piping in half. The largest riser section on this job is 1¼ inches.
- A reverse-return piping system is used for the risers. This requires three risers in each fan coil, as compared with only two for a direct-return system. If a return loop is installed in the rooftop equipment room, only two risers are required to achieve reverse-return. The benefit of reverse-return is a self-balancing system and quiet unit valve operation, which is very significant in a building of this height. The loop feeding the risers is located in the first floor ceiling space. It also uses a reverse-return design.
- The fan coils on single exposures supply about 300 CFM of air while those on the corner supply about 600 CFM. Direction of air discharge and return are shown with arrows. The supply grille is high, providing direct, horizontal discharge toward the outside wall, which ensures good room air mixing and circulation. The return grille is low.
- Ventilation air is supplied by a separate ventilation system in quantities designed to match the exhaust. A makeup central station air handler conditions the outdoor air to room design dry bulb temperature, thereby handling all outdoor air load centrally. This air handler is located in the equipment room on the roof.
- Exhaust is handled by a central fan located in the equipment room on the roof. Zone exhaust CFMs are shown.
- The ventilation system terminates in each room at an extruded aluminum grille. The duct passes through a soffit located in each room above the coat rack, beside the entry door. The exhaust terminates at an extruded aluminum grille in each bathroom. The hallway has ventilation and exhaust grilles ducted from above the ceiling.
- The exhaust and ventilation ducts pass through the drop ceiling area in the hallway. 2,250 CFM is ventilated directly to each floor. An additional 50 CFM is relieved into the hallway at each floor from the west stairwell (as for PTAC design). Therefore, 2,300 CFM is exhausted from each floor.
- Exhaust and ventilation shafts run through the mechanical chase between the elevators. Fire dampers are required where ventilation and exhaust mains, which feed each floor, penetrate a fire-rated wall.

ZONE TERMINALS

INDUCTION TERMINALS

TWO-PIPE VERTICAL UNIT

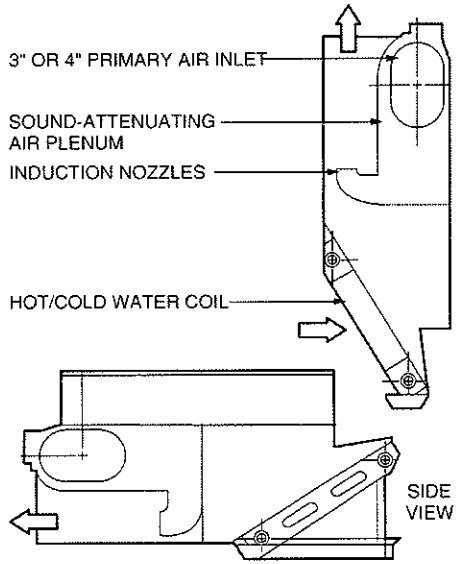

TWO-PIPE, HORIZONTAL ABOVE-CEILING UNIT

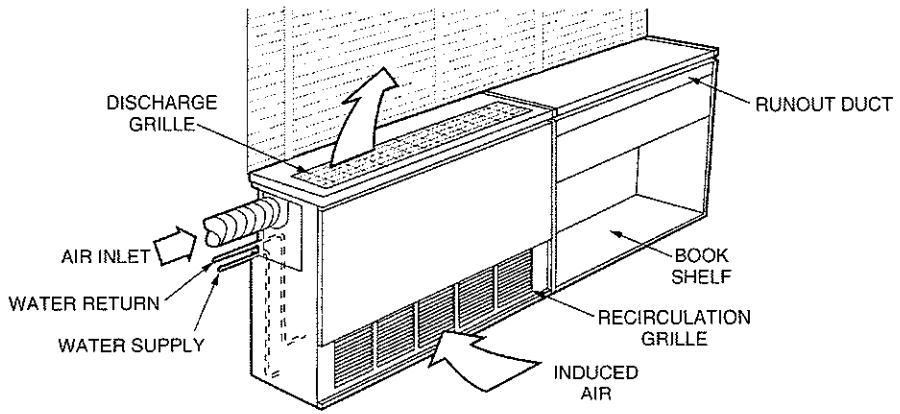

- 20 - 150 CFM primary air
- 1,800 - 10,000 Btuh cooling capacity
- Air-water system
- Sound-attenuating plenum with air balancing damper, air nozzles, water coil, condensate pan, lint screen, and controls; factory cabinet optional Vertical, floor-mount, or wall-mount units; horizontal units for ceiling surface-mount or above drop ceiling
- Two-pipe units have single-row coil
- Four-pipe units have two single-row coils in series
- Primary air passing through nozzles induces room air to flow over terminal coil(s)
- Cooling and/or heating capacity provided centrally by central station air handler, which provides primary air for ventilation, latent cooling capacity, and motive power for air circulation at zone
- Constant CFM to each zone; temperature of primary air varies according to system control strategy
- Cooling provided centrally by water chiller and distributed to terminals where zone capacity is controlled by water valve
- Two-pipe changeover and four-pipe systems; heating provided centrally by boiler and distributed to terminals where zone capacity is controlled by water valve
- Some two-pipe applications may require baseboard electric heat in selected zones
- High-velocity supply duct; 3—4 inch runout to terminal
- Series feed runout ducting through one unit to next
- When primary air is 100% outdoor air (most jobs), no return ducting required; exhaust system removes air from rooms
- Controls are factory valves on terminal coil(s)
- Controls are factory-installed or field-installed
- Electronic (analog), pneumatic, or DDC controls
- Wall-mount thermostat typical

CONDUIT INDUCTION SYSTEM

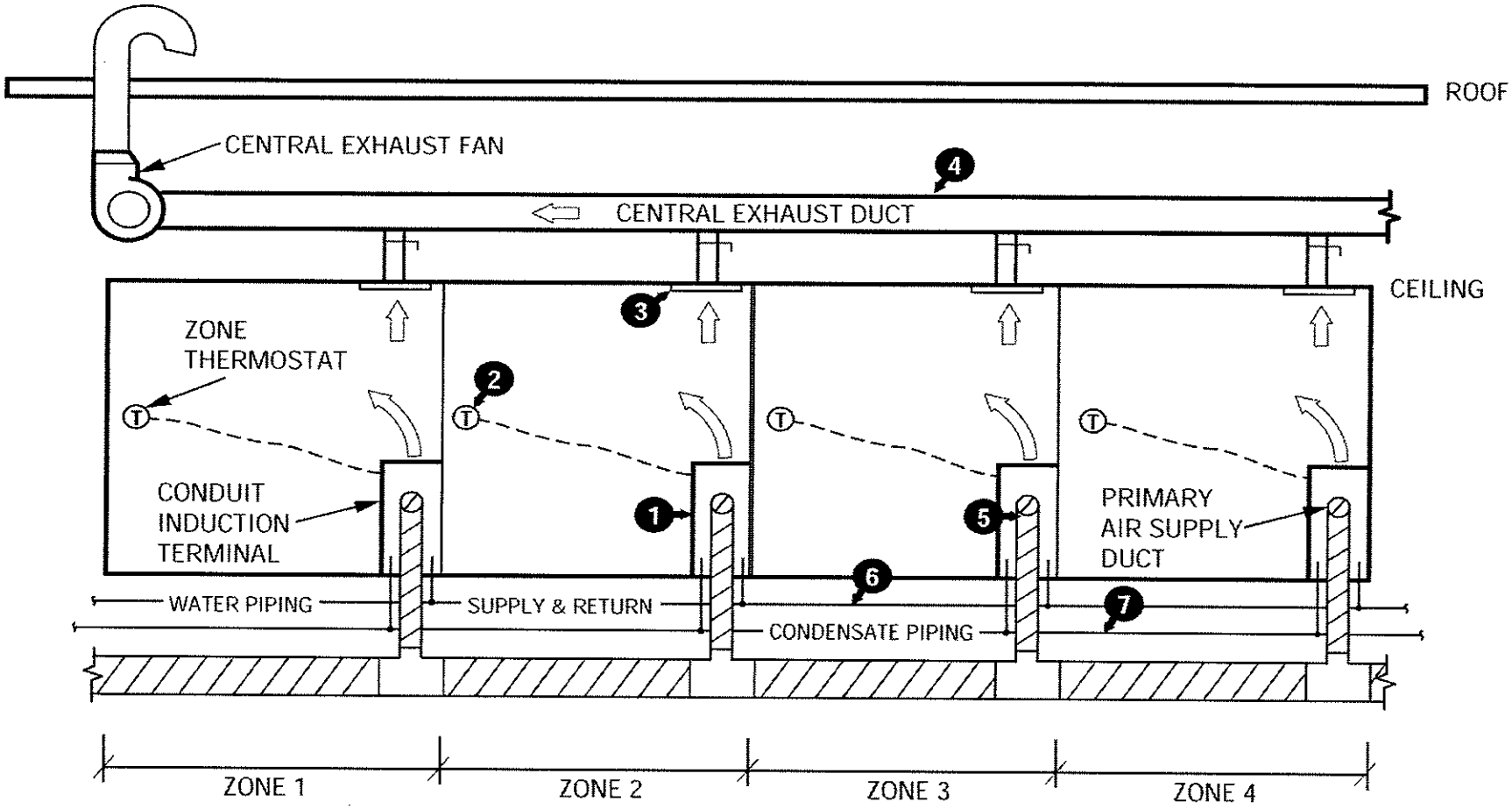

SYSTEM COMPONENTS:

1 – INDUCTION TERMINAL
2 – ZONE THERMOSTAT
3 – EXHAUST GRILLE
4 – EXHAUST DUCT
5 – SUPPLY DUCT
6 – WATER PIPING
7 – CONDENSATE PIPING

CONDUIT INDUCTION SYSTEM

Ventilation and consistent room air circulation are virtues of the conduit induction system. Small, high-velocity supply ducts carry treated outdoor air which simultaneously delivers zone ventilation, cooling or heating capacity, and the motive force necessary for quiet room air circulation.

Unlike many terminal products, latent cooling capacity can be maintained, even at partial cooling loads, by the constant volume primary airstream, which is centrally conditioned, filtered, and controlled.

There is no fan in the zone terminal; therefore, electrical system installation costs are reduced when compared to systems using a local compressor and/or fan. With no fan in the terminal, zone noise levels and maintenance are low. The terminals normally provide all zone heating, cooling, and ventilation needs. However, strip heaters strategically located in some critical zones may reduce operating costs and make intermediate season operation more manageable in certain cases.

Zone capacity is provided by a combination of primary air and a water coil. Many zone/system control strategies exist. The primary air is normally used to offset outdoor air load, zone transmission loads, and (in the cooling season) latent zone loads. Mild winter climates normally permit the use of a low-cost, two-pipe water system. Four-pipe systems may be used in cold climates.

CONDUIT INDUCTION SYSTEM

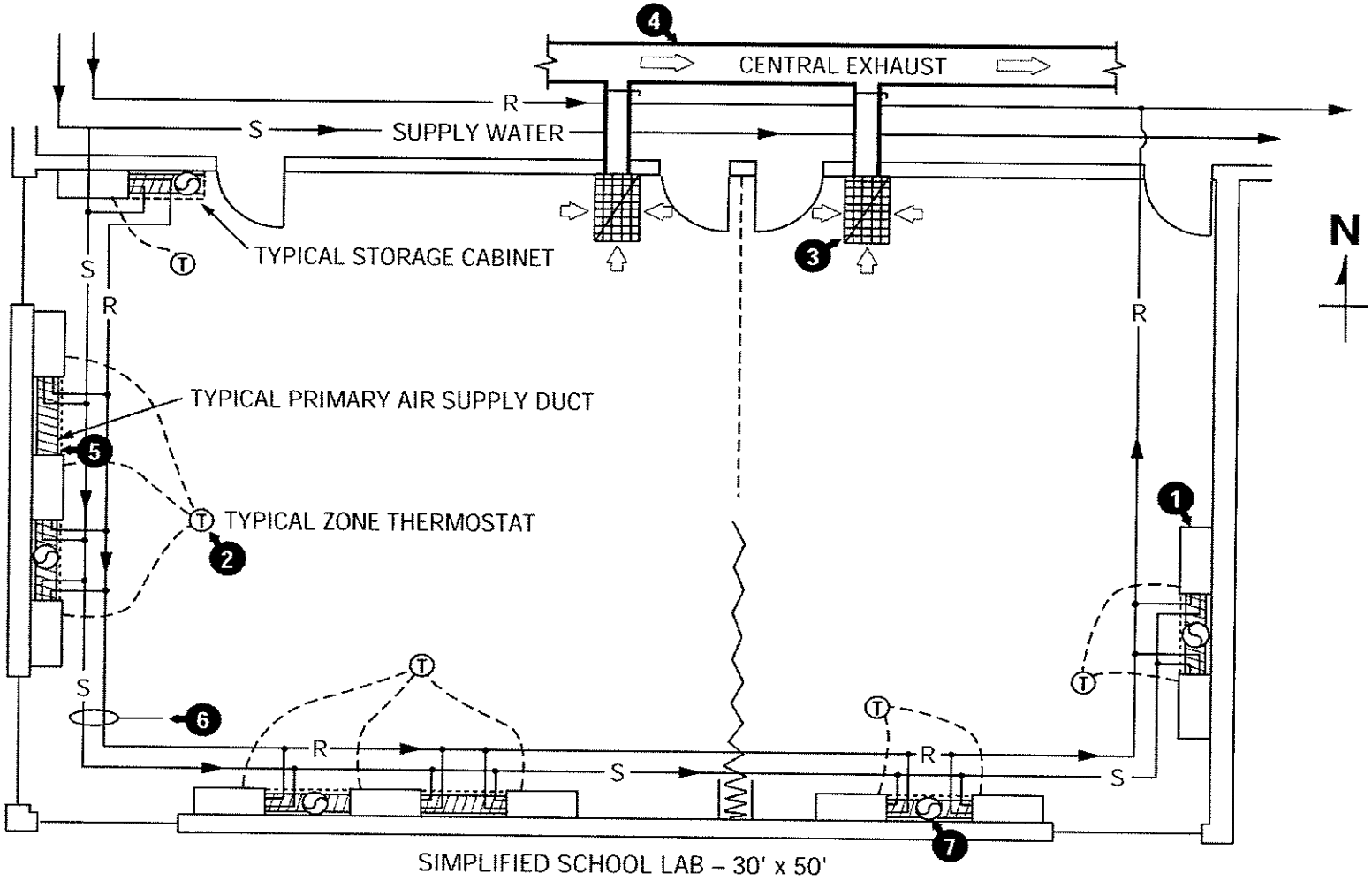

SYSTEM COMPONENTS:

1 – INDUCTION TERMINAL
2 – ZONE THERMOSTAT
3 – EXHAUST GRILLE
4 – EXHAUST DUCT
5 – SUPPLY RUNOUT DUCT
6 – WATER PIPING
7 – SUPPLY DUCT RISER

CONDUIT INDUCTION SYSTEM

ADVANTAGES

- No separate systems required to heat or ventilate zones when boiler is used
- Excellent for both interior and perimeter zones
- Exhaust system may eliminate need for return air system
- No power wiring required to terminals—lower electrical system cost
- Excellent, consistent, well-filtered ventilation
- Good latent cooling capacity even at partial load
- Minimal space consumption for mechanicals
- Versatile terminal style and location
- Under-window heating with floor-mounted units
- Quiet system—no fan or compressor at zone
- No fan or filter maintenance in occupied zone
- Electronic controls available

DISADVANTAGES

- Moderate to high installed cost—when comparing, must be sure to include ventilation system cost as well as electrical distribution cost to terminals for other systems
- Requires duct space about equal to dedicated ventilation system
- In mid-rise or high-rise applications, outside wall-mounted units require supply duct up outside wall chase
- No standby cooling capacity when central equipment fails
- No good for upgrading or expanding existing systems

UNIT VENTILATOR

VARIATIONS ON THE THEME

		Mechanical Refrigeration	Heating	Air Handlers	Terminals
One or Two Stories	Perimeter	**D-X style** – Condensing unit on roof or ground. D-X evaporator in unit ventilator. **Chilled-water style** – Central water chiller(s).	**D-X style** – Electric resistance heater in unit ventilator. **Chilled-water style** – 1. Electric resistance heater. 2. Chilled-water coil used for heat with two-pipe changeover system. 3. Hot-water coil with four-pipe system.	Unit ventilator is the air handler for its zone. Fan, filter, chilled-water or D-X cooling coil, heating coil, and outdoor air intake with damper in factory cabinet. Up to 100% outdoor air. Free discharge or ducted.	Each unit ventilator controls the zone it conditions. D-X or chilled-water units in factory cabinet for in-room vertical or surface-mount horizontal application. Above-ceiling (ducted) also available.
	Core	Unit ventilators most commonly used for building perimeter, not for the core. Most often used in school classrooms.	Unit ventilators most commonly used for building perimeter, not for the core. Most often used in school classrooms.	Unit ventilators most commonly used for building perimeter, not for the core. Most often used in school classrooms.	Unit ventilators most commonly used for building perimeter, not for the core. Most often used in school classrooms.
Three or More Stories	Perimeter	Chilled-water style most often used above two stories. Central water chiller is the mechanical refrigeration system.	**D-X style** – Electric resistance heater in unit ventilator. **Chilled-water style** – 1. Electric resistance heater. 2. Chilled-water coil used for heat with two-pipe changeover system. 3. Hot-water coil with four-pipe system.	Unit ventilator is the air handler for its zone. Fan, filter, chilled-water or D-X cooling coil, heating coil, and outdoor air intake with damper in factory cabinet. Up to 100% outdoor air. Free discharge or ducted.	Each unit ventilator controls the zone it conditions. D-X or chilled-water units in factory cabinet for in-room vertical or surface-mount horizontal application. Above-ceiling (ducted) also available.
	Core	Unit ventilators most commonly used for building perimeter, not for the core. Most often used in school classrooms.	Unit ventilators most commonly used for building perimeter, not for the core. Most often used in school classrooms.	Unit ventilators most commonly used for building perimeter, not for the core. Most often used in school classrooms.	Unit ventilators most commonly used for building perimeter, not for the core. Most often used in school classrooms.

CHILLED-WATER ROOM FAN COIL

VARIATIONS ON THE THEME

		Mechanical Refrigeration	Heating	Air Handlers	Terminals
One or Two Stories	Perimeter	Mechanical refrigeration provided by central chiller(s), which supplies chilled water to a fan coil in each zone.	1. Central boiler supplies hot water to coil in each fan coil. Two-pipe uses common cooling/heating coil. Four-pipe has separate heat/cool coils. 2. Electric heater in each fan coil. 3. Separate baseboard heat system; electric, hot water, or steam, zoned as desired.	**Northern –** 1. Vertical fan coil at outside wall. 2. Stack unit in room interior. 3. Horizontal, free discharge over drop ceiling. **Southern –** In reverse order from above. Only outside wall units ventilate.	The fan coil is the zone terminal. 1. **Two-pipe with electric heat –** Vertical (outside wall), horizontal (above drop ceiling), or stack unit. 2. **Four-pipe –** Vertical (outside wall), horizontal (above drop ceiling), or stack unit. 3. **Ducted for larger zone –** Two-pipe with electric heat or four-pipe.
	Core	Mechanical refrigeration provided by central chiller(s), which supplies chilled water to a fan coil in each zone.	1. Electric heater in each fan coil for morning warmup and unoccupied heating cycles. 2. Four-pipe fan coil receives hot water from boiler (cold climates, roof overhead).	1. Horizontal, above-ceiling units ducted to one or more rooms. 2. Vertical (closet) units with ductwork above ceiling. Ventilation air must be ducted to each fan coil.	1. Two-pipe with electric heat, horizontal ducted above ceiling. 2. Two-pipe with electric heat, vertical (in closet, etc.), with ductwork above ceiling. 3. Two-pipe with electric heat, floor-mount unit at inside wall.
Three or More Stories	Perimeter	Mechanical refrigeration provided by central chiller(s), which supplies chilled water to a fan coil in each zone.	1. Central boiler supplies hot water to coil in each fan coil. Two-pipe uses common cooling/heating coil. Four-pipe has separate heat/cool coils. 2. Electric heater in each fan coil. 3. Separate baseboard heat system: electric, hot water, or steam, zoned as desired.	**Northern –** 1. Vertical fan coil at outside wall. 2. Stack unit in room interior. 3. Horizontal, free discharge over drop ceiling. **Southern –** In reverse order from above. Only outside wall units ventilate.	The fan coil is the zone terminal. 1. **Two-pipe with electric heat –** Vertical (outside wall), horizontal (above drop ceiling), or stack unit. 2. **Four-pipe –** Vertical (outside wall), horizontal (above drop ceiling), or stack unit. 3. **Ducted for larger zone –** Two-pipe with electric heat or four-pipe.
	Core	Mechanical refrigeration provided by central chiller(s), which supplies chilled water to a fan coil in each zone.	1. Electric heater in each fan coil for morning warmup and unoccupied heating cycles. 2. Four-pipe fan coil receives hot water from boiler (cold climates, roof overhead).	1. Horizontal, above-ceiling units ducted to one or more rooms. 2. Vertical (closet) units with ductwork above ceiling. Ventilation air must be ducted to each fan coil.	1. Two-pipe with electric heat, horizontal ducted above ceiling. 2. Two-pipe with electric heat, vertical (in closet, etc.), with ductwork above ceiling. 3. Two-pipe with electric heat, floor-mount unit at inside wall.

CONDUIT INDUCTION SYSTEM

VARIATIONS ON THE THEME

		Mechanical Refrigeration	Heating	Air Handlers	Terminals
One or Two Stories	Perimeter	Mechanical refrigeration provided by central chiller(s), which supplies chilled water to an induction terminal in each zone. Reciprocating or scroll chiller likely in one- or two-story applications.	**Two-pipe changeover** – Common heating/cooling coil at each induction terminal. With chilled water in piping loop, heating provided by primary air. With hot water in loop, heating provided by water coil in terminal. **Two-pipe non-changeover** – Chilled water in piping loop year-round. Heating provided by primary air (plus supplementary zone heat in strategic areas, if needed). **Four-pipe** – Separate heat/cool coils in each induction terminal. Heating provided by water coil in terminal plus primary air as outdoor air temperature drops.	Central station air handler, with chilled-water and hot-water (or steam) coils, delivers 100% outdoor air, high-velocity airstream to terminals for the sake of air motion, ventilation, and heating/cooling capacity. May provide latent cooling capacity for zones to limit RH. High-pressure round ducts deliver about 20 to 150 CFM of primary air to each induction unit, via 3" or 4" flexible branch runout ducts. Perimeter terminals may feed air through first unit to second unit, in series fashion. Ductwork runs in chase, over ceiling, or up outside wall enclosure.	One induction terminal per zone. Terminal has water coil and sound-attenuating supply air plenum with balancing damper and controls. No fan at terminal. Primary air induces room air over water coil. Two-pipe vertical or horizontal in warm or moderate climates. Four-pipe vertical or horizontal in cold climates.
	Core	Same central chiller(s) provides central mechanical refrigeration for the core as for the perimeter zones of the building. Chiller feeds an induction terminal in each zone.			One induction terminal per zone. Terminal has water coil and sound-attenuating supply air plenum with balancing damper. No fan at terminal. Primary air induces room air over water coil. Two- and four-pipe units. Horizontal for ceiling surface-mount or in-soffit application. Vertical for wall-mount installation.
Three or More Stories	Perimeter	Mechanical refrigeration provided by central chiller(s), which supplies chilled water to an induction terminal in each zone. Centrifugal or screw chiller(s) likely in three-story or higher applications.	Same as for the one- or two-story building. Perimeter and top floor (roof overhead) zones in cold climates require two-pipe changeover or four-pipe for efficient heating/cooling.	Same as for the one- or two-story building, except that multiple air handlers are more likely. Perimeter ducting typically runs up the interior of the outside wall, as multiple risers, enclosed in an appropriate chase. Typically no return system required (exhaust removes air). Heating/cooling economy of operation is enhanced when areas with similar load profiles are fed by the same air handler.	Same options as for one- or two-story buildings. As the building height and size grows, the likelihood of a custom-made, field-fabricated enclosure increases for wall-mount units.
	Core	Same central chiller(s) provides central mechanical refrigeration for the core as for the perimeter zones of the building. Chiller feeds an induction terminal in each zone.	Same options as for the one- or two-story building. The core zones seldom require zone heating when occupied and lighted, with the exception of the top floor in cold climates. See air handler notes at right.		

MANUFACTURING OFFICE

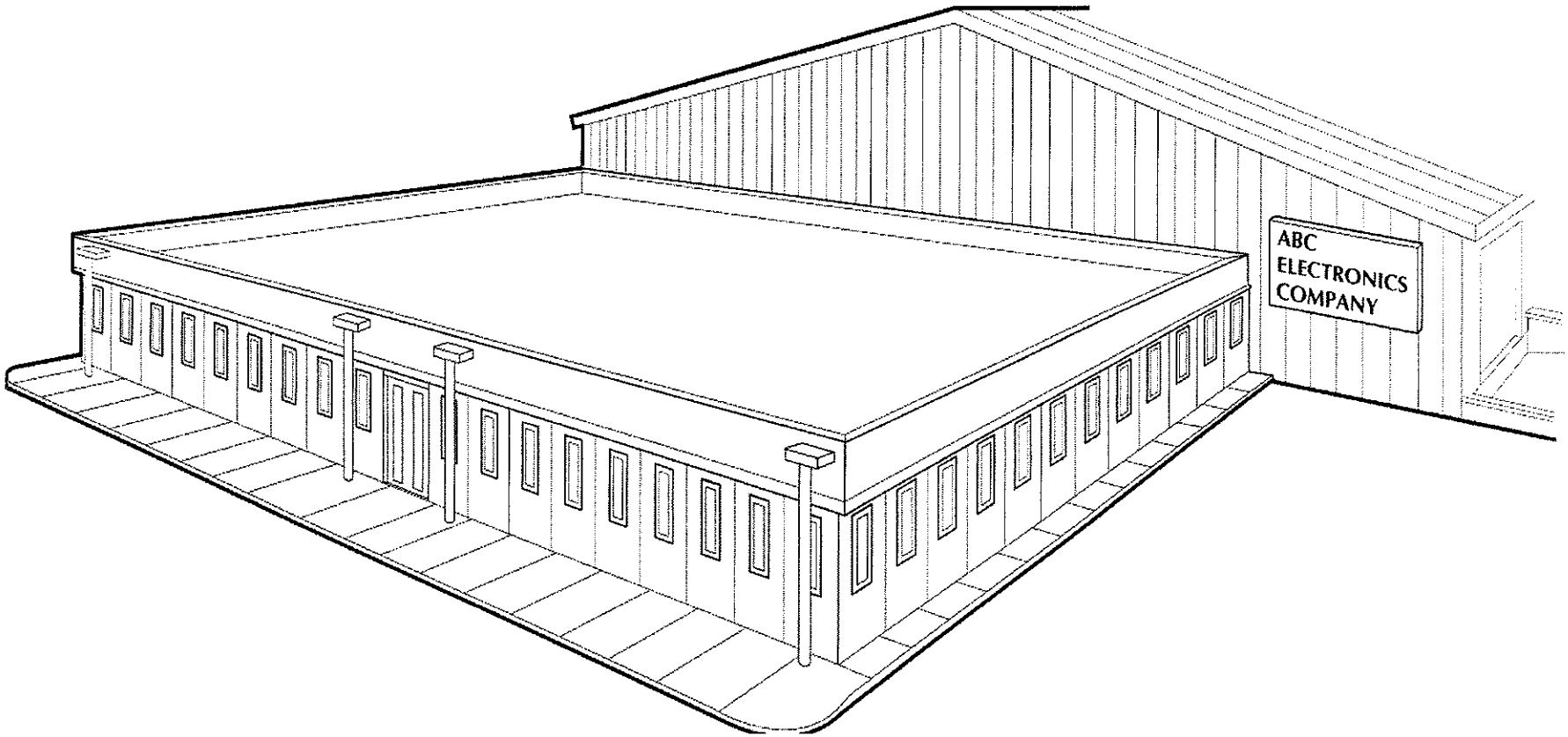

MANUFACTURING OFFICE

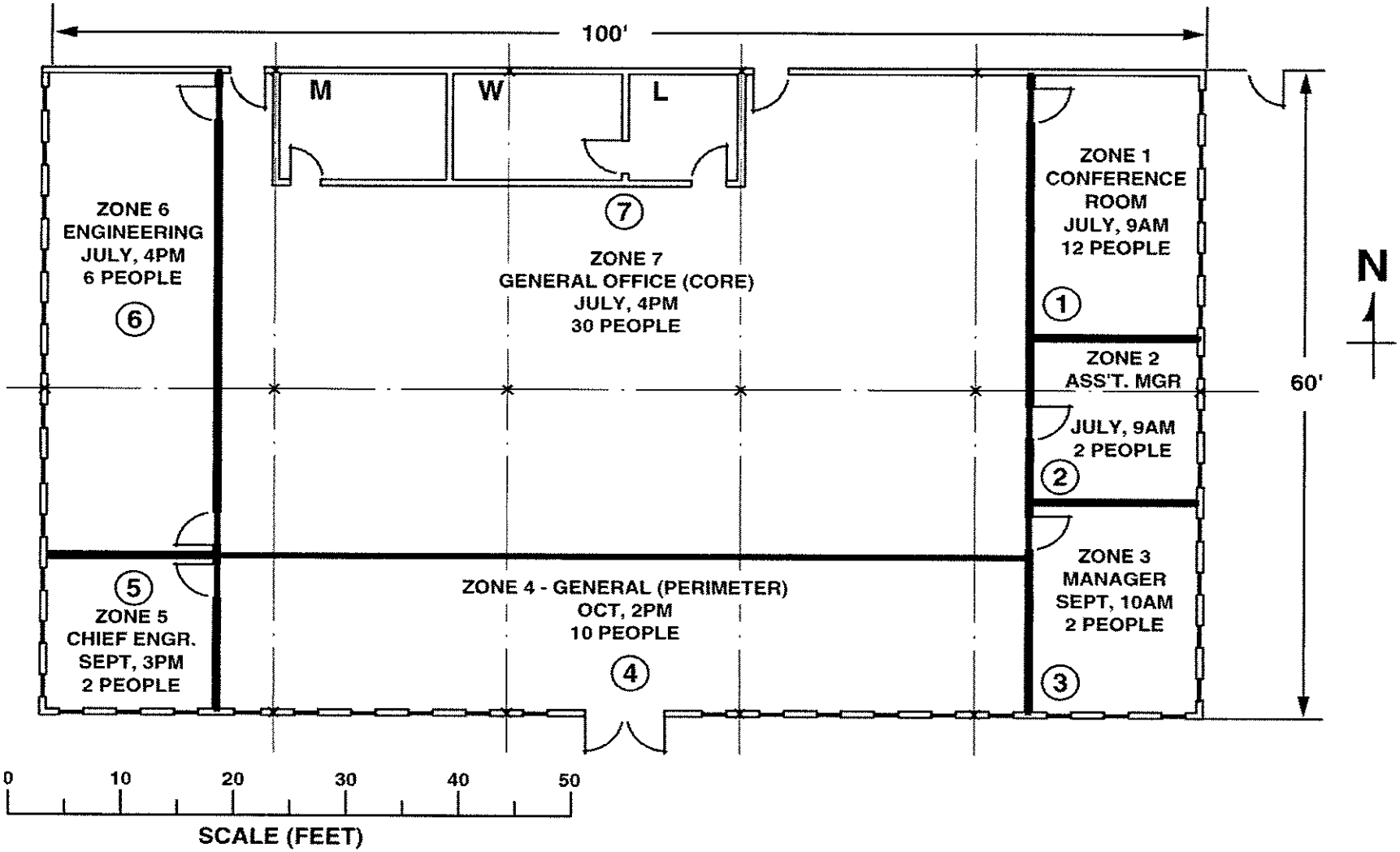

MANUFACTURING OFFICE

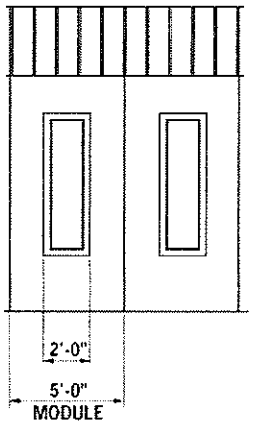

ELEVATION

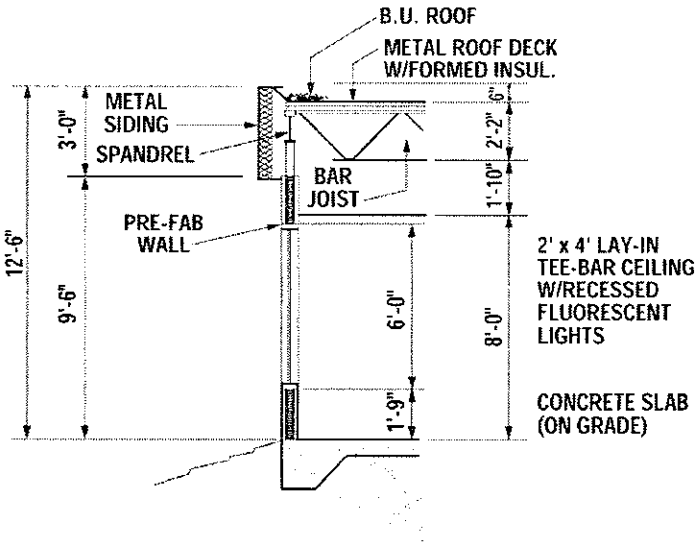

WALL SECTION (TYP.)

THIS IS AN EXAMPLE OF THE TYPE OF PRE-FAB BUILDING THAT GOES UP QUICKLY ALL OVER THE U.S. AND OFTEN ENDS UP WITH A LESS-THAN-ADEQUATE HVAC SYSTEM DUE TO THE RUSH IN THE CONSTRUCTION PROCESS.

BUILDING DATA

Overall Dimensions:
100 ft. x 60 ft. x 12 ft. high

Ceiling Height:
9' 0"

Weight:
Medium-weight walls and building; light roof

Color:
Medium walls (green) and roof

Usage:
12 hours of operation

Design Temperatures:
75° F
70° F (winter)
55° F warehouse (winter)

Electricity:
230V-3Ø-60 Hz

Gas:
Natural gas available

Lights:
2.0 watts/sq. ft. recessed fluorescent

Other Electrical:
0.5 watts/sq. ft.

Glass:
Double-glazed, medium drapes

U Values:

Walls	0.08
Roof	0.08
Entry	1.0 (plate glass)
Partition	0.15 (warehouse)

Occupancy:
64 people

Outdoor Air Ventilation:
20 CFM/person

Infiltration:
0.03 CFM/sq. ft. (heating)

LOAD SUMMARY
MANUFACTURING OFFICE

BLOCK COOLING LOAD

Location: Newark, New Jersey
Latitude: 41 North
Elevation: 11 Feet
Outdoor: 93/74 F D.R. = 20 F
Indoor: 75 F/50% RH

BLOCK HEATING LOAD

Outdoor: 10 F
Indoor: 70 F

AIR SYSTEM DATA

Supply Outlet Temperature (t_o)
- Summer = 58.5 F
- Winter = 110 F

$t_{Entering\ Cooling\ Coil}$ = 81.5/66 F
GTH = 193,270 Btuh
TSH = 161,286 Btuh
TLH = 31,984 Btuh
Approximate Required CFM = 5,600

ZONE COOLING LOAD SUMMARY

Zone	Peak Time	t_{oa} (db/wb)	Number of People	Zone Peak RSH	People Latent Load	Ventilation	
						CFM	GTH
1	July, 9am	82/71	12	12,360	2,460	240	7,236
2	July, 9am	82/71	2	5,760	410	40	1,206
3	Sep., 10am	79/68	2	9,240	410	40	756
4	Oct., 2pm	78/66	10	26,520	2,050	200	2,340
5	Sep., 3pm	89/71	2	8,280	410	40	1,188
6	July, 4pm	93/74	6	19,680	1,230	120	5,076
7	July, 4pm	93/74	30	37,080	6,150	600	25,380
*Block	July, 4pm	93/74	64	101,195	13,120	1,280	53,197

*** Data for an Air System**

humidity moisture = Latent load.

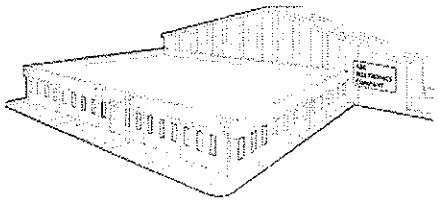

MANUFACTURING OFFICE
CHILLED-WATER FAN COILS

STRENGTHS

- Excellent part-load compressor efficiency
- Smooth compressor capacity modulation
- Flexible control zone size
- Heating built into each terminal
- No mixing of heating/cooling capacity at zone during partial cooling load or occupied heating load
- Minimal building space for mechanical HVAC systems
- Long life expectancy
- Installed tonnage shows diversity at chiller
- Constant room air motion
- Water-side economizer available with additional components

WEAKNESSES

- Moderate to high installed cost
- Latent cooling capacity deteriorates at partial cooling load
- Ventilation highly subject to wind velocity, direction, building pressurization, and neighboring objects
- Poor air filtration/IAQ
- Rentable space lost to cabinet fan coils around perimeter
- Poor interior aesthetics—fan coil cabinet in view by occupants of perimeter spaces
- Visual and mechanical integrity of exterior wall broken by ventilation grilles
- Many points of service
- Many points of electrical power connection
- Coordination of water piping with general contractor required
- Coordination of outdoor air wall sleeve with general contractor required

CHILLED-WATER FAN COIL SYSTEM WATER PIPING

TWO-PIPE, REVERSE-RETURN

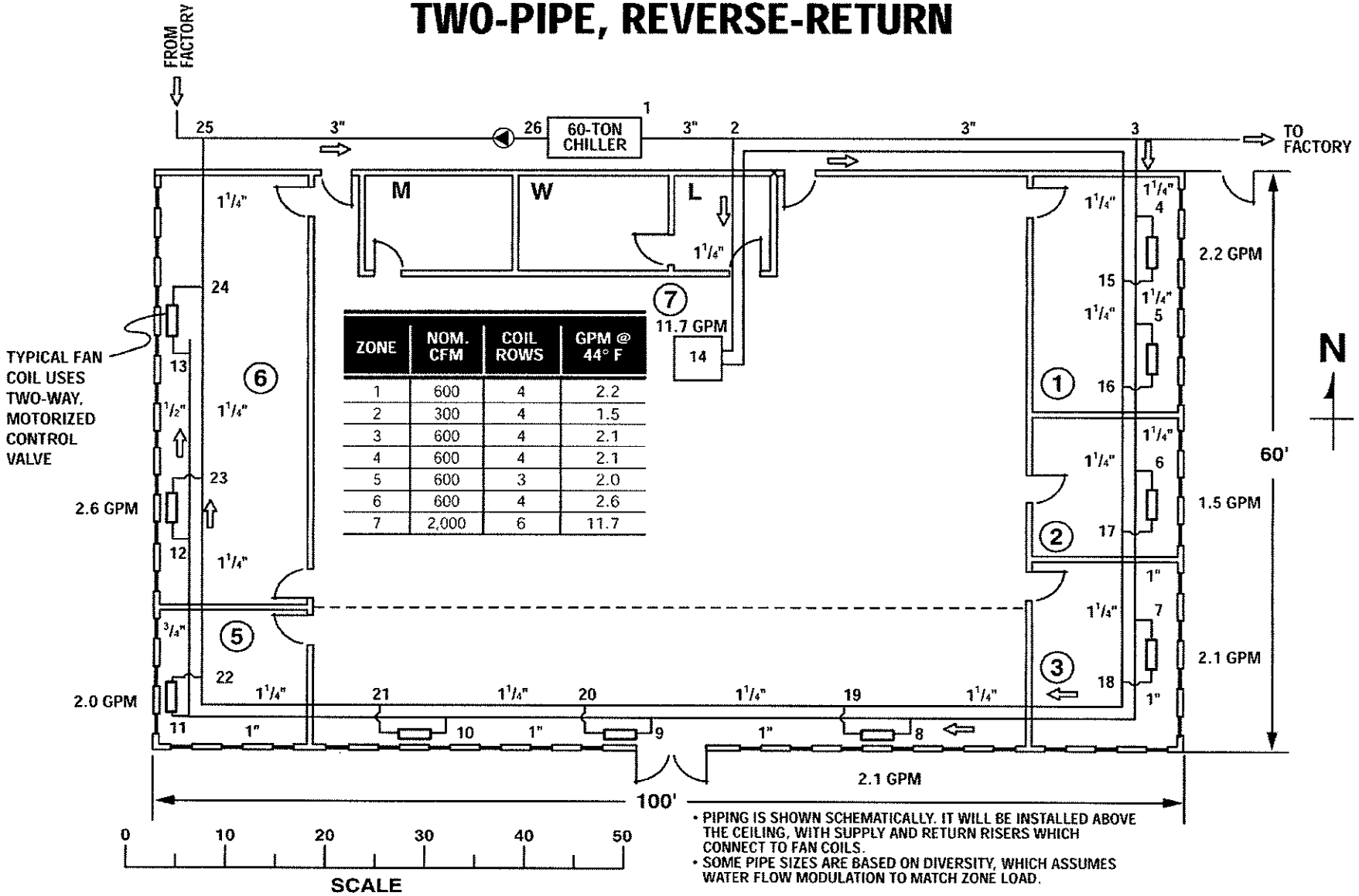

ZONE	NOM. CFM	COIL ROWS	GPM @ 44° F
1	600	4	2.2
2	300	4	1.5
3	600	4	2.1
4	600	4	2.1
5	600	3	2.0
6	600	4	2.6
7	2,000	6	11.7

- PIPING IS SHOWN SCHEMATICALLY. IT WILL BE INSTALLED ABOVE THE CEILING, WITH SUPPLY AND RETURN RISERS WHICH CONNECT TO FAN COILS.
- SOME PIPE SIZES ARE BASED ON DIVERSITY, WHICH ASSUMES WATER FLOW MODULATION TO MATCH ZONE LOAD.

1,2,3,4-Pipe Distribution Systems

Water Distribution Systems

Water distribution systems are very important to the proper operation of chilled water and hot water systems. Therefore, whether a system is used for heating, cooling or both, the basic concepts of water distribution systems must be understood to design a good system.

One way to classify water distribution system is by the number of pipes used to distribute supply and return water throughout the building. The four basic categories are:

1. The 1-Pipe System
2. The 2-Pipe System
3. The 3-Pipe System
4. The 4-Pipe System

All of these systems can be used for heating and/or cooling. However, due to practical issues which will be presented shortly, the 1-pipe system tends to be used for heating only. At any one moment in time, the 1-pipe and 2-pipe distribution systems can distribute either hot or chilled water, but not both simultaneously. The 3-pipe and 4-pipe system, on the other hand, have the ability to distribute both hot and cold water at the same time, so that either is available to the units located in the temperature control zones of the building.

1,2,3,4-Pipe Distribution Systems

- The 1-Pipe System
- The 2-Pipe System
- The 3-Pipe System
- The 4-Pipe System

1-Pipe Water Distribution Systems

1-Pipe Water Distribution Systems

A 1-Pipe water distribution system is a system which has a one-pipe main leaving the boiler, looping around the building and returning to the boiler. This pipe is both the supply and return main. Its size is constant throughout, and all of the water in the system flows through it.

Several branch circuits are fed from the main. The branch circuit begins as the riser branches off the main and flows into the runout, which feeds one or more zone heating terminals, here pictured as a single rectangular heating coil at each zone. A small amount of water is induced to leave the main at each riser by the use of a special flow fitting, sometimes called a "monoflow" fitting. These fittings create a pressure drop in the main equal to or greater than the pressure drop through the riser, runout, zone terminal unit and return piping. Therefore, some water leaves the main on the high pressure side of the flow fitting, flows to the terminal unit and returns to the main on the low pressure side of the flow fitting.

The water returning to the main is at a different temperature than the water leaving the main. The mixing of these two different temperature water streams changes the temperature of the total water flowing in the main. However, the amount of this change is usually small since the quantity of water flowing to and from the unit is small compared to the total quantity of water in the main. Even so, it may be necessary in some cases to select the terminal units toward the end of the supply main for a water temperature different than that for the terminal units near the beginning of the main because of this temperature change.

The zone terminal units connected to this system are characterized by having large water passages in the coil so that the waterside pressure drop through them is low. This is necessary because the pressure drops created by the flow fittings in the main are small. Furthermore, the pressure loss across the flow fittings must be kept small because they are cumulative (they are in series, from a flow perspective) and each drop adds to the head against which the system pump must work. Maximum pressure loss through the zone terminal unit and runout is fixed once a specific flow fitting is installed, and the only way this pressure loss can be changed is by changing the resistance of the flow fitting or the flow of water in the main. Water flow in the branch circuit can be controlled by increasing or decreasing the size of the piping from the flow fitting to the terminal unit and back to the main and/or by selecting a zone terminal unit with a different waterside pressure drop. More pressure drop will mean less water flow. If great care is not taken in the selection of these fittings, considering their resulting pressure drop, the pump head may become excessive for this type of system.

Control of water flow to the zone terminal units in a 1-Pipe system may be difficult to achieve. The pressure drop from the point where water leaves the main to where it returns is small and small changes in resistance in this line result in large changes in water flow. As a result, many 1-Pipe systems avoid water flow control at the zone terminals and achieve capacity control by regulating air flow over the zone terminals instead.

1-Pipe

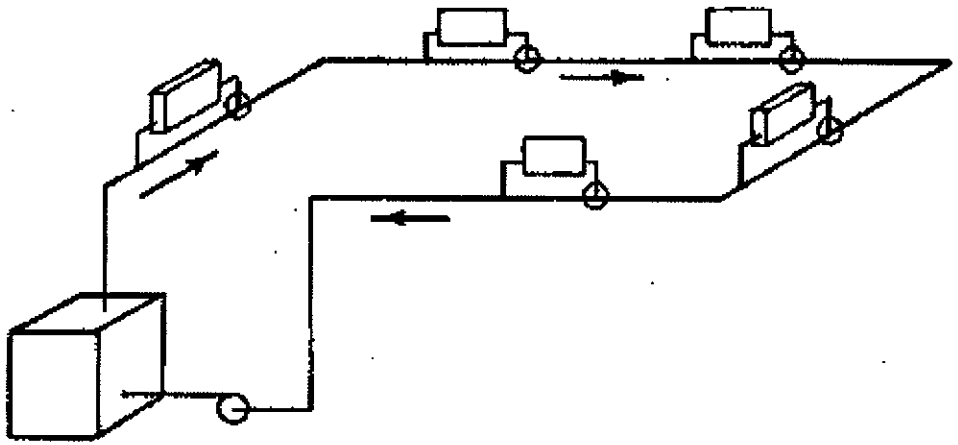

1-Pipe Pros & Cons

1-Pipe Benefits and Disadvantages

The 1-Pipe system has been used for many years in residential and small commercial buildings. It has been used primarily as a hot water distribution system and seldom for the distribution of chilled water.

Some advantages of the 1-Pipe system are:

1. Design of the piping system is simple; one pipe, one size throughout.
2. Installation is simple.
3. The installed cost is low.
4. It has some flexibility because it can be broken down into several loops, the loops being connected in parallel so that the pumping head can be kept reasonably low.

Some disadvantages of the 1-Pipe system are:

1. The pumping head is generally higher than that in other systems because of the resistances occurring in series.
2. The change in water temperature as the water moves through the system creates the possible need of larger units at the end of the main, which will complicate the selection of the zone terminal units and add cost due to oversized units near the end.
3. The amount of water that is forced from the main through the runout is limited because of the design of the flow fittings and the pressure drop that can be created. The amount of water is generally not sufficient for large air handling unit coils. This tends to limit its use to terminal units located in zones made up of a part of a room, a single room, or just a few small rooms, closely spaced.
4. In order to keep the pressure loss through the unit coils low, the water velocity through the coils must be kept low. This results in coils with large tube diameter, a greater number of tubes in parallel, or larger coils than used with other distribution systems. Therefore, a physical space and terminal cost penalty must be paid when a 1-Pipe system is used.
5. The 1-Pipe system is poorly suited to chilled water distribution for several reasons:
   - The water quantity used in chilled water systems is usually considerably higher than that used for heating because the zone unit coils work on smaller temperature differentials in the cooling than in the heating mode.
   - In order to economically accommodate higher water flow, zone terminals used for chilled water need higher pressure drops so that the size will not become prohibitively large, expensive or space-consuming. Additionally, it is necessary to keep the velocity in these compact coils up so that there is efficient heat transfer in the coil. They do not work well at the low velocities used for the zone terminals of 1-Pipe systems.
   - The 1-Pipe flow fittings, as presently designed, do not have enough pressure drop to force the water through the riser and runouts to the zone terminals and back to the main. This means that, in order to be practical for chilled water, new fittings would have to be designed to create higher pressure differentials.
   - If this were done, the greater resistance in the line would create extremely high pumping head if the chilled water 1-Pipe distribution system was extensive.

1-Pipe Pros & Cons

Advantages

- Easy to design
- Easy to install
- Low installed cost
- Flexibility with loops in parallel

Disadvantages

- Pump head high - loops in series
- Inconsistent & deteriorating supply water temperature
- Distant terminals must be oversized
- Terminal flow limited by flow fitting loss
- Terminal velocity must be low for low pressure drop - upsize terminals

1-Pipe as Part of a Hybrid System

1-Pipe Used as Part of a Hybrid Distribution System

Despite its limitations for cooling and for large buildings, there are places where the 1-Pipe distribution system or, more accurately, parts of the 1-Pipe distribution system can be used in conjunction with other types of water distribution systems in these applications. Shown below, on the left, is a system that could be used in a building of several stories. This system has one riser and one return for every other bay. The mains and risers are designed as a 2-Pipe system. Each runout off the riser feeds two zone terminal units in that bay using a 1-Pipe distribution system, continuing across the bay to a return main on the opposite side. Only one pipe has to be run parallel to the floor across the bay. This eliminates some of the main riser piping since only one riser and one return is necessary for every two bays of the building, instead of one for each bay.

With a proper understanding of the strengths and weaknesses of the 1-Pipe system, the designer can create numerous combinations like this to take maximum economic advantage of the 1-Pipe system within its practical performance limitations.

Shown below, to the right, is a system for cooling a high-rise building where the number of zone terminal units on each floor is rather small. In this situation, only two risers are needed for the entire tower section; one supply riser and one return riser. Each floor consists of one or more 1-Pipe loop(s) supplying and returning all the zone terminals on that loop. This can be adapted to a system that serves large zones, where there is one supply riser and one return riser for each zone, the supply riser being in one corner and the return riser in the other corner of the zone. Since the total temperature differential of the water is generally smaller on the cooling than on the heating cycle, and the flow of water is greater in cooling, it is not likely that the zone terminal units on the last section of the run will have to be sized larger than the units on the first section of the run because of the change in water temperature.

1-Pipe as Part of a Hybrid System

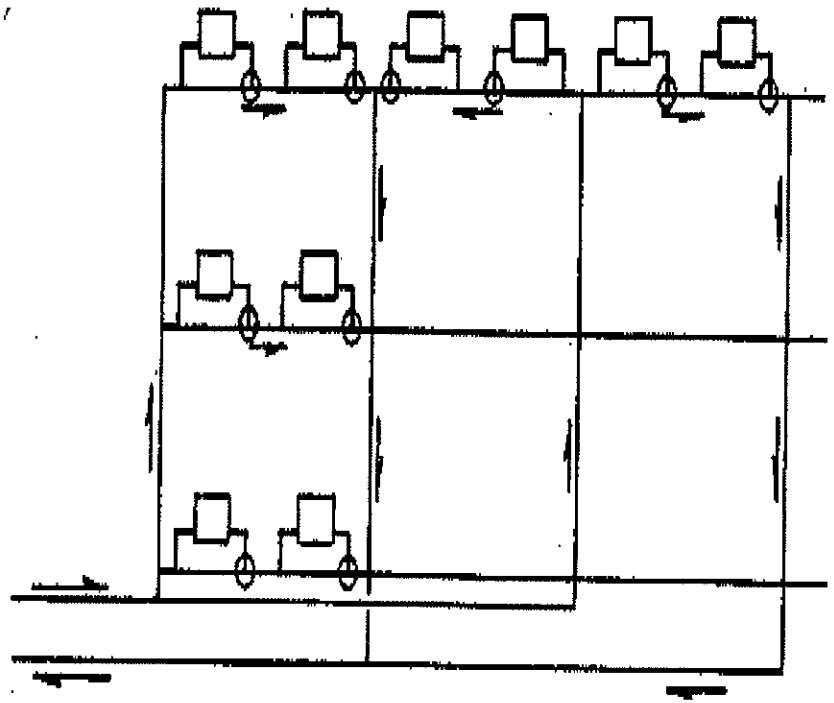

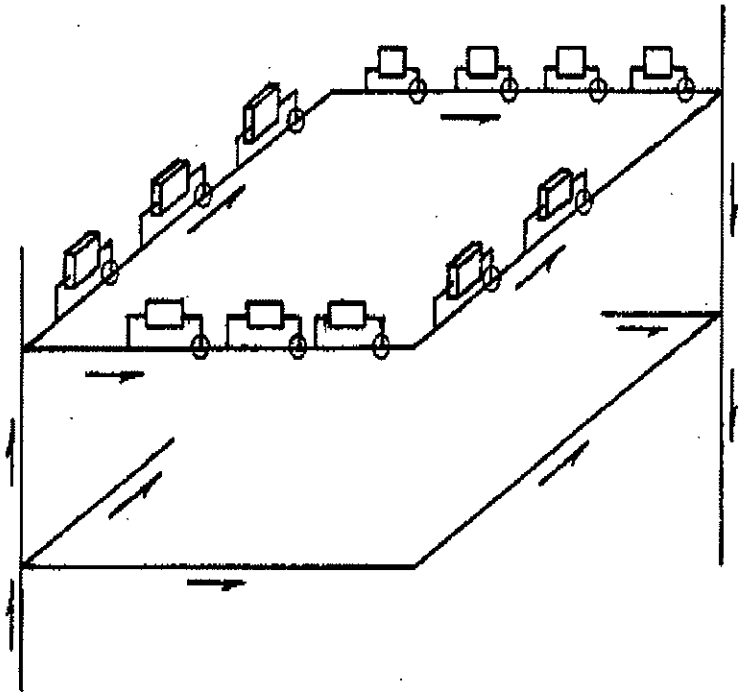

2-Pipe Water Distribution Systems

2-Pipe Water Distribution Systems

The 2-Pipe water distribution system is used with both heating and cooling equipment containing water coils. It is equally useful for fan coil or induction type zone terminal units and medium or large central air handlers using hot water and chilled water coils. The 2-Pipe system can be used to distribute either hot or cold water, or to alternate between the two, on a time sharing basis. When the same piping is used for both heating and cooling, there must be a definite outdoor temperature, called the "changeover temperature", or some other indicator of building load, at which point the hot water in the piping is replaced by the chilled water or vice versa. The changeover takes time and normally is practiced seasonally or occasionally, over some shorter time interval. It is not practiced every day nor is it practiced weekly.

There are two forms of 2-Pipe water distribution system in common use; 2-Pipe direct return and 2-Pipe reverse return. These will be covered later, but the diagrams shown here will be labeled accordingly.

In a 1-Pipe system, the supply and return mains are one and the same pipe. The quantity of water flowing through the main is approximately constant and the main is built of one diameter pipe throughout its length. On the other hand, in the 2-Pipe system, the supply and return mains are separate pipes and water leaving the supply main goes to the return main. As water leaves the supply main and goes through the terminal units, the quantity of water flowing in the main is reduced, so the pipe diameter can be reduced. The opposite occurs in the return main which starts out small in diameter and has to be increased in size as water enters it.

2-Pipe

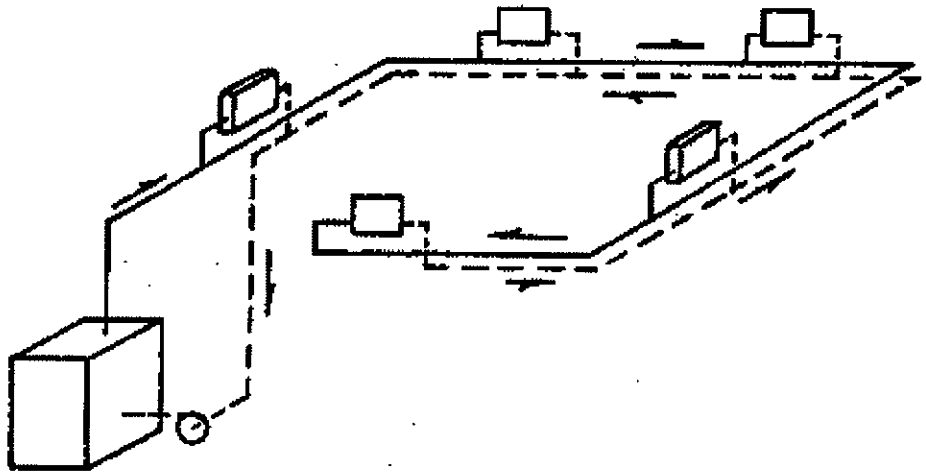

2-Pipe Pros & Cons

2-Pipe Advantages and Disadvantages

Some advantages of the 2-Pipe distribution system are:

1. A higher friction loss can be taken in both the piping and the zone terminal units and still have a total pumping head lower than that in the same size 1-Pipe system because the zone terminals are water circuits in parallel instead of series.
2. It is easier to balance the flow to each unit in this system than in the 1-Pipe system, assuming branch circuit flow balancing valves are installed in the piping as the system is installed.
3. The water temperature entering each zone terminal will be the same because the return water from each terminal unit dumps into the return main and does not mix with the chilled water in the supply main.

Some disadvantages of the 2-Pipe distribution system are:

1. The installed cost is greater than that for a 1-Pipe system. In systems of the same size, even though the average pipe diameter in the 2-Pipe system is smaller than that in the 1-Pipe system, the extra pipe and greater number of fittings means that this system will have a greater first cost.
2. Like the 1-Pipe system, the 2-Pipe system distributes only a common temperature fluid to the zone terminals at a given time. The system can deliver hot water or chilled water to the coils, but only one. The system must be in either the heating or cooling mode. To change over from heating to cooling, the water in the mains must be completely recirculated through the chiller and back to the unit before any cooling is available at the zones.
3. Changeover takes time. It is not practical to plan on changing over frequently. Seasonal changeover is most common.

2-Pipe Pros & Cons

Advantages

- Branch circuit Δps can be higher than 1-Pipe, because they are in parallel, not series
- Total pump head less than 1-Pipe
- Easier to balance then 1-Pipe (with zone balancing valves)
- Same supply water temperature to all terminals

Disadvantages

- Higher installed cost than 1-Pipe
- hot or cold, not both, at one time - does not accommodate simultaneous heat/cool needs
- Changeover takes time

3-Pipe Water Distribution Systems

3-Pipe Water Distribution Systems

The 3-Pipe water distribution system has two supply mains coming to each zone terminal, one for chilled water and one for hot water, and only one return main. This is where the name, "3-Pipe system", originated. The chilled water supply and hot water supply lines are sized according to normal standards and the return is sized to handle the maximum water flow. As with 2-Pipe systems, the return main can be either direct return or reverse return, as described later.

Because of the two supply mains to each zone terminal, there is always hot and cold water present at the entrance to the zone coil ready to be used when needed. This gives any fan coil or air handler supplied by the 3-Pipe water distribution system the ability to heat or cool at any time. No changeover from summer to winter cycle is needed.

To prevent the operating cost of this system from becoming prohibitively high, the mixing of hot and chilled return water must be held to a minimum. To help accomplish this, a new water flow control valve was developed for use at the zone terminals. This control valve is essentially two, 2-way modulating valves in one body using a common exit port. It has three piping connections; one from the hot water supply main and one from the chilled water supply main, the third being a common exit port, connected to the unit coil inlet. This valve is made so that the inlet ports can be open to only one supply main at a time. In operation, the valve will admit from zero to full flow of chilled water, or from zero to full flow of hot water, but it will not admit both hot and cold water at the same time. While allowing the cold or hot water to enter the unit, the section of the valve that is operating acts as a standard 2-way modulating valve.

After entering the zone terminal unit, flowing through it and entering the return main, water mixes with other return water and flows back to the chiller or boiler, as the case may be. There is no zoning of the supply mains necessary because both mains come to each zone unit.

Theoretically, a single return main is sufficient. However, to make this system operate economically, it is necessary to carefully analyze the building in which it is installed and zone the return mains so that the majority of units emptying their water into any one zone main will be working either as heating or cooling units. This keeps the mixing of hot and chilled water in the return main to a minimum. Otherwise, a penalty in operating cost occurs in the system. The zone return main carries the water back to the equipment room where some means is used to divert the cold return water to the chiller and the hot return water to the boiler.

3-Pipe

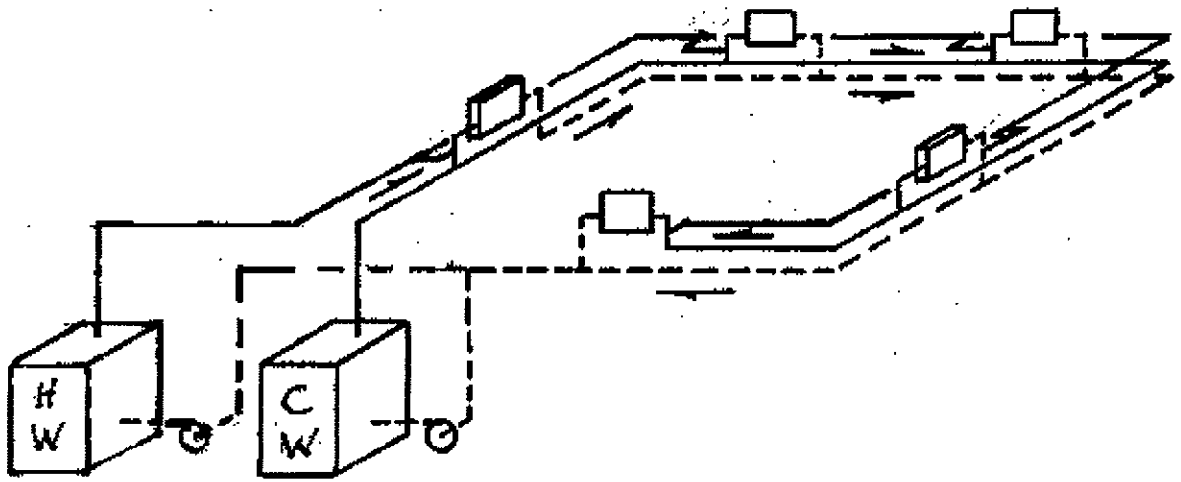

3-Pipe Pros & Cons

3-Pipe Advantages and Disadvantages

Some advantages of the 3-Pipe distribution system are:

1. It offers hot and cold water to all zones simultaneously.
2. Therefore, it can handle simultaneously-occurring heating and cooling loads. This is especially important in cold climates and climates which spend significant time with outdoor air temperatures of about 50°F and below.
3. No system changeover is required to switch from delivering chilled water to hot water, or vice versa.

Some disadvantages of the 3-Pipe distribution system are:

1. It is more complex to design than the 1-Pipe or 2-Pipe systems. In fact, it is also more complex to design than the 4-Pipe system, which will be presented next. The design tends to be time consuming and little information is available to help the engineer.
2. The 3-Pipe zone terminal valves are a proprietary product, which makes it impossible to seek the benefit of free-enterprise, competitive market pricing. This tends to make the control valves more costly than those used on other distribution systems.
3. The initial, installed cost is higher than 2-Pipe because of the extra supply main going to the zone terminals or air handlers, the more expensive control valves, and the added cost of the diverting valves or pumps in or near the equipment room. The increase in installed cost of the 3-Pipe system including the piping, pumps, and zone control valves over the cost of the 2-Pipe system is about 40%.
4. In addition to higher installed cost, the operating expense is also higher than a comparable 2-Pipe system because the mixing of cold and hot water unnecessarily adds load to both the boiler and chiller. Water from units receiving chilled water mixes with that from units receiving hot water, so the chiller receives return water that is warmer than normal and the boiler receives return water that is colder than normal. The total owning and operating expense of the 3-Pipe system is about 15-30% higher than that for a 2-Pipe system, depending upon the control strategy employed.
5. The 3-Pipe system is seldom used. This means that the expertise to properly design, install, troubleshoot and repair 3-Pipe systems is less available than that for 2-Pipe and 4-Pipe systems.

3-Pipe Pros & Cons

Advantages

- Offers hot and cold simultaneously
- Handles simultaneous heating and cooling loads
- No system changeover

Disadvantages

- Most complex design
- 3-Pipe valves proprietary
- higher first cost than 2-Pipe water system (+40%)
- Higher operating expense (+15-30%)
- Seldom practiced by designers

4-Pipe Water Distribution Systems

4-Pipe Water Distribution Systems

The 4-Pipe water distribution system is actually two, 2-Pipe systems in parallel; each system consisting of its own supply and return main. One system is always distributing chilled water to the units and returning it to the chiller for heat removal. The other is distributing hot water to the units and returning the water to the boiler for the addition of heat.

Unlike the 3-Pipe system, there is no mixing of hot and cold water. By using two separate coils in each zone terminal unit, or a single coil with a separate cooling and heating circuit, the heating and cooling systems are completely separated. That is, the chilled water flows through a cooling coil and the hot water flows through a separate heating coil. At no point are the two circuits connected.

When used with a 4-Pipe water distribution system, each terminal unit can become a separate zone of control, with its own thermostat. There is no need of zoning by exposure or for varying internal temperatures caused by compromising zone sizes for the sake of system limitations. Both hot and cold water are available to all units at one time. Also, since the water returns to its respective main as soon as it leaves the unit coil, there is no need to zone the return mains as is done in the 3-Pipe system. This eliminates the need for diverting valves (with diverting pumps) and the special piping techniques used in the 3-Pipe system.

4-Pipe

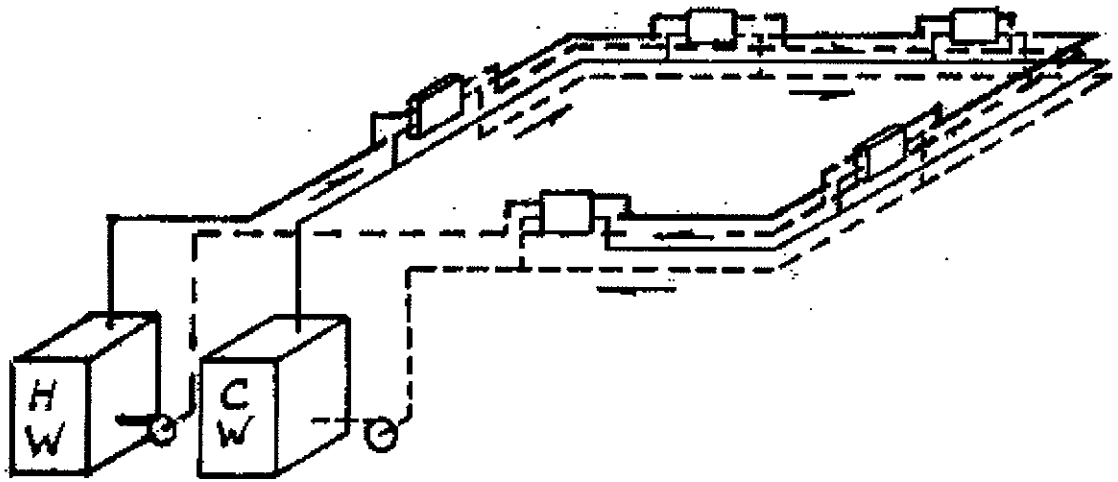

4-Pipe Pros & Cons

4-Pipe Advantages and Disadvantages

Some of the advantages of the 4-Pipe distribution system are:

1. It is easy to design, install and control. Being two, 2-Pipe systems in parallel, it uses standard techniques for 2-Pipe design.
2. The system is much easier to commission, test, adjust and balance than the 3-Pipe system.
3. If offers both hot and chilled water to all zones simultaneously, enabling the system to meet cooling and heating loads whenever and wherever they occur. There is no need for seasonal or more frequent changeover.
4. No zone piping is required, as is required for 1-Pipe and 3-Pipe systems. Mains and branch circuits usually are ample to provide the water distribution necessary to achieve zone control of the building.
5. The hot and chilled water circuits are completely separate and the two water streams are never mixed.
6. The operating cost is less than that for a 3-Pipe system. When fossil fuel-fired boiler operation offers operating cost advantages over electric resistance zone heat, it will also be more economical than 2-Pipe systems used in climates with significant time spent below about 50°F outdoors.
7. The design methods, valves and controls are standard and, therefore, benefit from competitive free-enterprise market pricing.

Some of the disadvantages of the 4-Pipe distribution system are:

1. It has a higher installed price than 2-Pipe and most 3-Pipe systems. However, smaller 3-Pipe systems may be more costly due to the complexity of return zoning and special diverting valves and pumps used to separate chilled water return from hot water return. Usually, however, the extra pipe and valves at the zone terminals tend to make the 4-Pipe system the most costly in terms of installed cost.
2. 4-Pipe systems also require terminal units with a double coil or a 2-circuit coil, which costs more than the single coil terminals used for 1-Pipe, 2-Pipe and 3-Pipe systems.
3. There are 4 pipes to run throughout the building, which takes more time and consumes more space for piping than the other systems.

4-Pipe Pros & Cons

Advantages

- Easy design (two, 2-Pipe systems in parallel
- Easier to commission, test, adjust & balance than 3-Pipe
- Heat/cool available everywhere simultan-eously
- No zone piping
- Separate hot/cold circuits - no mixing
- Lower opcost than 3-Pipe
- Standard valves & controls

Disadvantages

- Higher installed cost than 2-Pipe or 3-Pipe
- Higher cost for zone terminal units than 1,2, or 3-Pipe (2 separate circuits - hot/cold)
- 4 Pipes run throughout the building

DIRECT AND REVERSE RETURN

In addition to once-through (waste water), open-recirculating, and closed-recirculating; and 1-pipe, 2-pipe, 3-pipe, and 4-pipe; water systems are also classified in two other ways:
1- Direct return piping
2- Reverse return piping

The next five pages illustrate common layouts for direct return and reverse return piping systems.

The page below shows a Direct Return System. Water enters Unit1 from the supply header, passes through the unit, and directly returns to the boiler or chiller. The return water flows in the opposite direction to the supply. This layout is most commonly used because when a piping loop is not employed, it requires the least amount of piping for linear layouts. However, it builds in an "unequal" pressure drop for each of the unit circuits. The pressure drop seen by the pump for Unit1 will be less than Unit2, less than Unit3, ... less than Unit5. Balancing valves and a means for measuring flow must be provided to equalize the circuit pressure drops. Otherwise the circuits will equalize their pressure drops automatically by varying the flow rate through each circuit. Unit1 will receive the most flow and Unit5 the least.

A Reverse Return System (next page) is used to minimize the requirement for individual unit balancing and is referred to as a Self-Balancing System.

In this system, the return header flows in the same direction as the supply header and the first unit supplied is the last one returned.

<u>System Piping Layouts:</u>
In an actual building, piping is arranged in either a horizontal manner or in a vertical manner. System1 shows a horizontal loop arrangement. Utilizing a reverse return layout for a loop requires no more piping than does direct return. The return follows the supply around the floor.

When it comes to vertical piping arrangements, two ways to layout reverse return piping are shown. In System2, each coil is served by a three-pipe riser, consisting of a supply header, return header, and reverse return header.

System3 shows a "common" reverse return piping layout. Each coil is served by a supply and return riser. A supply header feeds each riser from the bottom floor. All riser returns are collected in a common return header on the top floor. The common return header is then piped separately down to the bottom floor in one drop pipe to return water to the source.

Piping material and labor costs tend to determine the layout.

DIRECT RETURN

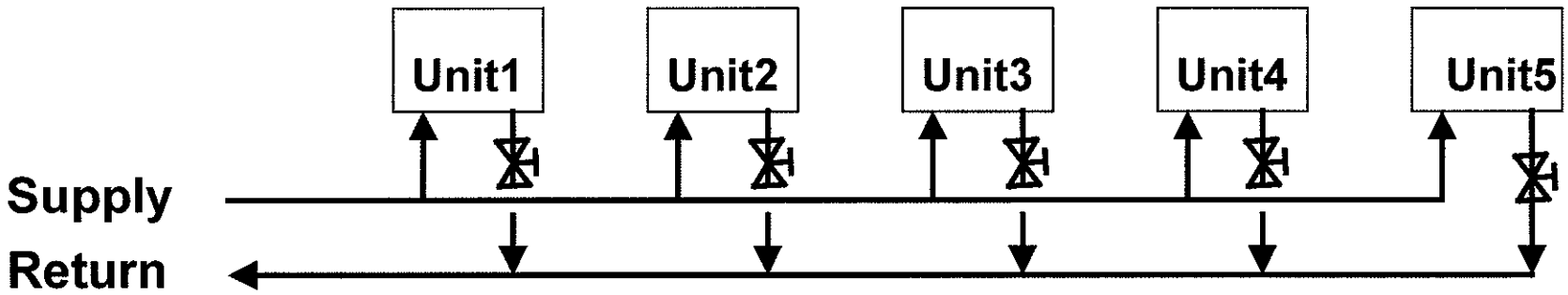

- Water enters Unit1 from supply
- Water leaves Unit1 and directly returns to source
- The first unit supplied is the first returned
- Unequal circuit pressure drops result
- Circuit pressure drop through Unit1 < Unit2 < Unit3 < Unit4 < Unit5.
- Balancing valves must be added

REVERSE RETURN

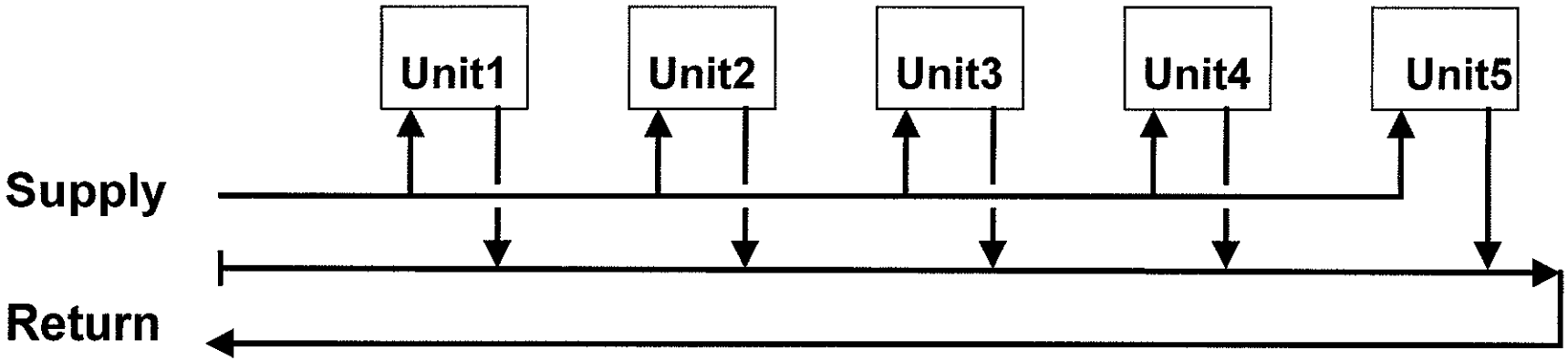

- Return header flow is same direction as supply header flow
- Water leaves Unit1 and goes all the way around in returning to source
- The first unit supplied is the last returned
- Circuit pressure drop through Unit1 = Unit2 = Unit3 = Unit4 = Unit5.
- Balancing valves not required

REVERSE RETURN

- Horizontal layout
- No extra pipe required
- Return follows supply

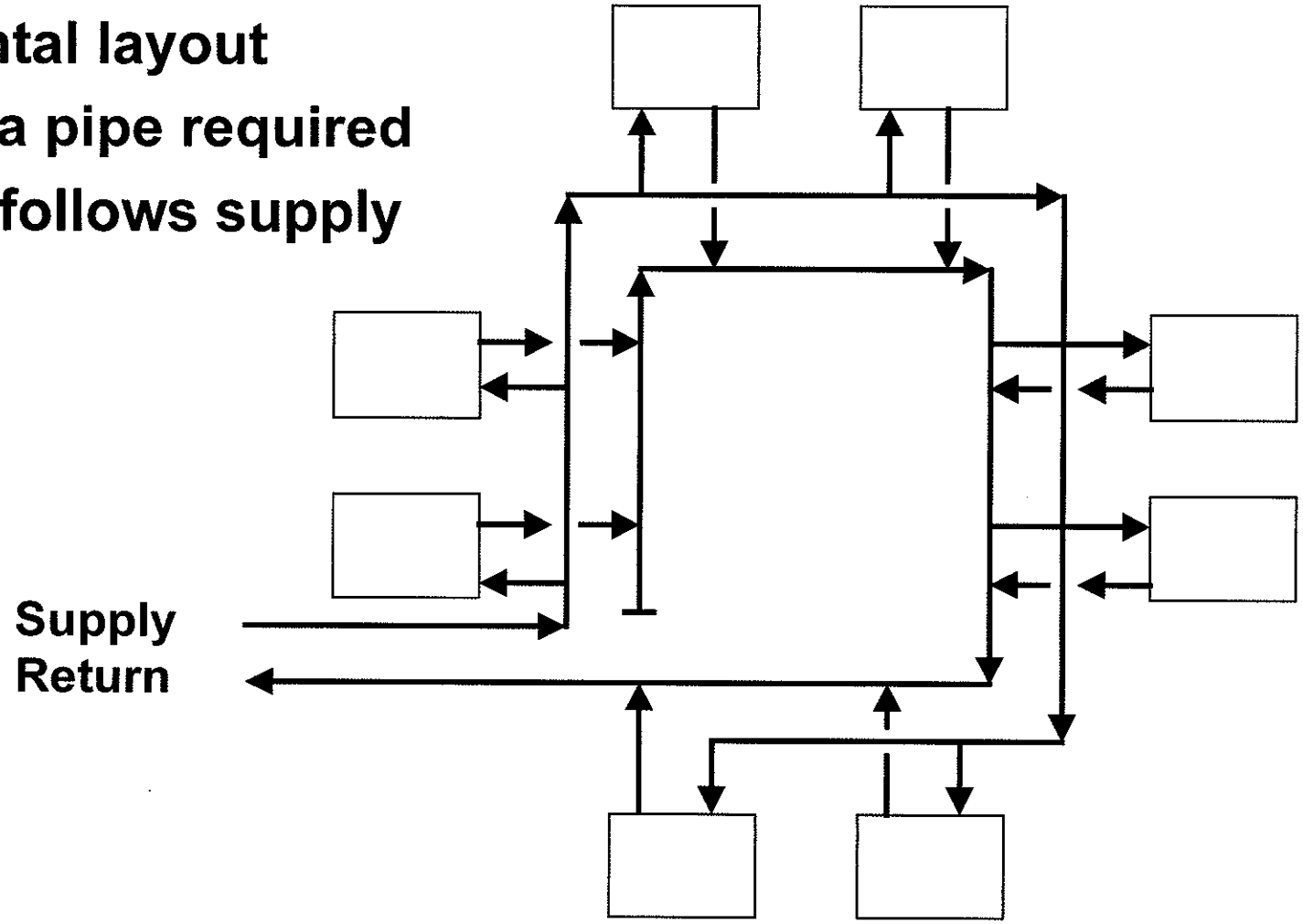

DIRECT OR REVERSE RETURN RISERS

- Direct return at each set of units
- Reverse return at each set of units
- Supply & return headers at bottom

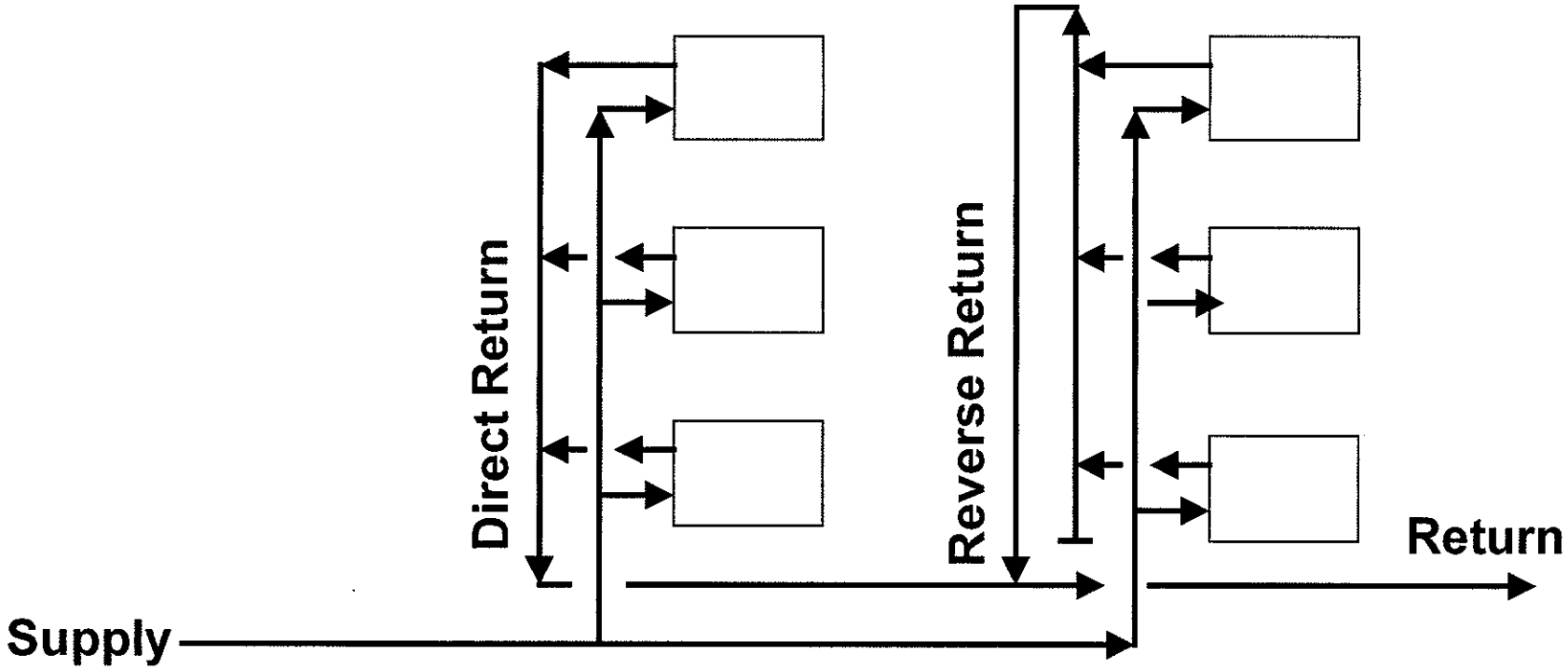

DIRECT OR REVERSE RETURN RISERS

- Reverse return at each set of units
- Supply header at bottom
- Reverse return header at top
- Single vertical return to bottom

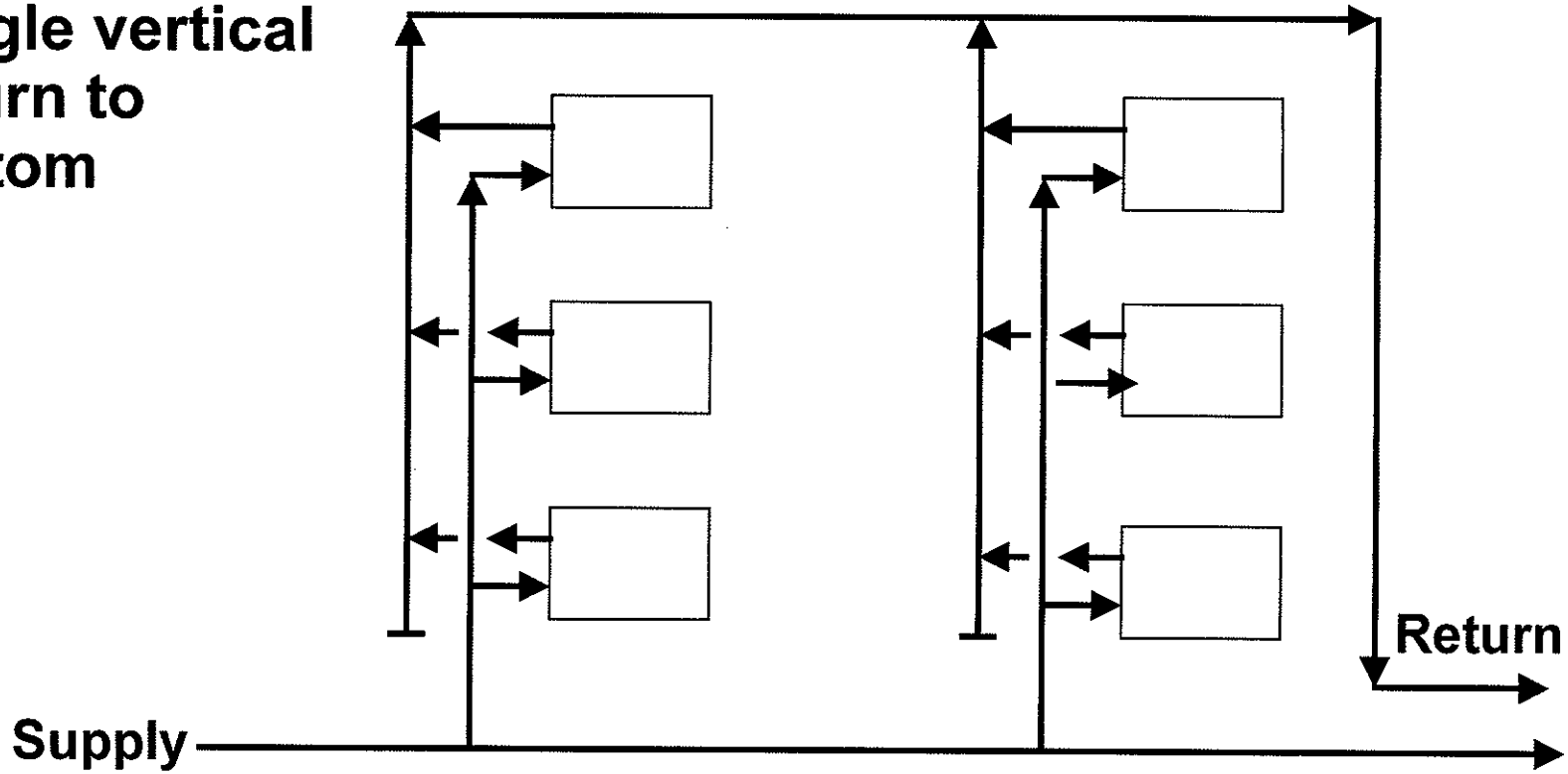

GENERAL DESIGN CONSIDERATIONS

Water Piping Systems should be as direct and uncomplicated as possible. Offsets, bends, and changes in elevation should be kept to a minimum. Any fitting that is omitted represents a reduction in first cost and operating cost.

On the other hand, many components in the piping system require periodic maintenance. Condenser and chiller tubes must be periodically cleaned. Cooling coils, valves, and pumps will eventually require repair and servicing. All these operations must be preceded by draining the water out of the piece of equipment involved. Thus, it is convenient and economical to be able to isolate such pieces of equipment by means of shut off or isolating valves, so that the entire system does not have to be drained and refilled.

It may also be important that any piece of equipment can be isolated and worked on while the remainder of the system continues to operate normally.

In addition to isolation valves, pipe unions or pairs of flanges are required at strategic locations so that the piping can be easily dismantled for possible removal of such things as coils and control valves. Judgement and imagination are needed to balance a system's service requirements against it's first cost.

Let us now examine the various parts of a piping system in detail.

GENERAL DESIGN CONSIDERATIONS

- **Make system as direct & uncomplicated as possible:**
  - Minimize offsets, bends, elevation changes
  - Minimize use of fittings to lower first cost & operating cost
- **Systems must be serviceable:**
  - Condenser & chiller tubes must be cleaned periodically
  - Coils & valves will need repair and service
  - All these operations require draining water out of equipment
  - Isolation valves needed for each piece of equipment
    - This prevents draining and refilling the entire system
  - Pipe unions and flanges to be located strategically
    - Easily dismantle piping for removal of coils, valves, etc.
- **Balance serviceability against first cost**

TYPICAL PIPING MATERIALS

In Water Systems, grade DWV hard copper is usually used for sizes up to 1 1/2 inches. Black steel pipe is usually used for pipe sizes 2 inches and larger. Galvanized steel may be used, but usually only for drainage lines. It is now customary to specify water treatment to control corrosion, and galvanized or wrought iron is not generally used.

Fittings for black steel pipe are usually welded for larger sizes (greater then 2 inches) or malleable iron screwed type for smaller sizes. Hard copper fittings are wrought copper or brass that are soldered or brazed.

Special conditions may require special materials, but this is beyond the scope of this presentation.

TYPICAL PIPING MATERIALS

- **For pipe sizes up to 1 1/2 inches:**
  - **Hard copper pipe (DWV grade)**
  - **Fittings: wrought copper or brass (soldered or brazed)**
- **For pipe sizes of 2 inches or greater:**
  - **Black steel pipe**
  - **Fittings: welded**
- **Galvanized steel pipe used only for drainage lines**

SUPPORT SPACING: TABLES 7, 8

Hangers or supports are required at intervals ranging from 8 ft. to 20 ft. depending on pipe size. See tables 7 and 8 below. Except at anchor points, pipe supports should not be rigid but allow some movement of the pipe. In many systems with several changes in direction, the expansion due to temperature changes can be taken care of in this way.

The hangers for chilled water piping are installed outside the insulation to prevent sweating. Thus, some means must be provided to prevent the hanger from crushing the insulation. This is usually a metal plate of suitable length and thickness, curved in cross section to fit around the bottom part of the insulation.

For hot water service, the hanger is usually around the pipe and both pipe and hanger are insulated together.

At flanges of pumps and heat exchangers, the piping should be supported so that no stress is imposed on the pump casing or the heat exchanger itself.

At pump suction and discharge flexible rubber or woven mesh, connectors are sometimes used to prevent stress and to compensate for slight misalignment. They are also supposed to prevent transmission of vibration to the piping, but they are not very effective for this purpose. Water is incompressible and a good conductor of vibration. Thus, pump vibration problems are best handled with spring type pipe hangers and providing a good mass under the pump. In large and important systems, it may be desirable to consult vibration experts.

SUPPORT SPACING: TABLES 7, 8

SCHEDULE 40 PIPE

Nominal Pipe Size (in)	Distance (ft)
3/4 - 1 1/4	8
1 1/2 - 2 1/2	10
3 - 3 1/2	12
4 - 6	14
8 -12	16
14 - 24	20

COPPER TUBING

Nominal Pipe Size (in)	Distance (ft)
5/8	6
7/8 - 1 1/8	8
1 3/8 - 2 1/8	10
2 5/8 - 5 1/8	12
6 1/8 - 8 1/8	14

Distance = distance between supports

- **Metal half sleeves used with hangers for chilled water pipe**
  - **Prevents crushing of insulation**

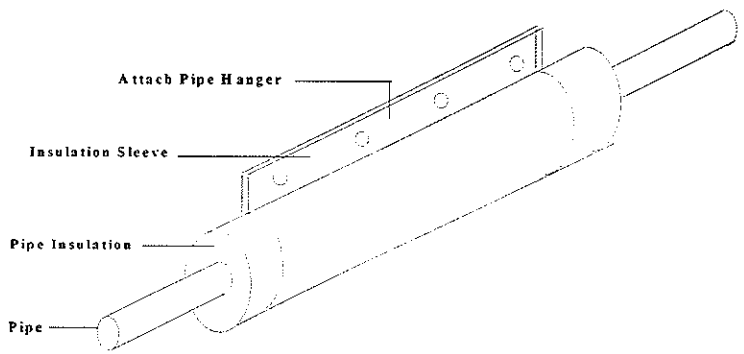

SUPPORTS

Often it becomes necessary to support a long straight vertical riser which goes from the bottom to the top of a building. In large size pipe this can represent a very large weight.

The sketch below shows a method of support which is inexpensive and provides a dirt leg with cleanout and a solid support with a minimum of hangers and steel fittings. Note that the weight of the water is carried directly to the foundation.

The joint between the horizontal main and the riser should be made with a forged welding tee and not by field cutting and welding.

VERTICAL RISER SUPPORT

- **Create dirt leg with cleanout**
- **Use forged welding tee**
- **Weight of water carried to the foundation**

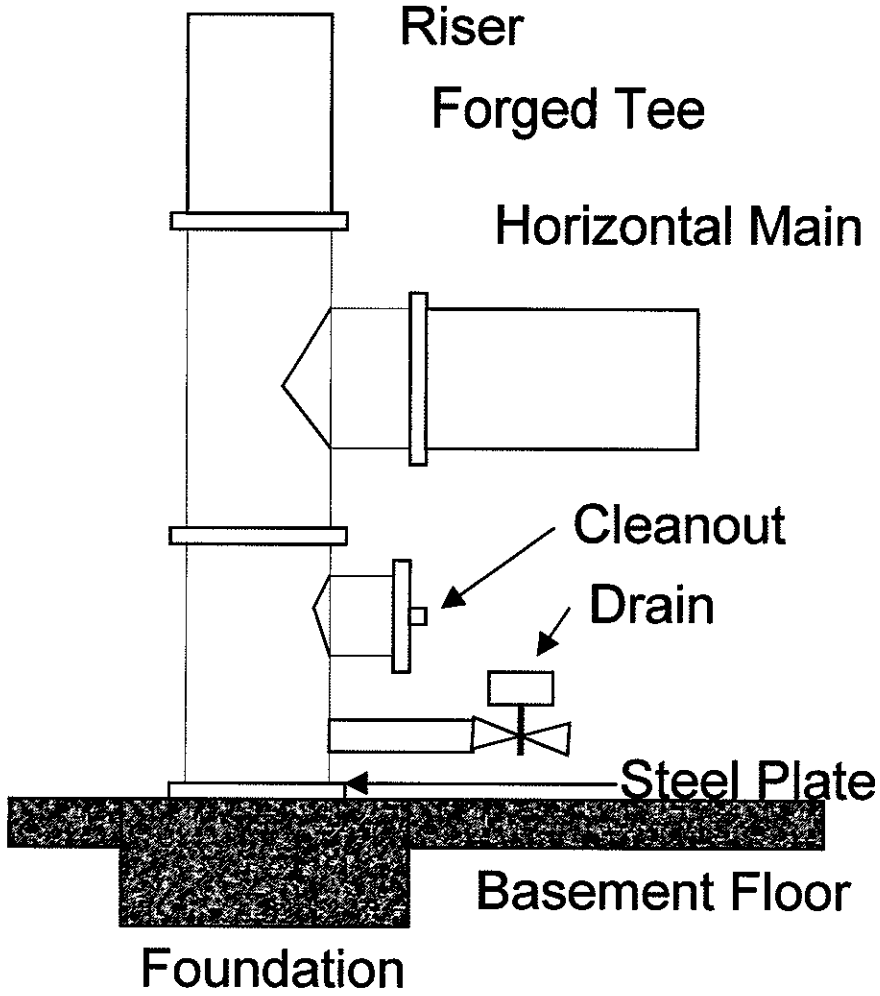

HOW HEAVY IS WATER PIPING?

Table 2 at the end of this section shows the physical properties of steel pipe. Let's say we have a nominal 4 inch black steel schedule 40 pipe running horizontally 100ft. How much does the pipe weigh when filled with water, and how many support hangers are needed.

From Table 2:

Weight of the pipe is	10,79 lbs/ft
Weight of the water is	05.51 lbs/ft
Total weight of the Pipe is	16.30 lbs/ft

Thus, 100 ft x 16.30 lbs/ft = 1,630 pounds

From table 7 a hanger is required every 14 ft.
Thus, 100/14 = 7 hangers are needed.

HOW HEAVY IS WATER PIPING?

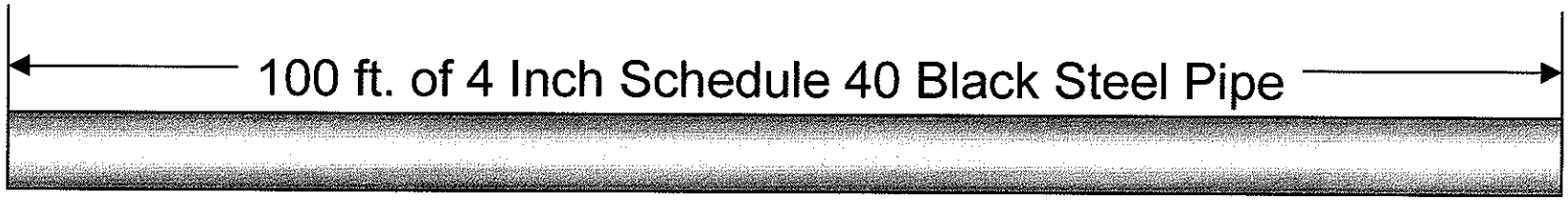

- **How heavy is 100 ft. of horizontal 4 inch schedule 40 black steel pipe?**
  - **From Table 2:**
  - **Weight of pipe/ft** **10. 79 lbs/ft**
  - **Weight of water/ft** **05.51 lbs/ft**
  - **Total weight/ft** **16.30 lbs/ft**
  - **Total weight = (100 ft x 16.30 lbs/ft) = 1,630 pounds**

- **How many pipe hangers needed?**
  - **From Table 8:**
  - **Distance between hangers is 14 ft.**
  - **Number of hangers = (100/14) = 7**

QUIZ

- Answer the quiz questions.
- The instructor will then review the answers with you.

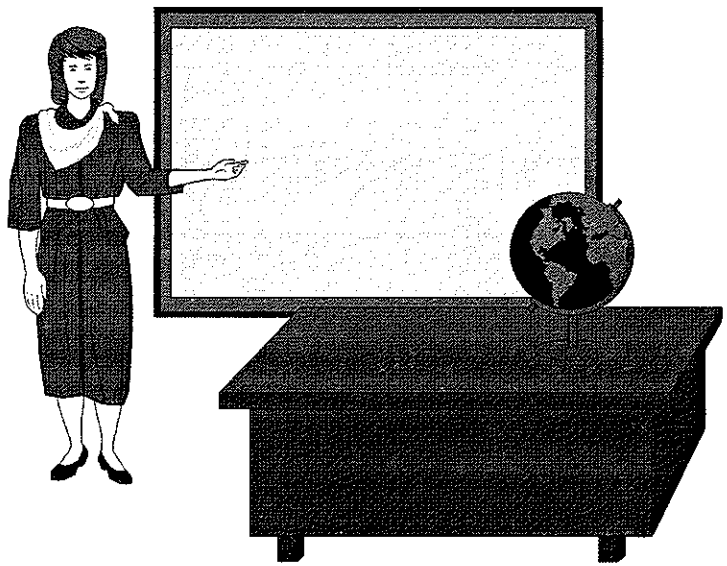

QUIZ

NAME: Quek Hwee Nor (Alpha Engineering Consultant)
DATE: 28 January 2002

1- How many Basic Water System types are there?
2

Name them: 1) Once Through 2) Recirculating.

2- How many types of Recirculating Water Systems are there? 2 Name them:

Open Re-circulating & Closed recirculating.

3- Name the two common types of Piping Return System layouts:

Direct and Reverse.

4- What three general principles should be followed in a good Water System design?

1) Make system as direct & uncomplicated as possible
2) Systems must be serviceable.
3) Balance serviceability against first cost.

5- What type of pipe is typically used in sizes 2 inches and higher? Black steel pipe

6- What type of pipe is typically used in sizes below 2 inches? Hard copper pipe (DnV grade)

7- What type of fitting and pipe joints are typically used with piping above 2 inches in size? welded.

8- How much does 100 ft of a 24 inch schedule ~~40~~ 80 black steel riser weigh?

Weight of pipe/ft = 94.60 lb/ft
Weight of water/ft = 184.6 lb/ft
Total wt/ft = (94.60 + 184.6) lb/ft
= 279.2 lb/ft.
Total wt = (279.2 × 100) lb
= 27920 lb.

How many gallons of water are in the Riser?

Weight of water/ft = 184.6 lb/ft
$= \frac{184.6}{8.32} = 22.13$ gal/ft
∴ There are 22.13(100ft) = 2213 gallons

VALVES

There are hundreds of types of valves, each one best suited to a particular application, but for our purposes only five of six types need to be considered:

Starting and Stopping Flow:
Gate valves are normally used for this function because in their wide open position, water flows straight through the valve body with minimal pressure drop. They are not practical for throttling flow.

The figure below shows an OS and Y gate valve with a rising stem. This type of valve is usually used for isolating pumps, coolers, and condensers. A quick glance at the stem reveals whether the valve is opened or closed. The stem threads are outside the valve where they are free from corrosion and can be easily lubricated.

With the stem extended, gate valves are very tall. It is often difficult to install them so that the stem does not interfere with fixed objects or block passages.

A **plug cock** has the same low pressure drop, when open, as a gate valve, and it is also excellent for throttling service or as a balancing valve. It can be used to perform both functions simultaneously.

STARTING AND STOPPING FLOW

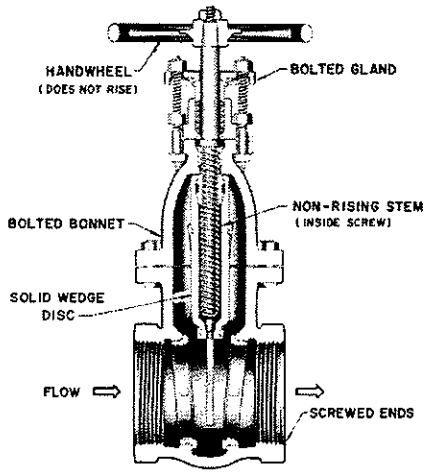

Gate Valve

- Minimum pressure drop when wide open
- *Used for service shut-off*
- Not for throttling or balancing
- Stem rises out of valve body
- Takes up large space

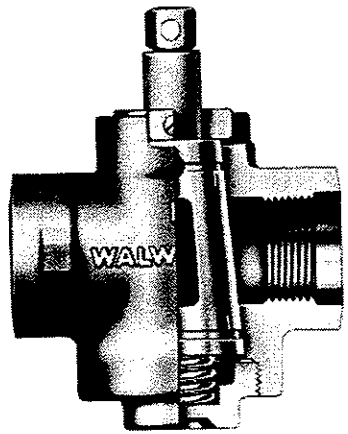

Courtesy of Walworth Co.

Plug Cock

- Minimum pressure drop when wide open
- *Good for throttling*
- *Good for balancing*
- Use indicator for valve open position when used for both close off and balancing

VALVES

Regulating or Throttling Flow:
Globe or Angle valves are usually used for this service. The percent flow is nearly proportional to the valve percent open position (near linear response). However, globe valves have a relatively high pressure drop when wide open.

An angle valve can be used advantageously for throttling. It's use saves one elbow and the wide open pressure drop is less that one half of a straight globe valve.

Control valves are normally automatically controlled globe valves because of their linear response.

If a globe or angle valve is used both for shut off and for balancing, an indicator should be used to mark the correct setting in the balance position. If only used for balancing, the hand wheel should be removed after adjustment to prevent accidental readjustment.

REGULATING AND THROTTLING FLOW

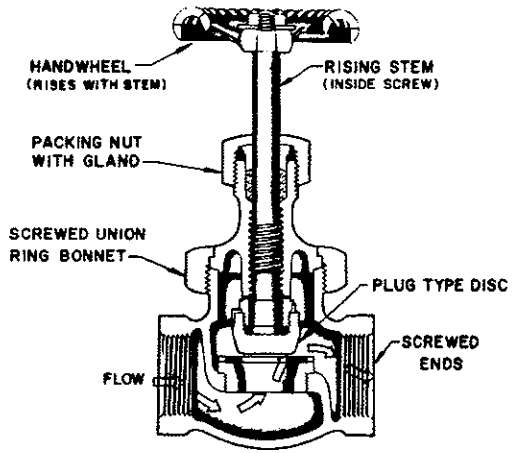

Globe Valve

Angle Globe Valve

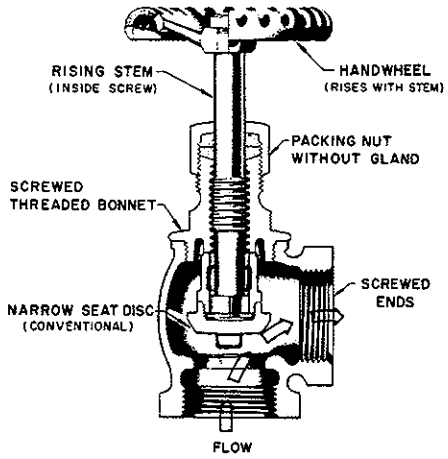

- *Good for throttling*
- *Can be automatic control valve*
- % flow is nearly proportional to the % open
- High pressure drop when open
- If used for balancing, remove wheel

- *Good for throttling*
- *Can be automatic control valve*
- Saves one elbow in circuit
- Less than 1/2 globe pressure drop when wide open
- Use indicator for valve open position when used for both close off and balancing

VALVES

Preventing Back Flow:

_The 15 [0] **Check valves** normally perform the single function of checking or preventing the reversal of flow in piping. Lift check valves are often used at a pump's discharge

If a pump operates between two water levels in an open system, a check valve must be placed near the pump discharge to prevent water from running backwards through the pump during shut down. This reversal of flow could damage pump seals, and completely drain the pump if it is located above the lower reservoir. This check valve should be of the non-slam type to prevent water hammer as the check closes.

If several pumps are installed in parallel, a check valve should be installed in each pump's discharge to prevent water being bypassed back through an idle pump. Water will always take the path of least resistance.

Specialty Valves:

There are several special purpose valves that may be used in piping systems. A couple of them are listed below.

Pressure Reducing Fill Valve:

These valves are occasionally used in air conditioning. One instance is when supplying clean city water to the lantern ring in a pump seal where the pressure must be regulated to be about 5 psi above the pump suction pressure.

Pressure Relief Valve:

These valves are also occasionally used in air conditioning. They prevent the build up of system pressure within the piping to where it might damage equipment, occupants, or operating personnel.

PREVENTING BACK FLOW

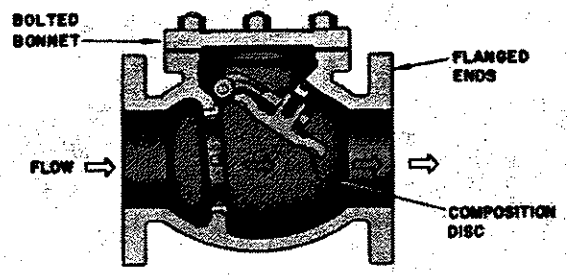

Swing Check

Lift Check

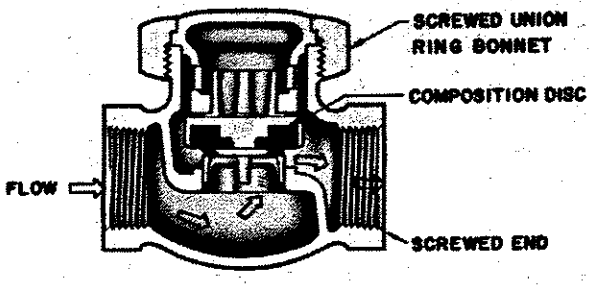

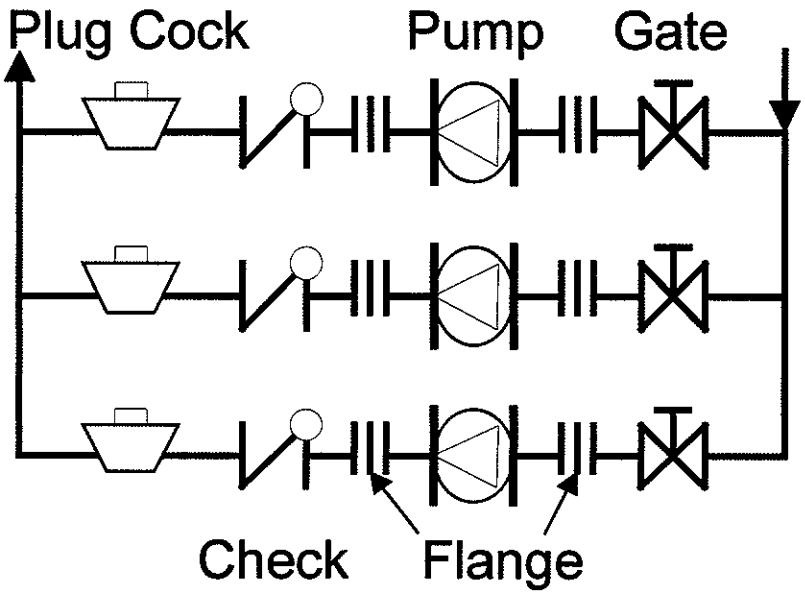

- **Swing check used in horizontal or vertical line for upward flow**
  - **Open circuits typical use**
- **Lift check only installed in horizontal lines**
  - **Pump discharge typical use**

Parallel Pumps:

- **Lift check valve for back flow**
- **Plug cock valve for isolation and balance**
- **Gate valve for isolation**
- **Flanges for pump service**

STRAINERS

Air bubbles usually do a pump more harm than small solid particles. In many Piping Systems, a certain amount of unwanted material can circulate without doing any great harm. In such cases, the need for a strainer is doubtful, and if one is used, it should be no finer then 20 mesh to prevent rapid clogging.

In a Condenser Water System utilizing a cooling tower, the strainer provided at the tower(see below) should be sufficient if no control valves are present in the circuit. A "mud ring" is usually provided around the strainer at the bottom of the tower to hold back heavy dirt. The dirt accumulates at the bottom of the tower where it can be easily removed during the annual maintenance period. Spare tower sump screens should be available to replace the one removed - thereby allowing the tower to continue to operate.

If a strainer is used in a water circuit, it is usually placed ahead of the pump suction to protect the pump and is often of the "Y" pattern shown below. Opening the blow-out valve allows the circuit water to flush out the dirt without shutting down the system. Shut off valves should be provided to isolate the strainer so that the strainer can be thoroughly cleaned or replaced during the annual maintenance period.

More exotic types of strainers are available to handle the filtering of "dirty" water sources sometimes used for condenser water - such as a river.

STRAINERS

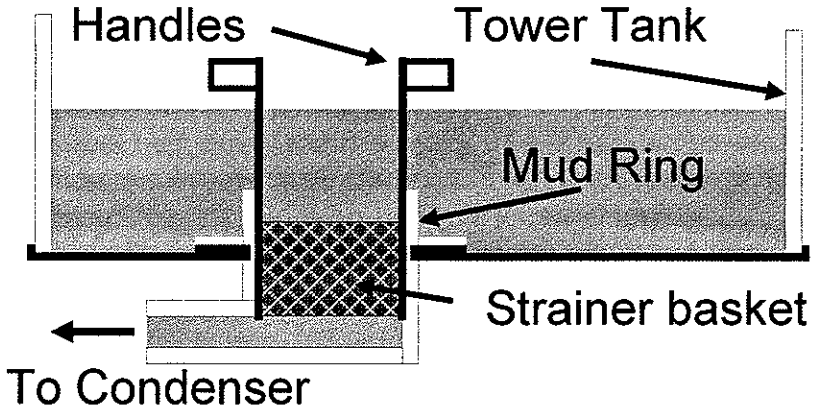

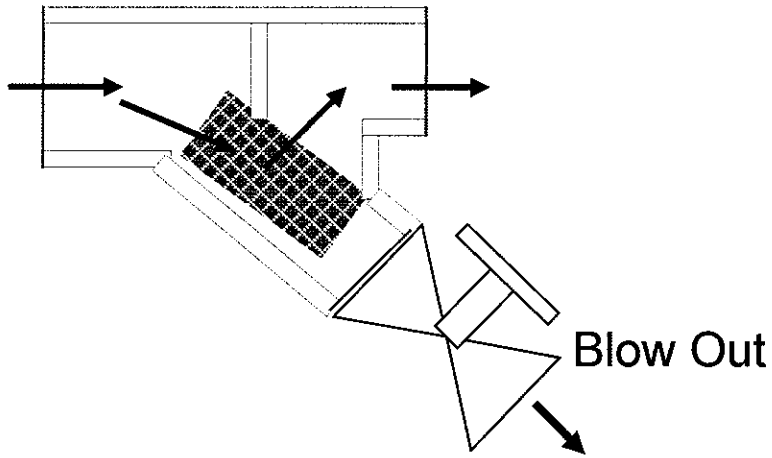

- **Tower sump strainer**
- **Mud ring holds dirt**
- **Clean bottom annually**
- **Replace with clean strainer periodically**

- **Piping strainer**
- **Typically use "Y" type**
- **Place ahead of pump suction**
- **Blow out periodically**
- **Replace or clean annually**

EXPANSION TANK

There are three types of expansion tanks:

1- An open tank (the tank is open to the atmosphere) The air can enter into the water through the air-water interface in the tank.

2- A closed tank that contains a captured volume of compressed air. The air can enter into the water through the air-water interface in the tank.

3- A diaphragm tank in which a flexible membrane is located between the air and water - thus preventing any air from entering the water in the tank.

Expansion tanks serve to take care of the expansion of the water in a closed system when its temperature changes, and to provide a place to replace water lost through pump packing gland leakage and other losses.

An open tank is preferred and is usually placed above the highest point in the piping at the top of the return main closest to the pump. This location maintains a positive pressure at the pump inlet. A system should have only one expansion tank. If it is impractical to install an open tank because of freezing problems, obtaining city water supply, or providing overflow drains, install a closed expansion tank as close as possible to the pump suction. The tank may need a vacuum breaker to prevent collapse of the tank if the system is drained.

The variation in system water volume can be found by calculating the total internal water volume of the system and multiplying by the change in specific volume of water between the highest and lowest temperature expected. This change is usually about 1% for chilled water and 3% for hot water systems (see table 15). A safety factor of 25% is then added. See section 3 of the Carrier System Design Manual for actual tank sizing equations.

TABLE15: TEMP	(Above 40F) % VOLUME INCREASE
100	0.6
150	1.8
200	3.5
300	8.3
400	15.0

The connection line from the expansion tank to the system should be at least 1 1/2 inches in size and not have any shut off valve. Insulate the tank and lines in a Chilled Water System.

The expansion tank also serves as the reference pressure point in the system. Where the tank contacts the system (contact point), the pressure equals the pressure of the air in the tank plus or minus any hydro-static head caused by the elevation difference between the tank liquid surface height and the contact point.

EXPANSION TANK

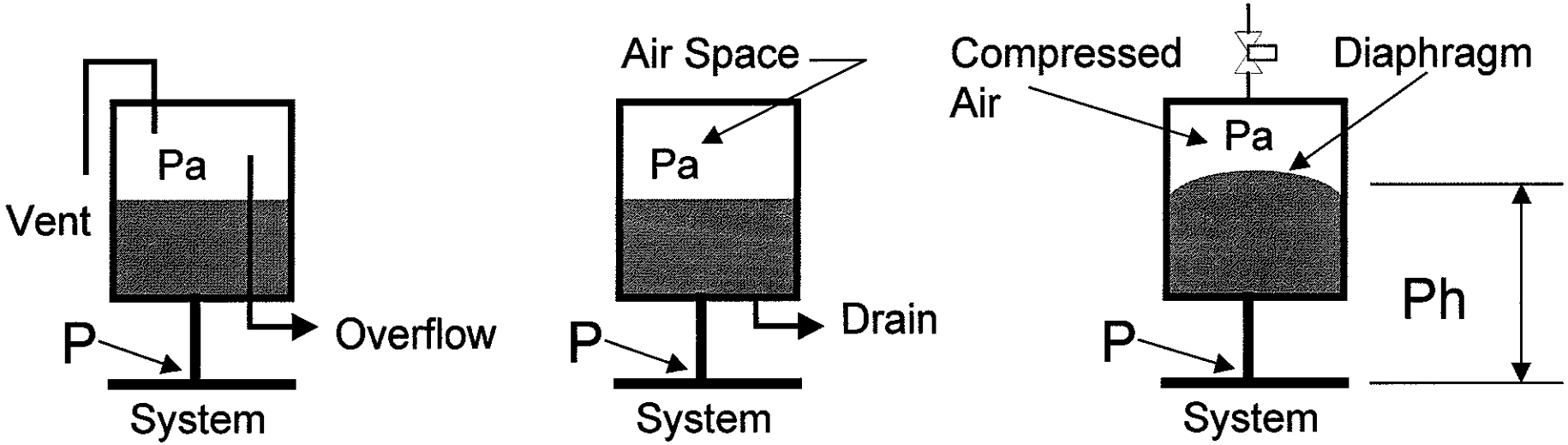

Open Tank:	Closed Tank:	Diaphragm Tank:
- Open to Air	- Captured Air Space	- Flexible Membrane
- Air-Water Interface	- Air-Water Interface	- No Air-Water Interface

- Allows for thermal expansion of water in system
- A place to replace water lost through leakage
- Connect as close to pump suction as possible
- Open tanks must be above highest point in piping
- Pressure (P) = air pressure (pa) + hydrostatic pressure (ph)

AIR ELIMINATION

Water has the tendency to absorb air and this tendency increases with the water temperature. Wherever air comes in contact with water in the piping circuit, the water will absorb some air. This takes place in a cooling tower or at the air-water interface in an expansion tank.

Air also has the tendency to come out of the water at low velocities, when the water is exposed to a low pressure drop, changes direction, or is heated. Separation of the air at at the pump suction and can be a major cause of pump cavitation and the erosion of the pump's impeller over time. It is recommended that a minimum velocity of 1.5 to 2.0 ft/sec in a 2 inch pipe be used to minimize air escaping from the water.

In order to minimize this effect, it is recommended that automatic air vents be placed on the leaving side of a coil or radiator and ahead of the control valve.

Dynamic air separators can also be used to centrifugally separate air from the water. The lighter weight is collected in the center and vented back to the expansion tank.

Thus, the expansion tank and air separator should be located on the return side of the pump to eliminate as much air as possible before the water reaches the pump.

Boilers also utilize dip tubes to create a low velocity region of the boiler. Air is then collected in the low velocity region and vented back to the expansion tank.

AIR ELIMINATION

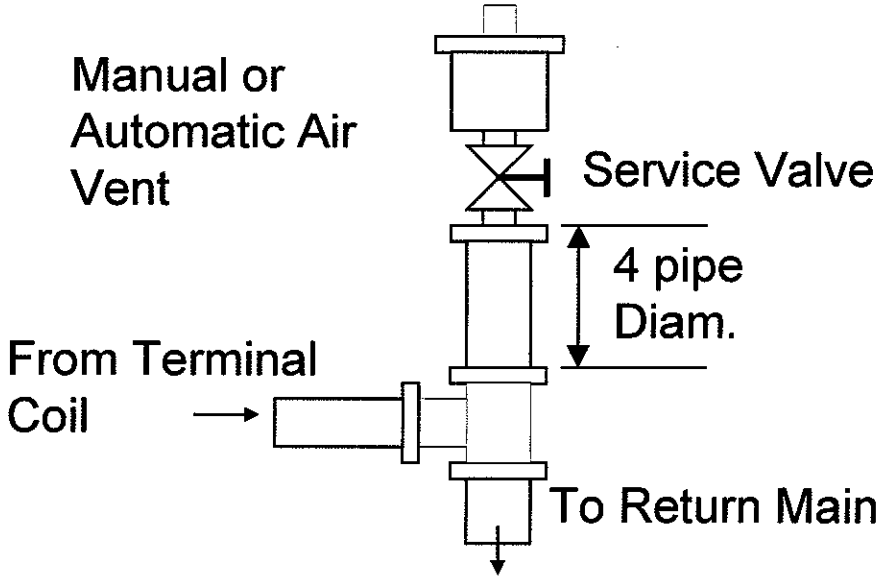

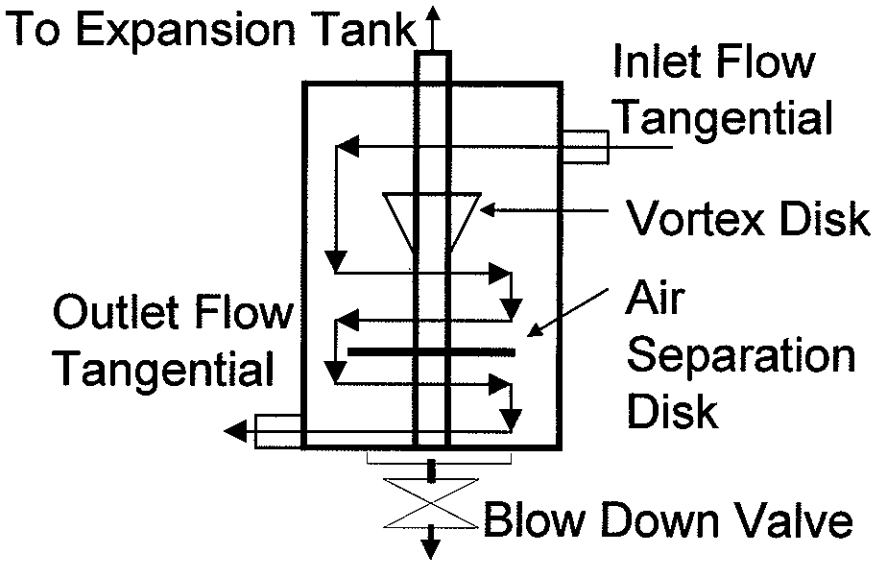

- **Water absorbs air**
- **Air separates at:**
  - **Low velocities**
  - **Changes in direction**
  - **When heated**
- **Separated air causes problems**
- **Vent return side of coils**

- **Use air separators**
- **Locate on suction side of pump**
- **Vent air back to expansion tank**

OTHER ACCESSORIES

Piping systems are meant to deliver definite gpm's at specified points in the system. After the system is in operation, it often becomes necessary to to find out if the specified quantities are in fact being delivered. Pressure gages, thermometer wells, and possibly flow meters should be provided at all necessary locations to effect measurement and later to assist the system operator during trouble shooting.

Gages:
Each pump should be furnished with a certified characteristic curve of head versus flow. Gage cocks should be provided as close as possible to pump suction, and discharge flanges in order to determine the pressure drop across the pump. Gages can be temporarily mounted in the gage cocks for measurement. Permanent installation of the gages would cause their destruction over time due to vibration. The pump flow can be read from the chart as a fairly accurate indication of flow.

Flow Meters:
An accurate determination of flow is done by a testing, adjusting and balancing contractor when the system is initially commissioned.

In such cases, a standard ASME orifice plate is installed between two flanges with pressure taps on either side.

The orifice plate forms a dam across the pipe and can collect dirt over time. Additionally, it imposes a fairly large pressure drop during system operation. After tests are completed, the orifice is replaced by a flat disk with a hole equal to the pipe internal diameter.

Thermometers:
Thermometer wells should be installed to assist the system operator in routine operation and trouble shooting. Temperature readings should be provided at all points where readings are generally needed.

Direct Digital Control Systems:
With the advent of Direct Digital Control systems, the use of thermister type sensors located in thermometer wells and pressure sensors - all tied back to a central computer allow for regular tracking of system performance and reporting.

Sleeves:
Sleeves are usually provided where piping passes through walls and floors. The sleeves are usually flush with both sides of the wall, where as they generally protrude up from the floor by several inches to prevent water leakage from one floor to another. The Carrier System Design Manual (Section 3) provides more detailed information on piping accessories.

PROVING PERFORMANCE

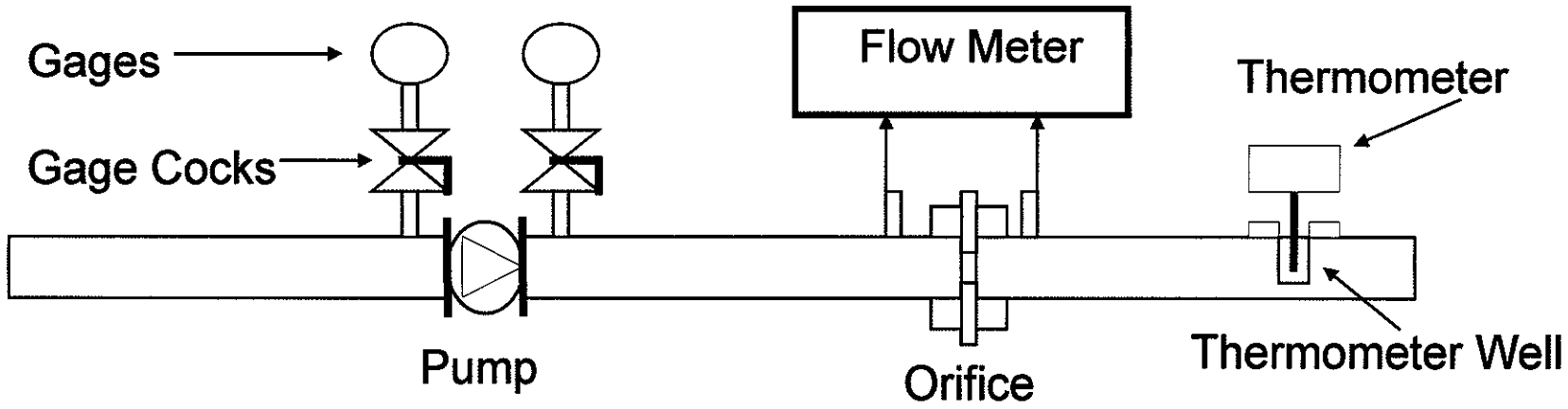

- Tab contractor determines flow at commissioning time
- Prove flow with a pump curve and gages
- Gage cocks for temporary installation of gages
- Vibration destroys gages over time
- Prove flow with flow meter and ASME standard orifice
- Remove orifice during operation
- Install thermometers and wells as needed
- Use of DDC control system simplifies measurement and continual reporting

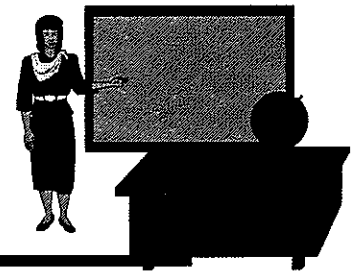

QUIZ

- **Answer the following quiz question.**
- **The instructor will then review the answers with you.**
- **Question:**
  For the sketch below, add the following accessories in the correct locations & complete the circuit:
  1- service valves
  2- "Y" type strainer
  3- check valve
  4- pump
  9- two-way control valve
  5- single balance valve
  6- expansion tank
  7- pressure gages
  8- air separator

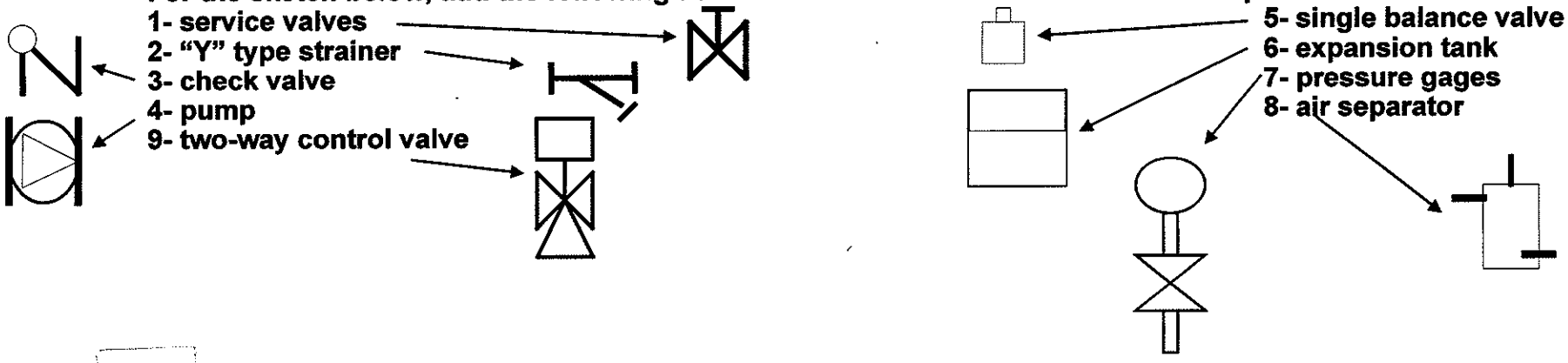

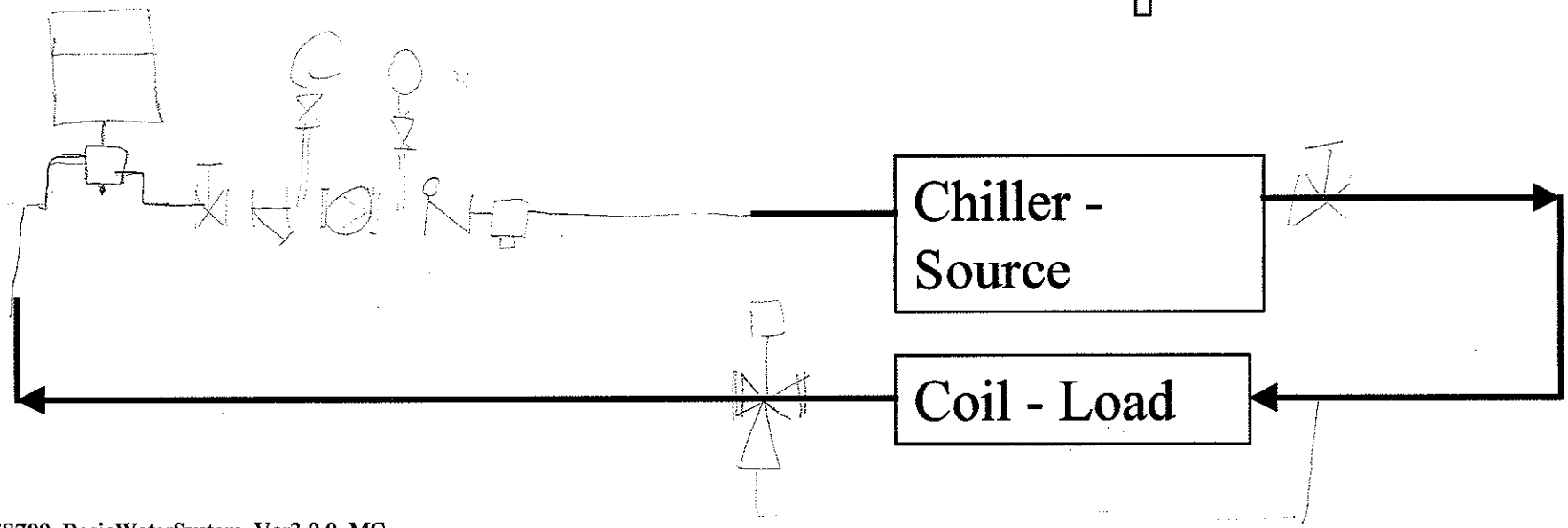

REFERENCE TABLES

- **Notice Reference Tables - Next Few Pages**
  - Table 2 (Physical Properties of Steel Pipe)
  - Table 3 (Physical Properties of Copper Tubing)
  - Table 4 (Max. Service Pressure for Solder Joints)
  - Table 5 (Thermal Expansion of Copper Tubing and Steel Pipe)
  - Charts 1 & 2 (Copper and Steel Expansion Loops)
  - Table 6 (Steel Expansion Offsets)
  - Table 9 (General Purpose Valves)
  - Table 7 (Recommended Steel Pipe Support Spacing)
  - Table 8 (Recommended Copper Tubing Support Spacing)

TABLE 2 (Properties of Steel Pipe)

NOM. PIPE SIZE (in.)	SCHEDULE NO.†	OUTSIDE DIAM (in.)	INSIDE DIAM (in.)	WALL THICK-NESS (in.)	WEIGHT OF PIPE (lb/ft)	WT OF WATER IN PIPE* (lb/ft)	OUTSIDE SURFACE (sq ft/ft)	INSIDE SURFACE (sq ft/ft)	TRANS-VERSE AREA (sq in.)
⅛	40(S)	.405	.269	.068	.244	.0246	.106	.0705	.0568
	80(X)	.405	.215	.095	.314	.0157	.106	.0563	.0364
¼	40(S)	.540	.364	.088	.424	.0451	.141	.0955	.1041
	80(X)	.540	.302	.119	.535	.0310	.141	.0794	.0716
⅜	40(S)	.675	.493	.091	.567	.0827	.177	.1295	.1910
	80(X)	.675	.423	.126	.738	.0609	.177	.1106	.1405
½	40(S)	.840	.622	.109	.850	.1316	.220	.1637	.3040
	80(X)	.840	.546	.147	1.087	.1013	.220	.1433	.2340
¾	40(S)	1.050	.824	.113	1.130	.2301	.275	.2168	.5330
	80(X)	1.050	.742	.154	1.473	.1875	.275	.1948	.4330
1	40(S)	1.315	1.049	.133	1.678	.3740	.344	.2740	.8640
	80(X)	1.315	.957	.179	2.171	.3112	.344	.2520	.7190
1¼	40(S)	1.660	1.380	.140	2.272	.6471	.434	.3620	1.495
	80(X)	1.660	1.278	.191	2.996	.5553	.434	.3356	1.283
1½	40(S)	1.900	1.610	.145	2.717	.8820	.497	.4213	2.036
	80(X)	1.900	1.500	.200	3.631	.7648	.497	.3927	1.767
2	40(S)	2.375	2.067	.154	3.652	1.452	.622	.5401	3.355
	80(X)	2.375	1.939	.218	5.022	1.279	.622	.5074	2.953
2½	40(S)	2.875	2.469	.203	5.79	2.072	.753	.6462	4.788
	80(X)	2.875	2.323	.276	7.66	1.834	.753	.6095	4.238
3	40(S)	3.500	3.068	.216	7.57	3.20	.916	.802	7.393
	80(X)	3.500	2.900	.300	10.25	2.86	.916	.761	6.605
3½	40(S)	4.000	3.548	.226	9.11	4.28	1.047	.929	9.89
	80(X)	4.000	3.364	.318	12.51	3.85	1.047	.880	8.89
4	40(S)	4.500	4.026	.237	10.79	5.51	1.178	1.055	12.73
	80(X)	4.500	3.826	.337	14.98	4.98	1.178	1.002	11.50
5	40(S)	5.563	5.047	.258	14.62	8.66	1.456	1.321	20.01
	80(X)	5.563	4.813	.375	20.78	7.87	1.456	1.260	18.19
6	40(S)	6.625	6.065	.280	18.97	12.51	1.735	1.587	28.99
	80(X)	6.625	5.761	.432	28.57	11.29	1.735	1.510	26.07
8	40(S)	8.625	7.981	.322	28.55	21.6	2.26	2.090	50.0
	80(X)	8.625	7.625	.500	43.39	19.8	2.26	2.006	45.6
10	40(S)	10.750	10.020	.365	40.48	34.1	2.81	2.62	78.9
	60(X)	10.750	9.750	.500	54.70	32.4	2.81	2.55	74.7
	80	10.750	9.564	.593	64.33	31.1	2.81	2.50	71.8
12	30(S)	12.750	12.090	.330	43.80	49.6	3.34	3.17	115.0
	40	12.750	11.938	.406	53.53	48.5	3.34	3.13	111.9
	(X)	12.750	11.750	.500	65.40	46.9	3.34	3.08	108.0
	80	12.750	11.376	.687	88.51	44.0	3.34	2.98	101.6
14	30(S)	14.000	13.250	.375	54.60	59.8	3.67	3.46	138.0
	40	14.000	13.125	.438	63.37	58.5	3.67	3.44	135.3
	(X)	14.000	13.000	.500	72.10	55.8	3.67	3.40	133.0
	80	14.000	12.500	.750	106.31	51.2	3.67	3.27	122.7
16	30(S)	16.000	15.250	.375	62.40	79.1	4.18	3.99	183.0
	40(X)	16.000	15.000	.500	82.77	76.5	4.18	3.93	176.7
	80	16.000	14.314	.843	136.46	69.7	4.18	3.75	160.9
18	(S)	18.000	17.250	.375	70.60	100.8	4.71	4.52	234.0
	(X)	18.000	17.000	.500	93.50	98.3	4.71	4.45	227.0
	40	18.000	16.874	.562	104.75	97.2	4.71	4.42	224.0
	80	18.000	16.126	.937	170.75	88.5	4.71	4.22	204.2
20	20(S)	20.000	19.250	.375	78.60	126.7	5.24	5.04	291.0
	30(X)	20.000	19.000	.500	104.20	122.5	5.24	4.97	284.0
	40	20.000	18.814	.593	122.91	120.4	5.24	4.93	278.0
	80	20.000	17.938	1.031	208.87	109.4	5.24	4.70	252.7
24	20(S)	24.000	23.250	.375	94.60	184.6	6.28	6.08	426.0
	(X)	24.000	23.000	.500	125.50	179.0	6.28	6.03	415.0
	40	24.000	22.626	.687	171.17	174.2	6.28	5.92	402.1
	80	24.000	21.564	1.218	296.36	158.2	6.28	5.65	365.2

*To change "Wt of Water in Pipe (lb/ft)" to "Gallons of Water in Pipe (gal/ft)," divide values in table by 8.34.

†S is designation of standard wall pipe.
X is designation of extra strong wall pipe.

TABLE 3 (Properties of Copper Tubing)

CLASSIFICATION	NOM. TUBE SIZE (in.)	OUTSIDE DIAM (in.)	STUBBS GAGE	WALL THICK-NESS (in.)	INSIDE DIAM (in.)	TRANS-VERSE AREA (sq in.)	MINIMUM TEST PRESSURE (psi)	WEIGHT OF TUBE (lb/ft)	WT OF WATER IN TUBE* (lb/ft)	OUTSIDE SURFACE (sq ft/ft)
HARD	¼	⅜	23	.025	.325	.083	1000	.106	.036	.098
	⅜	½	23	.025	.450	.159	1000	.144	.069	.131
	½	⅝	22	.028	.569	.254	890	.203	.110	.164
	¾	⅞	21	.032	.811	.516	710	.328	.224	.229
	1	1⅛	20	.035	1.055	.874	600	.464	.379	.295
	1¼	1⅜	19	.042	1.291	1.309	590	.681	.566	.360
Govt. Type "M" 250 Lb Working Pressure	1½	1⅝	18	.049	1.527	1.831	580	.94	.793	.425
	2	2⅛	17	.058	2.009	3.17	520	1.46	1.372	.556
	2½	2⅝	16	.065	2.495	4.89	470	2.03	2.120	.687
	3	3⅛	15	.072	2.981	6.98	440	2.68	3.020	.818
	3½	3⅝	14	.083	3.459	9.40	430	3.58	4.060	.949
	4	4⅛	13	.095	3.935	12.16	430	4.66	5.262	1.08
	5	5⅛	12	.109	4.907	18.91	400	6.66	8.180	1.34
	6	6⅛		.122	5.881	27.16	375	8.91	11.750	1.60
	8	8⅛		.170	7.785	47.6	375	16.46	20.60	2.13
HARD	⅜	½	19	.035	.430	.146	1000	.198	.063	.131
	½	⅝		.040	.545	.233	1000	.284	.101	.164
	¾	⅞		.045	.785	.484	1000	.454	.209	.229
Govt. Type "L" 250 Lb Working Pressure	1	1⅛		.050	1.025	.825	880	.653	.358	.295
	1¼	1⅜		.055	1.265	1.256	780	.882	.554	.360
	1½	1⅝		.060	1.505	1.78	720	1.14	.770	.425
	2	2⅛		.070	1.985	3.094	640	1.75	1.338	.556
	2½	2⅝		.080	2.465	4.77	580	2.48	2.070	.687
	3	3⅛		.090	2.945	6.812	550	3.33	2.975	.818
	3½	3⅝		.100	3.425	9.213	530	4.29	4.000	.949
	4	4⅛		.110	3.905	11.97	510	5.38	5.180	1.08
	5	5⅛		.125	4.875	18.67	460	7.61	8.090	1.34
	6	6⅛		.140	5.845	26.83	430	10.20	11.610	1.60
HARD	¼	⅜	21	.032	.311	.076	1000	.133	.033	.098
	⅜	½	18	.049	.402	.127	1000	.269	.055	.131
	½	⅝	18	.049	.527	.218	1000	.344	.094	.164
	¾	⅞	16	.065	.745	.436	1000	.641	.189	.229
	1	1⅛	16	.065	.995	.778	1000	.839	.336	.295
	1¼	1⅜	16	.065	1.245	1.217	630	1.04	.526	.360
Govt. Type "K" 400 Lb Working Pressure	1½	1⅝	15	.072	1.481	1.722	580	1.36	.745	.425
	2	2⅛	14	.083	1.959	3.014	510	2.06	1.300	.556
	2½	2⅝	13	.095	2.435	4.656	470	2.92	2.015	.687
	3	3⅛	12	.109	2.907	6.637	450	4.00	2.870	8.18
	3½	3⅝	11	.120	3.385	8.999	430	5.12	3.890	.949
	4	4⅛	10	.134	3.857	11.68	420	6.51	5.05	1.08
	5	5⅛		.160	4.805	18.13	400	9.67	7.80	1.34
	6	6⅛		.192	5.741	25.88	400	13.87	11.20	1.60
SOFT	¼	⅜	21	.032	.311	.076	1000	.133	.033	.098
	⅜	½	18	.049	.402	.127	1000	.269	.055	.131
	½	⅝	18	.049	.527	.218	1000	.344	.094	.164
	¾	⅞	16	.065	.745	.436	1000	.641	.189	.229
	1	1⅛	16	.065	.995	.778	780	.839	.336	.295
	1¼	1⅜	16	.065	1.245	1.217	630	1.04	.526	.360
Govt. Type "K" 250 Lb Working Pressure	1½	1⅝	15	.072	1.481	1.722	580	1.36	.745	.425
	2	2⅛	14	.083	1.959	3.014	510	2.06	1.300	.556
	2½	2⅝	13	.095	2.435	4.656	470	2.92	2.015	.687
	3	3⅛	12	.109	2.907	6.637	450	4.00	2.870	.818
	3½	3⅝	11	.120	3.385	8.999	430	5.12	3.89	.949
	4	4⅛	10	.134	3.857	11.68	420	6.51	5.05	1.08
	5	5⅛		.160	4.805	18.13	400	9.67	7.80	1.34
	6	6⅛		.192	5.741	25.88	400	13.87	11.2	1.60

*To change "Wt of Water in Tube (lb/ft)" to "Gallons of Water in Tube (gal/ft)," divide values in table by 8.34.

TABLES 4 AND 5

SOLDER USED IN JOINTS	SERVICE TEMP (F)	MAXIMUM SERVICE PRESSURE (PSI)			
		Water			Steam
		¼" to 1⅛" Incl.	1⅜" to 2⅛" Incl.	2⅝" to 4⅛" Incl.	All
50-50 Tin-Lead	100	200	175	150	—
	150	150	125	100	—
	200	100	90	75	—
	250	85	75	50	15
95-5 Tin-Antimony or 95-5 Tin-Lead	100	500	400	300	—
	150	400	350	275	—
	200	300	250	200	—
	250	200	175	150	15
Solders Melting At or Above 1100 F	350	270	190	155	120

Extracted from *American Standard Wrought-Copper and Wrought-Bronze Solder-Joint Fittings*, (USAS B16.22), with the permission of the publisher, The American Society of Mechanical Engineers, 29 West 39th Street, New York 18, New York.

TABLE 5—THERMAL LINEAR EXPANSION OF COPPER TUBING AND STEEL PIPE

(Inches per 100 feet)

TEMP RANGE (F)	COPPER TUBING	STEEL PIPE
0	0	0
50	.56	.37
100	1.12	.76
150	1.69	1.15
200	2.27	1.55
250	2.85	1.96
300	3.45	2.38
350	4.05	2.81
400	4.65	3.25
450	5.27	3.70
500	5.89	4.15

NOTE: Above data are based on expansion from 0°F but are sufficiently accurate for all other temperature ranges.

CHARTS 1 (Copper) AND 2 (Steel)

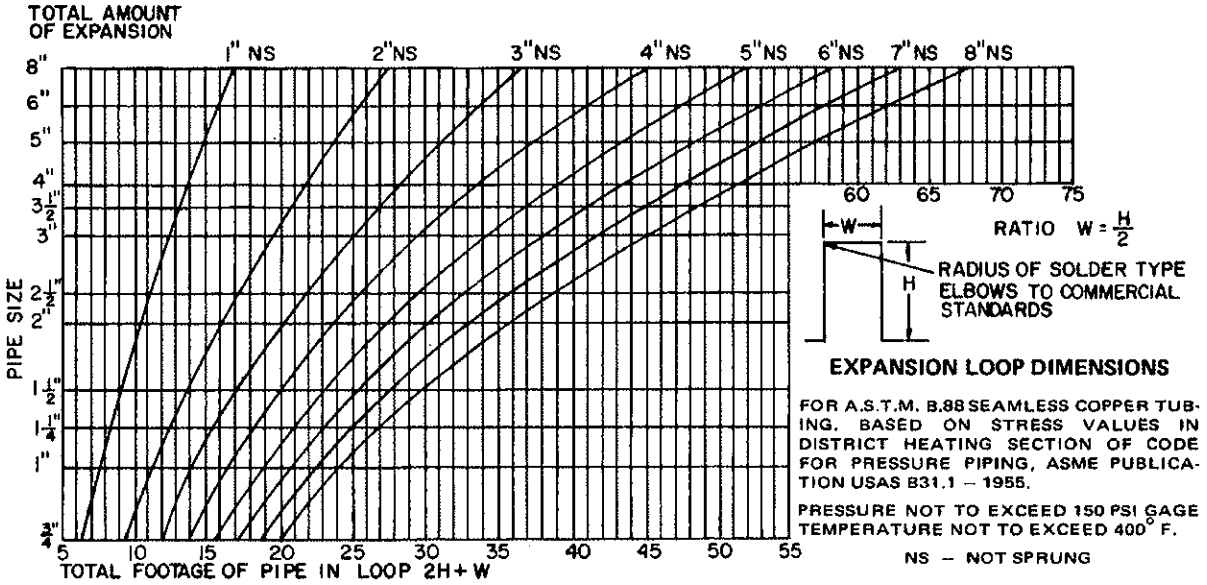

Data from Ric-Wil Co

CHART 2—STEEL EXPANSION LOOPS

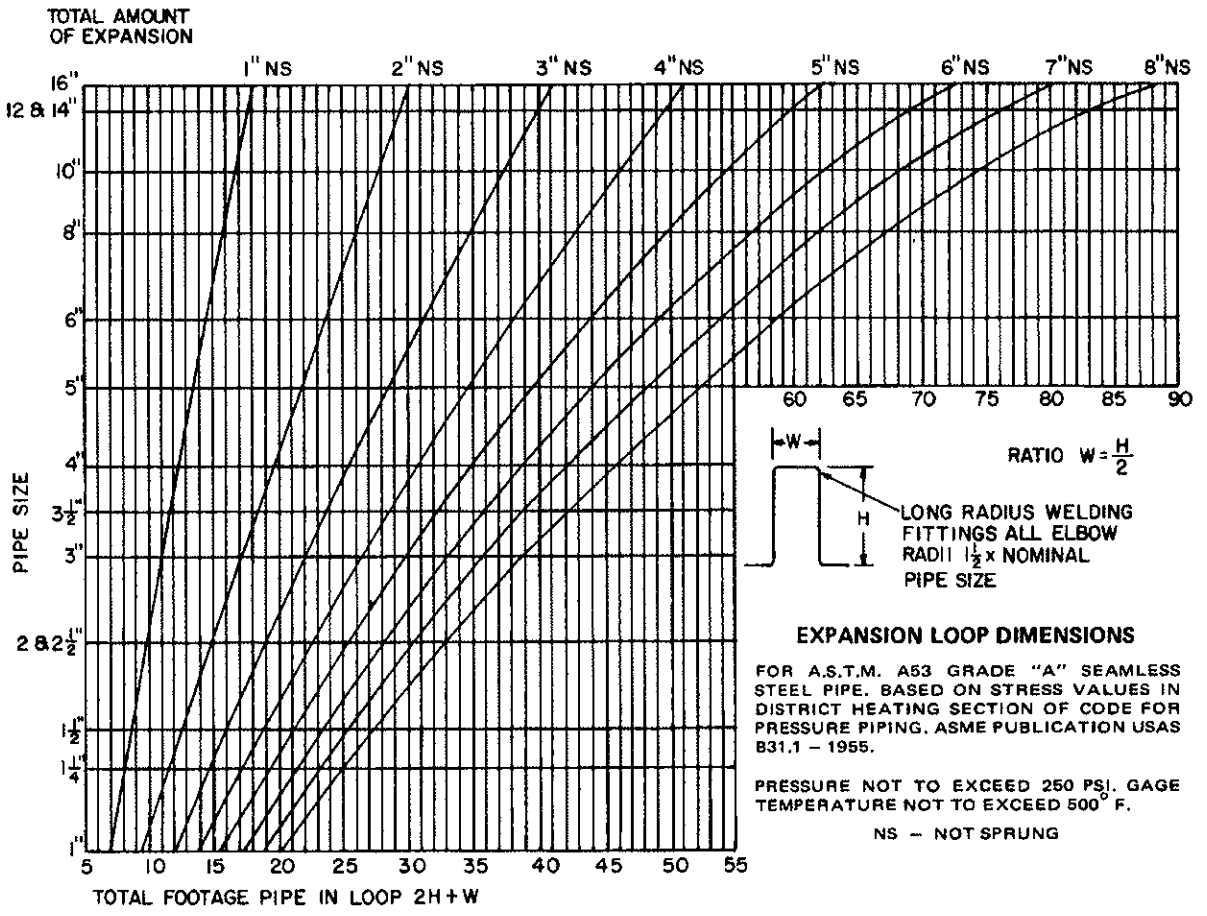

TABLES 6 AND 9

TABLE 6—STEEL EXPANSION OFFSETS

PIPE SIZE	EXPANSION OF LONGEST LEG								
	1″	1½″	2″	2½″	3″	3½″	4″	4½″	5″
2″	8	11	13	15	16	17	18	19	20
2½″	9	12	14	16	17	18	19	21	22
3″	10	13	15	17	18	19	20	22	23
4″	11	14	16	18	19	22	22	24	25
5″	12	15	17	19	21	23	25	27	28
6″	13	16	19	21	23	25	27	29	31
8″	18	20	22	25	27	29	31	33	35
10″	20	23	26	28	30	33	35	38	40
12″	22	26	29	32	34	37	40	43	45
	MINIMUM FEET REQUIRED								

LONG LEG

NOTES

TABLE 9—GENERAL PURPOSE VALVES

	WATER	STEAM	REFRIGERANT*
VALVE CONSTRUCTION			
A. Bonnet and body connections			
1. Threaded	Satisfactory	Satisfactory (Low Press)	Not Recommended
2. Union	Satisfactory	Satisfactory	Not Recommended
3. Bolted	Satisfactory	Satisfactory	Satisfactory
4. Welded	Satisfactory	Satisfactory (High Press)	Satisfactory
5. Pressure-seal	Satisfactory	Satisfactory	Satisfactory
B. Valve stem, operation			
1. Rising stem, outside screw	Satisfactory	Satisfactory	Satisfactory
2. Rising stem, inside screw	Satisfactory	Satisfactory	Satisfactory
3. Non-rising stem, inside screw	Satisfactory (non-corrosive brines)	Not Recommended	Not Recommended
4. Sliding stem	Satisfactory	Satisfactory	Not Recommended
C. Valve connections to pipe			
1. Screwed	Satisfactory	Satisfactory	Not Recommended
2. Welded	Satisfactory	Satisfactory	Recommended
3. Brazed	Satisfactory	Satisfactory (Low Temp)	Recommended
4. Soldered	Satisfactory	Satisfactory (Low Temp)	Satisfactory
5. Flared	Satisfactory	Satisfactory	Satisfactory
6. Flanged	Satisfactory (non-corrosive brines)	Satisfactory	Satisfactory
DISC CONSTRUCTION			
Gate Valve			
1. Solid wedge	Satisfactory	Satisfactory	Not Recommended
2. Split wedge	Satisfactory	Satisfactory	Not Recommended
3. Flexible wedge	Satisfactory	Recommended	Not Recommended
4. Double disc, parallel seat	Satisfactory	Not Recommended	Not Recommended
Globe, Angle, "Y" Valve			
1. Plug disc	Satisfactory	Satisfactory	Satisfactory
2. Conventional (Narrow-seat)	Satisfactory	Not Recommended	Satisfactory
3. Needle valve	Satisfactory	Satisfactory	Satisfactory
4. Composition disc	Satisfactory	Satisfactory (Low Press)	Satisfactory
Plug Cock Valve	Satisfactory	Satisfactory	Not Recommended

*For Refrigerants 12, 22, 500 and 502 only.

SUPPORT SPACING: TABLES 7, 8

SCHEDULE 40 STEEL PIPE

Nominal Pipe Size (in)	Distance (ft)
3/4 - 1 1/4	8
1 1/2 - 2 1/2	10
3 - 3 1/2	12
4 - 6	14
8 -12	16
14 - 24	20

COPPER TUBING

Nominal Pipe Size (in)	Distance (ft)
5/8	6
7/8 - 1 1/8	8
1 3/8 - 2 1/8	10
2 5/8 - 5 1/8	12
6 1/8 - 8 1/8	14

Distance = Distance Between Supports

- **Metal half sleeves used with hangers for chilled water pipe**
  - **Prevents crushing of insulation**

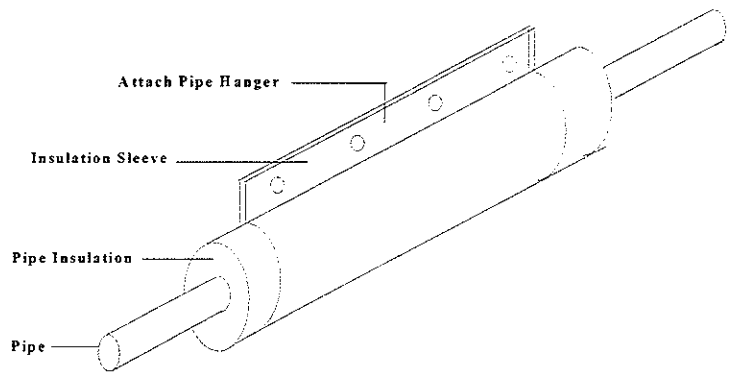

Fan brake horsepower (constant fan type, size and air density):

$$BHP_2 = BHP_1 \times \left[\frac{Cfm_2}{Cfm_1}\right]^3 \text{ or } \left[\frac{RPM_2}{RPM_1}\right]^3$$

BHP = Brake horsepower = Power required at the fan shaft
MHP = Motor horsepower = Power required at the motor shaft
MHP = BHP (direct-drive fans)
MHP = BHP x Drive loss multiplier (belt-drive fans) - typical for belt-drive is 1.05. Variable-pitch drives may be significantly higher.

Water System Design Targets & Formulae:

Typical chilled water supply temperature: 44 - 45 ° F
Typical chilled water loop rise: 10 ° F
Typical chiller GPM per ton cooling capacity: 2.4

Typical hot water supply temperature: 140 - 180 ° F (usually reset downward at reduced load)
Typical hot water loop rise (range): 20 - 40 ° F

Typical condenser water supply temperature (from cooling tower): 85 ° F

Typical condenser/tower loop rise (mechanical refrigeration): 10 ° F
Typical condenser/tower GPM per ton cooling capacity (mechanical refrigeration): 3.0

Typical condenser/tower loop rise (absorption refrigeration): 17 ° F
Typical condenser/tower GPM per ton cooling capacity (absorption refrigeration): 3.6

Fan Coils:

- 8-12 $^{\circ}$ F rise (up to 16 $^{\circ}$ F for on/off control)
- 10 ft. ΔP_w
- Size valve at unit connection size and 1-2 times coil ΔP_w
- Use 2-position, not modulating, valves

Air Handling Unit Coils:

- 10-15 ft. ΔP_w
- 1-12 FPS tube velocity (1 FPS = laminar flow)
- Size valve @ 1-2 times coil ΔP_w and 25-50% of loop ΔP_w (for authority)
- For modulated valves, maximize rangeability
- Use modulating valves most often
- Strive for linear flow/capacity response by using equal % valve (plug/seat configuration)
- Select $C_v \leq$ calculated requirement

C_v = GPM @ 1 psi ΔP_w

$$C_v = \frac{GPM}{.67x\sqrt{\Delta Pw}}$$

$$\Delta P_w = \left(\frac{GPM}{Cv}\right)^2 \text{ x } 2.31$$

$$2.31 = \frac{Ft.w.g.}{psi}$$

Capacity or load (Btuh) = 500 x GPM x Rise

$$\text{where: } 500 = 60\frac{\text{Minutes}}{\text{Hour}} \text{ x } 8.34\frac{\text{Pounds}}{\text{Gallon water @ 60F}}$$

GPM = volumetric flow rate, U.S. gallons per minute
Rise = Water temperature change, $^{\circ}$F

$$\text{Chiller tons} = \frac{GPM_{CW} \text{ x Rise}}{24}$$

$$\text{Chiller tons (mechanical refrig.)} = \frac{GPM_{COND} \text{ x Rise}}{30}$$

$$\text{Chiller tons (absorption refrig.)} = \frac{GPM_{COND} \text{ x Rise}}{61}$$

Schedule 40, closed-system water piping guidelines (e.g. chilled or hot water)

- Not less than 1.5 FPS (feet per second), or it will not entrain air.
- 2 in. or less; 4 FPS maximum, but not more than 10 ft. water gauge / 100 ft. equivalent length
- greater than 2 in; maximum 4 ft. water gauge / 100 ft. equivalent length, but not more than 15 FPS (to avoid noise and erosion).

Schedule 40, open-system water piping guidelines (e.g. cond./ cooling tower)

- 10 ft. water gauge / 100 ft. equivalent length or less, but never more than 15 FPS.

Water Pumps

Water system resistance curve: $HEAD_2 = HEAD_1 \times \left[\frac{GPM_2}{GPM_1}\right]^2$

where: HEAD = Dynamic (frictional) resistance to flow in feet water gauge / 100 ft. equivalent length
$Condition_1$ = Base reference or known condition
$Condition_2$ = New or unknown condition

The pump will always operate at the intersection of the pump and system curves.

Pumps in series: Use for high head situations. GPM as with single pump / head doubles for equal-size pumps

Pumps in parallel: Use for high flow situations. GPM doubles for equal-size pumps / head as with single pump

Pump Affinity Laws:

$$\frac{Q_2}{Q_1} = \frac{RPM_2}{RPM_1} = \frac{Diam_2}{Diam_1}$$

$$\frac{H_2}{H_1} = \left[\frac{Q_2}{Q_1}\right]^2 = \left[\frac{RPM_2}{RPM_1}\right]^2 = \left[\frac{Diam_2}{Diam_1}\right]^2$$

$$\frac{BHP_2}{BHP_1} = \left[\frac{Q_2}{Q_1}\right]^3 = \left[\frac{RPM_2}{RPM_1}\right]^3 = \left[\frac{Diam_2}{Diam_1}\right]^3$$

COMPARING SYSTEMS

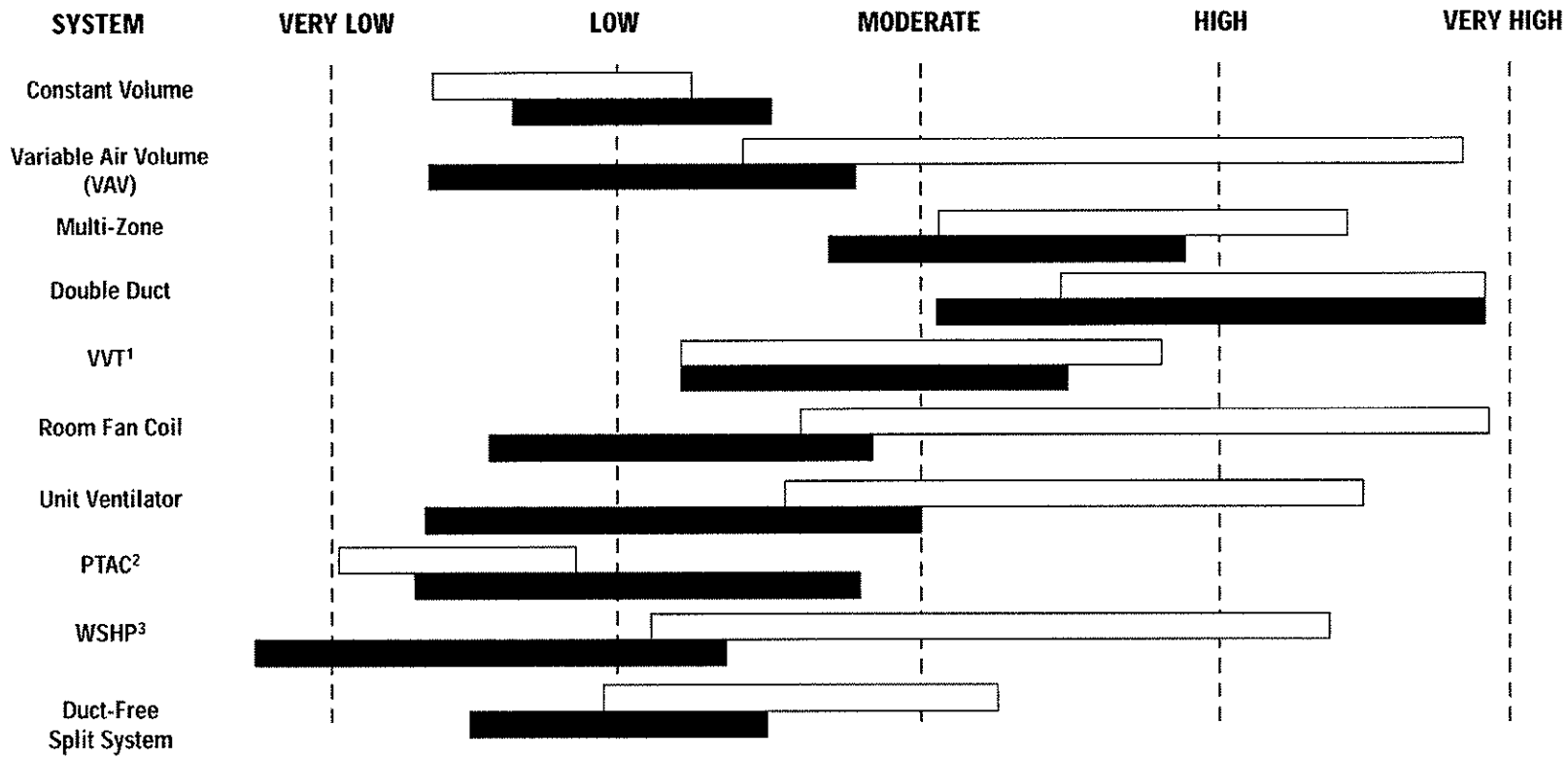

1 Variable Volume, Variable Temperature, also known as VAV Bypass; a zoning damper system which delivers variable volume, variable temperature air to zones using a constant-volume unit and a central modulating bypass air damper.

2 Packaged Terminal Air Conditioners

3 Water-Source Heat Pump – California Loop

Energy consumption is based on annual operating cost, not life cycle cost.

Since installed and operating costs are so sensitive to utility costs, weather patterns, building type, usage patterns, labor rates, date, prevailing codes, and so forth, generic dollar/sq. ft. figures usually cover so broad a range that they become meaningless. Actual job decisions are often made on much finer cost distinctions between systems. Therefore, without knowing the specifics of a particular job, a relative cost comparison is much more helpful from a generic viewpoint.

END OF THIS SECTION

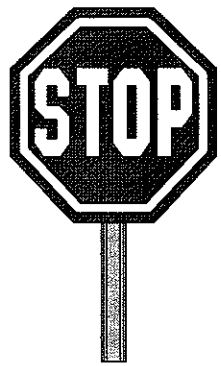

WATER COILS

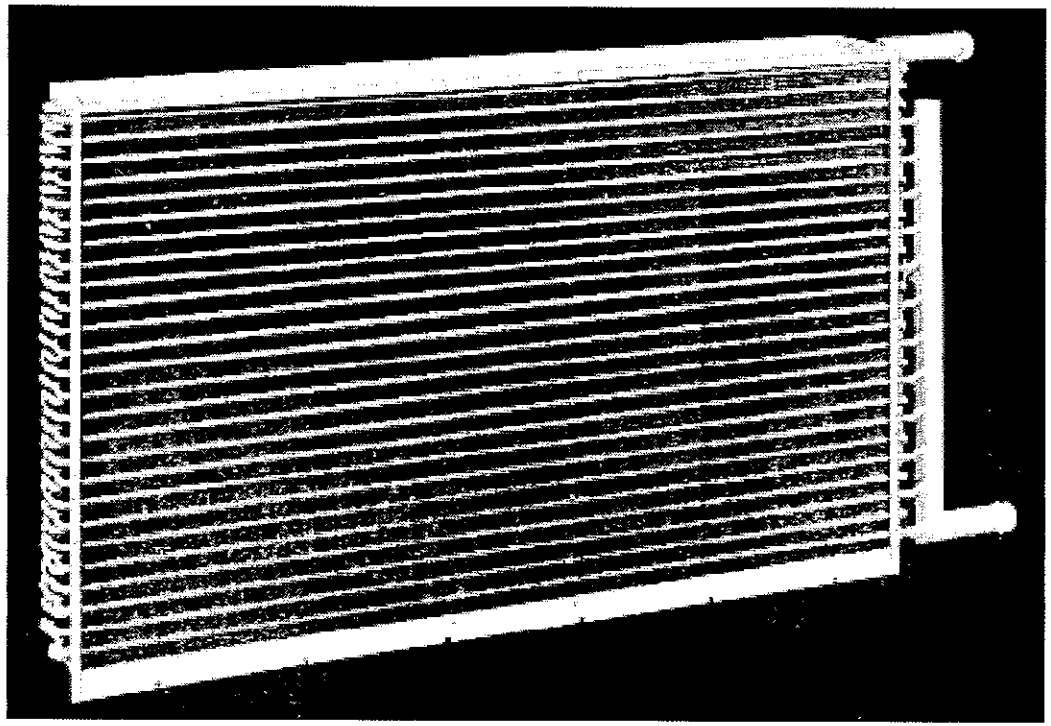

DES700

APPLIED WATER SYSTEM DESIGN

OBJECTIVES

Since this course is devoted to the design of a Chilled Water System for a multi-story building, the understanding of water coils is essential. Therefore, when you complete this section of the course you will be able to:

1- Understand Coil Construction and Standard Terms
2- Be able to Predict the Impact of Circuiting on
    - Coil Costs
    - Coil GPM
    - Tube Velocity
    - Coil Pressure Drop
3- Understand the Coil Heat Transfer Process
    - Heat given up by the air to the coil
    - Heat transferred from the air to the water
    - Log mean temperature difference
    - Heat absorbed by the water
4- Understand the Coil Flow versus Heat Capacity Relationship
5- Be able to Decide on Design Water Temperatures

OBJECTIVES

- Understand coil construction and standard terms
- Be able to predict the impact of circuiting on:
  - Coil costs
  - Coil GPM
  - Tube velocity
  - Coil pressure drop
- Understand the coil heat transfer process
  - Heat given up by the air to the coil
  - Heat transferred from the air to the water
  - Log mean temperature difference
  - Heat absorbed by the water
- Understand the coil flow versus heat capacity relationship
- Be able to decide on design water temperatures

INTRODUCTION

Water coils are used in air conditioning in two types of equipment - Room Fan Coil Units and Central Air Handlers. Both products are basically a series of coils with a fan which blows air over the coils for the purpose of cooling or heating the air.

INTRODUCTION

- **Water coils are used in two products like these:**

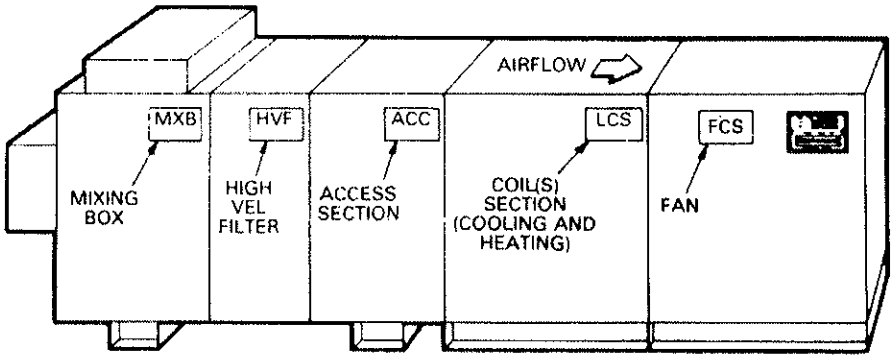

HORIZONTAL DRAW-THRU

Central Station Air Handling Units

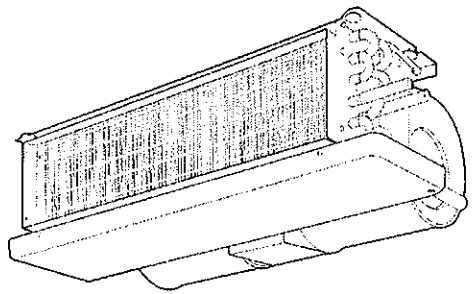

42CA HORIZONTAL

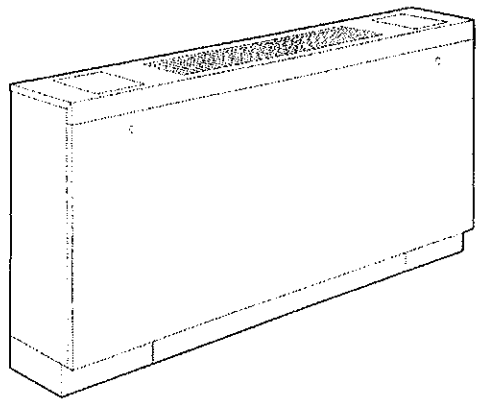

Unit Ventilators & Room Fan Coil Units

COIL STRUCTURE

The photo below shows a typical coil used in a central station air handler. The coil is enclosed in a **casing** with **supply and return headers** located on one end of the coil.

The **face area** of a coil is defined as the area where the finned tubing is exposed to the flow of air. In the photo below it would be "A" multiplied by "B" and expressed in square feet.

The tubes of a coil are arranged in **rows**. The number of tubes in the first row of the coil is called the **tube face**. The tube face in the cutout photo below would be four.

The tubes pass through the coil casing at each end. These end plates are called **tube sheets**. The tube sheets provide structural support for the coil tubes and also serves as part of the overall coil casing. The entire assembly of tubes and casing is sometimes referred to as the **tube bundle**.

Coils have a schedule 40 pipe **header** that supplies water to the tube bundle, and a similar return header to collect water that has passed through the tube bundle. Most manufacturers require the purchaser to specify which end of the coil the headers are to be located on.

Water coils are typically supplied at the bottom and returned at the top. This is done to help air bubbles float up to the top of the coil return header and accumulate. Air vents are located at the top of both supply and return headers to facilitate the removal of air when the system is being filled with water.

Central station air handling units have coils which can be ordered in several depths, fin spacings and circuits. On the other hand, packaged chilled water air handlers, unit ventilators, room fan coils and conduit induction terminals come with a standard coil which is not selectable.

COIL STRUCTURE

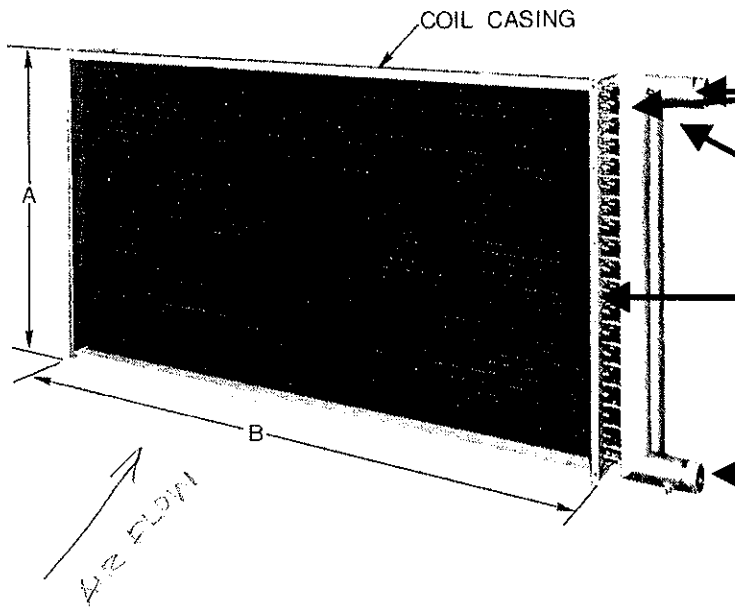

Coil Face Area = A x B (sqft)

Air Vents at Top of Headers

Return Header (Right Hand)

Tube Sheet (Holds Tubes in Place)

Supply Header (Right Hand)

- Tubes are arranged in rows
- Tube Face = The number of tubes in the first row
- Tubes and casing assembly called tube bundle
- Supply in at bottom & out at top to eliminate air from coil

COIL SURFACE TYPES

Air treatment coils are divided into prime surface and extended surface types.

Prime surface coils are rarely used on comfort air conditioning applications. The tubes are constructed of bare tubes. The bare tubes are primarily used where a solution may deposit solids on the outside of the coil over a period of time. The prime surface make tube cleaning much easier. Evaporative condensers are an example of the use of prime surface tubes.

Extended surface coils are typically used in air conditioning. The "effective" heat transfer surface area is extended (increased) by mechanically attaching thin sheets of metal (fins) to the tubes. This increase in area significantly enhances heat transfer between the tube and the air passing over the tubes. This results in compact equipment with economy of materials and space.

Finning Methods:
Two types of coil fins are used - **spiral and plate-fin**. The left hand picture below shows a tube with spiral fins. The individual tubes are then assembled into a coil.

Plate-fin material, on the other hand, is produced in sheets with holes stamped out where tubes pass through. The bottom right picture shows a sheet of plate-fin material for a four row coil. Tubes are inserted in the holes of a stack of finned sheets. The tubes are then expanded mechanically from the inside to form a solid connection with the fin material.

Fin spacing along the length of the tube is designated by the number of fins per inch. 8 and 14 fins per inch are popular offerings in the market place for central air handling equipment.

Aluminum and copper are the most popular materials for both the tubes and the fins on cooling coils used for comfort applications.

Aluminum tubes with aluminum fins have been used successfully for residential cooling coils and for some small capacity commercial equipment. **Copper tubes with aluminum fins**, however, dominate the commercial equipment market.

Copper fins on copper tubes is more expensive, but it is used on some corrosive applications in industrial process applications.

Other materials are available from specialty manufacturers where standard coil offerings are not suitable.

TWO TYPES OF COIL FINS

- **Spiral fin** is wound on a tube
- Tubes then assembled into coils

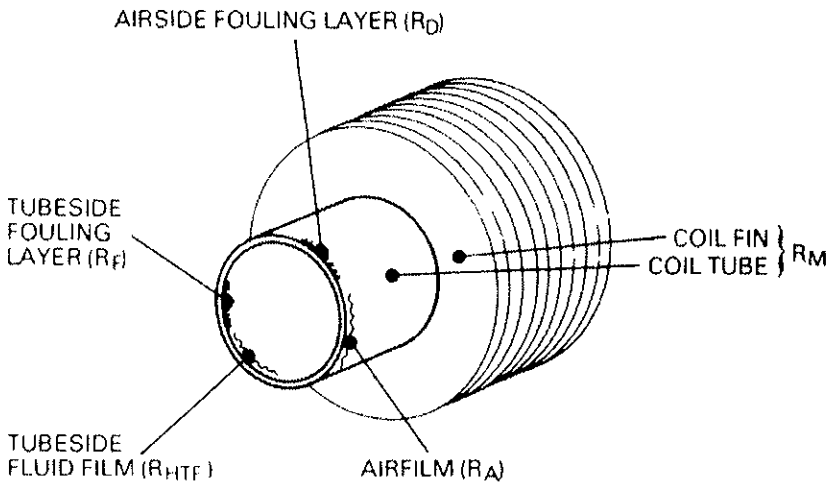

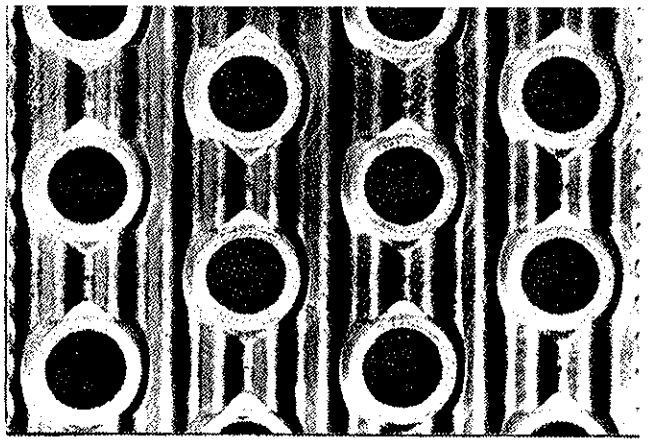

- **Plate-fin** material for a four row coil
- Tubes are inserted and expanded mechanically from the inside
- 8 and 14 fins per inch
- Normally copper tube with aluminum fin

CIRCUITING

Water flows through the tubes from one end of the coil to the other. At the far end of the tubes, "U" shaped return bends are installed to turn the water 180 degrees and direct the water back the opposite way across the coil. Each traverse of the coil in this manner is called a "pass".

The "U" shaped return bends can be arranged in several ways to alter the number of passes the water makes before leaving the coil. The path traveled by the water along a tube from the inlet header to the outlet header is called a circuit. Many circuits can be arranged in parallel to accommodate the coil's heat transfer capacity. By varying the return bend arrangements, several circuiting types may be provided for the same tube bundle.

The next several diagrams illustrate how circuits are provided for a four row coil. In each figure the coil will be viewed from the coil connection end where the supply and return headers are located. Lines interconnecting tubes represent return bends on the reader's end of the coil, while dotted lines represent return bends on the the far end of the coil. In each case, the water and air are in a counterflow configuration, relative to each other. That is, the water enters the coil at the leaving air end of the circuit and leaves the coil at the entering air end.

Full Circuiting:
Water is fed into each tube in the 4th (last) row. The water passes through the coil four times in each circuit and then exits into the return header. The full circuiting arrangement provided 8 circuits for this 8 tube face coil.

Half Circuiting:
Every other tube in the tube face is fed with water. The water now makes 8 passes through the coil - traveling twice as far as in a full circuit coil. The number of circuits is now 4.

Quarter Circuiting:
Each 4th tube in the last row is fed with water. Each of the two circuits now pass 16 times through the coil - four times that of a full circuit coil.

Double Circuiting:
Each tube in the last two rows is fed with water from the supply header. 16 circuits make two passes through the coil before entering the return header.

CIRCUITING

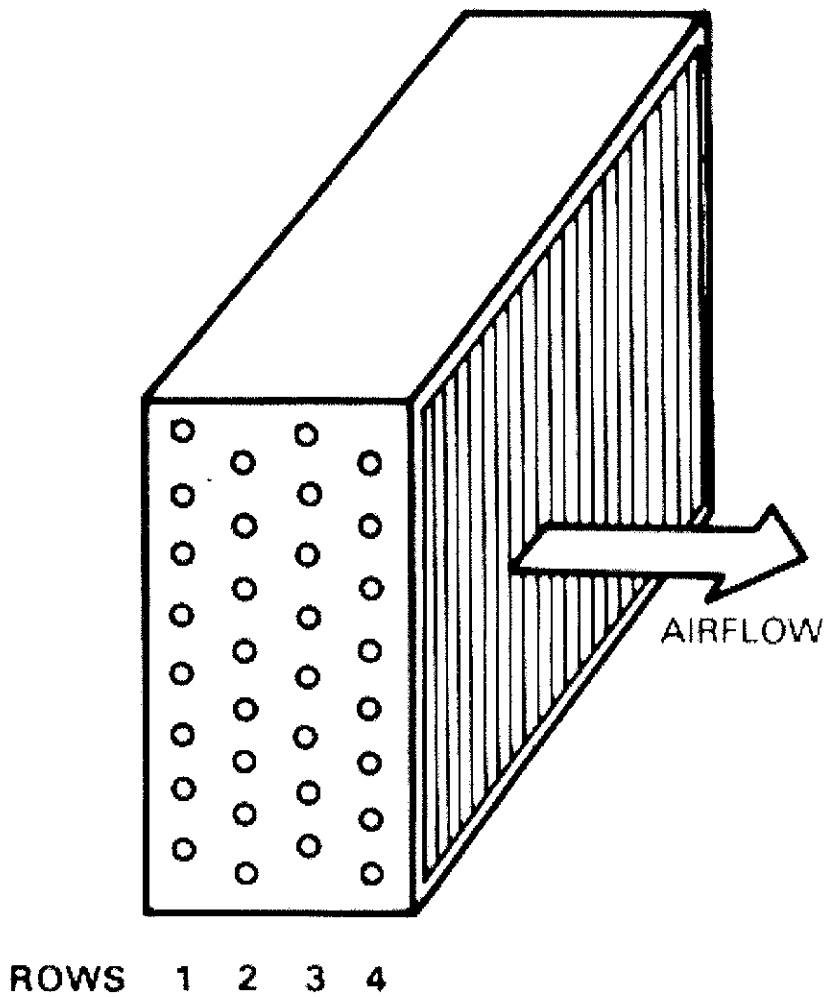

- **Given a coil tube bundle with four rows of tubes**

FULL CIRCUIT COIL

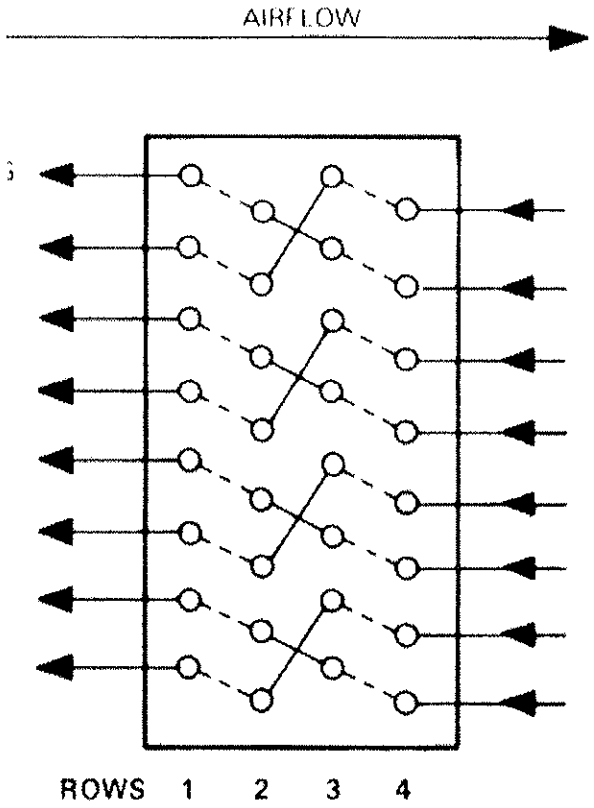

- 4 row coil
- Water flow counter to air flow
- Supply and return headers on same end
- 8 tube face coil
- 8 circuits from supply header
- Each circuit passes through the coil 4 times
- All 8 circuits collect in the return header

HALF CIRCUIT COIL

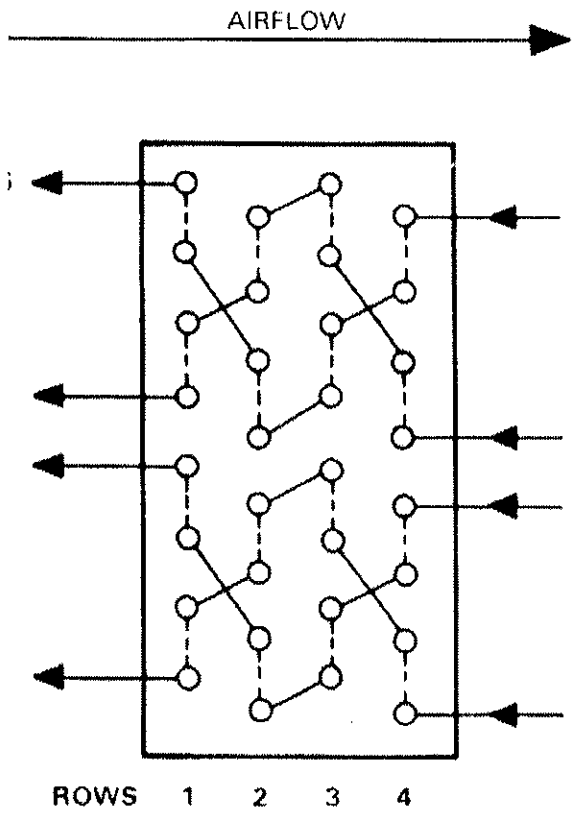

- 4 row coil
- Water flow counter to air flow
- Supply and return headers on same end
- 8 tube face coil
- 4 circuits from supply header
- Each circuit passes through the coil 8 times
- All 4 circuits collect in the return header

QUARTER CIRCUIT COIL

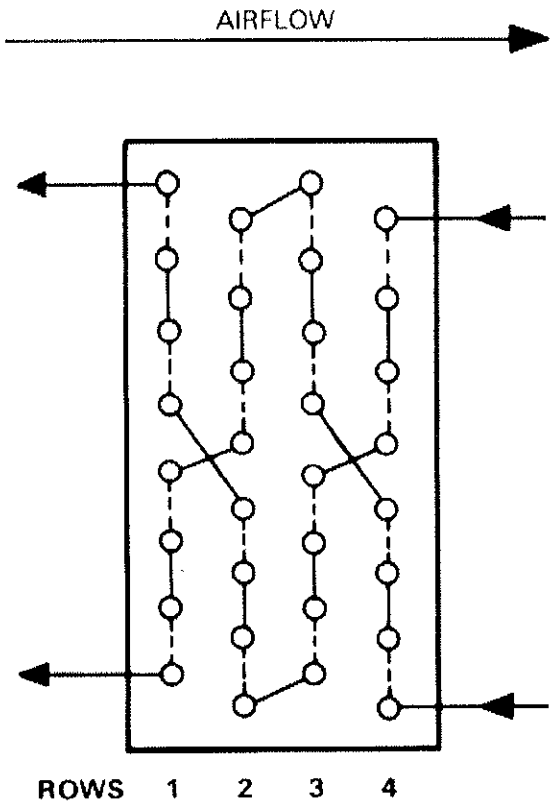

- 4 row coil
- Water flow counter to air flow
- Supply and return headers on same end
- 8 tube face coil
- 2 circuits from supply header
- Each circuit passes through the coil 16 times
- All 2 circuits collect in the return header

DOUBLE CIRCUIT COIL

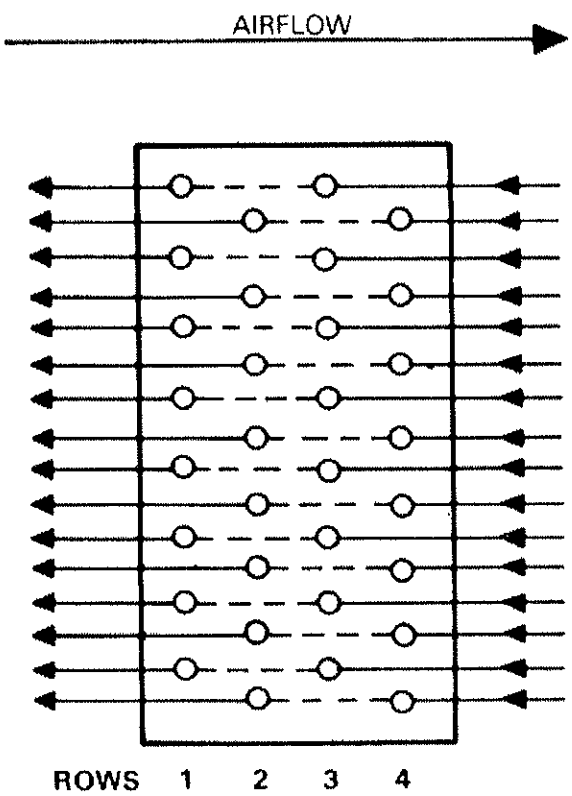

- 4 row coil
- Water flow counter to air flow
- Supply and return headers on same end
- 8 tube face coil
- Last two rows fed
- 16 circuits from supply header
- Each circuit passes through the coil 2 times
- All 16 circuits collect in the return header

CIRCUITING TRENDS

In general, for a given heat transfer rate, the greater the distance traveled through the coil by the water, the lower will be the required water flow rate. Another way of saying this would be that lower flow rates are associated with fewer circuits. Each pound of water flowing through the tubes of a long circuit will absorb more heat than it would in a short circuit.

Longer circuits tend to have higher velocities, higher pressure drops and higher heat transfer ("U") factors.

In practice, more than one type of circuiting will satisfy the job at hand. The final coil selection is a matter of picking a circuit configuration that satisfies the load with a reasonable pressure drop, lowest cost, and good control range.

Listed on the page after the one below are the coil selection options arranged from most expensive to least expensive.

1- Face Area: This frequently also identifies the cabinet size of the air handler.

2- Rows

3- Fins per Inch

4- Coil Circuiting

Note: While a change from a 4 row to a 6 row coil usually costs less than increasing the air handler cabinet size; a change from a 4 row to a 8 row coil may cost as much or more than increasing the air handler cabinet size.

CIRCUITING TRENDS

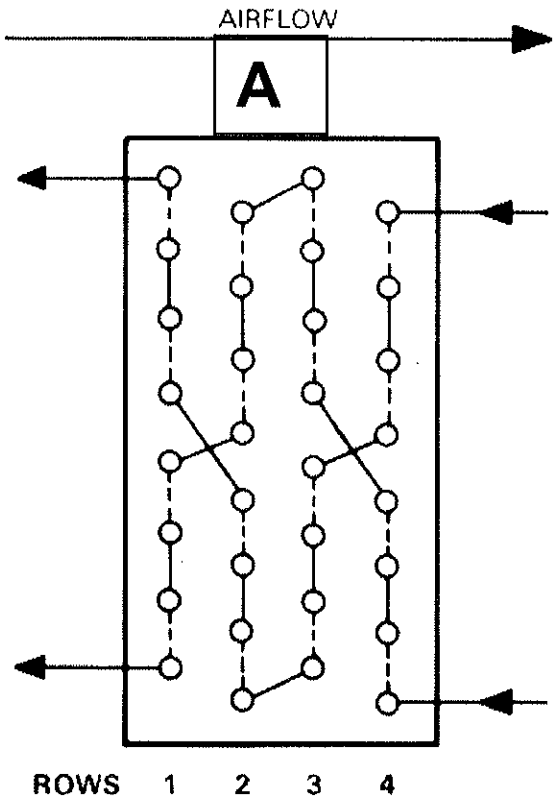

GPM: A < B

Tube Velocity:
A > B

Pressure Drop:
A > B

More than one circuit will satisfy job

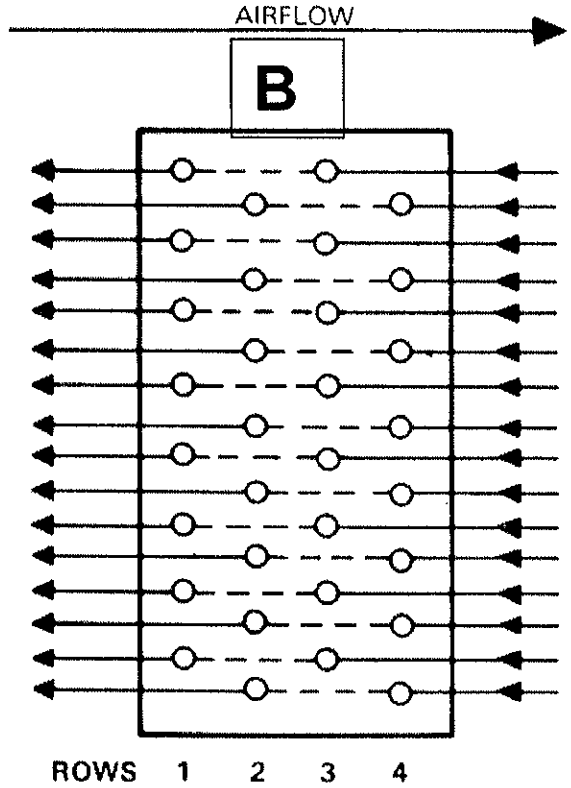

Pick circuit that meets capacity, meets pressure drop limits, affords lowest cost, and gives good control range

COST TRENDS

- Air Handler Selection Options:
- (Highest to lowest cost trend):
  - Face Area (This is frequently also the size of the air handler cabinet)
  - Costs the most to increase
  - Rows
  - Fins per inch
  - Coil circuiting
  - Costs the least to increase
- Note:
  - Changing from a 4 row to 6 row usually costs less than increasing the air handler cabinet size
  - Changing from a 4 row to 8 row may costs more than increasing the air handler cabinet size



COIL SPLITS

Normally, one chilled water coil is sufficient to handle the capacity in an air handling unit. However, in larger size air handlers, the coil may be "split" into smaller coils for economic reasons. The splits will be piped in parallel and flow modulated to both coils simultaneously for control reasons.

Split coils are used in direct expansion systems in order to deactivate part of the coil face and keep refrigerant velocities up at part load. This phenomenon is not necessary in chilled water coils.

COIL SPLITS

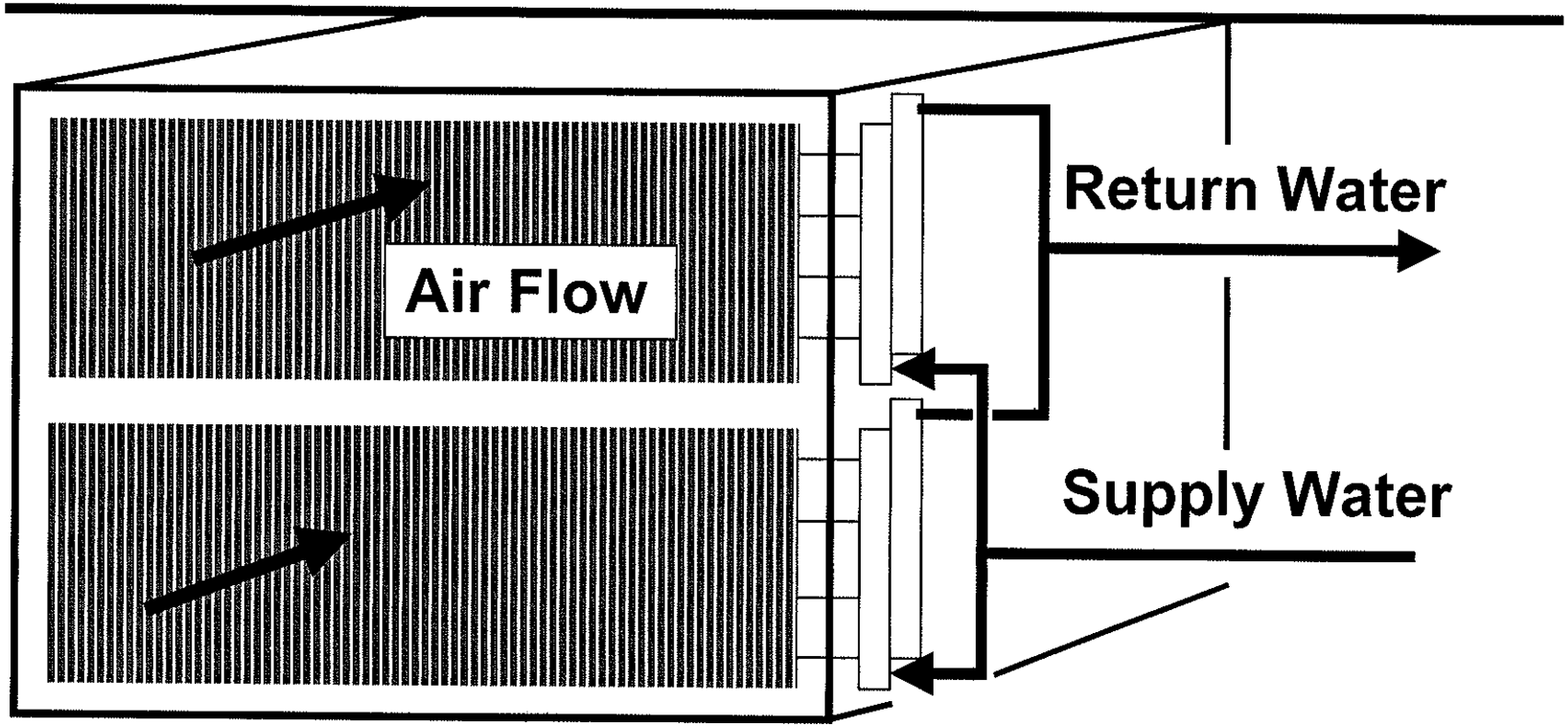

- Two vertical chilled water coils shown above
- Parallel water piping
- One control valve

COIL PERFORMANCE

Chilled water and hot water coils (steam coils as well) are normally applied in a counterflow heat transfer manner. The water flows through the coil in a direction opposite the air flow.

For a chilled water coil, the coldest water entering the coil comes in contact with the coldest air leaving the coil. This provides the most effective heat transfer and also the lowest average coil surface temperature for humidity removal. Unlike hot water coils, chilled water coils have a latent component as well as a sensible component. As the air enters the coil, the first rows do sensible cooling - driving the air temperature toward its dewpoint. The last rows cool the air below its dewpoint and remove unwanted moisture.

COIL PERFORMANCE

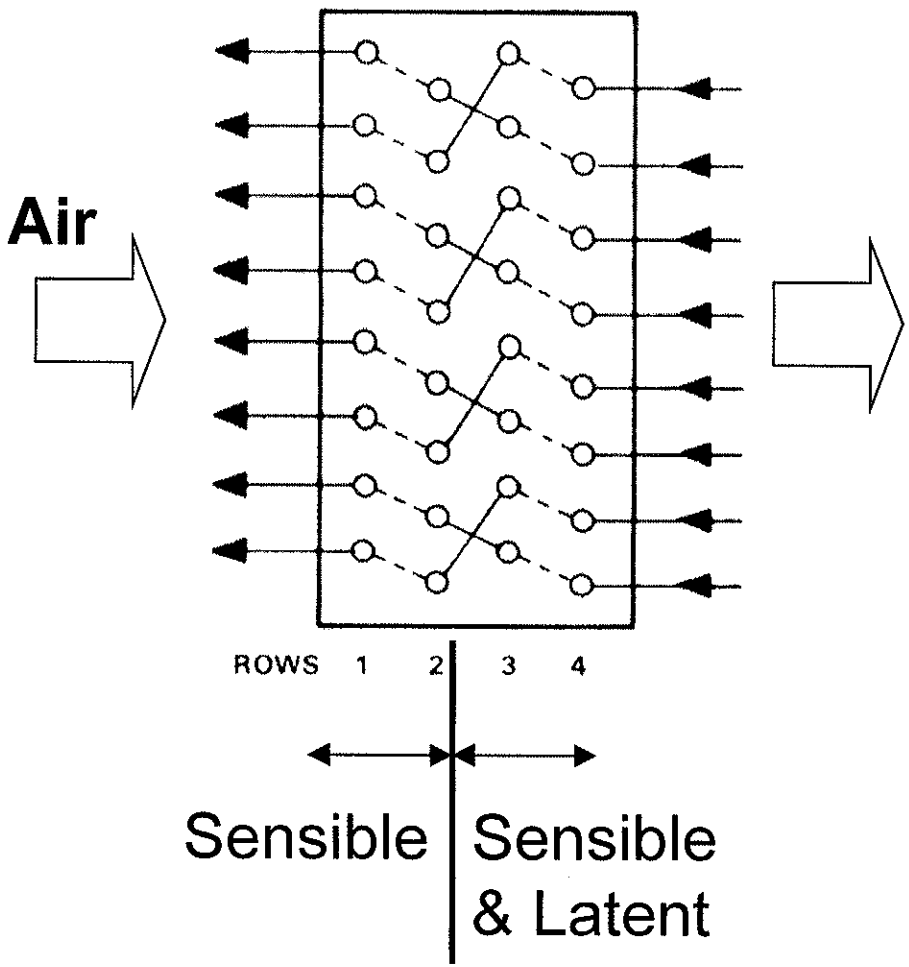

- Counterflow is normal arrangement
- Air & water flow in opposite directions
- Cooling coil does sensible & latent cooling
- First rows: sensible
- Last rows: sensible & latent
- Coldest water entering last rows assures maximum latent capacity and maintains Δt between water and air

HEAT GIVEN UP BY AIR

For the air passing over a chilled water coil, there are two aspects of heat being given up by the air:
1- Sensible cooling
2- Latent cooling

Let's take a look at the equations that govern each of the heat exchanges.

The **total heat** given up by the air can be calculated by the change in the air's enthalpy as follows:

Q_T = 4.5 x cfm x (h_E - h_L) where:
Q_T = Total heat transferred in Btuh
4.5 = Air constant. This converts standard air (70F and sea level) from volumetric flow (cfm) to mass flow (lb/hr)
cfm = Cubic feet per minute of standard air
h_L = Air leaving enthalpy (btu/lb)
h_E = Air entering enthalpy (btu/lb)

The **sensible portion** of the heat given up by the the air can be calculated by the change in the air's temperature as follows:

Q_S = 1.10 x cfm (t_E - t_L) where:
Q_S = Sensible heat exchanged from the air to the coil (Btuh)
1.10 = ASHRAE standard conversion factor. This converts standard air (70F and sea level) from volumetric flow (cfm) to mass flow (lb/hr)
cfm = Cubic feet per minute of standard air
t_E = Temperature (F) of air entering coil
t_L = Temperature (F) of air leaving coil

The **latent portion** of the heat given up by the air can be calculated by the change in the air's moisture level as follows:

Q_L = 0.69 x cfm (GR_E - GR_L) where:
Q_L = Latent heat exchanged from the air to the coil (Btuh)
0.69 = ASHRAE standard conversion factor. This converts standard air (70F and sea level) from volumetric flow (cfm) to mass flow (lb/hr), and converts grains to pounds of moisture.
cfm = Cubic feet per minute of standard air
GR_E = Grains per lb of dry air of air entering coil
GR_L = Grains per pound of dry air of air leaving coil

The above three equations come from the study of applied psychrometrics during the first week of this design course. For further detail, review the material presented in applied psychrometrics.

HEAT GIVEN UP BY AIR

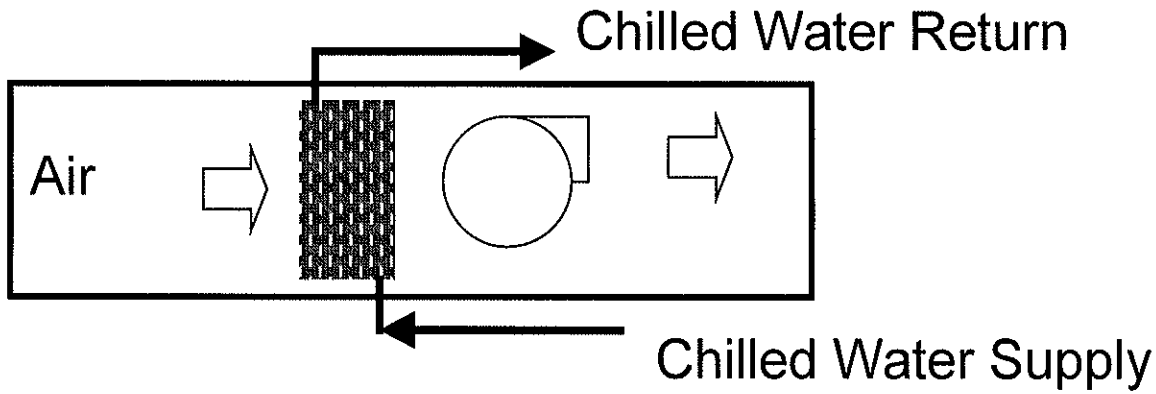

- **Standard Psychrometric Formulae cover the heat given up by the air in this process:**
- **Total Heat Transferred (Change in Enthalpy):**
  - $Q_T = 4.5 \times cfm \times (h_E - h_L)$
- **Sensible Heat Transferred (Change in Temperature):**
  - $Q_S = 1.10 \times cfm\ (t_E - t_L)$
- **Latent Heat Transferred (Change in Moisture):**
  - $Q_L = 0.69 \times cfm\ (GR_E - GR_L)$

HEAT TRANSFER: AIR TO WATER

The heat exchange from the air to the water (passing through the coil) can be determined by the following equation:

Q_T = U x A x LMTD where:
U = $1 / (R_A + R_D + R_M + R_F + R_{HTF})$
A = Total Coil Effective Surface Area
LMTD = Log Mean Temperature Difference Between the Air and Water

The above formula is somewhat oversimplified, because it ignores the fact that part of the coil is wet and part is dry. Where the surface is wet, heat exchange progresses more rapidly than on the dry coil surface. The wet and dry portions must be rated separately and the overall U adjusted to reflect their combined effects. For more detail see ARI standard 410-72. The simplified equation above will suffice for a working understanding of water coils.

The heat transfer coefficient (U) is the inverse of the resistive elements met by the heat as it flows from the air to the water. They are in order as follows:

1- Resistance of the air film
2- Resistance due to dirt on the outside of the tubes and fins.
3- Resistance of the metal fins and tubes
4- Resistance due to water fouling on inside of tube surface
5- Resistance of the heat transfer fluid (water) film adhering to the inside of the tubes.

Thus, from an overall perspective, anything the designer can do to reduce any of the five resistances will improve the overall heat transfer of a coil.

The air film resistance decreases with air side velocity. The dirt resistance can be minimized by proper filtration and coil cleaning. The water film resistance decreases when tube velocity increases. Conversely, it increases as tube velocity decreases. At about 1 foot per second tube velocity, laminar water flow develops and heat transfer becomes poor and unpredictable.

Tube side fouling in chilled water coils is caused by corrosion that comes from particles or air bubbles flowing through the tubes, and by particle deposits that adhere to the tubes surface. Proper filtration, chemical treatment, and venting can minimize this impact.

HEAT TRANSFER: AIR TO WATER

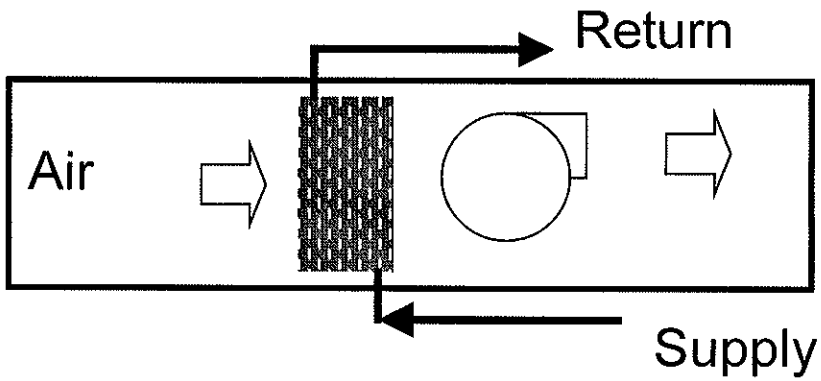

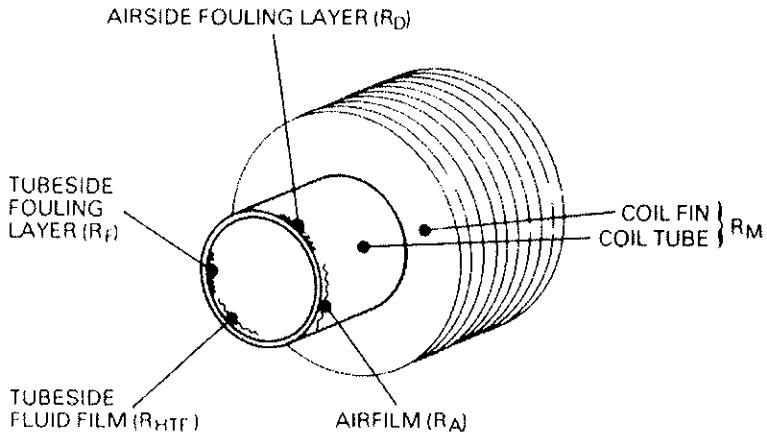

LAYERS OF HEAT TRANSFER RESISTANCE
ON A TYPICAL AIR COOLING COIL

- **Heat must pass through several types of resistance as it moves from the air to the water**
- **Q_T = U x A x LMTD where:**
  - **U = 1 / (R_A + R_D + R_M + R_F + R_{HTF})**
  - **A = Total Coil Effective Surface Area**
  - **LMTD = Log Mean Temperature Difference between the air and water**

LOG MEAN TEMPERATURE DIFFERENCE

The log mean (and not the arithmetic mean) temperature difference is required because the air temperature and water temperature are changing as they flow through the coil. The temperature difference at any one point in the coil is different than any other point. The figure below is a plot of this process.

The air and water flow through the coil in a counterflow manner - in opposite directions. The most heat transfer takes place where the temperature difference is the greatest - that being on the air entering side of the coil. However, the last rows do an increasing percent of latent cooling. The first row of the coil absorbs the greatest amount of heat. Each additional row absorbs less than the row immediately preceding it. Looking at the change in air temperature for each row shown in the figure below , is indicative of the amount of heat each row absorbs. This is summarized as follows:

Row	air Δ T	% Total Heat
1	9.0	41
2	6	27
3	4.3	20
4	2.7	12

LOG MEAN TEMPERATURE DIFFERENCE

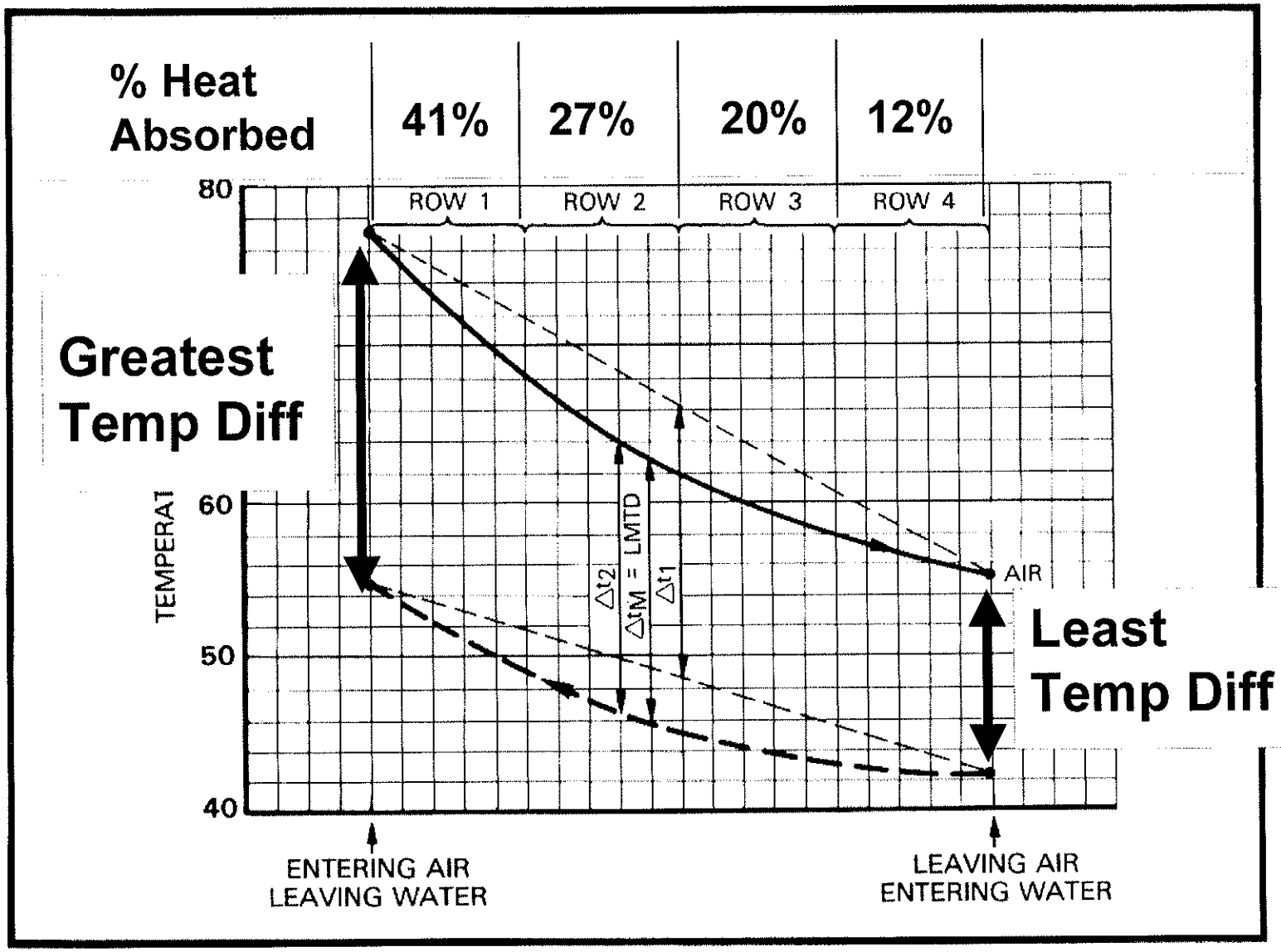

HEAT ABSORBED BY WATER

Obviously the heat given off by the air is the same as the heat that flows from the air to the water, is the same as the heat absorbed by the water. Heat absorption of the water can be calculated as follows:

Q = 500 x gpm x Rise where:

Q = The total heat absorbed by the water (Btuh)
500 = 60 min/hr x 8.33 lb/gal x specific heat of 1.0
gpm = Gallons per minute
Rise = The water temperature increase as it flows through the coil.

HEAT ABSORBED BY WATER

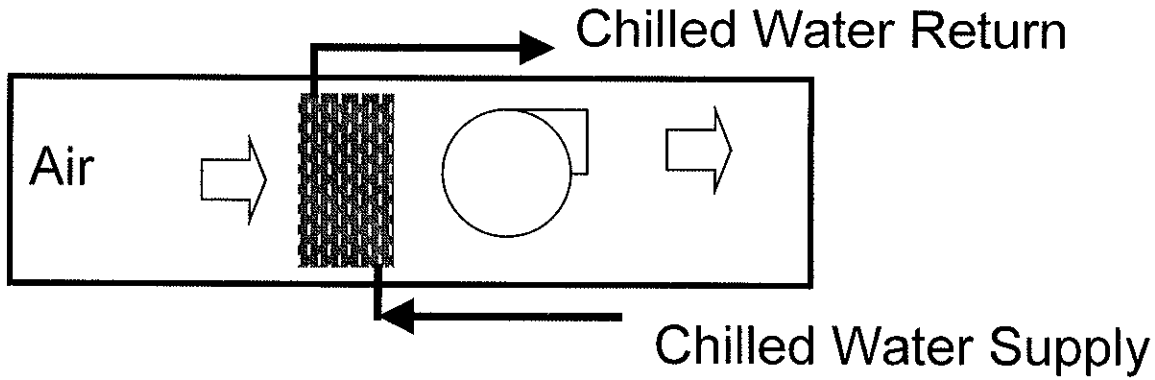

- **Heat absorbed by the water can be calculated as follows:**

  Q = 500 x gpm x Rise where:

  Q = The total heat absorbed by the water (Btuh)

  500 = 60 min/hr x 8.33 lb/gal x specific heat of 1.0 Btu/lb-F

  gpm = Gallons per minute

  Rise = The water temperature increase as it flows through the coil.

% DESIGN FLOW VS. CAPACITY

When plotted against % design flow, a water coil has a non-linear characteristic. A small % increase in flow through the coil results in a proportionately larger percent increase of coil capacity.

This pattern can be observed for both heating and cooling coils. Although this tendency is greater with a chilled water coil, it is also true at a lesser extent for a hot water or steam coil.

Note that a hot water coil with a 20F drop produces 90% of its capacity when the design flow is reduced from full flow to 50% flow. Dropping the flow to 10% still results in a coil capacity around 45%.

In hot water coils, the non-linearity can be reduced by using higher design temperature drops across the coil. This can be seen by reviewing the curve for a 60F drop.

Generally speaking, the greater the change in water temperature (i.e. the higher the temperature), the flatter the curve gets. With steam, it is nearly flat.

The chilled water coil has a similar characteristic. The graph on the right shows that capacity is 100% sensible up to about 25% water flow. Latent capacity gradually increases from 25% to 100% water flow. On the other hand, at 20% flow, the coil still produces 40% sensible capacity.

The characteristic performance of a water coil is important to be aware of when the selection of control valves is considered. It is desirable, from a controls viewpoint, to have a linear performance curve. Even though the curve for water coils is non-linear, it is possible to compensate for non-linear performance by applying the proper type of control valve.

% DESIGN FLOW VS. CAPACITY

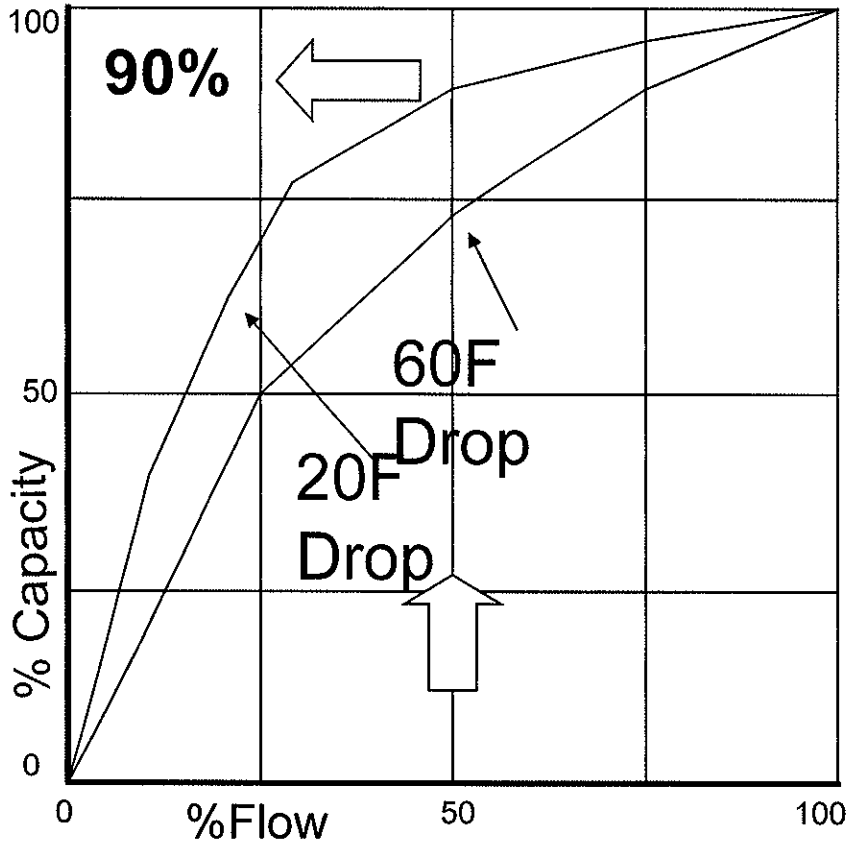

Hot Water Coil

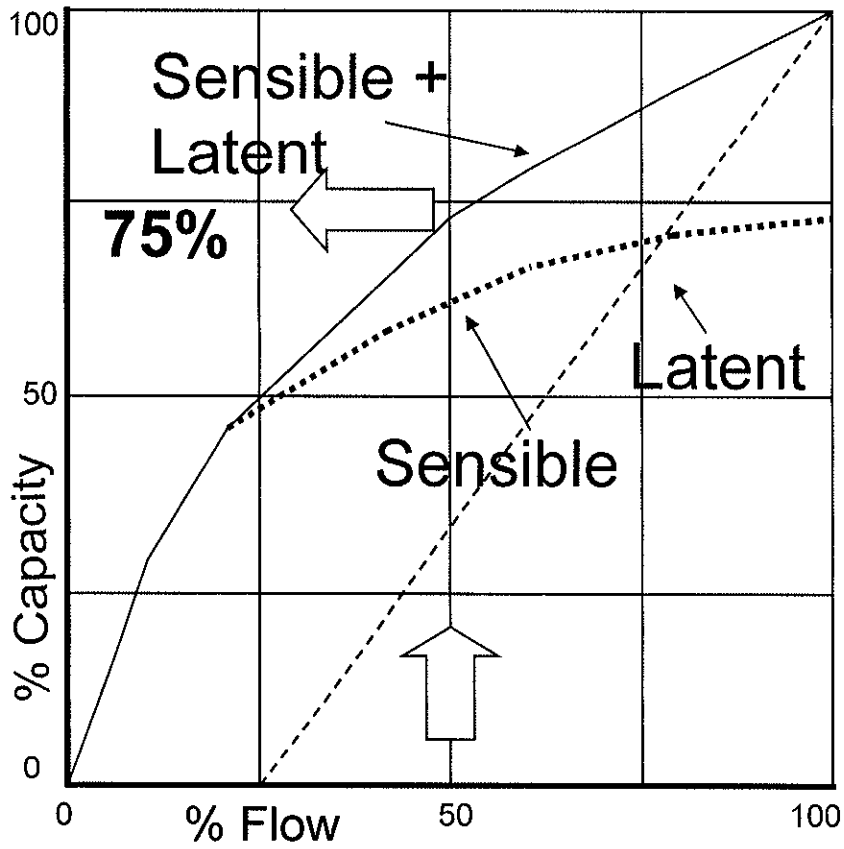

Chilled Water Coil

- Both hot and chilled water coils have non-linear performance
- Good control valve selection can compensate for some of this

DESIGN WATER TEMPERATURES

In the pages that follow, we will explore the heat transfer process that takes place in a Chilled Water and Hydronic Heating System. Let's begin by looking at the design temperatures ranges for chilled water and hot water.

Chilled Water:

The range of chilled water temperatures to be used in a system is dictated by the psychrometrics of the application, and the inherent nature of the heat transfer that occurs in a chilled water coil. The typical indoor design conditions for a commercial air conditioning system are 75F room dry bulb and 50% room relative humidity. If we plot this on a psychrometric chart (see below), this corresponds to a dewpoint of 55F. Since the water flowing through a chilled water coil determiones the coil surface temperature, and the coil surface temperature must be below the dewpoint, the 55F dewpoint sets the target temperature for the return water temperature. The water leaving the coil should be near or slightly above 55F. This assures that the air will be cooled to its dewpoint as quickly as possible as it flows through the coil. It is unusual to ever see a return water temperature that is higher than 60F.

On the other end of the scale, the lowest practical chilled water supply temperature to the coil is 40F.

Operating a chiller at temperatures below this runs the risk of tube freezing, and results in excessive chiller energy consumption. A typical chilled water supply target is 44F from the chiller.

The range of chilled water temperatures for a typical air conditioning job is between 55F and 40F with the most common temperatures at the chiller being 44F supply to 54F return (a 10F rise across the coil). Since some heat is gained by the water as it flows through the piping system, this becomes 45F supply to the coils and 55F return.

Hot Water:

The ASME Low Pressure Boiler Code established the maximum hot water temperature as 250F, while the space conditions of 75F set the other end of the range. Actually, since some temperature difference must exist between the space and hot water, 80F is more likely the lower end. The range for hot water systems is therefore 250F to 80F. When one considers the economics of pumping and piping it can be reasoned that smaller GPMs result in smaller pipes, smaller pumps, and the lowest pumping energy. Therefore, pumping systems favor the maximum possible hot water rise across a coil.

When used for preheat, coil manufacturers recommend a minimum coil entering temperature of 150F. In heating applications it is normal to see entering hot water coil temperatures of 150F to 200F, with 180F being a typical target. For both preheating and heating applications, a large temperature drop across the coil is normally used (20F to 60F), with 30F being a typical target.

DESIGN WATER TEMPERATURES

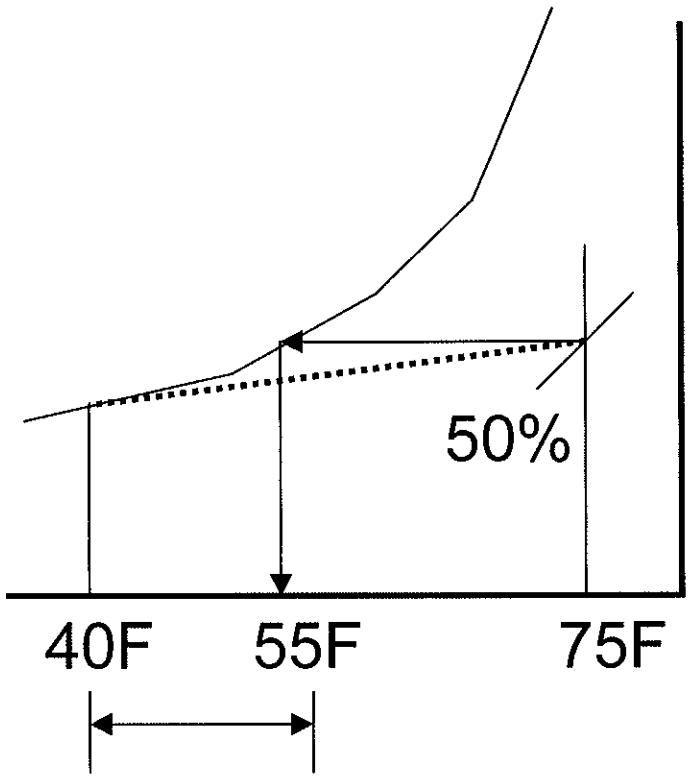

Chilled Water Range

- **Chilled Water Temperature**
  - Room design (75DB, 50% RH)
  - Dewpoint is 55F
  - Return water temp should be 55F or slightly higher (60F max)
  - Entering water: 40F lowest due to chiller freeze protection
  - Typical supply target=45F at coils
  - Range (40F to 60F)
  - Normal applications (45F to 55F)
- **Hot Water Temperature**
  - ASME low pressure boiler code sets 250F as maximum
  - Slightly above room is min (80F)
  - Preheat coil (150F minimum)
  - Heat coil 150F to 200F (180F)
  - Coil drop 20F to 60F (30F)

CHILLED AND HOT WATER DESIGN TEMPERATURES

- **The Design Project will be based on the following design water temperatures:**
  - **Chilled Water 45 deg F**
  - **Hot Water 160 deg F**



QUIZ

- Answer the quiz questions.
- The instructor will then review the answers with you.

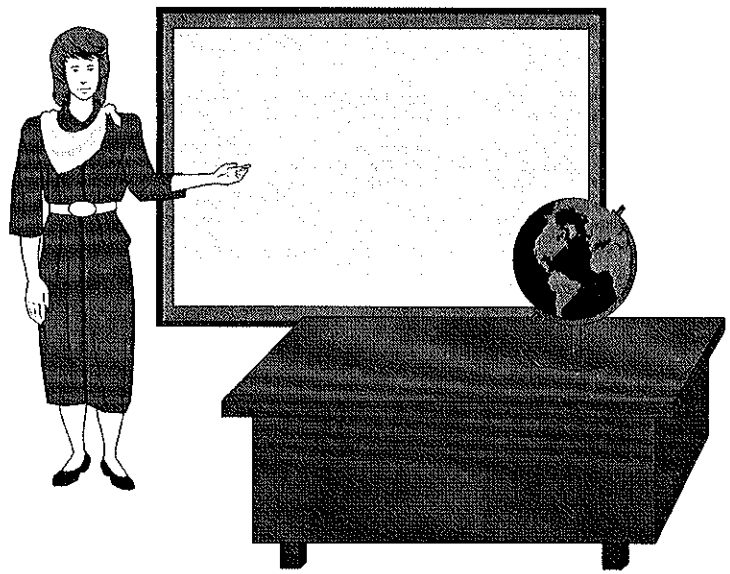

QUIZ

NAME:_____
DATE:_____

1- What does the term "Tube Face" mean?
The number of tubes in the first row of the coil

2- Water is supplied to the (top or bottom) connection? Bottom

3- Name two types of coil fin construction types used:
Spiral fin and Plate fin

4- With a 12 tube face coil, how many circuits would there be with a Half Circuit Arrangement? 6

5- Arrange the Following Parameters From Lowest Cost to Highest Cost (Rows, Face Area, Circuiting, Fins)
Circuiting, Fins, Rows, Face Area.

6- In a 4 row coil, which row, 1st, 2nd, 3rd, or 4th removes approximately 27% of the total coil load? row 2

7- If a chilled water coil is receiving 50% of its design flow, what % of its design capacity is it providing? 73%

8- If a hot water coil with a 20F drop in water temperature is receiving 50% of its design flow, what % of its design capacity is it providing? 90%

END

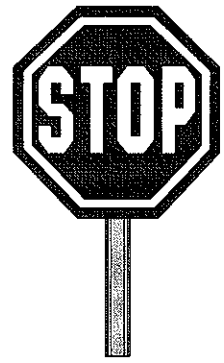

FAN COIL UNITS

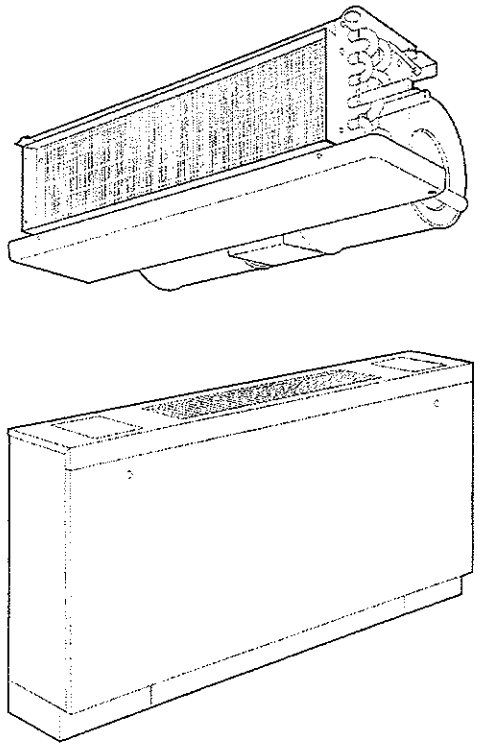

DES700

APPLIED WATER SYSTEM DESIGN

OBJECTIVES

In this section, we will concentrate on the room fan coil terminals - such terminals representing the bulk of the products used to air condition the hotel portion of the design project. When you have completed this section of the class you should be able to:

1- List the basic components in a fan coil unit
2- Understand the control options available and what applications each option serves best
3- Decide how to handle ventilation for a fan coil application
4- Select the proper type of fan coil unit to match an application
5- Select the actual terminal size for a control zone

OBJECTIVES

- Be able to list the basic components in a fan coil unit
- Understand the control options available and what applications each option serves best
- Be able to decide how to handle ventilation for a fan coil application
- Be able to select the proper type of fan coil unit to match an application
- Be able to select the actual terminal size for a control zone

INTRODUCTION

The Room Fan Coil System is basically an all water system that can be used to air condition perimeter spaces of buildings. It is a flexible and economical system that can handle individual building control zones that have reversing load characteristics. In addition, this system requires less space for mechanical equipment throughout the entire building than any other central station air conditioning system and is more easily installed in an existing building than practically any other air conditioning system.

This course session presents a brief discussion of the basic concept of the system, along with a description of both the Two-Pipe Changeover System, the Four-Pipe System, and a Two-Pipe System with supplementary Electric Heat. A list of system characteristics is provided to assist in evaluating the benefits to be realized by the selection and use of the basic system and each of its particular variations.

INTRODUCTION

- An All-water System
- Used on perimeter spaces
- Characteristics:
  - Provides individual zone control
  - Handles spaces with reversing loads
  - Requires minimal mechanical equipment
  - Easily installed in an existing building
- In this session we will cover:
  - Two pipe changeover system
  - Four pipe system
  - Two pipe system with supplementary heat

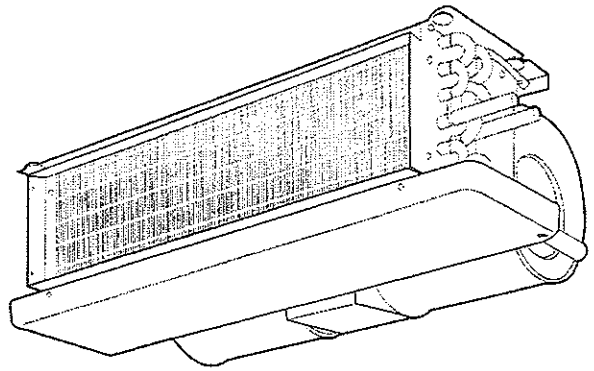

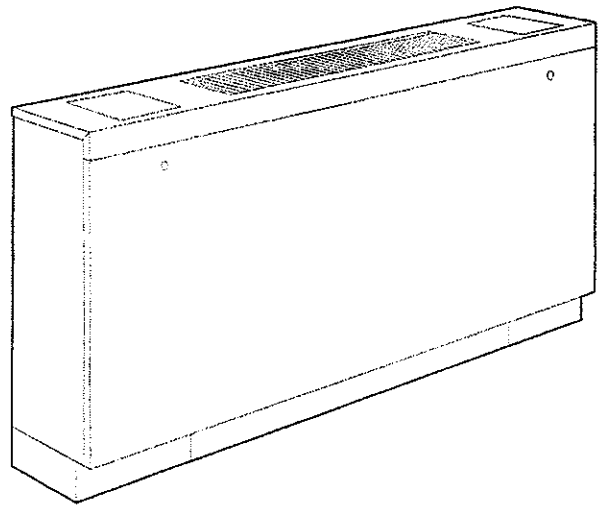

ALL-WATER ROOM FAN COIL SYSTEM DESCRIPTION

The All-Water Room Fan Coil System consists of a Central Station Water Chilling System, room terminals and inter-connecting piping. Some means of heat will also be provided - either room terminal electric heaters or a central steam or hot water boiler.

The size of the application and the cost and availability of the energy source will determine the type of Chilled Water System used. Electric Drive Water Chillers are typically used with Absorption Chillers used when steam is economically and readily available.

ALL-WATER ROOM FAN COIL SYSTEM DESCRIPTION

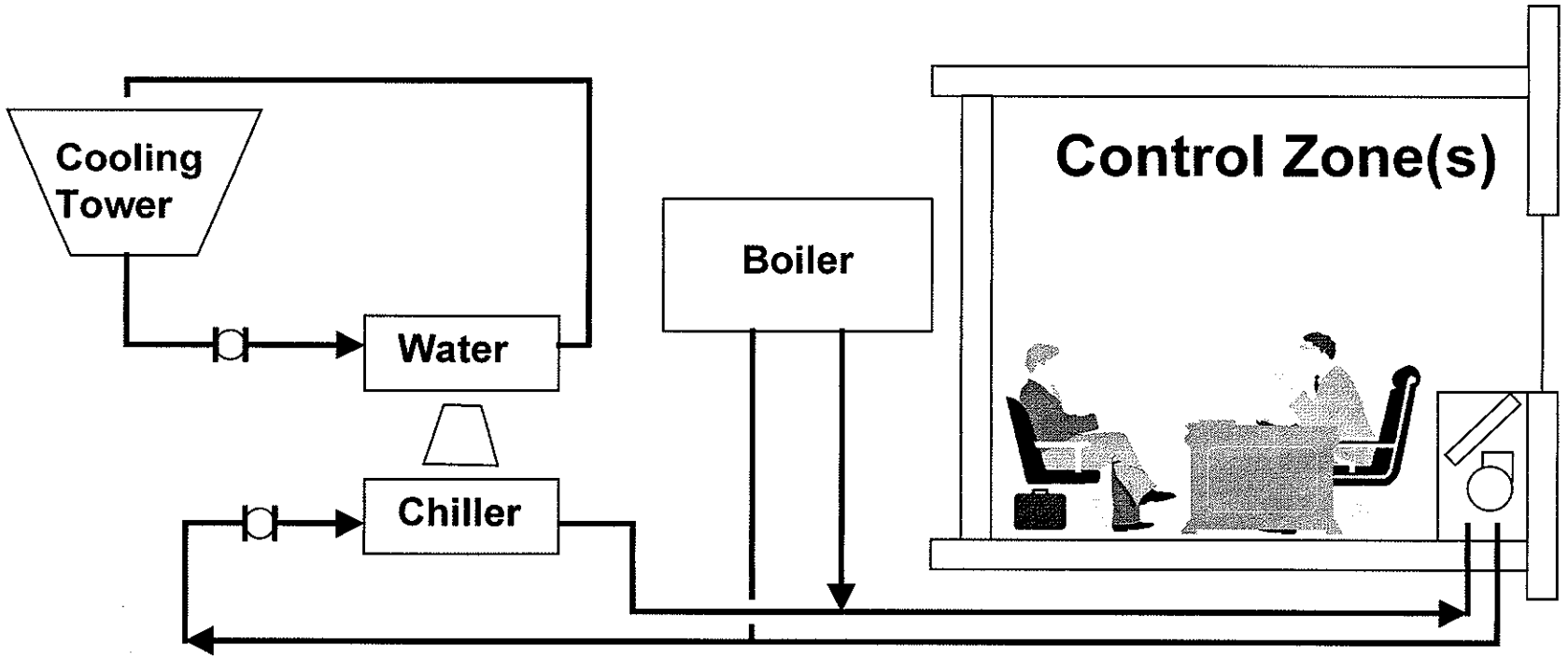

- Central Chilled Water Plant
- Room Fan Coil Terminals
- Water Piping Distribution System
- Source of Heat - Boiler or Room Electric

BASIC FAN COIL UNIT

The basic room fan coil terminal consists of a disposable filter, fan and fan motor, a drain pan,a coil, a valve package, and a room or cabinet thermostat. This basic unit will either be furred in or totally enclosed in a factory or field fabricated enclosure.

The basic unit is designed to be applied in a horizontal or a vertical position. In the vertical unit only (shown below), an optional damper is available if the outdoor air is introduced to the room through the unit by an attached wall box. The vertical unit is used most frequently in office buildings placed under the window. The unit can be furred into the wall (42VA) with only the discharge grill visible (typical school application), or it can be a free standing finished cabinet(42VB). The cabinet model can also be equipped with a slanted discharge grill (42VF). This is a common application in schools to prevent students from blocking the discharge grill with books.

The vertical unit also comes in a "Lowboy" version with a small compact height - resembling a baseboard type unit. This is available as a furred-in model (42VC) or as a free-standing cabinet model (42VE).

The horizontal unit (42C) can be placed above the ceiling, in a corridor or in a closet within the room, and distribute the air to the room from a side wall grille or ceiling diffusers. This unit is used most frequently in apartments and hotels or motels.

The unit can be recessed into a wall (42VG) with a finished cabinet showing. This is a typical hallway application.

A "stack" unit (42S) is available as either a furred-in or free-standing cabinet unit. The stack unit runs floor to ceiling and contains all required piping arranged vertically in the unit. This is ideal for hotels where each floor is a mirror image of the one below and all hotel rooms are similar in size and capacity.

If the application has a large amount of glass and is in an area with a low outdoor winter design condition, it is recommended that the vertical unit be used. This will allow for placement of the unit under the window to prevent serious downdrafts.

The room fan-coil terminals can be equipped with a variety of controls to provide for manual, fully or semi-automatic operation.

BASIC FAN COIL TERMINAL

- Fan and fan motor
- Coil
  - For cooling
  - For heating
- Filter
- Cabinet
- Drain pan and line
- Valve control package
- Room or cabinet thermostat
- Optional outdoor air (O.A.) damper

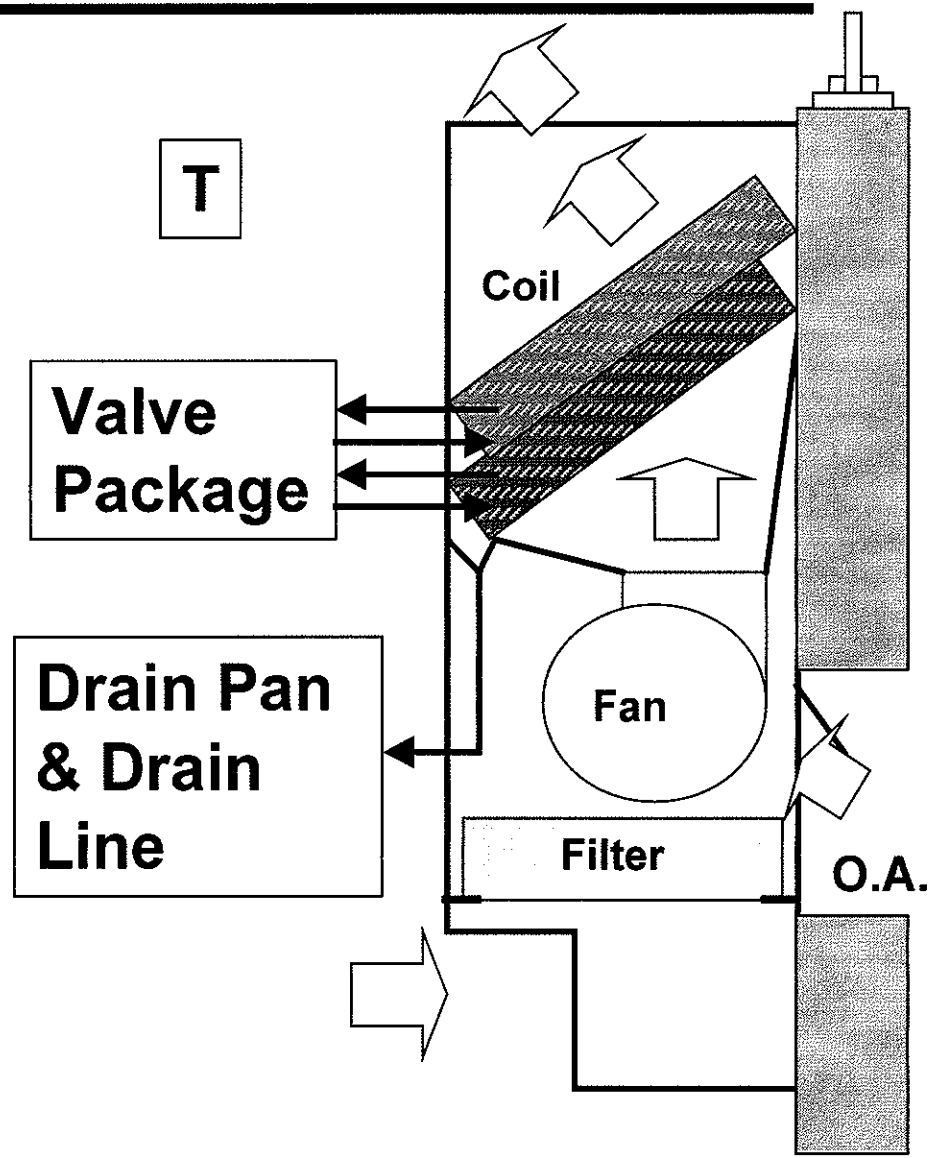

BASIC FAN COIL MODELS

- **Vertical Unit**
  - Under window
  - Furred in or cabinet
- **Horizontal Unit**
  - Above ceiling
  - In hallway ceiling cavity
- **Stack Unit**
  - Floor-to-floor
  - Furred in or cabinet
  - Includes piping
- **Flush Wall Unit**
  - Recessed into wall
  - Finished front panel

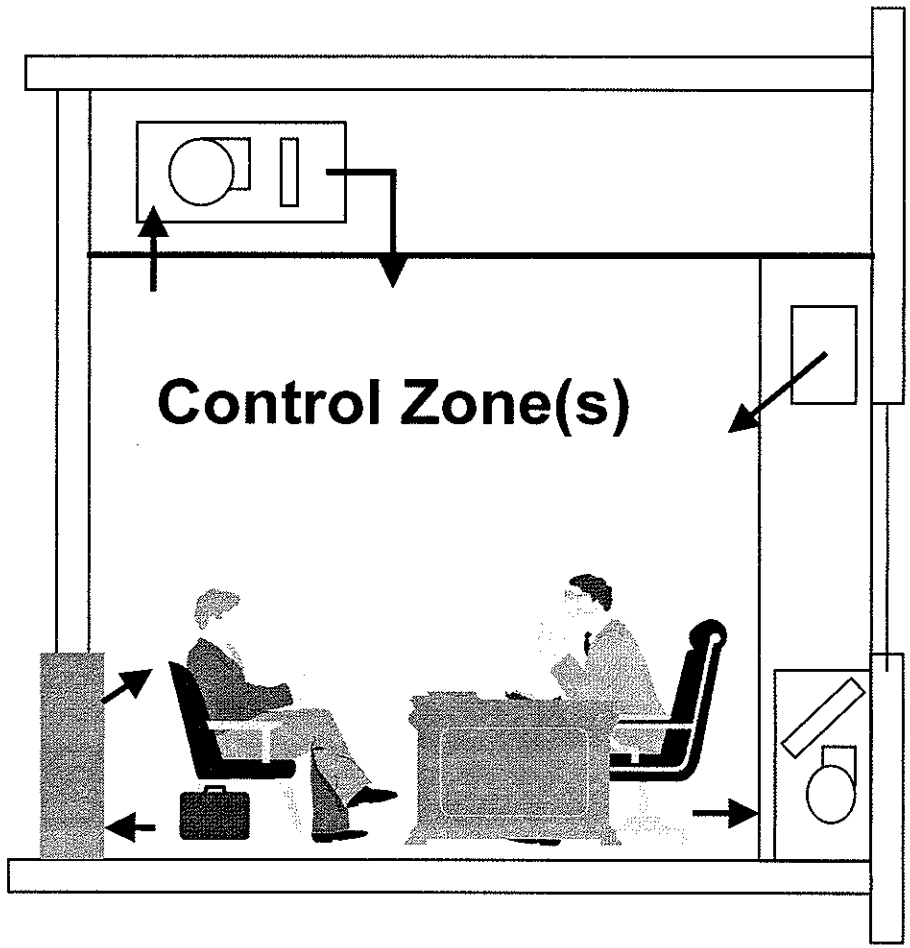

BASIC TERMINALS

- Stack - 42S
- Furred-in vertical
  - 42VA
- Cabinet vertical
  - 42VB
- Sloped cabinet
  - 42VF
- Loboy - furred-in
  - 42VC
- Loboy cabinet
  - 42VE
- Furred-in wall
  - 42VG

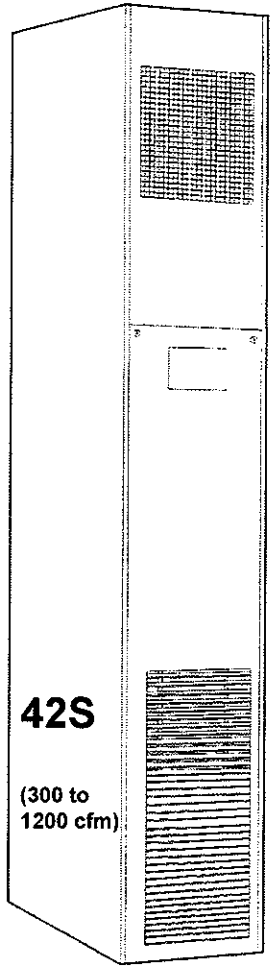

42S

(300 to 1200 cfm)

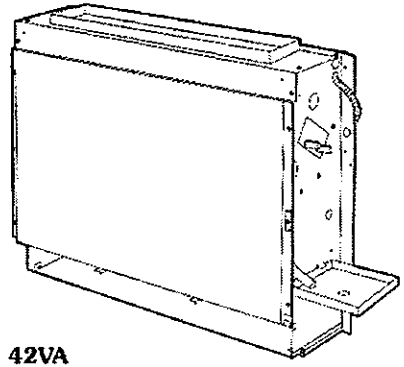

42VA
Furred-in model for under-the-window applications with top or front discharge.
(200-1200 cfm)

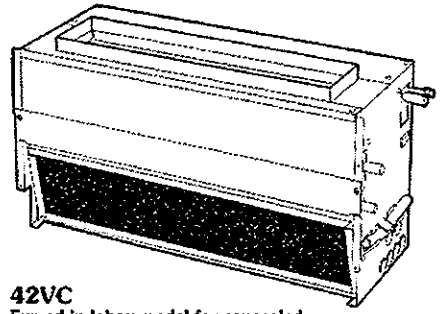

42VC
Furred-in loboy model for concealed under-the-window applications.
(200-600 cfm)

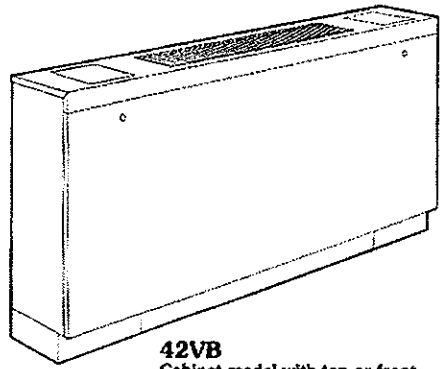

42VB
Cabinet model with top or front discharge.
(200-1200 cfm)

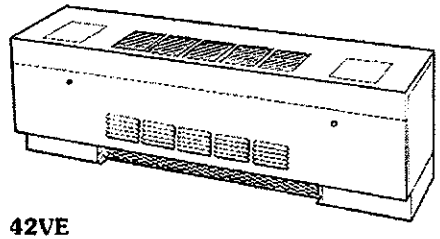

42VE
Cabinet loboy model with stamped louver discharge grille and 2 control access doors.
(200-600 cfm)

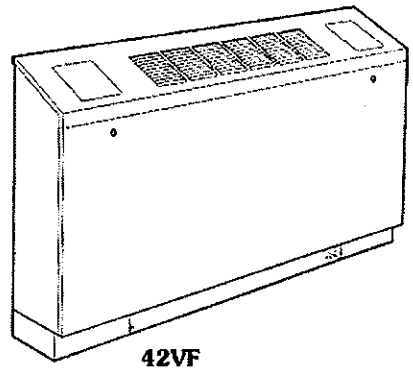

42VF
Cabinet model with slant top and top or front discharge.
(200-1200 cfm)

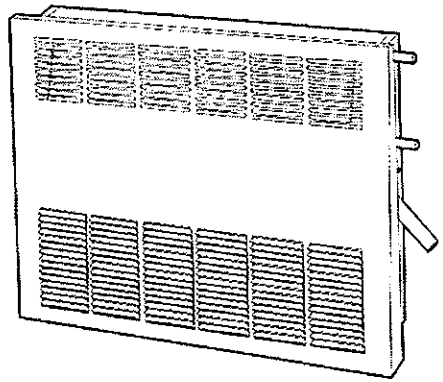

42VG
Furred-in wall model. Available with a 10-in. valve compartment extension.
(150 and 300 cfm)

TWO PIPE CHANGEOVER

The Two-Pipe Changeover System has one supply and one return pipe attached to a single coil located in the room terminal (see below) and is used in temperate climates with small heating loads. The system will operate with either hot water or cold water in the piping circuit. At no time will both hot and cold water be available to the unit at the same time. The system must be switched over twice a year - spring and fall. This will result in unsatisfactory room conditions during certain times of the year when some rooms may require cooling while others require heating. Separate zoning of the piping system for each exposure is sometimes used in an attempt to overcome this condition, but it is not always the answer.

The unsatisfactory room condition problem can be eliminated in the Two-Pipe System by adding a supplementary electric heating coil to the unit. This will allow the operator to keep cold water in the system until outdoor conditions reach the point where only heat is needed, at which time the system can be changed over from cooling to heating.

TWO PIPE CHANGEOVER

- One supply pipe
- One return pipe
- Cold water or hot water supplied to terminal
- Central water source must be switched twice a year
  - Spring and fall
- Weakness: spring & fall
  - Simultaneous heat and cool needed for building zones
- Use in temperate climates
- Solve changeover with local terminal electric heat

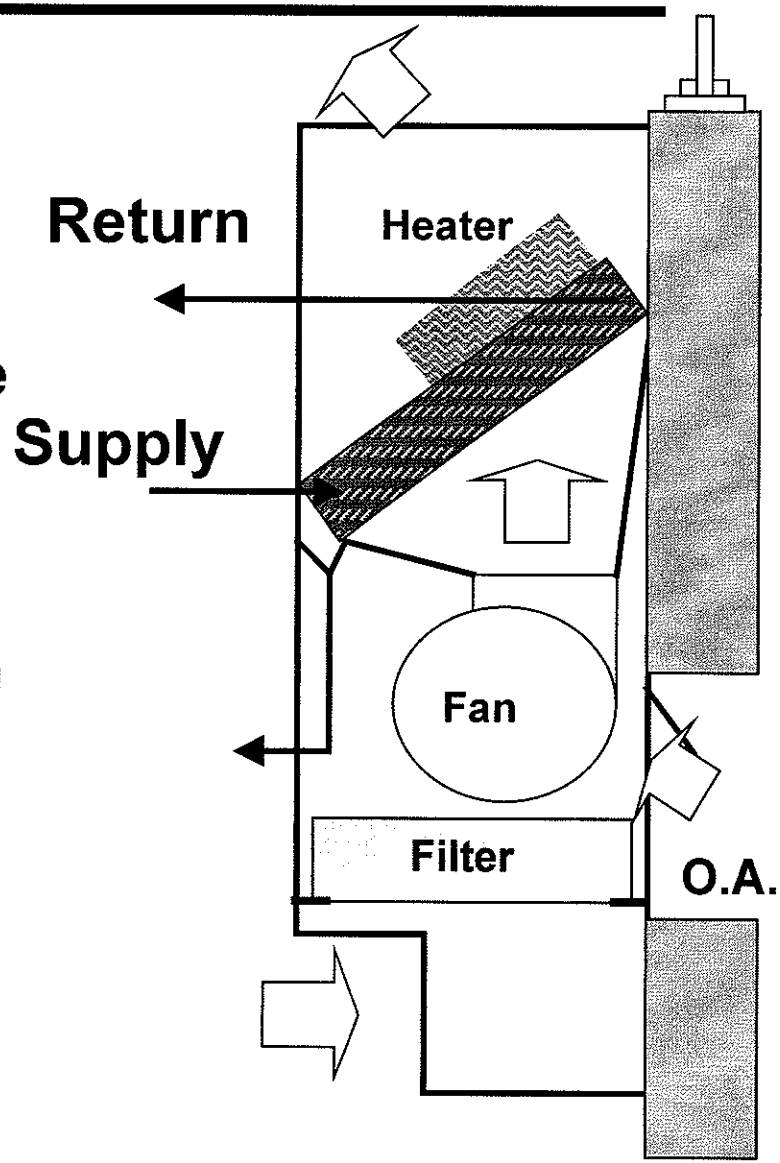

TWO PIPE CONTROL

Referring to the figure below helps illustrate how an automatically controlled Two-Pipe Changeover System with electric heat operates. Between 75F 100F outdoor temperature, chilled water is supplied to all terminal coils. As the outdoor temperature drops, this water is throttled to maintain room conditions. At 50F outdoor temperature, for example, with loads from sun, lights, and people, some chilled water will still be required at the terminal.

If, at 50F, the sun is not shining, the lights are off, and people are out of the room, there will be no chilled water required by the terminal and the electric heating coil will maintain room conditions.

This operating pattern will continue between outdoor air temperatures of 20F and 75F. Below 20F heat will be required by all terminals regardless of the impact of people, lights, and solar loads.

At this time, the system will be changed over and hot water will be supplied to all the fan coil terminals.

TWO PIPE CONTROL

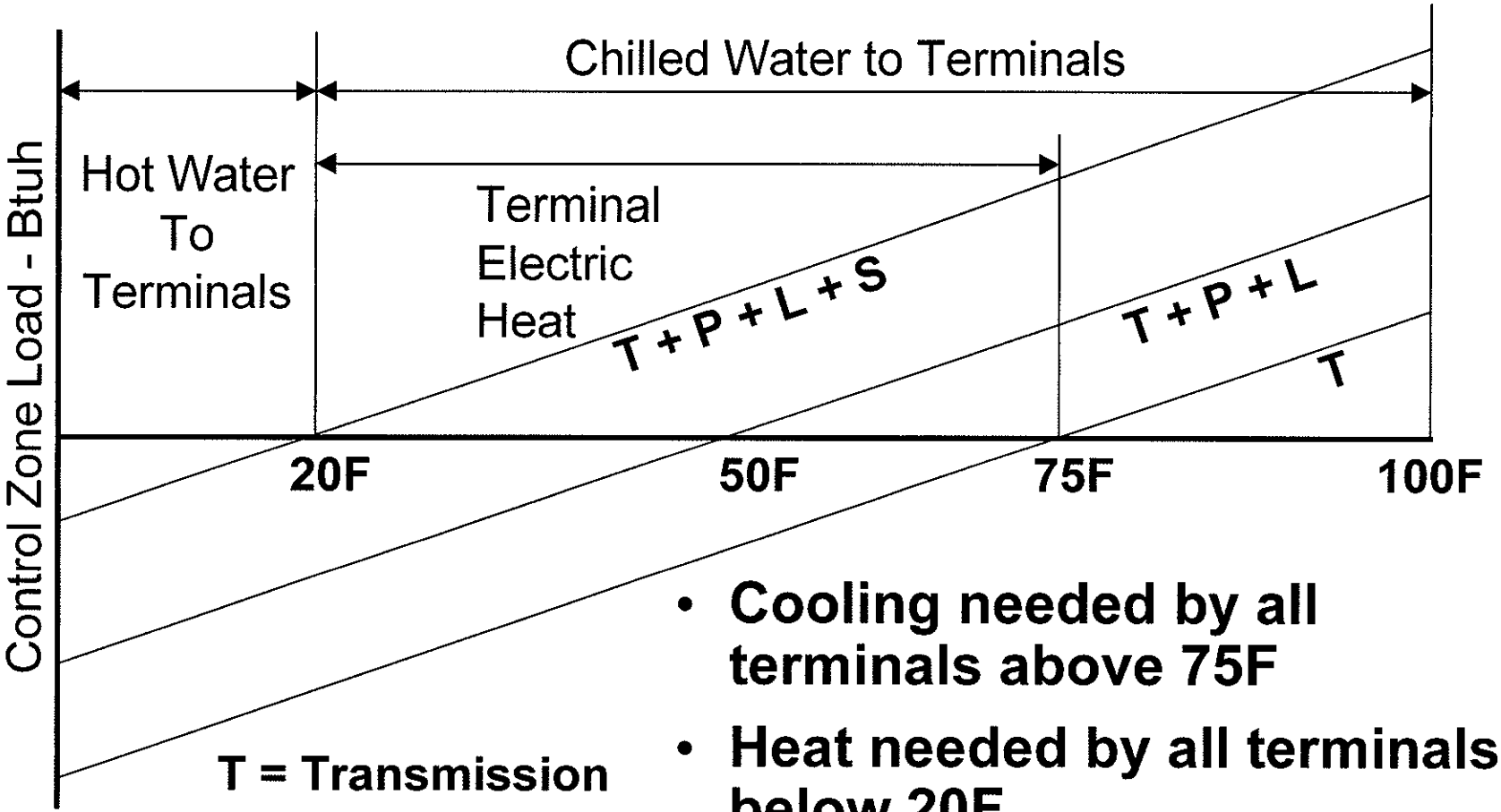

T = Transmission
P = People
L = Lights
S = Solar

- Cooling needed by all terminals above 75F
- Heat needed by all terminals below 20F
- Supplementary electric heat between 75F and 20F

FOUR PIPE NON-CHANGEOVER

The Four-Pipe Room Fan Coil System is characterized by the fact that there is a cold water supply and return piping system, as well as a hot water supply and return piping system connecting the room fan coil units.

The room units will either have two coils with a valve for each, or a single coil with a special three-way sequencing valve at the inlet of the coil and a special three-way diverting valve at the outlet of the coil. The choice as to what coil arrangement to use is purely the difference between the sum of the cost of each terminal and the required control valves for it to function properly.

With the Four-Pipe System, since both the heating and cooling media are available to the room terminal simultaneously, room conditions can be satisfactorily maintained no matter how the load for a particular room changes.

FOUR PIPE NON-CHANGEOVER

- 2 pipe chilled water
- 2 pipe hot water
- Two coils in the terminal
- Two separate piping systems
- Simultaneous cooling and heating available at all terminals
- Cold climates
- Excellent zone control

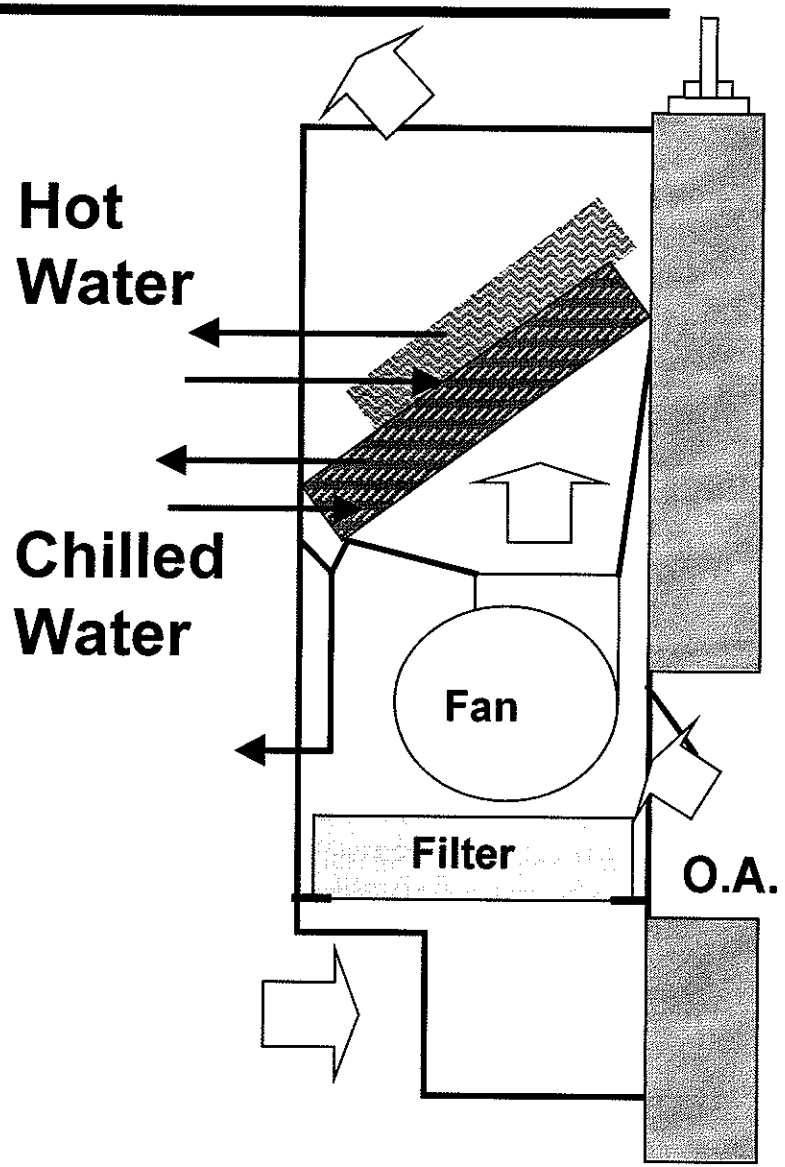

VENTILATION SOURCES

One of the weaknesses of the Room Fan Coil System is that as an all-water system, no provision other than infiltration, is provided for ventilation purposes.

To address this issue, three possible mechanical solutions are available:

1- Outside Air Wall Sleeve:
Usually mechanical opening of the damper is provided to the room occupant to open the outside air damper and provide fresh air. This is not a positive means of ventilation and is dependent on the wind pressure present on the outside wall. On the windward side of the building, air may enter the space and blow directly into the space without being conditioned by the room coil. On the leeward side of the building, room air may actually exfiltrate instead of infiltrate - providing no fresh air.

2- Separate Ventilation System:
A ventilation air handler is provided with a duct system delivering air to each room. The air handler brings the outside air to room conditions, while the room fan coil terminal handles all room loads.

3- Extension of an Interior System:
The interior of the building may be conditioned by an all-air system. The ventilation air for the Perimeter Fan Cool System is provided by the Interior System. A duct supplies interior system air to each room fan coil unit.

The problem with this approach is that the Interior System does not deliver a pure source of air to the perimeter zones. The air is a mixture of outdoor air and return air from the Interior System.

Thus, a separate ventilation system is the best approach to providing outdoor air for a Room Fan Coil System. Obviously this adds cost to the overall system, and makes the system an Air-water System.

Two layouts have been provided in the pages that follow to guide you in the layout of a Fan Coil System with separate ventilation system, or a ventilation system ducted to each Fan Coil Unit.

VENTILATION SOURCES

- **Infiltration (a)**
  - All-Water approach
- **Outside Air Wall Box (b)**
  - Wind Pressure Effect
- **Separate Ventilation System (c)**
  - Best approach
- **Extension of Interior System(d)**
  - Mixture of interior system return air and outdoor supplied to perimeter zones

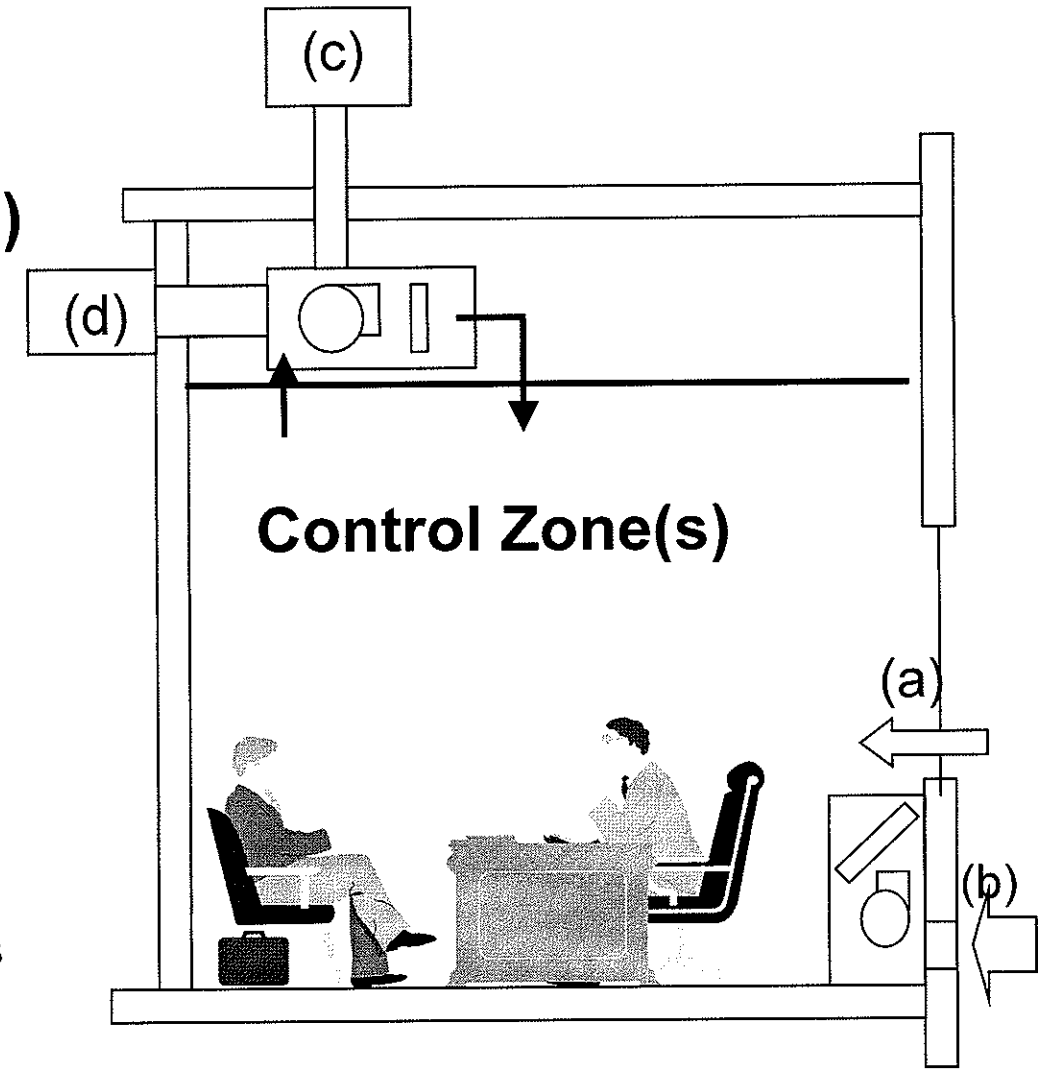

TYPICAL SYSTEM LAYOUT

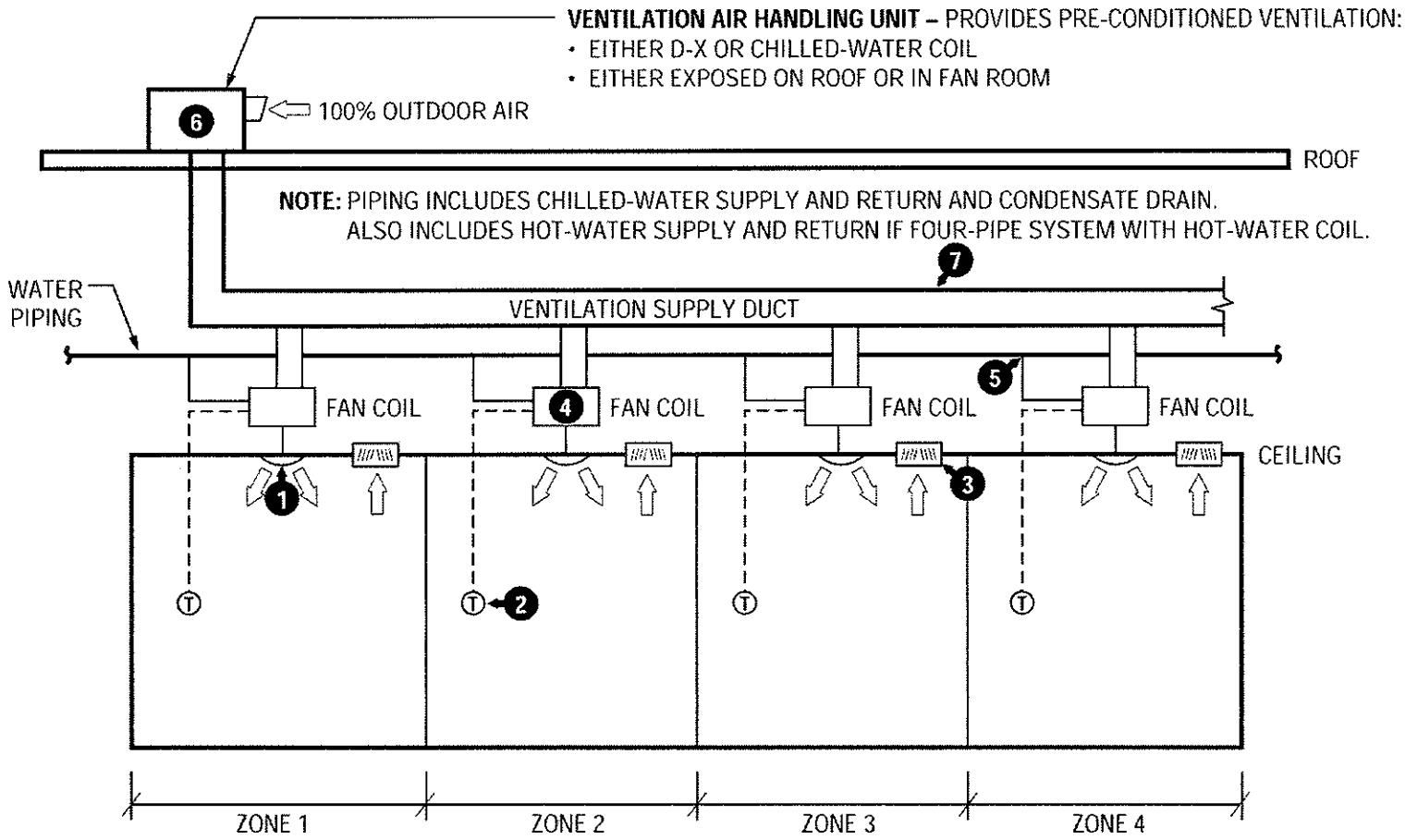

SYSTEM COMPONENTS:

1 – SUPPLY DIFFUSER
2 – ZONE THERMOSTAT
3 – RETURN GRILLE
4 – FAN COIL
5 – WATER PIPING
6 – AIR HANDLING UNIT
7 – DUCTWORK

TYPICAL SYSTEM LAYOUT

NOTE: CEILING RETURN AIR PLENUM SHOWN; DUCTED RETURN ALSO POSSIBLE.

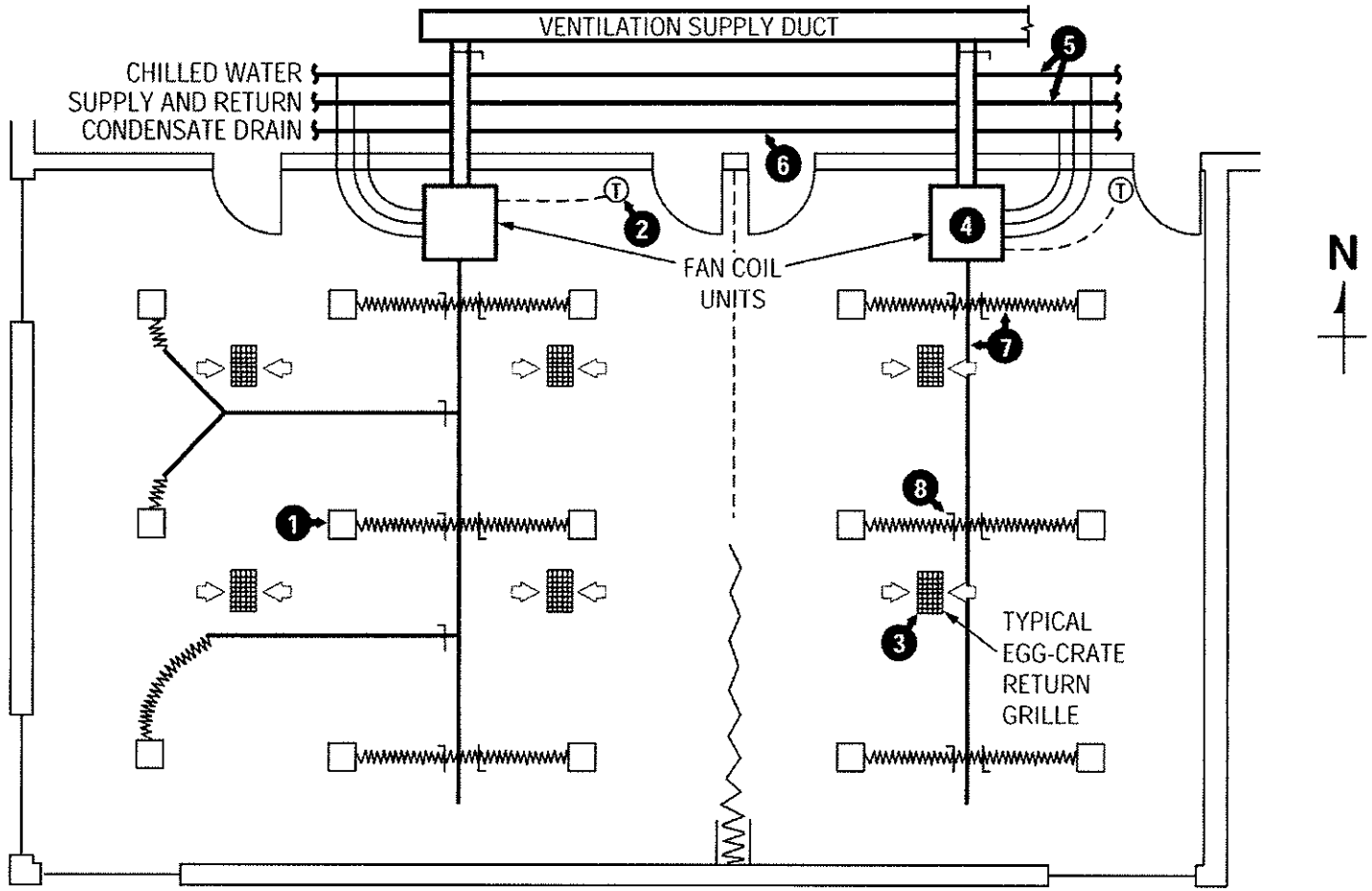

SIMPLIFIED SCHOOL LAB – 30' x 50'

SYSTEM COMPONENTS:

1 – SUPPLY DIFFUSER	3 – RETURN GRILLE	5 – WATER PIPING	7 – DUCTWORK
2 – ZONE THERMOSTAT	4 – FAN COIL	6 – CONDENSATE PIPING	8 – BALANCING DAMPER

SYSTEM CHARACTERISTICS (+)

In order to realize the maximum potential of the all-water Room Fan Coil System, the design engineer should be familiar with the following major system characteristics, which apply to both the Two-Pipe and Four-Pipe Systems:

1- The system requires no ductwork.
2- The system may be controlled manually, or by a simple room thermostat and the self-contained controls of the refrigeration machine.
3- Installation space requirements in the building are reduced to a minimum. Only enough room is needed for a water piping system and the room terminals.
4- Under-the-window air distribution effectively counteracts cold downdrafts during the heating season.
5- Refrigeration and heating equipment may be selected using gas, stem, or electricity to the best advantage.
6- Direct supply and control of outdoor air quantity in each room is possible.
7- Units in unoccupied spaces may be shut off completely.

SYSTEM CHARACTERISTICS (+)

- No ductwork required
- Simple control system
- Minimum building installation space required
- Under-the-window terminals effectively overcomes downdraft during heating season
- Use of appropriate energy sources for chiller and boiler possible
- Direct supply of ventilation air to room possible
- Can shut off terminals in unoccupied rooms

SYSTEM CHARACTERISTICS (-)

Besides the many advantages of the Room Fan Coil System, there are a few points that should be thoroughly evaluated before the system is selected. If these concerns are overlooked or not properly evaluated, serious operational problems may occur. The decision as to whether the Room Fan Coil System is acceptable to the application being considered will be based on the acceptability of the following operational characteristics of the system.

1- Maintenance will be required in the occupied space.
2- The wet coil surface of the room terminal provides for the growth of bacteria, algae and fungus.
3- If outside air wall boxes are used to provide ventilation air to the space, it should be noted that, in a high rise building, wind pressure and stack effect may alter proper operation of the units.
4- High efficiency filter and spray coil equipment cannot be used with the All-water System because there is no Central Station Air Distribution System.
5- Low power factor due to multiplicity of small motors will result in inefficiency of electrical distribution and possibly increase power rate.
6- The system has the potential of providing unsatisfactory room relative humidity.

SYSTEM CHARACTERISTICS (-)

- Maintenance in occupied zone
- Wet coil in room (bacteria growth)
- Stack effect and wind pressure with outdoor air boxes
- Only low efficiency filtration possible
- Low motor power factors
- Unsatisfactory room humidity control
- Separate ventilation system may be required

PROJECT: PIPING SYSTEM

You have now been exposed to the various piping systems that can be used with a Fan Coil System:
2-Pipe
2-Pipe with auxiliary terminal electric heat
4-Pipe

Working in your design teams, decide on the type of piping system that would be appropriate for the design project building located in the city described in the project.

Then defend your choice with reasoning in the space provided on the Fan Coil Control Schedule Form.

The other areas on the form will be completed by your design team at a later work session.

PROJECT: PIPING SYSTEM

- Gather in your design teams
- Locate the Fan Coil Control Schedule form in your Design Project at the end of this book
- Decide on the piping system you will use for this project:
  - 2-pipe
  - 2-pipe with auxiliary terminal electric heat
  - 4-pipe



- Defend your choice in writing in the space provided on the form

FAN COIL CONTROL SCHEDULE FORM		
PIPING SYSTEM TYPE:	**SELECTION**	**In the space provided, defend your choice in writing:**
CHOICES: 2-Pipe 2-Pipe With Aux. Electric Heat In The Terminal Units 4-Pipe		

DESIGN CHECK LIST STEPS

- ***Select control zones***
  - ***Hotel rooms are the control zones***
  - ***See next slide***
- **Calculate peak zone cooling and heating loads**
- **Select room fan coil terminals**
- **Select type of terminal controls**
- **Make piping layout**
- **Make condensate drain layout**
- **Select refrigeration machine**
- **Select auxiliary equipment**

DEFINE CONTROL ZONES

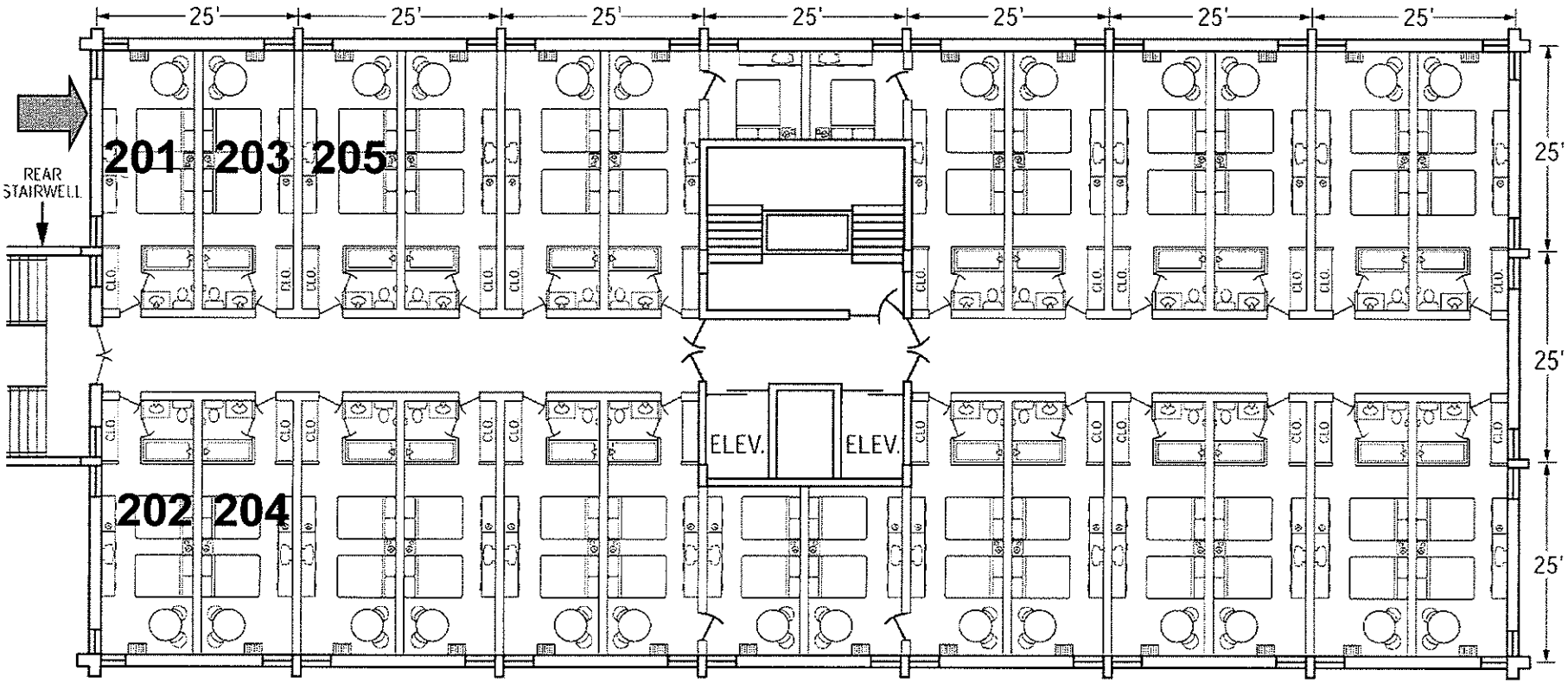

- **Each hotel room is a control zone**
- **Assign room numbers beginning with NW room**
  - **201 (NW room, 2nd floor); 301 (NW room, 3rd floor); ….. 1901**

PROJECT: TAG IDENTITY

- Gather in your design teams
- Locate the top and intermediate Hotel room floor plans in the design project material in the back of this book
- Number the hotel rooms on each floor plan
  - The numbers will become the tag identification for fan coil selections you will perform later

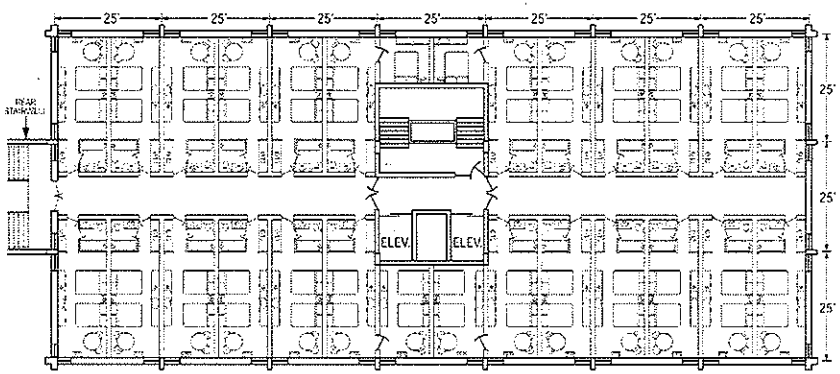

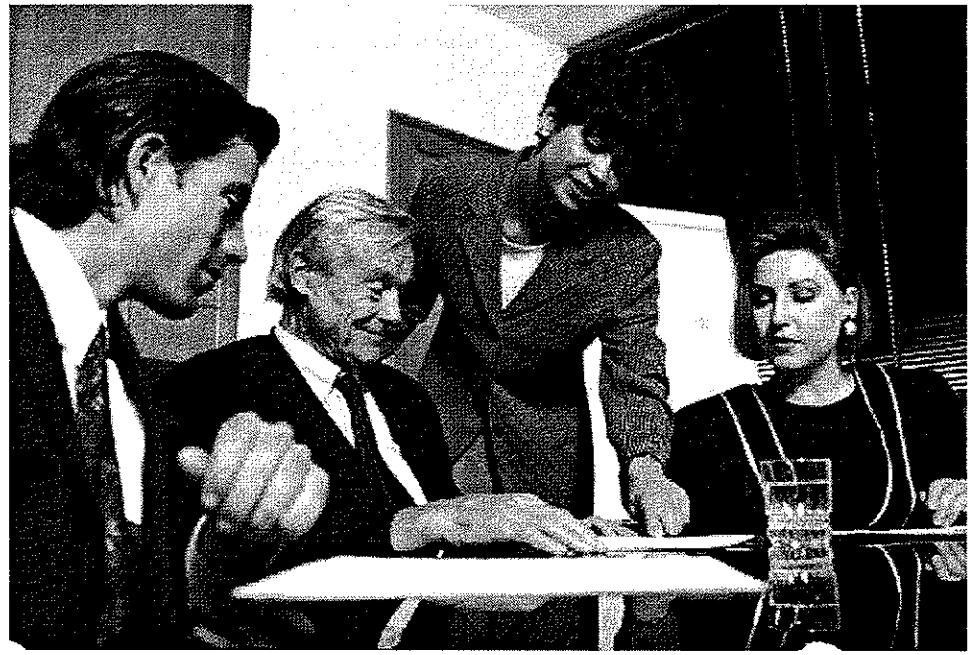

DESIGN CHECK LIST STEPS

We are now ready to calculate the cooling and heating loads for the control zones we have just given tag names to. This part of the project has already been done for you and the results are provided in a table that follows.

DESIGN CHECK LIST STEPS

- Select control zones
- *Calculate peak zone cooling and heating loads*
  - *These are provided (see next slide)*
- Select room fan coil terminals
- Select type of terminal controls
- Make piping layout
- Make condensate drain layout
- Select refrigeration machine
- Select auxiliary equipment

ZONE LOAD SUMMARIES

(Ventilation: Cooled and Heated to Room Design Conditions)
[Room Design: (Summer 75DB, 63.8WB, 70GR); (Winter 72DB)]
[Outside Air Design: (Summer 97DB, 75WB, 94GR); (Winter 2DB)]

ZONE	PEAK TIME	OUTDOOR DESIGN DB / WB	NUMBER PEOPLE	PEAK RSH	PEOPLE LATENT LOAD	SPACE HEAT LOAD	VENTILATION			
							CFM (std)	Cool Sen+Lat	Cool Sen	HEAT TO ROOM
N Top 2-Bed	Jul 4PM	96.4/74.8	2	6,360	320	5,066	80	3,261	1,936	6,160
N Top Small 1-Bed	Jul 4PM	96.4/74.8	1	5,500	160	5,000	40	1,630	968	3,080
S Top 2-Bed	Aug 4PM	96.4/74.8	2	6,640	320	5,066	80	3,261	1,936	6,160
S Top Small 2-Bed	Aug 4PM	96.4/74.8	2	6,200	320	5,000	80	3,261	1,936	6,160
NW Top 2-Bed	Jul 5PM	94.9/74.4	2	9,829	320	9,876	80	3,261	1,936	6,160
NE Top 2-Bed	Jul3 PM	97.0/75.0	2	10,082	320	11,157	80	3,261	1,936	6,160
SE Top 2-Bed	Jul 3PM	97.0/75.0	2	10,329	320	11,157	80	3,261	1,936	6,160
SW Top 2-Bed	Jul 5PM	94.9/74.4	2	10,074	320	9,876	80	3,261	1,936	6,160
Hall Top	Jul 5PM	94.9/74.4	9	28,961	2,363	15,590	90	3,668	2,178	6,930
Hall Entry Top	Jul 7PM	89.9/73.1	1	5,393	338	3,600	0	0	0	0
N Int 2-Bed	Jul 3PM	97.0/75.0	2	4,896	320	2,266	80	3,261	1,936	6,160
N Int Small 1-Bed	Jul 3PM	97.0/75.0	1	4,300	160	2,200	40	1,630	968	3,080
S Int 2-Bed	Aug 3PM	97.0/75.0	2	3,392	320	2,266	80	3,261	1,936	6,160
S Int Small 2-Bed	Aug 3PM	97.0/75.0	2	3,300	320	2,200	80	3,261	1,936	6,160
NW Int 2-Bed	Jul 5PM	94.9/74.4	2	6,468	320	7,076	80	3,261	1,936	6,160
NE Int 2-Bed	Jul 3PM	97.0/75.0	2	6,665	320	8,357	80	3,261	1,936	6,160
SE Int 2-Bed	Aug 3PM	97.0/75.0	2	6,920	320	8,357	80	3,261	1,936	6,160
SW Int 2-Bed	Aug 5PM	94.9/74.4	2	6,776	320	7,076	80	3,261	1,936	6,160
Hall Int	Jul 3PM	97.0/75.0	9	15,546	2,363	3,340	90	3,668	2,178	6,930
Hall Entry Int	Jul 3PM	97.0/75.0	1	3,691	338	1,850	0	0	0	0
18 Floors (Hotel)	Aug 3PM	97.0/75.0	972	2,164,719	155,520	1,777,421	45,180	1,841,537	1,093,356	3,478,860
Top Floor Hotel	Jul 4PM	96.4/74.8	54	163,631	8,640	180,790	2,250	91,710	54,450	173,250
Int Floor Hotel	Aug 3PM	97.0/75.0	54	118,018	8,640	93,731	2,250	91,710	54,450	173,250

DESIGN CHECK LIST STEPS

Knowing the zone heating and cooling loads, we can now center our attention on selecting the type and size of Room Fan Coil Units we will use in the hotel rooms.

DESIGN CHECK LIST STEPS

- Select control zones
- Calculate peak zone cooling and heating loads
- *Select room fan coil terminals*
  - *Select type of terminal product*
  - *Select terminal size*
- Select type of terminal controls
- Make piping layout
- Make condensate drain layout
- Select refrigeration machine
- Select auxiliary equipment

SELECTION OF TERMINAL TYPES

Vertical Unit Application:
The location of vertical units under the windows of peripheral areas provides the best possible air distribution and heating system performance. With this location, it is possible to blanket the window and adjacent wall area with heated air to offset natural downdrafts and also reduce the radiant effect of the cold surfaces. Also with this unit location, a floor level return air intake is provided to pick up any cold floor air that may be present.

Horizontal Unit Application:
In areas having only moderate heating requirements and where heat is not required along the exterior wall, horizontal ceiling suspended units are generally preferred because they do not occupy valuable floor space. Frequently, when it is possible to supply two sets of terminals on either side of a corridor from a single set of piping connections, use of horizontal units results in a lower cost installation. Occasionally, because of the interference of a vertical unit with draperies or other decorative considerations, this arrangement is also resorted to. Best results with this arrangement are obtained during the heating season when a floor level return air intake is provided, although ceiling returns are also frequently used.

Stack Unit Application:
In multi-story building applications with moderate heating requirements and where heat is not required along the exterior wall, stack units are generally preferred because they significantly reduce installation costs - having the floor to floor piping systems already installed as part of the unit at the factory.

Frequently, when it is possible to supply two sets of terminals on either side of a wall (back to back) from a single set of piping connections, the stack units result in an even lower cost of installation.

SELECTION OF TERMINAL TYPES

- **Horizontal Units**
  - Moderate heating climates
  - Do not use floor space
  - Ducted supply & returns
  - Use opposite sides of corridor
  - Floor return for heating
- **Vertical Units**
  - Along outside wall
  - Good heating performance
  - No supply & return ducts
- **Stack Units**
  - Multi-story building
  - Back-to-back (minimal piping)
  - Moderate heating climates
  - No supply & return ducts

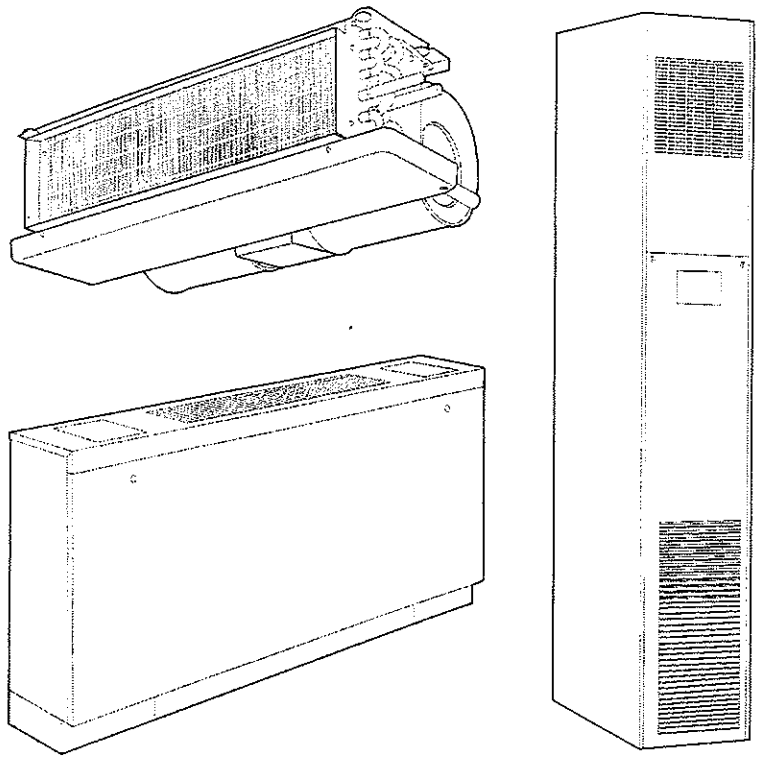

EXERCISE: TERMINAL TYPES

- Gather in your design teams
- In this course we will utilize the stack fan coil product line for the hotel rooms
- Discuss the following with your team:
  - What type of units should be used in the halls:
    - Could they be stack units?
  - Why use the stack units on this building?
  - What other 42 series product might be used for the hotel and why?
- Be prepared to share your findings with the class as a whole.



DISCUSSION

Instructor-led class discussion:

- **Why stack units for the hotel?**
- **What type of units to use in the halls**
- **What other unit types might work for the hotel?**
- **Why?**

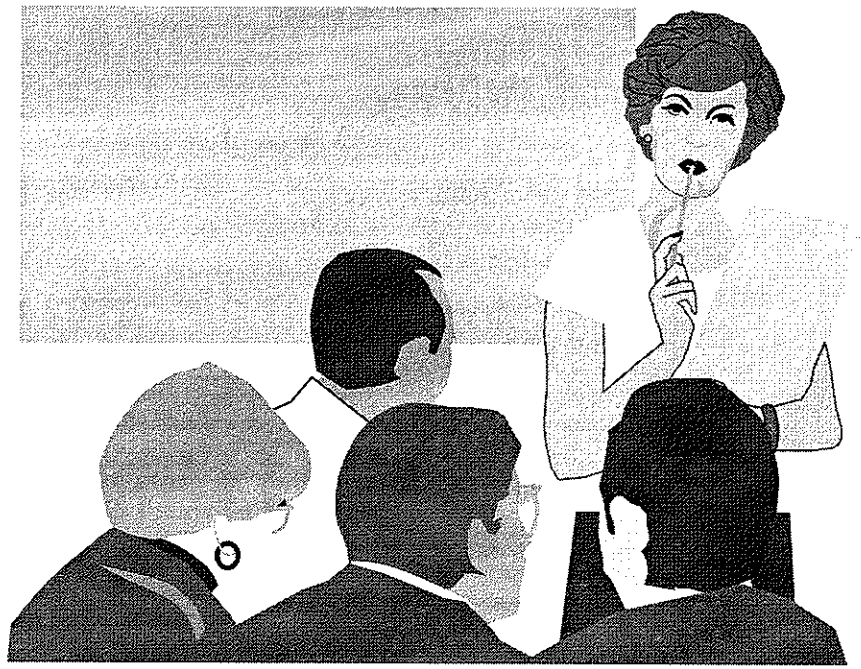

PROJECT: DECIDE ON VENTILATION METHOD

The Fan Coil System is an All-water System - water being piped to fan-coil terminal units located in control zones (rooms). If ventilation air is required in the control zone, then there are (4) possible ways this can be accomplished with a Fan Coil System:

1- Rely on infiltration through windows and doors. This is the least desirable method, and yet may be satisfactory in some applications.

2- When using vertical Fan Coil Units along an outside wall, provide an outside air damper as part of the unit. The unit fan can draw outside air into the room. In this method the occupant is usually provided with a level on the unit to select whether he wants outside air or not. In this system the Fan Coil Unit must be sized to handle the room loads as well as the ventilation loads.

3- Extension of an Interior All-Air Type Conditioning System. Ventilation air for the perimeter is brought in through the air handler supplying the interior building zones and ducted to the perimeter Fan Coil Units. This process dilutes ventilation air with air returning from the building, provides a mixture of these two air streams to the perimeter zones. This is not a true positive provision of fresh air to the perimeter zones and may not be allowed by some building codes.

4- Provide a separate ventilation air handler to specifically provide fresh outdoor air through a duct system to each Fan Coil Unit or directly into the space. In this system the outdoor air is cooled and dehumidified to room conditions - and is neutral toward absorbing any room loads. The Fan Coil Units handles all room loads.

At this point in the course your design team will decide on which ventilation method to use. Be sure to write your reasoning down on paper and hand it in as a part of your design project.

PROJECT: DECIDE ON VENTILATION METHOD

- We have pre-determined that the hotel will use 42S stack fan coil units
- Gather into your design teams
- Locate the Ventilation Schedule Form in the Design Project at the back of this book
- Decide which of the four ventilation options your team will use.
- Justify your decision

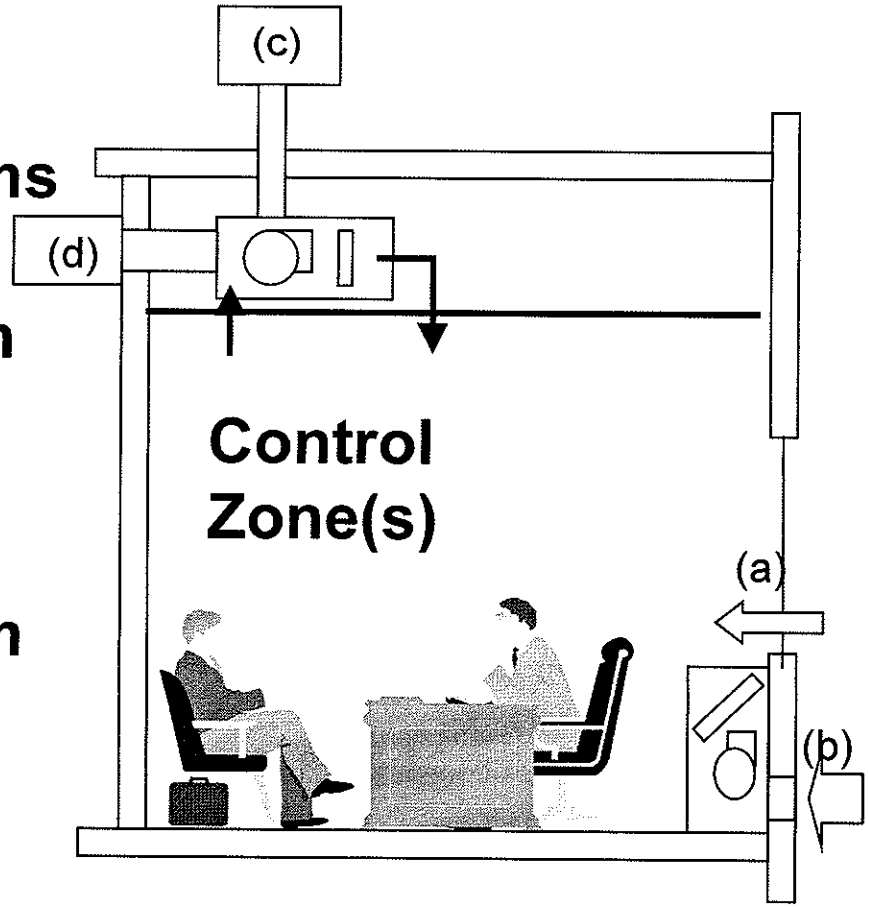

TERMINAL SELECTION GUIDLINES

A- Decide on the type of Stack Unit (1 of 4 models)

B- Select a unit whose sensible heat capacity (SHC) equals or exceeds the required zone room sensible heat (RSH) to assure the desired room dry bulb temperature can be maintained.

C- Try to have the unit total capacity (TH) exceed the required room total heat (RTH) in order to improve the control of the room % Relativity Humidity - particularly at part load.

D- Select the units based on medium fan speed to minimize fan noise in the space. Standard ratings are based on high fan speed.

E- For **Modulating Valves**, select for a target rise of 8 - 12 degrees F in order to obtain a reasonable GPM.
1. This will yield reasonable pressure drops (< 12 ft.)
2. For throttling or bypass type of water control valves this will result in a reasonable part load range of the coil. High rise selections result in low coil tube velocities. At part load the control valve would throttle - resulting in even lower tube velocities. Under these conditions laminar flow through the coil tubes can result and the terminal will lose control.
3. **On-off valve** control will not experience laminar flow problems and selections can be made up to 16 degrees F rise.

F- Select for target pressure drops at or below 10 ft W.G. if possible when using water control.
1. The modulating control valve is normally selected for one to two times the coil pressure drop for valve control stability reasons. Thus, the combined valve-coil pressure drop could become quite high.

G- Select the smallest unit possible in order to minimize job first cost.

Ratings:

To gain a rough idea of typical unit performance, manufacturers publish summary tables showing typical standard ARI (American Refrigeration Institute) performance for each model.

Detailed ratings for room fan coils are usually published in a printed catalogue, however, the selection process is usually involved and time consuming.

To simplify selection of units, the selection process has been computerized in Carrier's Electronic Catalog.

The following pages explore the selection process for a 42S "stack" type unit for the Casino Hotel floors.

TERMINAL SELECTION GUIDLINES

- Choose fan coil model type to use
- Unit sensible heat capacity => room sensible heat
  - Maintains desired room dry bulb temperature
- Unit total heat capacity => room total heat
  - Improve room relative humidity (particularly at part load)
- Select for medium fan speed (minimize fan noise)
- Modulating valve control:
  - Select for target rise with (8 to 12 F)
    - Avoid laminar flow at part load
  - Select For target pressure drop (< = 10 ft W.G.)
    - Reasonable pressure drop (coil + control valve)
    - Control valve sized For 1 to 2 times coil pressure drop
- Select for up to 16F rise for on-off control
- Select smallest unit possible (first cost)

CASINO TOP FLOOR LOADS

- We will use room 1901 (NW 2-bed corner) as an example showing the 42S selection procedure.
- Choose 42SJ: furred-in back-to-back type units
- Required room conditions (from load summary):
  - Room sensible heat: 9829 Btuh
  - Room total heat: 10149 Btuh
  - Entering dry bulb temperature 75 F
  - Entering wet bulb temperature 63.8 F
  - Entering water temperature 45 F
  - System type 2 - pipe cooling/ heating
  - Fan speed (277/1/60) medium
  - External fan static pressure (assume dirty filter) 0.05
  - Heating room sensible heat: 9876 Btuh
  - Heating entering dry bulb: 72 F
  - Heating entering water temperature: 120 F

CHECK TYPICAL ARI RATINGS

UNIT TYPE	UNIT SIZE - COIL ROWS	NOMINAL CFM	GPM	COOLING CAPACITY		POWER INPUT WATTS
				TOT BTUH	SEN BTUH	
42S	03 - 3	300	2.4	11,500	7,000	85
Stack	04 - 3	400	2.9	13,600	9,000	115
	06 - 3	600	4.5	21,900 **10,149**	14,000 **9,829**	135
	08 - 3	800	5.5	27,500	17,800	210
	10 - 3	1000	7.7	37,700	24,500	290
	12 - 3	1200	8.1	43,100	28,400	380

Basis: 80 F EDB; 67 F EWB; 45 F Entering Fluid; 10 F Rise; High Fan Speed; Dry Coil; 0.05 E.S.P.; 115/1/60 Motor Voltage

- **Looks like the 42S 06 - 3 unit**
- **14,000 sensible capacity vs. 9,829 Btuh room sensible**
- **21,900 total capacity vs. 10,149 Btuh room total**
- **Need to check performance under actual conditions**
- **Use Carrier Electronic Catalog**
- **Fill in the input data sheet (next page)**

FILL IN COMPUTER INPUT DATA

- **The following input form can be used to assemble data for a terminal selection (find in Design Project):**

	Input Information	Units	
1	**Zone Tag Name**		1901 NW
2	**42 Product Type**	1 thru 6	5
3	**Coil Application**	1 thru 3	1
4	Fluid Concentration	%	DNA
5	System Altitude	feet	535
6	**System Heating Rows**	1 thru 3	1
7	**Motor Voltage**	1 thru 5	4
8	**Cooling Selection Method**	1 thru 4	2
9	Fan Motor Speed	H, M, L	M
10	External Static pressure	In W.G.	0.05
11	Required Capacity	Btuh	9829
12	Entering Air Dry Bulb	F	75
13	Entering Air Wet Bulb	F	63.8
14	Entering Fluid Temperature	F	45
15	Fluid Flow Rate (maximum)	GPM	DNA
16	Fluid Temperature Rise	F	10
	Heating Performance		
17	Solve For Total Heating Laod	Btuh	X
18	or Fluid Flow rate	GPM	
19	Entering Air Dry Bulb	F	70
20	Entering Fluid Temperature	F	140
21	Fluid Flow Rate	GPM	DNA

42 Product Type
1. 42C Horrizontal
2. 42V Vertical
3. 42V Lowboy
4. 42D Ducted
5. 42S Stack
6. 42B Belt Drive

System Heating Rows
1. 2 Pipe Cooling/Heating
2. 4 pipe, 1 Row Heating
3. 4 pipe, 2 Row Heating

Motor Voltage
1. 115, 1 Phase, 60 Hz
2. 208, 1 Phase, 60 Hz
3. 230, 1 Phase, 60 Hz
4. 277, 1 Phase, 60 Hz
5. 220, 1 Phase, 50 Hz

Coil Application
1. Fresh Water (default)
2. Ethylene Glycol
3. Direct Expansion

Cooling Selection Method
1. Total Cooling
2. Sensible Cooling
3. Fluid Flow rate (Maximum)
4. Fluid Temperature Rise

SAMPLE COMPUTER OUTPUT

TYPICAL FAN COIL COMPUTER OUTPUT

Prepared by ..... TRAINCOM
Tag Name ..... 1901NW TOP

Size 6 Confirmed

Date: '03-16-00
61015982

SYSTEM DATA

Product	42S STACKED
Model	42SJ - BACK-TO-BACK FURRED
Size	06
System	2 Pipe
Altritude	0 Ft
Type	Fresh Water

Air Flow Rate.....	450 CFM
External Static	0.05 In
Fan Motor data:	Medium Speed
	277V, 1Ph, 60Hz
	1/10 hp, 0.05 amps, 100 watts

COOLING DATA

Total Capacity	14.7	MBH	10.149 Needed
Sensible Capacity ...	9.8	MBH	9.829 Needed
Fluid Flow Rate	2.7	GPM	
Entering Fluid Temp.	45.0	deg F	
Leaving Fluid Temp.	55.7	deg F	
Fluid Temp Rise	10.7	deg F	
Fluid pressure Drop.	8.1	ft wg	

Entering Air DB	75.0 deg F
Enterinmg Air WB ...	63.8 deg F
Leaving Air DB	54.8 deg F
Leaving Air WB	52.4 deg F

Cooling Rows	3.0
Method of Balance ..	Sensible Cooling

HEATING DATA

Heating capacity	16.1	MBH
Fluid Flow Rate	1.8	GPM
Entering Fluid Temp.	120.0	deg F
Fluid pressure Drop.	2.5	ft wg

Entering Air DB	72.0 deg F
Enterinmg Air WB ...	105.1 deg F
Heating Rows	3.0
Method of Balance ..	Heating Load

ROOM FAN COIL SCHEDULE

- **Locate Design Project in back of this book**
- **Locate the room fan coil schedule sheet**
- **Find sample sheet for casino example problem**
  - **Shown below:**
  - **This shows how to fill out the form**

ROOM FAN COIL SCHEDULE														
NAME: Marvin Patnode				NOTE: 45 F CHILLED WATER				DATE: Mar 16, 2000						
DESIGN TEAM NUMBER:				120 F HOT WATER				JOB NAME: Casino Hotel Example (NW Top Room)						
TAG NAME	UNIT MODEL	NO. OF UNITS	UNIT SIZE-ROWS	COOLING				HEATING					FAN SPEED	FAN MOTOR VOLTAGE
				CAPACITY		GPM	P.D.	COIL		CAPACITY BTUH	GPM	P.D.		
				TOT BTUH	SEN BTUH			TYPE	ROWS					
1901NW TOP	42SJ	1	06-3	14700	9800	2.7	8.1	HW	3	16100	1.8	2.5	Med	277/1/60

DEMONSTRATE 42S SELECTION PROGRAM

- Follow your instructor
- Activate your computer
- Activate the 42 Series selection program in the Carrier Electronic Catalog
- Your instructor will guide you through the steps

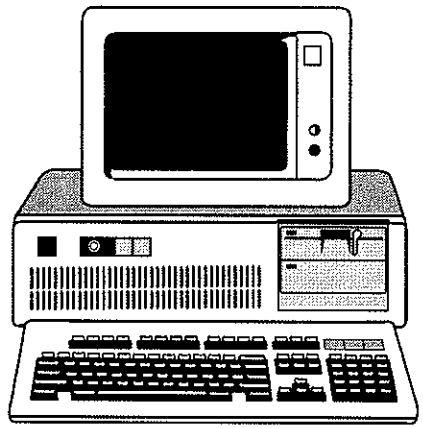

DESIGN PROJECT WORKSESSION

- Locate the Casino Hotel room loads
- Locate your numbered hotel room zones
- Select fan coil units for the Unique Room Loads on these 2 floors using the computer program
  - What type of units will you use in the hallway?
- Print out your selections
- Create a Fan Coil Schedule for the Unique Selections
  - Locate schedule form in the Design Project at the back of this book

ROOM FAN COIL SCHEDULE															
NAME:								DATE:							
DESIGN TEAM NUMBER:								JOB NAME:							
TAG NAME	UNIT MODEL	NO. OF UNITS	UNIT SIZE-ROWS	COOLING				HEATING					FAN SPEED	FAN MOTOR VOLTAGE
				CAPACITY		GPM	P.D.	COIL		CAPACITY BTUH	GPM	P.D.		
				TOT BTUH	SEN BTUH			TYPE	ROWS					

END

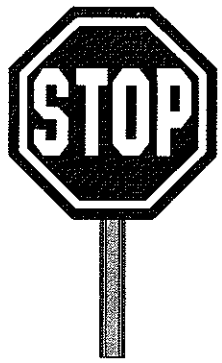

AIR HANDLERS

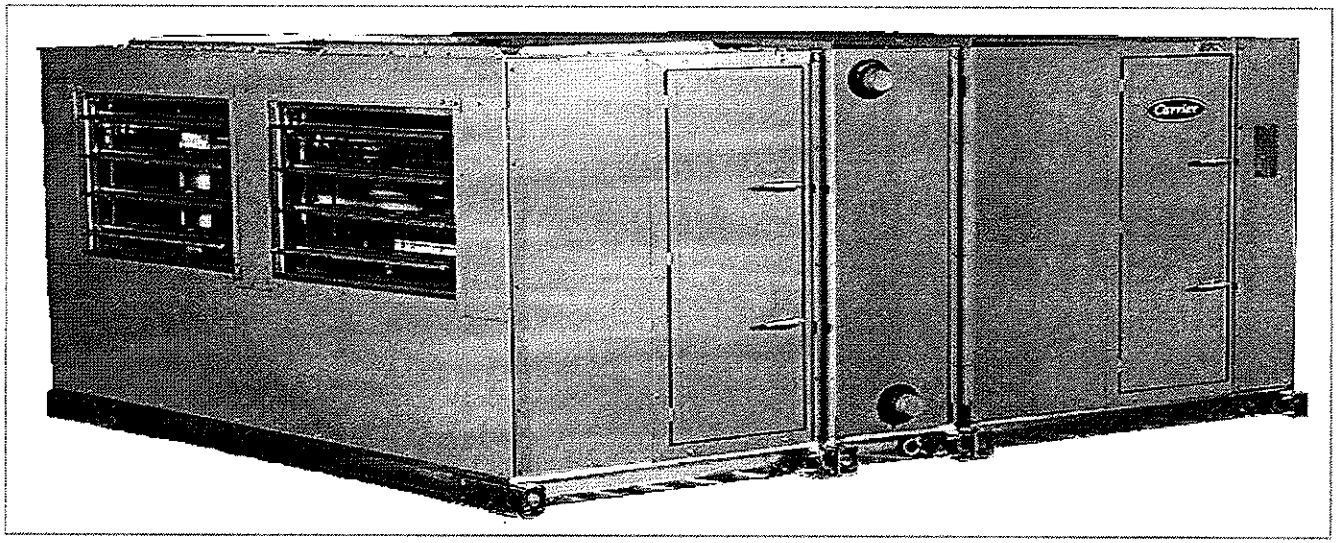

DES700

APPLIED WATER SYSTEM DESIGN

OBJECTIVES

Having selected the Fan Coil Units for the Hotel, we need to turn our attention to other products requiring chilled water in the building. The Casino has two identical air handling units located in the basement, and the Hotel requires a ventilation air handler located in the rooftop penthouse mechanical room.

When you have completed this section you should be able to do the following:

1-Identify the basic air handler types
2-Identify the components that make up an air handling unit
3- Understand where coils are located
4- Identify types of fans used
5- Identify typical unit accessories
6- Identify and select various types of filters
7- Identify a face and bypass unit
8- Understand blow through and multizone units
9- Select a unit
10-Use selection cost trends

OBJECTIVES

- Be able to identify the basic air handler types
- Identify the components that make up an air handling unit
- Understand where coils are located
- Identify types of fans used
- Identify typical unit accessories
- Identify and select various types of filters
- Identify a face and bypass unit
- Understand blow through and multizone units
- Be able to select a unit
- Be able to use selection cost trends

INTRODUCTION

Factory assembled central station air handling units are generally one of the first items of air conditioning equipment selected after the cooling load estimate is completed. In the selection process, a chilled water or refrigerant temperature level is established and this, in turn, dictates the conditions under which the refrigeration equipment must operate. Because of its effect on other system components, it is important for us to understand what central station air handling equipment is, and how it should be selected and applied.

There is a wide variety of central station air handling equipment available in the market. Equipment ranges from small factory assembled units handling approximately 900 – 2500 cfm, with capacities of 2 – 5 tons, which may be used with supply and return plenums or ductwork, to the large component-selected units which handle from 2500 up to 63,000 cfm.

GENERAL DESCRIPTION AND APPLICATION

ARI Standard 430 defines central station air handling units as "...a factory made, encased assembly consisting of a fan or fans and other necessary equipment to perform one or more of the functions of circulating, cleaning, heating, cooling, humidifying, dehumidifying, and mixing of air, but which does not include a source of heating or cooling. This device is capable of use with ductwork of total static resistance of at least ¼" wg."

Under this broad definition, spray coil equipment would fall into the category of central station air handling units. However, spray type equipment falls outside the general scope of this presentation and the emphasis will be on air handling equipment using extended surface coils for cooling and heating functions but without sprays.

INTRODUCTION

- The load estimate establishes conditions air handlers must meet
- Air handlers establish conditions which the refrigeration equipment must meet
- Factory assembled air handlers are available from about 900 CFM to about 63,000 CFM

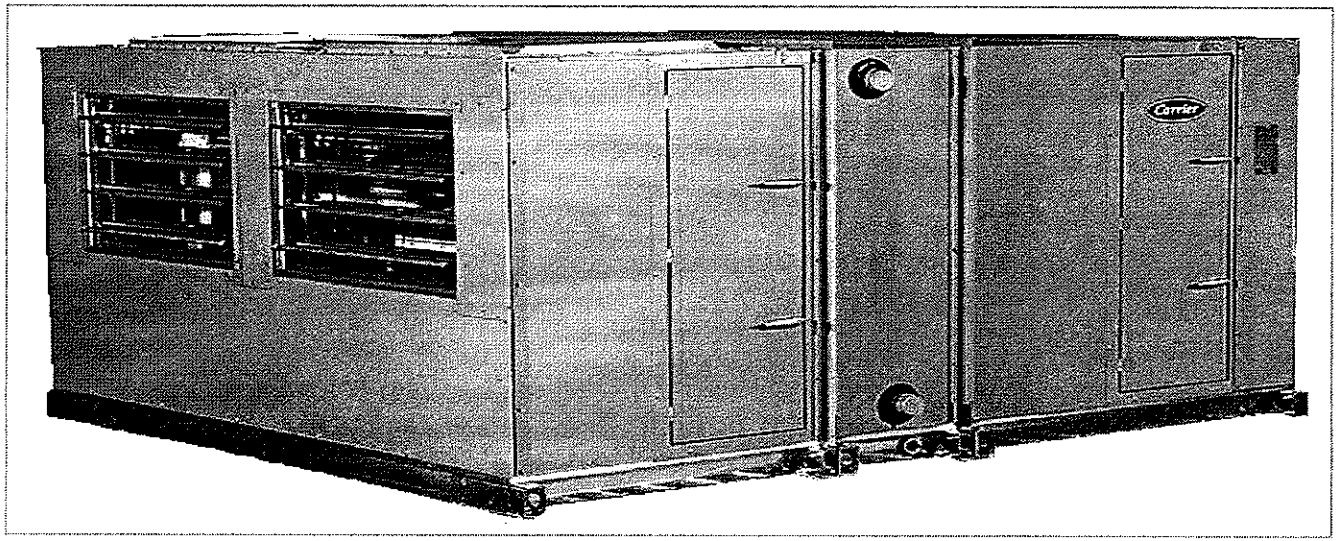

AIR HANDLER TYPES

Chilled water, hot water, or steam is delivered in a commercial system to coils. Air conditioning is accomplished by forcing air over the coil and then passing that air into a conditioned space. The coils end up in two basic types of equipment:
1- Room Fan Coil Units
2- Central Station Air Handlers

We will consider the **Central Station Air Handler** in this section. The position of the coil within the air handler varies depending upon the air handler style. Central station air handlers have selectable sections for air mixing, filtration, heating and cooling coils, fan, and accessories. The selectable sections are assembled together by the designer in a building-block fashion.

Three typical arrangements for the **fan section** relative to the **coil section** are shown below:

1- Horizontal Draw-Through
2- Horizontal Blow-Through
3- Vertical Draw-Through

If the fan is placed downstream of the coil section, the unit is called a draw-through unit. If the fan is placed upstream of the coil section, the unit is called a blow-through unit. When a special, 2-deck coil section is used with a blow-through unit, the unit becomes a double duct or multizone air handling unit.

The position of the fan and other components relative to the cooling coil varies with application, manufacturer, and capacity range.

AIR HANDLER TYPES

- **Central station air handlers are assemblies of selected sections**

CENTRAL STATION AIR HANDLING UNIT

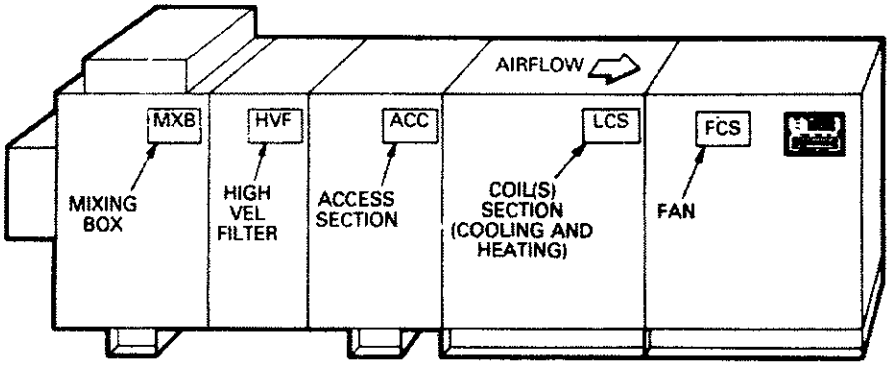

HORIZONTAL DRAW-THRU

- **Sectional components vary by application**

- **The coil section comes in three positions relative to the fan**

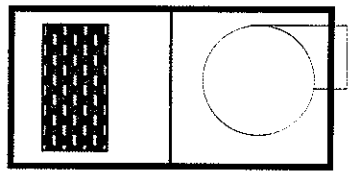

Horizontal Draw-Through

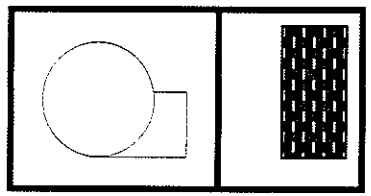

Horizontal Blow-Through

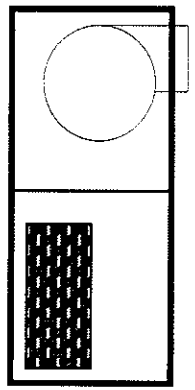

Vertical Draw-Through

BASIC CONSTRUCTION

A basic air handling unit, either blow-thru or draw-thru, consists of a number of factory-fabricated sections or modules which may be assembled in a variety of arrangements. Even though the number of sections used can vary greatly, the air handler will consist of at least a coil section and fan section. The page below shows a draw-thru air handling unit consisting of five basic components; a mixing box, filter section, access section, coil section and fan section. The mixing box mixes outdoor and return air, which is then filtered. The access section is a doorway into the air handler for routine maintenance, repair or cleaning. The coil section shown has a place where either a heating coil, cooling coil, or both may be inserted in order to heat or cool the air. The fan moves the air. The various components are identified in the order that the air flows through the unit. There are a number of accessory items that will be discussed later in this text.

A heating coil section may be a part of the unit but is usually not included as a part of the basic unit. Heating coils are considered accessory items and will be discussed briefly under Accessories. A complete discussion of heating coils and their selection is covered in Technical Development Program T200-36.

Unit casings are constructed of sheet metal panels on angles or channels or the casings may consist of panels which are designed so that they do not require a separate supporting frame. Some units are fabricated of steel and require painting to control corrosion. Those constructed of heavy gage, mill galvanized sheet are not normally painted since they are already adequately protected from corrosion. Most air handling units are treated for comfort applications. Special applications may require an additional casing coating to prevent corrosion. Fan and coil sections are normally insulated internally with one inch of fire-resistant glass. All casings on the leaving or downstream side of the cooling coil require insulation to prevent condensation on the panels. A spray coating of plastic or application of another erosion-resistant coating on the exposed surface of the insulation is desirable to prevent erosion or flaking at areas that are exposed to high velocity air.

BASIC CONSTRUCTION

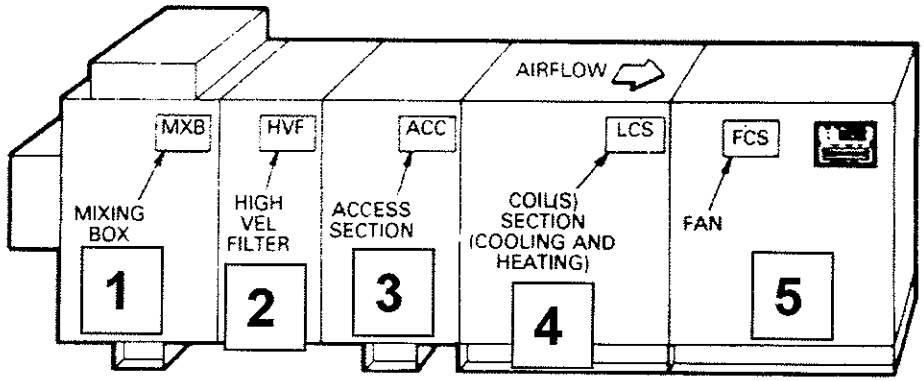

HORIZONTAL DRAW-THRU

Basic Components:

(1) - Mixing box (outdoor air mixes with return air)

(2) - High velocity filter section

(3) - Access section

(4) - Coil section (cooling and heating)

(5) - Fan section (forward-curved or airfoil)

Blow-Thru/Draw-Thru

The cooling coil condensate drip pan, which often serves a second function as the bottom panel for the fan and coil section, is usually insulated with ½ inch of waterproof, closed cellular foamed plastic. This insulation is securely fastened to the pan in a water-tight fashion and is needed to prevent exterior sweating due to cold condensate which is collected from the cooling coil.

On draw-thru units, the fan pulls or "draws" the air through the cooling coil; heating coil, filters and other components. Therefore, the condensate pan is on the negative pressure side of the fan. A liquid leg and condensate trap (liquid seal) is required to prevent "hang-up" of condensate in the pan and eliminates leakage of air through the condensate drain into the unit. The minimum height of the liquid leg which is required to maintain a water seal and still drain the condensate pan, depends upon the negative pressure of the unit.

On blow-thru units, the fan pushes or "blows" the air through the cooling coil, and often the heating coil as well. This puts the condensate pan on the positive pressure side of the fan.

A condensate trap is also necessary on a blow-thru unit to prevent air leakage from the unit through the trap. The liquid leg must be on the leaving side of the trap in this case since the condensate pan is on the positive pressure side of the fan and sufficient height must be provided to offset the pressure in the unit. The figure below illustrates these concepts.

Some engineers prefer a blow-thru air handler because the fan heat is removed before air is distributed to the conditioned spaces. It also eliminates inward leakage of duct air in casing sections down stream of filters. However, most engineers specify draw-thru units.

Blow-Thru/Draw-Thru

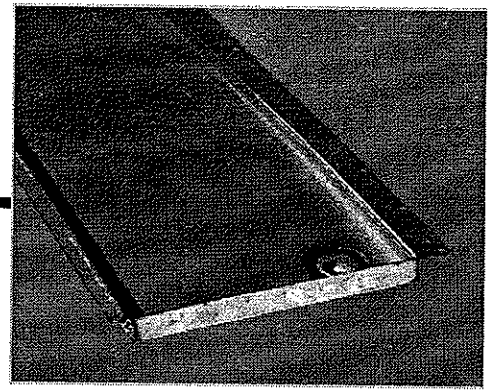

- **Draw-Thru**

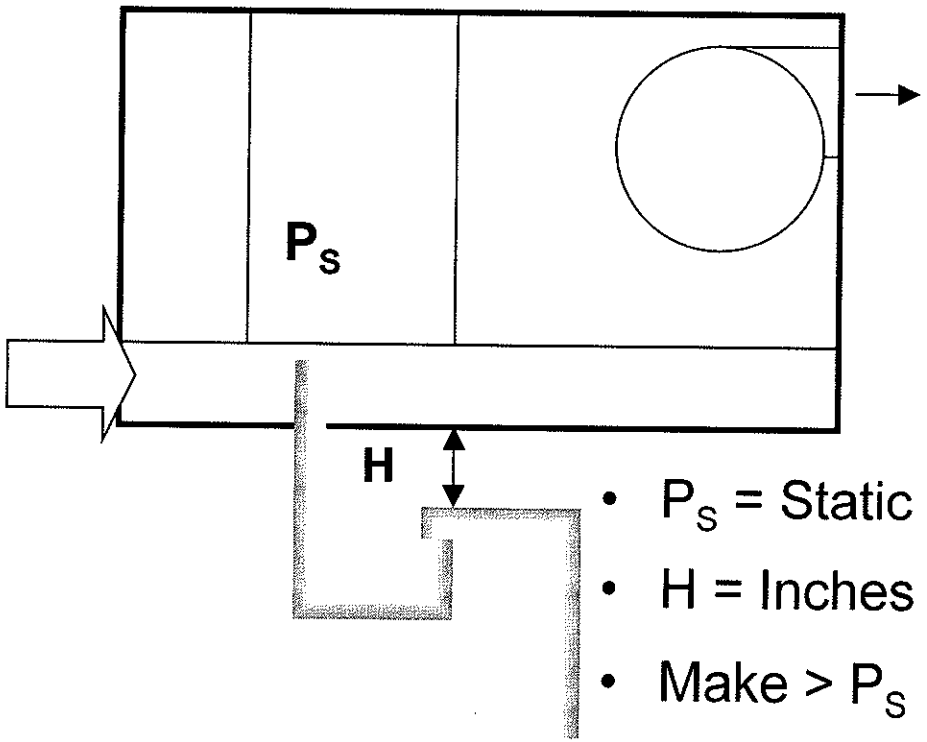

- **Blow-Thru**

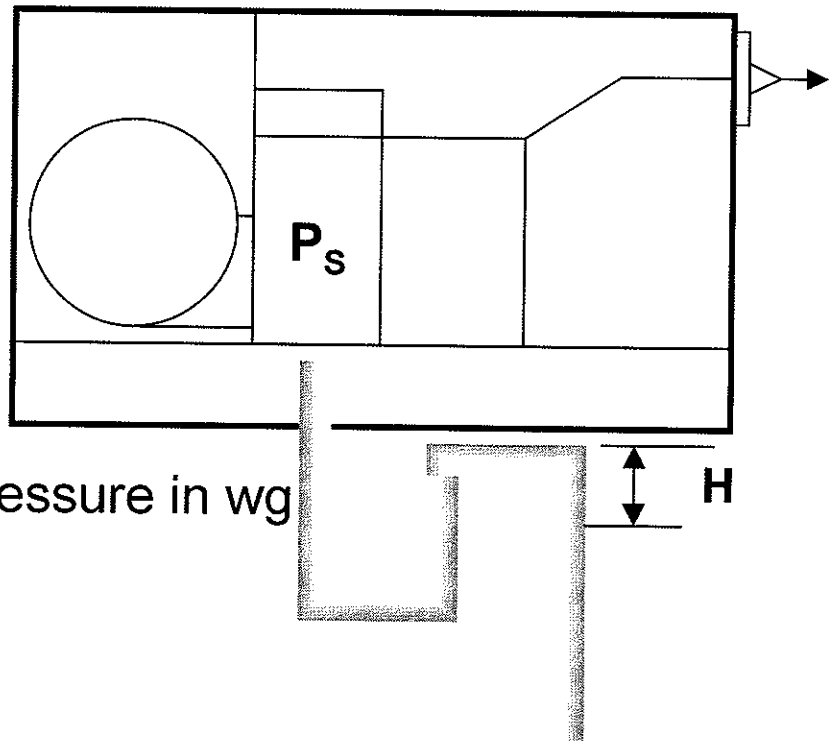

- P_S = Static Pressure in wg
- H = Inches
- Make > P_S

H = height from fan to top of trap = available static head from trap

COOLING COILS

Cooling coils are designed for use with chilled water (called chilled water cooling coils) or with an evaporating liquid refrigerant ("direct expansion" also called "dry expansion" or "DX" cooling coils). These are available in a variety of row depths, fin spacing, fin design, fin material, circuits and, in the case of DX coils, a variety of coil split arrangements.

Coil row offerings may vary from 2 to 12 rows with 4, 6, and 8 being predominantly used in the comfort air conditioning industry.

Fins are mechanically bonded to the tubes of a coil to increase its effective heat transfer surface area. Common spacing intervals are 8 and 14 fins per inch of tube length. Two basic fin types are commonly used. The first and earlier method involves a spiral fin design, where a thin strip of fin material is helically wrapped under pressure about each tube of the coil. The more recently developed method utilizes a plate fin design where the coil tubes are inserted through sheets of fin material which are appropriately spaced. Each coil tube is expanded after insertion to achieve a mechanical bond with the fins. For more detail on coil fins, as well as a picture of spiral and plate fins, please see 'Coil Surface Types" back in the "Water Coils" tab.

Aluminum and copper are the materials used almost exclusively for both the tubes and fins of cooling coils, with copper tubes being used for the vast majority of commercial comfort applications. Aluminum fins are used most extensively for air conditioning duty. Copper fins, being more expensive, have limited usage but are definitely required as a minimal precaution against coil corrosion in applications where the coil is exposed to airborne materials such as hydrogen sulfide, sulfur dioxide or (in high concentrations) carbon dioxide. Where water is sprayed on coils, copper fins are usually preferred, although aluminum fins on copper tubes have been used for this application with success when the water supply is non-scaling and non-corrosive. Highly corrosive atmospheres, such as those encountered in many industrial process applications, may require special coil coatings to insure protection beyond that afforded by copper fins. Each of these situations should be individually analyzed with the aid of consultation from the equipment manufacturer. A more detailed description of coil construction features, their circuiting, performance, etc. is the subject of Technical Development Program T200-22B "Cooling Coil Performance."

COOLING COILS

- **Cooling Coils**
  - Direct expansion (DX)
  - Chilled water
  - Variety of rows, fin spacing, and circuits
- **Materials (Standard)**
  - Aluminum fins
  - Copper tubes
  - Mechanically bonded

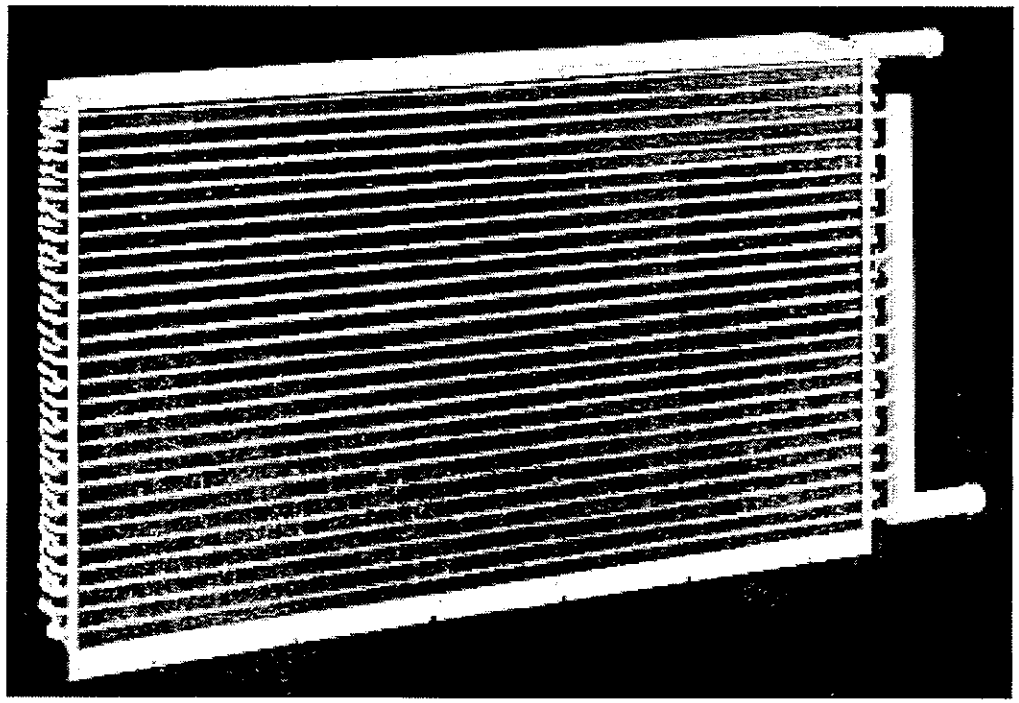

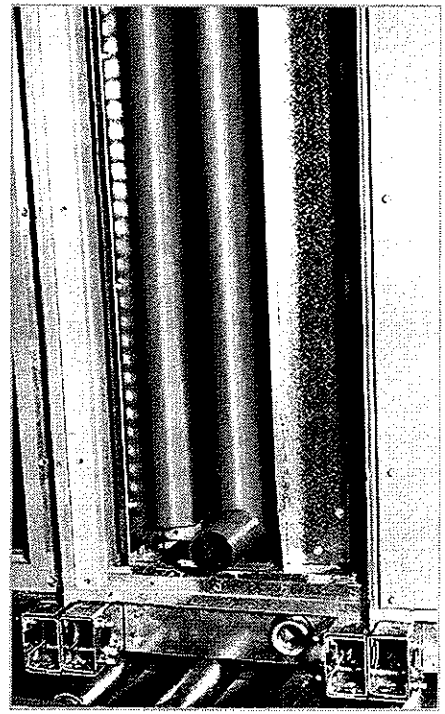

COIL PLACEMENT

The cooling and heating coils are located within the coil section of an air handler. The relative position of the heating coil to the cooling coil in the coil section depends on the use of the heating coil in the HVAC system. The heating coil may be installed in the same coil section as the cooling coil or it may be installed in a separate heating section of its own.

Preheat Coil:

In Northern climates when a high percent of cold outdoor air is being drawn into the coil section, there is a possibility that the chilled water coil can be frozen. To protect the chilled water coil, a heating coil is placed upstream of the cooling coil as a "preheat" coil. The preheat coil heats the outside air above the freezing point before passing it on to the air handler.

Another method, is to place a preheat coil in the minimum outdoor air section of the air handler as opposed to the coil section.

Another practice is to provide two preheat coils in the air handler. One coil is placed in the outdoor air duct and heats the outdoor air above the freezing temperature. The second preheat coil is located in the coil section and heats the mixture of outdoor and return air to the desired leaving temperature.

Reheat Coil:

When the heating coil is placed downstream of the cooling coil it is called a reheat coil and may serve two functions. When the chilled water coil is controlling humidity it may overcool the air in an attempt to reduce the air's humidity level. The reheat coil adds heat to the supply air in order to prevent overcooling the conditioned spaces.

The coil may also serve as a heating source for the conditioned space during cold weather when heating is required.

Fluid Mediums:

For cooling, chilled water or brine is the fluid being pumped around a building. For heating, the fluid is either hot water or steam, and in some cases no fluid at all - electric heaters being employed as heating coils.

COIL PLACEMENT

- **Coil Section:**
  - **Cool Coil**
  - **Heat Coil**
- **Heat Coil Positions:**

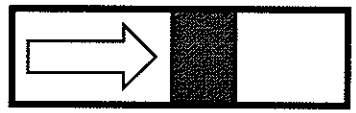

Preheat Coil

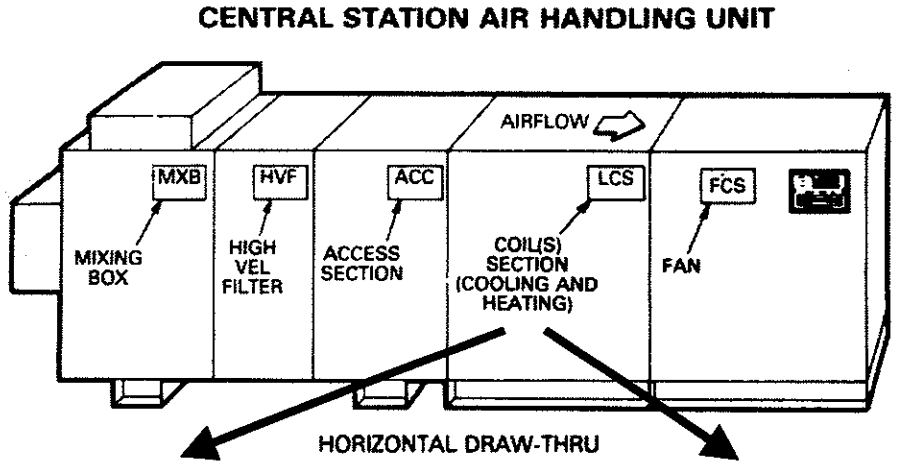

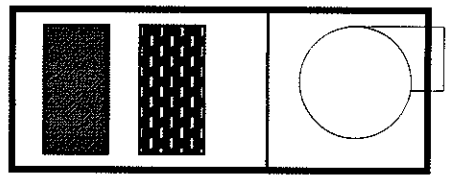

Preheat Coil

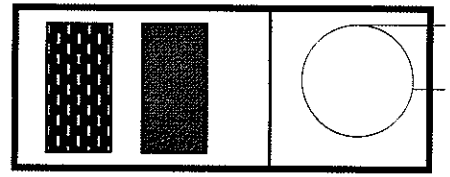

Reheat Coil

- Separate heat coil section available
- **Preheat coil can also be placed In outdoor air duct as freeze protection**
- **In coil section, heating coil can be a preheat coil - freeze protection**
- **In coil section, heating coil can be a reheat coil - reheat during humidity control, or heating**

FANS

Air handling units applied for comfort air conditioning make almost exclusive use of centrifugal fans. There are four basic centrifugal wheel designs which make up the four basic types of centrifugal fans used in central station air handler fan sections. All of them use double-wide, double-inlet (DWDI) fan wheels which are made up of two, single-width, single-inlet (SWSI) wheels fastened together, back to back.

The backward curved blade fan may have either a flat inclined blade ("backward inclined" type), a curved blade ("backward curved" type) or an airfoil type ("backward curved airfoil" – or simply "airfoil"). The backward inclined type has a flat, single thickness metal blade while the backward curved type has a curved, single thickness metal blade. The airfoil design utilizes a double thickness metal blade designed to improve the efficiency of air flow through the wheel. Its use is restricted to applications where savings in operating cost outweigh its higher first cost.

Each of the backward curved fan types have blades whose tips point in a direction opposite their direction of rotation.

The fourth type illustrated is the forward curved fan. Its blades are curved, single thickness metal with the tips pointing in the same direction as the rotation of the fan wheel.

FANS - FOUR BASIC TYPES

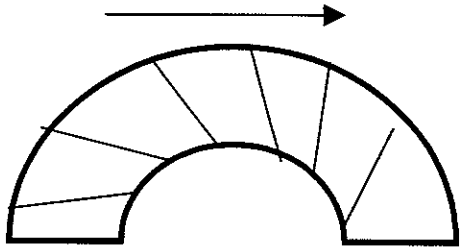

- Backward Inclined

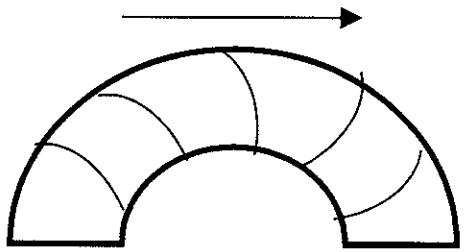

- Backward Curved

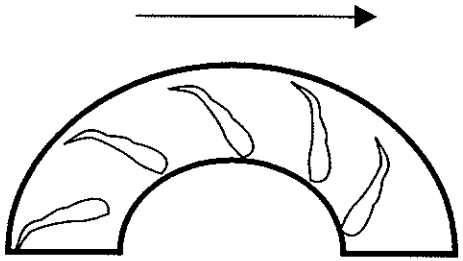

- Airfoil

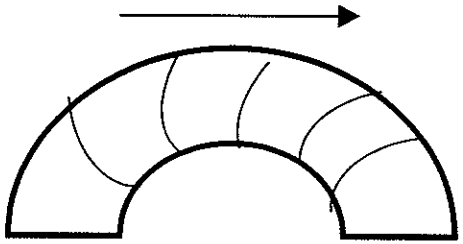

- Forward Curved

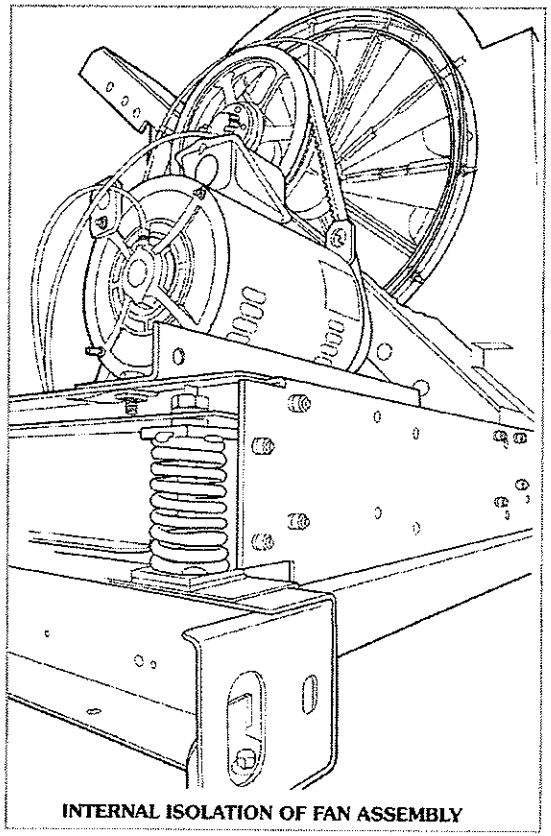

INTERNAL ISOLATION OF FAN ASSEMBLY

CENTRIFUGAL FANS

Shown below is a typical forward curved and airfoil fan wheel used in central station air handling equipment. A greater number of smaller, lighter duty blades make up the forward curved wheel. The other parts of the fan (e.g. the fan shaft, bearings, fan supports) are also constructed of lighter duty material than that used for the airfoil wheel (or a comparable backward curved wheel). By the nature of its design, the forward curved fan can deliver substantially greater air quantities at lower rotational speeds than a backward curved fan of the same diameter. When delivering the same cubic feet per minute at the same static pressure as that for a backward curved fan of any type, the forward curved fan will run at approximately one half the speed of that required for the backward curved fan. This feature makes the forward curved fan quieter and, when coupled with its lower price, makes forward curved fans the most popular choice for low to medium pressure applications.

There are instances in high capacity, high pressure applications when backward curved fans operate more efficiently than forward curved fans. Many medium pressure applications can also benefit from the efficiency of a backward curved fan.

Double width, double inlet forward curved, backward inclined and backward curved airfoil centrifugal fans are typically used in factory-assembled central station air handlers. Since the fan is built into the fan section cabinetry at the factory, once the air handling unit size is established, so too is the size of the fan. Manufacturers normally offer two or three fan wheel types in each unit size so that the static pressure range normally encountered by central station air handling equipment can be accommodated with reasonable efficiency.

Low and medium pressure units (0" to approximately 5" total static pressure) normally utilize forward curved and/or backward curved fans. Some manufacturers handle this static pressure range with a separate low pressure and medium pressure fan. In this situation, a forward curved type is used for the low pressure unit while either a forward curved or backward curved fan is used for the medium pressure application. Other manufacturers cover the entire low and medium pressure range with a single fan type (typically forward curved).

High pressure applications (5" to approximately 9" total static pressure) require the heavier construction, higher static efficiencies and greater static pressure capabilities of either a backward inclined or backward curved airfoil fan.

Once an air handling unit size is established, the air volume and static pressure required by the fan will determine which fan type(s) is (are) acceptable. Fan ratings, displayed in either tabular or fan curve form, will frequently indicate more than one acceptable type. At this point, the system designer must select the best fan for the application at hand considering first cost and operating cost at both design and reduced load conditions.

CENTRIFUGAL FANS

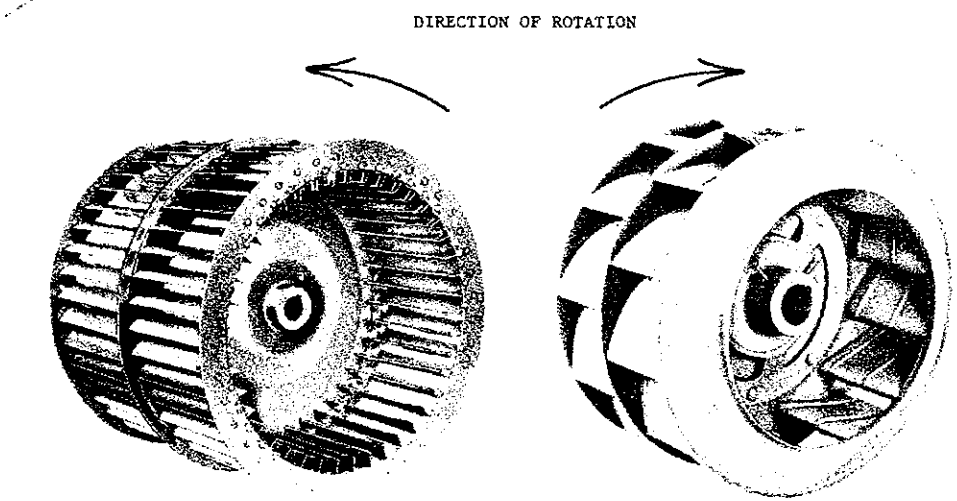

- **Forward Curved**
  - Lighter construction
  - Large cfms at low speeds
  - Low pressures (< 5.0 in wg)
- **Airfoil**
  - Higher pressures (>5.0 in wg)
  - Higher efficiencies
  - Heavier construction

FAN SECTIONS

Fan section designs vary from manufacturer to manufacturer. Show below on the left is a single fan forward curved fan section. The cutaway view indicates a motor and drive assembly mounted within the fan cabinet. With this internal drive and fan support arrangement, the fan shaft is relatively short and the bearings are within the air stream. Another approach to fan section design is shown on the right. It involves a motor and drive assembly external to the fan casing. In this situation, either a single wheel or multiple fan wheels are fastened to a longer fan shaft which extends through the fan section casing with bearings mounted either on the casing wall or external to it. The fan cabinet tends to be smaller than for internally mounted drive, but the space required for installation and maintenance of the air handling unit may not be smaller. The industry trend over the last 3 decades has been toward internally mounted drive and motor.

FAN SECTIONS

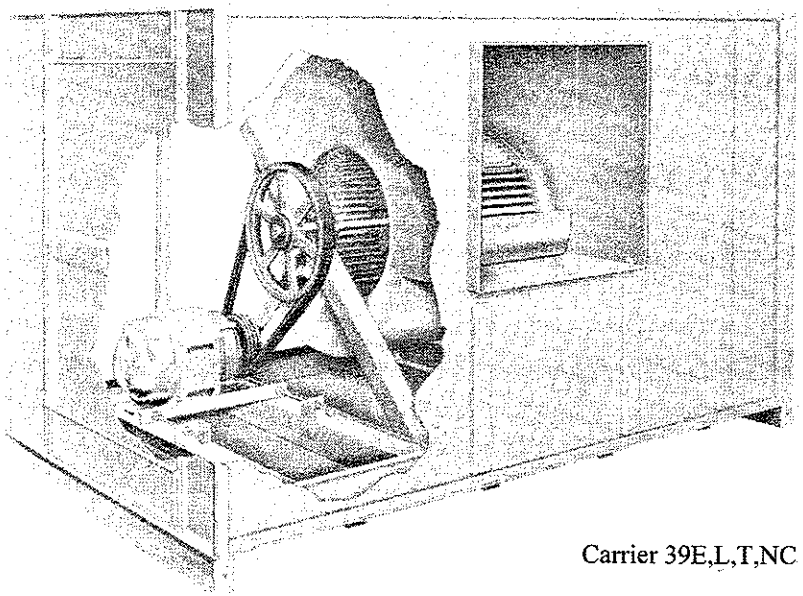

Carrier 39E,L,T,NC

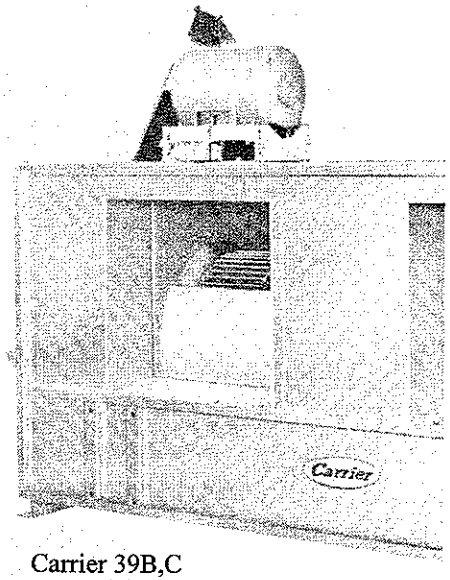

Carrier 39B,C

- **Vary from manufacturer to manufacturer**
- **Drives are mounted:**
  - **Internally or**
  - **Externally**

VOLUME CONTROL

Central station air handling fan sections have long been a choice for variable air volume (VAV) systems. In these systems, fan capacity reduction is beneficial for reduced load situations, especially when resulting drive power input reductions can be realized. These devices are static pressure control mechanisms which limit duct static pressure buildup as VAV terminals throttle closed. Variable inlet vanes and fan discharge dampers are two common fan accessories which make this possible with central station air handlers. However, fan discharge dampers are seldom practical for air foil or backward-curved fans, and they offer no additional energy savings. Variable inlet vanes are a popular, low-cost option which work well and enhance capacity. Variable speed fan drives offer the ultimate in energy saving, at a higher initial price. Of these, variable frequency drives (VFD) are quite popular.

Shown below is a close-up view of a typical variable inlet vane assembly (also called inlet guide vanes). This is fastened to the inlet of the fan and is controlled from a fully open to fully closed position by a static pressure regulator in the supply ductwork system. A pneumatic or electric damper operator moves the control arm to modulate the vanes. Variable inlet vanes are applied to only backward curved types of fans. They reduce the fan capacity and required brake horsepower by adding pre-whirl to the air as it enters the fan inlet.

Fan discharge dampers applied to forward curved fans reduce fan static pressure delivered to the supply ductwork system. As with the variable inlet vane approach, control is achieved by means of a static pressure regulator.

Specific information regarding fan capacity control as it pertains to variable volume systems can be found in the Carrier "Application Manual for Variable Volume System." For additional general discussion of fans and fan performance, refer to the Carrier System Design Manual, Part 6.

VOLUME CONTROL

Variable Inlet Vanes

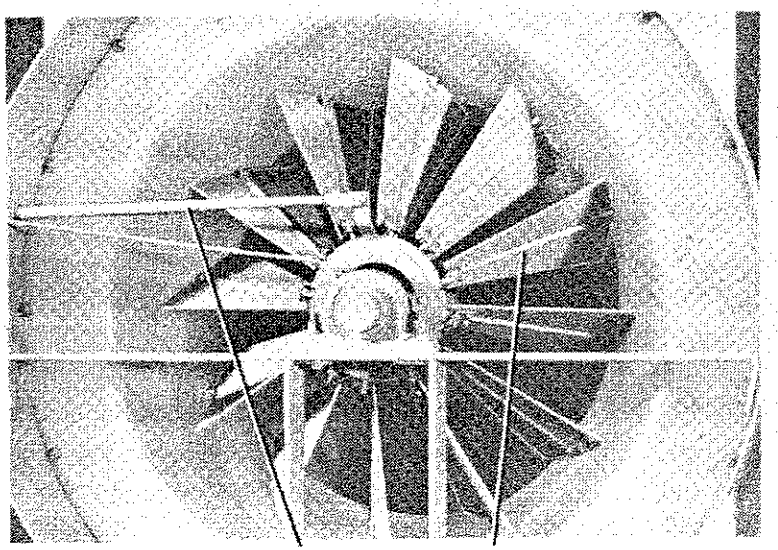

Fan Discharge Dampers

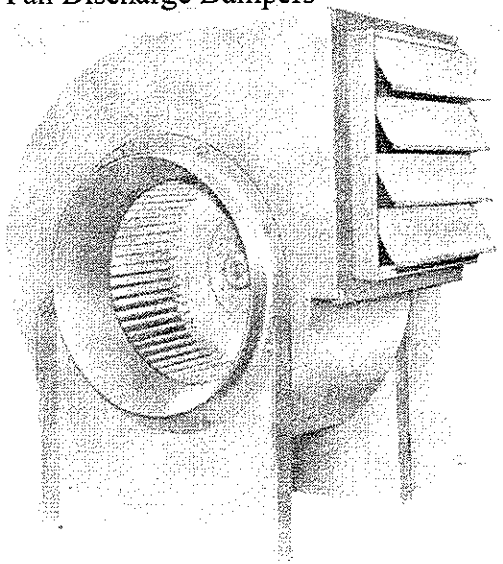

- **Central Station AHU's traditionally applied on VAV systems**
- **Fan volume control required:**
  - **Inlet guide vanes (IGV), also called variable inlet vanes (VIV)**
  - **Discharge dampers**
  - **Variable speed fan drives (especially variable-frequency drive)**

Beyond Fan-Coil

Most air conditioning jobs today require more than just the fan and coil sections. A means for mixing, heating, cleaning, and humidifying the air, as well as for controlling room air conditions are desirable for air handling units. Therefore, a number of accessory components are available which may be used to provide these functions. Much of the flexibility of application which central station air handlers possess comes from the variety of basic unit components (fan types, coil types, etc.) as well as accessory items which are offered with the unit. Flexibility is further enhanced by the diversity of component configurations available.

The figure below shows how the components are typically arranged in a draw-thru central station air handling unit.

Beyond Fan-Coil

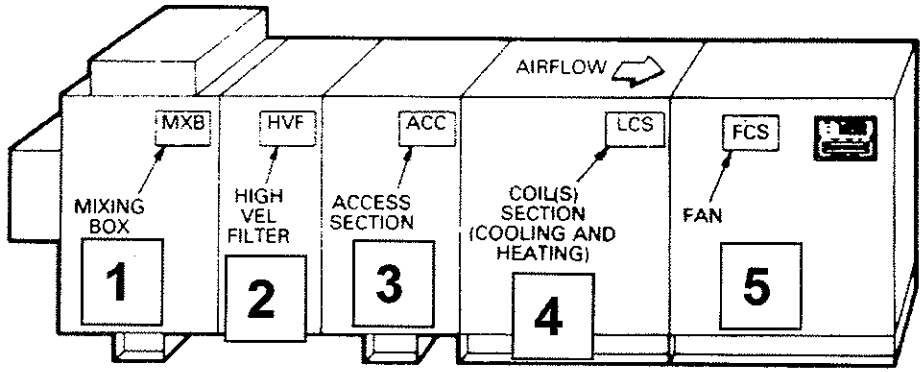

HORIZONTAL DRAW-THRU

- Application needs require a variety of unit components, beyond the fan and coil sections

- Shown above are some typical sections for a draw-thru unit:
  - (1) - Mixing box (outdoor air mixes with return air)
  - (2) - High velocity filter section
  - (3) - Access section
  - (4) - Coil section (cooling and heating)
  - (5) - Fan section (forward curved or airfoil)

HEATING COILS

Heating coils are commonly included in the same air handling unit that provides cooling and are designed to heat air under forced convection. As an alternative, heating coils may be located in outdoor air or supply air ductwork. The energy sources used in heating coils include steam, hot water, and electricity. These coils are used for primary heating (with cooling coil off); preheating (heating upstream of the cooling coil); and for tempering or re-heating (heating downstream of the cooling coil with the cooling coil active). The air velocity through the coil is determined by a space limitation for the coil but is not recommended beyond the manufacturer's limits, which are typically about 400 550 to 550 fpm. The number of rows and fin spacing is determined by the temperature rise required by the job.

HEATING COILS

- Commonly used with central air handlers
- Energy Sources:
  - Hot water
  - Steam
  - Electric
- Used for:
  - Primary heat (cooling coil off)
  - Preheat (Upstream of cooling coil)
  - Re-heating (Downstream of cooling coil)
- Air velocity
  - Typically ~~400~~ 550 to ~~550~~ 800 feet per minute (FPM)
  - As high as 1,200 FPM

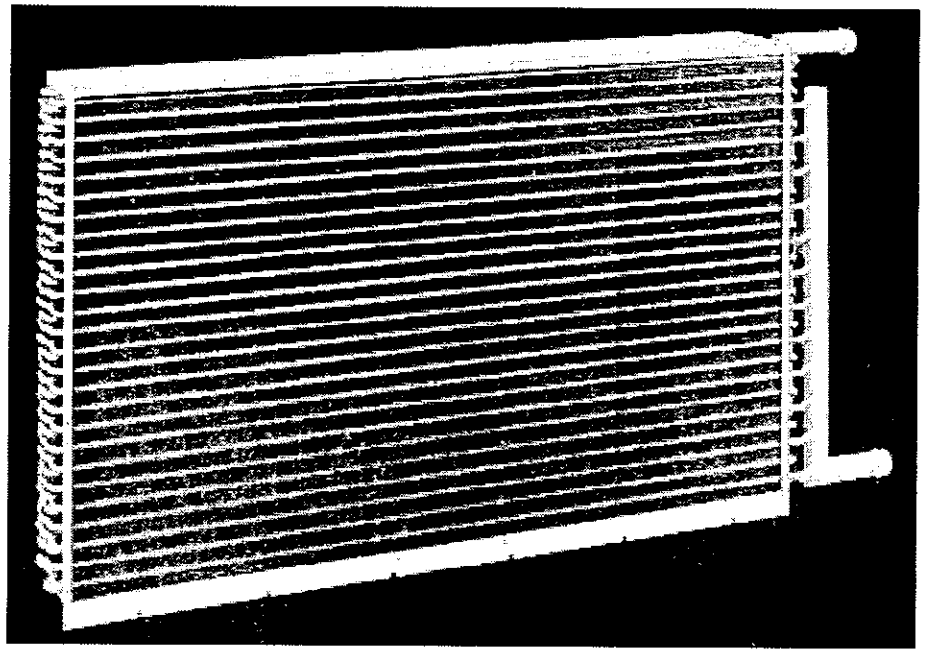

- Construction:
  - Rows
  - Fin spacing
  - Face area
- Aluminum fins with copper tubes

FILTERS AND CONTAMINANTS

The central station air handling unit is usually required to provide a means for the removal of contaminants from outside as well as recirculated air. Without filtration, contaminant buildup within the components of the air handler and within the air conditioned space could reach troublesome proportions.

The efficiency of air filtration is a matter of engineering design which is oriented to the application for which the space is intended. The particulate matter which filters are intended to remove varies from leaf-size particles all the way down to objects as tiny as bacteria and viruses. The figure below shows a variety of particulate contaminants, and the recommended means of removing them. Filters are the conventional means for reducing contaminant concentration.

Multiple filter designs have been developed, each offering a different efficiency to accommodate different applications. Each manufacturer of central station air handling equipment offers their own line of filtering systems designed for easy installation with their equipment. The efficiency range and types of filtering systems offered may vary from manufacturer to manufacturer but some of the most commonly used types will be described below.

FILTERS AND CONTAMINANTS

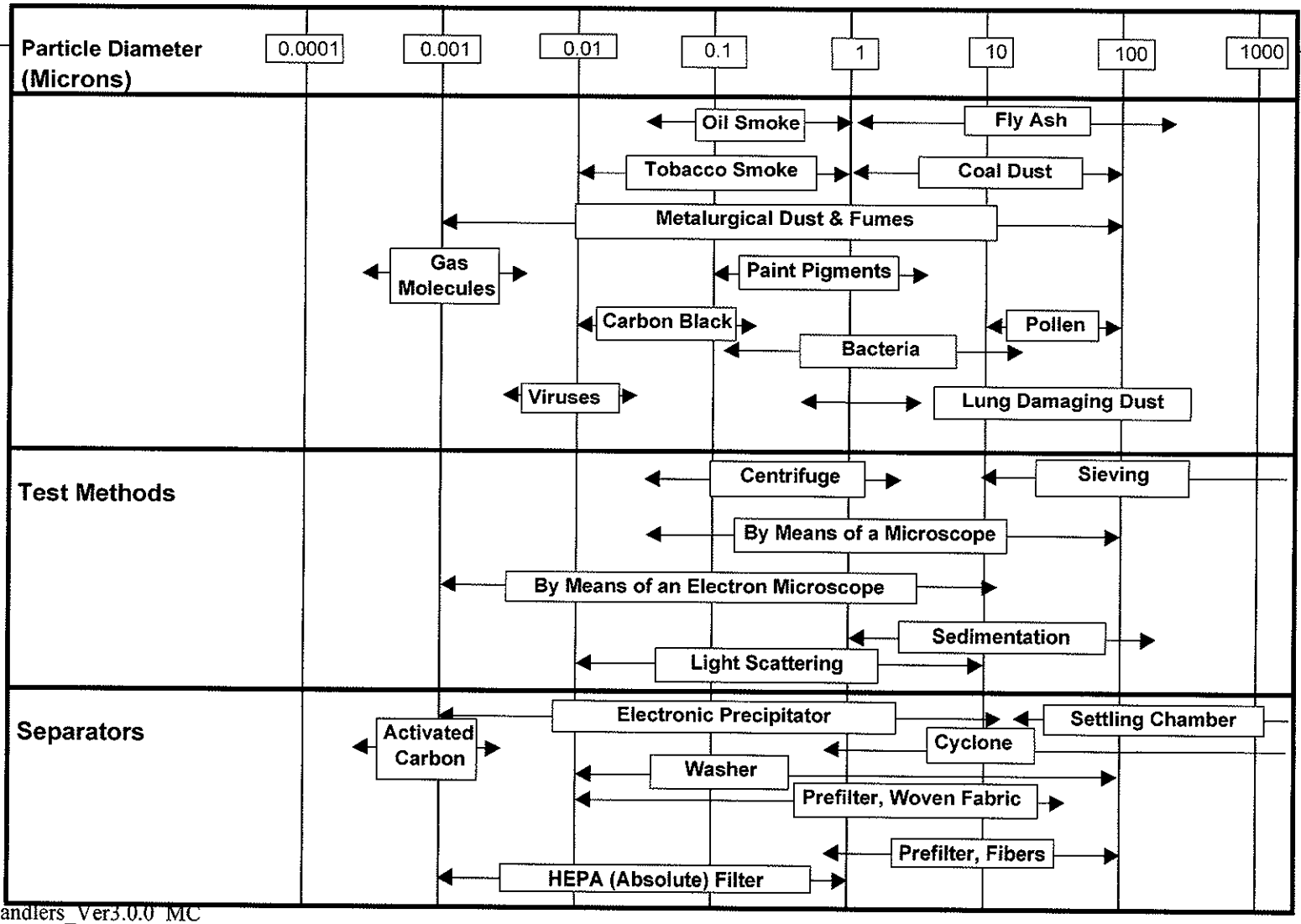

PANEL FILTERS

This is the most commonly used type of filter in the comfort air conditioning industry today. Panel filters achieve what is generally categorized as low efficiency filtration. This typically represents the minimum acceptable quality of filtration for comfort air conditioning applications. As its name implies, these filters have a flat, rectangular shape. A number of standard rectangular sizes are available, typically in depths of one or two inches. Most equipment manufacturers design filter sections which utilize this filter type to accept a number of these in a size which is readily available for field or factory purchase.

Panel filters are designed in both throw-away and permanent types. The throw-away type usually has cardboard frame, with either metal or plastic perforated screens for the entering and leaving air sides. The filtering media can be made from any of several types of fiber fill; spun glass fiber and hemp fiber being two commonly used types. Frequently, the density of the fill increases from the entering to the leaving air surface of the filter. An adhesive coating is usually applied to the filter media, while the filter is being made, to improve its particle holding capability.

The design of a permanent style panel filter is very similar to that described for the throw-away. The major difference is that the framework and filter media are metal. Shown below are two typical, throw-away panel filter types.

Panel filters are usually installed on the intake side of the fan upstream of the coil(s). In this position they are called pre-filters. They can also be installed downstream of the coils, in which case they are called after-filters. They may function as either high velocity or low velocity filters depending upon their configuration in the filter cabinet in which they are installed

Panel type filters are arranged in a series of V-banks to achieve air velocities across the filters lower than at the cooling coil. Typical filter face velocities of 350 feet per minute or below enable the panel filter to operate more efficiently than in a high velocity application. As with most types of filter sections, access to the low velocity filter section for filter replacement or servicing is accomplished by means of an access door at the end of the casing.

A high-velocity filter section orients the panel filters in a straight vertical manner. This arrangement gives the high-velocity filter section a considerably shorter airway length than a low velocity filter. The velocity through the filters approximates that for the cooling coil. Normal velocities range from 400 to about 700 feet per minute.

PANEL FILTERS

- Most commonly used for air conditioning
- Minimum filtration capability
- Variety of shapes, depths, and sizes
- Throw-away:
  - Cardboard frames (shown)
  - Metal or plastic screens
  - Fiber or spun glass fill
  - Adhesive coating
- Permanent
  - Metal frame and filter media
  - Cleanable

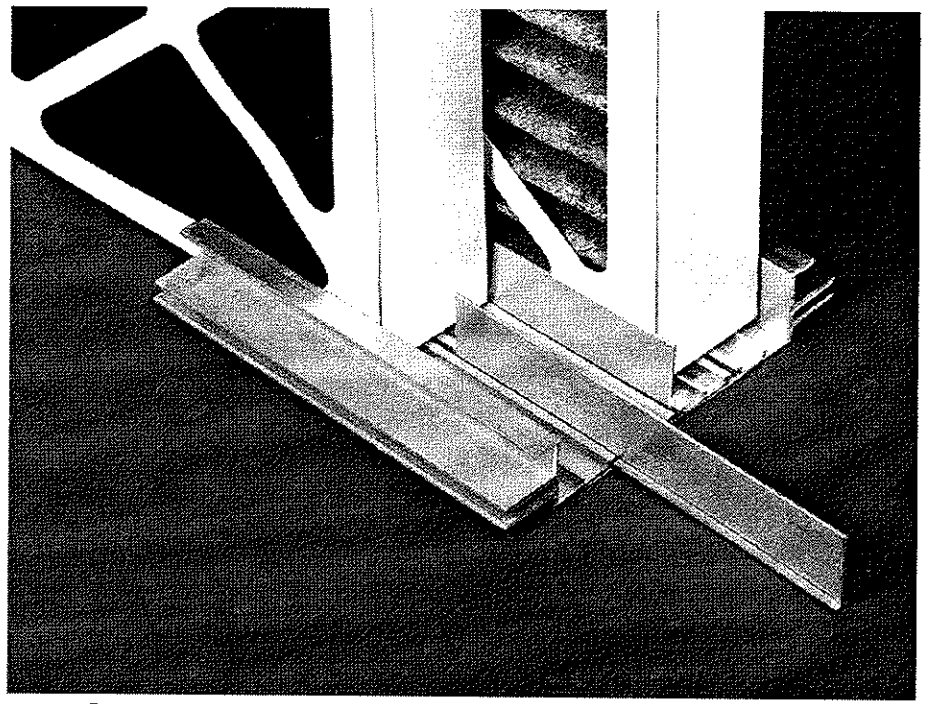

- Low velocity in "V" arrangement
  - Up to 350 fpm
- High velocity in vertical arrangement (shown above)
  - 400 to 700 fpm



TYPICAL FILTER OPTIONS

- **Extruded aluminum flat filter track accepts combinations of 1" and 2", or 4" filters**

- **Downstream filtration (after-filters)**
  - Farr type 8 permanent filter
  - Welded and sealed frames

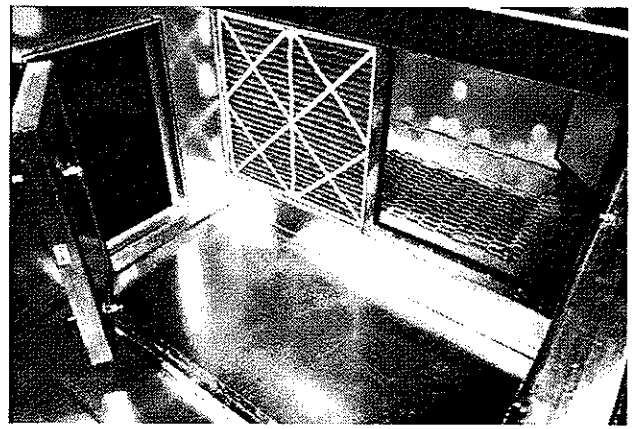

- **Upstream filtration (pre-filters)**
  - Low-velocity extruded angle filter
  - Bag/cartridge filter and flat filter

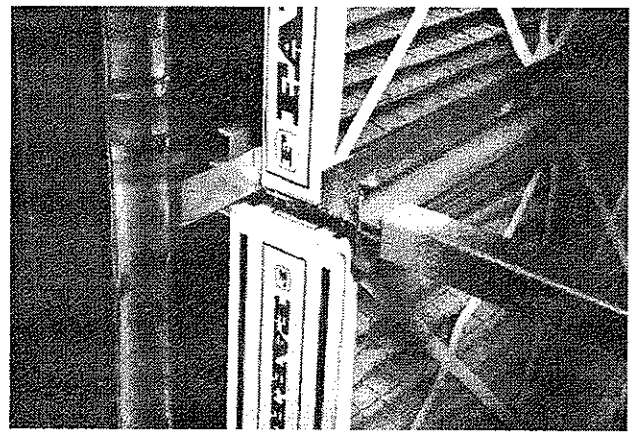

BAG FILTERS

One alternative to panel filters, which offers medium to high-efficiency filtration is the bag filter. These are intended to remove fine dust particles which cause surface soiling. Shown below is a bag filter ready to be slid into the filter track of a bag filter section on a central station air handler.

The bags are constructed of a special blend of paper and fiber in the shape of a bag. This shape creates an extensive filter surface area, which results in very low air velocities across the filter. Standard as well as extra length bags are typically offered, the latter being used where higher velocities or tighter filtration requirements exist.

Once loaded, the bag filters are discarded. Since these filters have a higher efficiency and more complex design than panel or roll type filters, they cost considerably more. As a result, high velocity pre-filters are usually used to remove large particulate matter so that the frequency of change for the bag filter can be reduced.

BAG FILTERS

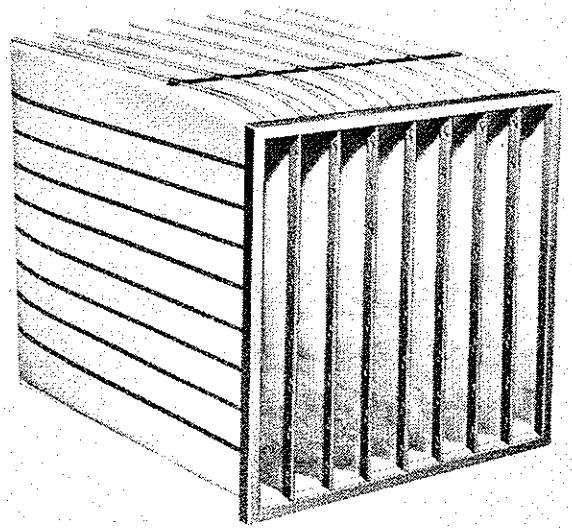

- Medium to high-efficiency
- Removes "fine" dust particles
- Greater filter surface area
  - Lower velocities
  - More dirt absorption
- Expensive
- Throw-away when dirty
- High velocity pre-filters extend life of bags

ROLL FILTERS

Shown below is a roll filter section with access doors removed for servicing the filter roll. This method of filtration basically represents easily changed, high velocity filtration with throw-away type media which has several filter changes contained in a single roll.

The filter media used is typically about two inches thick and is held in place by a wire mesh screen. When the media becomes dirty it is advanced either manually or automatically. Automatic advancing is popular since it optimizes the reduced maintenance nature of the roll filtering method. An additional benefit of the roll filter is its higher filtering efficiency as compared with panel filters. The roll filter's efficiency rating falls approximately midway between low and medium rated types.

ROLL FILTERS

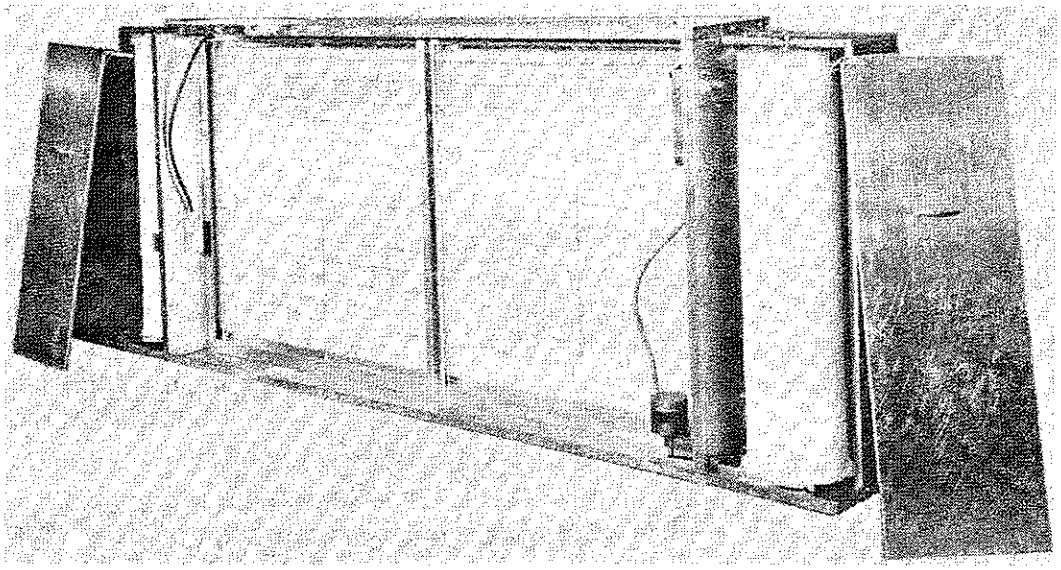

- High velocity filtration
- Throw-away media
- Several changes in a single roll
- Automates & simplifies filter maintenance
- Normally 2 inch thick media
  - Held in place by metal screen
- Manual or automatic advancement
- More efficient than panel filters
  - Low to medium efficiency

ELECTROSTATIC & HEPA FILTERS

ELECTROSTATIC FILTERS

Some plastics have naturally occurring, residual electrostatic charge which can be passed on to things that come in contact with them. An electrostatic filter is a passive filter (i.e. without electrical power input). It should not be confused with an electronic filter which is activated by electricity. Electronic filters are rarely closed for commercial jobs.

The electrostatic filter removes particulate matter from the air by placing an electrical charge on particles and collecting them on electrostatically charged surfaces. Efficiencies for this type of filtering method are comparable to that of bag filters. Saving the replacement media cost associated with bag filters makes the electrostatic filtering method attractive for certain applications. A disadvantage of electrostatic filters is that they load up quickly, creating a substantial air pressure drop.

There are currently very few central station air handling manufacturers who offer electrostatic filters as a part of their standard commercial product line. When used, they are purchased from one of the filter manufacturers as an after market item. They slide in the same filter tracks designed to receive panel or bag filters. Use of electrostatic filters is predominantly restricted to the residential and light commercial markets.

HEPA FILTERING

The letters H E P A stand for High Efficiency Particle Arrestance. These filters are also referred to as "absolute" filters since they achieve efficiencies of 99.97 percent. Glass-asbestos is used as the filtering media in HEPA filters. Applications for this type of filter include hospital operating rooms, research laboratories, pharmaceutical plants and any other applications where atmospheric contamination must be prevented.

While panel and roll filters are most common on the upstream side of the air conditioning apparatus, high efficiency filters such as electrostatic filters, bag filters, and especially HEPA filters, are frequently used as "after" filters. In such an installation, a lower efficiency filter is applied upstream of the apparatus, to prevent contaminant build-up on the air handler

ELECTROSTATIC & HEPA FILTERS

Electrostatic:

- Electrostatically charged particles cling to filter media with opposite charge
- Efficiency similar to bag filters
- Permanent and cleanable
- Usually purchased as after market item
- After filters
  - Preceded by upstream low efficiency filters

HEPA

- High efficiency particle arrestance
- Absolute filters
- 99.97 % efficient
- Glass-asbestos media
- Usually after filters
  - Preceded by upstream low efficiency filters

FACE AND BYPASS

Another accessory which may be used with an air handling unit is a face and bypass damper section. Two sets of dampers are installed, generally in one section; the face dampers are located directly in front of the cooling coil and the bypass damper located above the coil. When the bypass dampers are open, the face dampers are closed and vice versa. The bypass damper and air passageway may be outside the normal air handler casing, as shown below, or it may be within the casing. The maximum quantity of air that can be bypassed is determined by the size of the bypass passageway. Consult the manufacturer's product literature for each specific situation.

The face and bypass arrangement permits air to bypass the cooling coil for part load control. A more detailed description of the application and performance of face and bypass control is presented in T200-26, "Control Principles and Methods."

On applications employing face and bypass sections, the fan selection and air distribution system must be designed for an air quantity 10% above design dehumidified air volume. This additional air quantity compensates for leakage through a fully closed bypass damper and for air quantity variations when dampers are in intermediate positions.

FACE AND BYPASS

- Two sets of dampers
  - Coil dampers (face)
  - Bypass dampers
- Partial cooling load control method
- Bypass the cooling coil at part load
- Bypass may be outside or inside normal AHUcasing
- Maximum limit on bypass cfm
- Fan and air distribution system oversized by 10%
  - Damper leakage

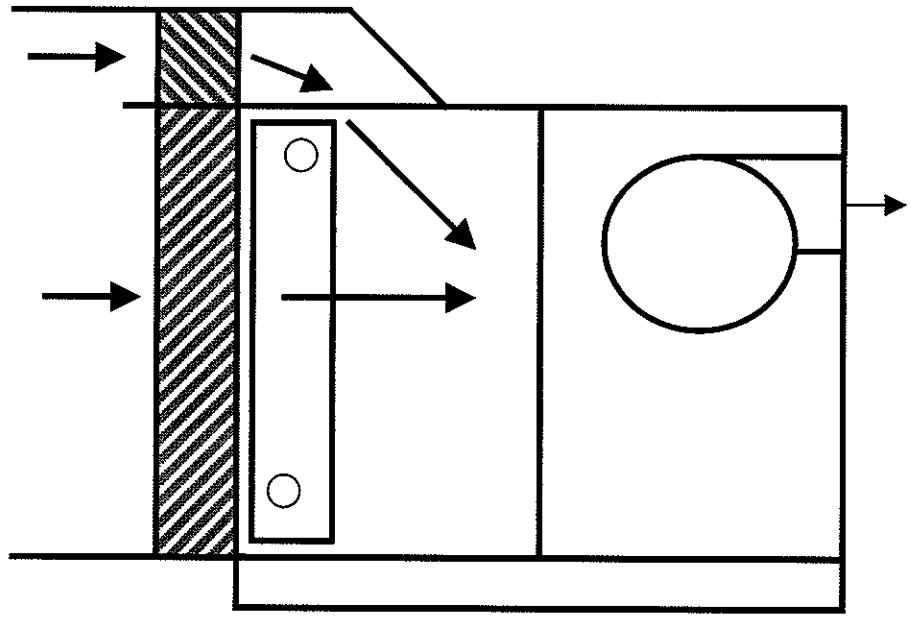

HUMIDIFIERS - FOUR TYPES

In cold weather, moisture constantly flows from the conditioned space to the drier outdoor air. In addition, drier outdoor air is brought in for ventilation and leaks in by infiltration. Therefore, humidification in winter is another function that air handling equipment must be able to provide. Four devices may be used for this purpose.

The steam pan humidifier consists of a pan, a float valve for water make-up and a steam coil which is used to heat and evaporate water from the pan. A conveniently located drain plug is provided for pan drainage as required for service or shutdown of the unit. The steam pan humidifier is normally located in the heating coil section, downstream from the cooling coil.

The spray humidifier section consists of a header and spray nozzles with a strainer which may be field installed. The sprays operate on a city water pressure of 15 psi or more. The humidifier should be installed directly ahead of the chilled water coil, permitting unevaporated mist to be eliminated from the airstream by the cooling coil by flowing to the condensate pan and out through the condensate piping. Spray humidifiers may result in dust accumulation in the occupied space if the supply water has any dissolved salts. Spray humidifiers may be used with copper or aluminum finned coils when naturally soft city water is available. If the water is contaminated, dissimilar fin and tube materials may result in a significant reduction of coil life due to corrosion. When industrial gases such as hydrogen sulfide, sulfur dioxide or carbon dioxide are present in the spray water or in the outside air, use of an all copper coil is recommended.

When face and bypass damper control is used, controls should be set to provide a minimum flow of air through the spray apparatus. A solenoid valve should be installed in the water line to shut off sprays when the fan is not running.

The atomizing spray humidifier assembly is made of a single horizontal pipe placed on the leaving side of the cooling coil and above the condensate pan. Brass, cone-shaped, 1/8" nozzles with a spray angle of 70 degrees are screwed into the pipe. Each nozzle has a fine mesh brass strainer. It is recommended that the supply pipe also have a strainer. The atomizing sprays operate on city water at 15 psi or higher.

The steam grid humidifier is constructed of an open or slotted pan which encloses an asbestos wrapped steam pipe with drilled holes in the pipe to distribute the steam. The pan is pitched to facilitate condensate drainage. A condenstate trap and liquid leg is required when operating under negative pressure to prevent "hold-up" of condensate in the pan. The steam supply to this humidifier should be odor free to prevent build-up of objectionable odors in the conditioned space.

Spray and atomizing humidifiers are not recommended for use on blow-thru type units. On these units, the humidifiers are located on the positive pressure side of the fan and spray types will cause leakage at the joints in the air handler casing. Steam pan or steam grid types are suitable with blow-thru units.

Humidifiers present no significant resistance to air flow and are ignored in resistance calculations.

HUMIDIFIERS - FOUR TYPES

- **Steam Pan:**
  - Steam coil evaporates water from a pan
  - In heating coil section
- **Spray Humidifier:**
  - Nozzles (city water => 15 psi)
  - Ahead of cooling coil for droplet elimination
- **Atomizing Spray:**
  - Horizontal pipe downstream of cooling coil
  - '1/8" Nozzles (city water => 15 psi)
- **Steam Grid:**
  - Slotted pan around a steam pipe with drilled holes

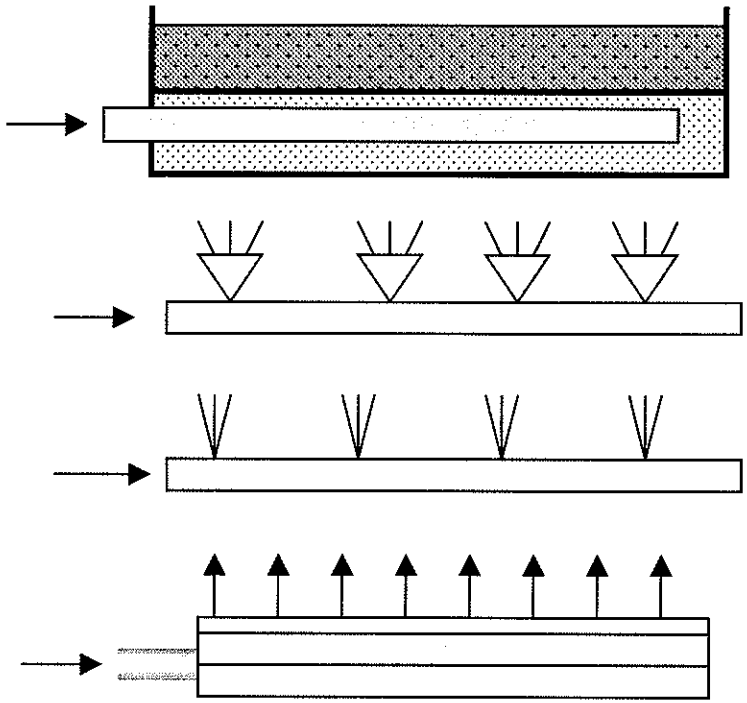

- **Draw-Thru Units:**
  - Spray & atomizing
- **Blow-Thru Units**
  - Steam pan and grid
- **No static pressure loss for all types**

MIXING BOX

The mixing box is an air plenum (a box used to gather or distribute air), with two air inlets, to each of which is attached a set of dampers. Its purpose is to mix mechanically-introduced outdoor air (ventilation) with air returned from the space. When installed in its normal position, at the entering air end of the air handling unit, this accessory will provide the proper amount of outside air for the space. The interconnecting linkage between the damper sets closes one while the other is opening. Controls often interlock and coordinate the outdoor air or return air damper position with an exhaust air damper located elsewhere. The figure below illustrates a typical mixing box.

While this example shows the dampered intakes on the bottom and back of this component, these can also be arranged for top and bottom or top and back intake.

Pneumatic, electric, or DDC operators are used to modulate the damper settings over a range which is usually scheduled to outdoor temperature via an outdoor air thermostat. The modulation range typically runs from a minimal outdoor air setting, prescribed either by design or by local code, to a 100 percent outdoor air setting.

Under the proper relative humidity and outdoor air temperature conditions, outdoor air can provide "free cooling" by absorbing the air conditioning load without the use of the refrigeration machinery. This is referred to by many manufacturers as "economizer cycle" operation.

In addition, the dampers may be controlled by an Indoor Air Quality routine which modulates the dampers to achieve a maximum carbon dioxide level in the space.

The accessories described above make draw-thru air handling units very adaptable. In addition, most manufacturers offer a number of section arrangements for even greater flexibility. Unit sections may be assembled in horizontal or vertical configurations.

They can also be floor mounted or hung from a ceiling. Increasing use is being made of units which are properly treated for outdoor applications in an effort to save valuable interior space. Some manufacturers even offer an outdoor unit modified for rooftop installation on a factory furnished roof curb. Air discharged from the units can be in almost any direction (with the exception of curb-mounted units) front, top, bottom or back.

MIXING BOX

- Plenum with two air inlets
  - Outdoor air
  - Return air
- Dampers are interconnected
- Positions controlled to provide:
  - Return air
  - Ventilation air
  - Free cooling
  - Indoor air quality
- Top, bottom and back damper locations
- Floor mounted or hung from ceiling
- Range = code minimum to 100% O.A.
- Often coordinated with remote exhaust

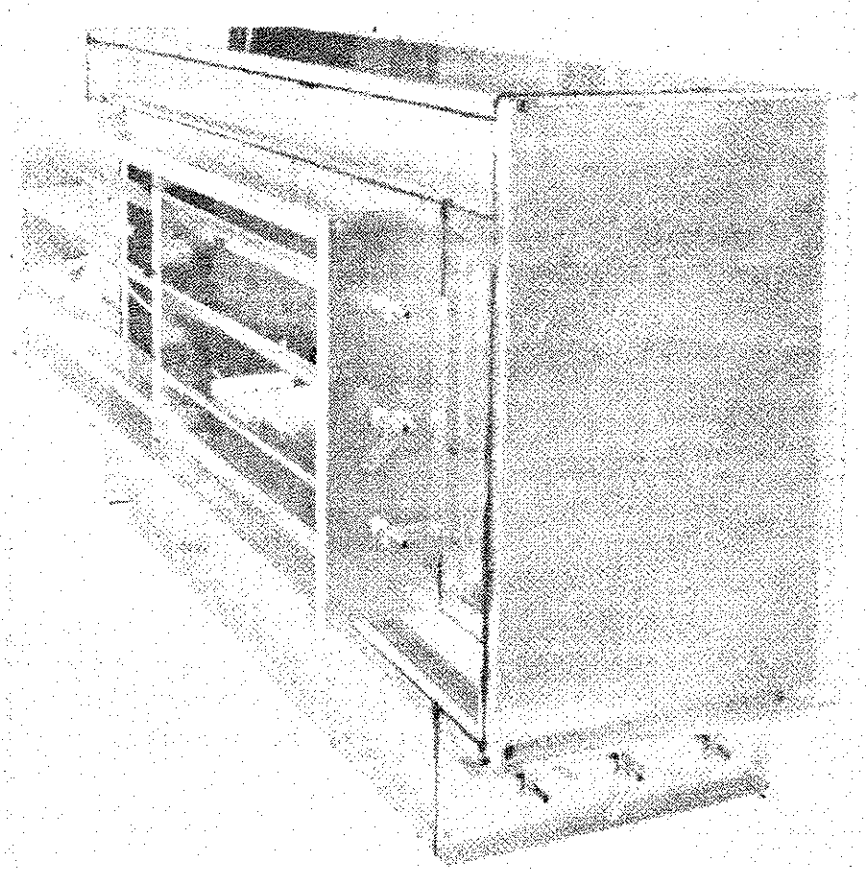

MULTIZONE UNITS

Shown below is a blow-thru air handler with blow-thru, double-duct coil section and zoning damper section attached. Altogether, these components comprise a multizone air handling unit.

Modules or sections of a blow-thru multizone unit are arranged to meet the special requirements of zoning applications.

The fan location permits the fan to push air through both coils in a parallel manner and then through multiple discharge openings from the unit. The heating coil section as well as the cooling coil section are designed with perforated distribution plates ahead of the coils to achieve uniform air distribution over the coils. The coil module is connected to a zoning damper section which contains multiple zoning dampers. This creates a blow-thru multizone unit. The heating coil supplies warm air to the upper portion called the hot deck, and the cooling coil supplies cool, dehumidified air to the lower portion called the cold deck. Zoning dampers in the heating and cooling decks are 90 degrees opposed to each other so that a nearly constant volume of air is supplied to each zone and the air flow in each zone may be modulated from 100% heating capacity to 100% cooling capacity. The number of zones available varies with unit size. As many as 28 zones have been used on a single unit. A separate supply duct feeds each zone and is connected to the appropriate portion of the zoning damper section.

Due to energy costs resulting from mixing heated with cooled air, the hot deck concept is rarely used. Instead, the heating coil is removed from the hot deck and a zone heating coil is installed in each zone supply duct. This approach is called "Texas Multizone". When done in this way, reduced load cooling cycle operation causes the multizone air handler to function as a zoning face and bypass system.

The air quantity handled by the fan, in either a blow-thru or draw-thru unit, is essentially constant at all times. In the blow-thru multizone unit, the quantity of air handled by the fan is the sum of the dehumidified air quantities required by each zone at the time of its peak load and is called the total air quantity.

On the other hand, the air passing over the cooling coil varies in quantity and the maximum is established by the instantaneous peak building load or block load of the area served by the multizone unit. This is the dehumidified air quantity and is generally less than the total air quantity handled by the fan.

Therefore, it is important in selecting the blow-thru multizone unit that the dehumidified air quantity be used in determining coil performance and the total air quantity be used in the selection of the fan.

BLOW THROUGH UNIT

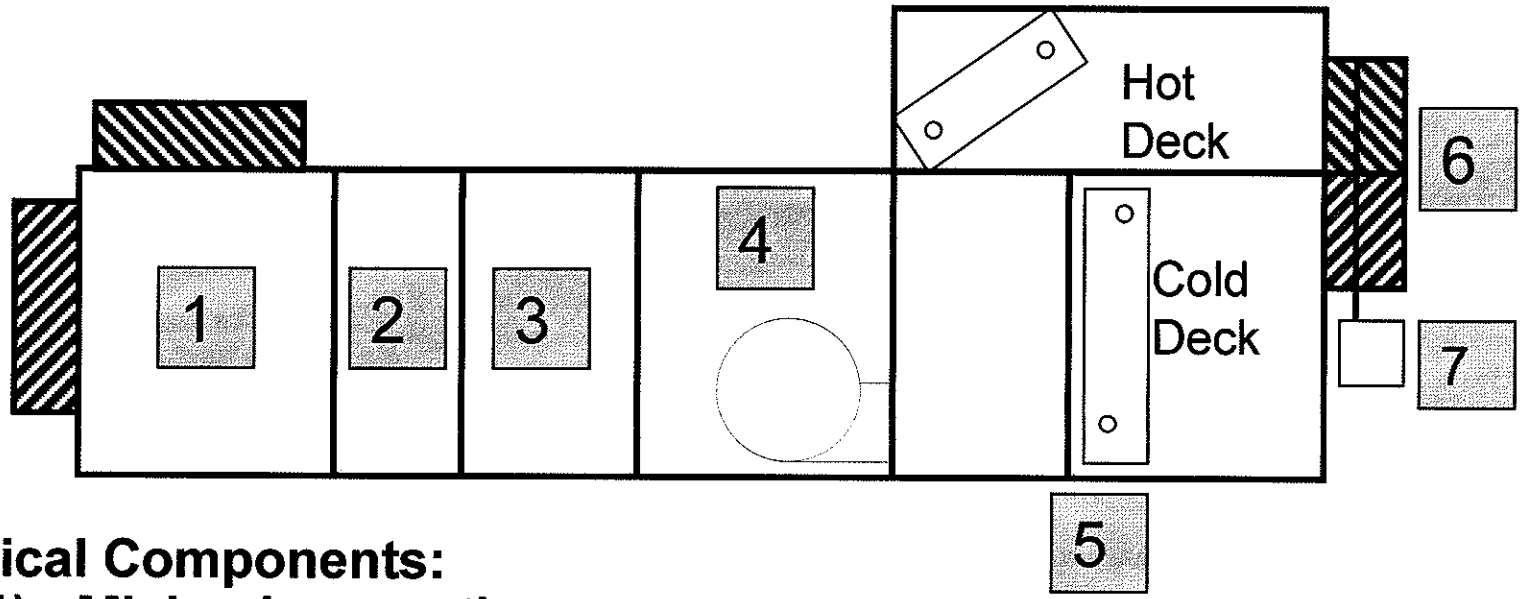

Typical Components:

- (1) - Mixing box section
- (2) - Filter section
- (3) - Access section
- (4) - Fan section
- (5) - Blow-thru coil section
- (6) - Zoning dampers
- (7) - Damper actuator

Multizone Unit:

- Up to 28 sets of dampers
- Mix hot & cold air or bypassed and cold air to meet each zones needs
- Texas Multizone = zoned heating coils

DOUBLE DUCT UNIT

The coil module can also be directly connected to ductwork without an intervening set of zoning dampers. The unit is now referred to as a double duct unit, although the only physical difference between it and the multizone blow-thru type unit is the lack of the zoning dampers. As with multizone, the heating is provided at the zone terminals to save energy that would be wasted by mixing hot and cold air streams.

In a double duct system, separate hot and cold, or bypassed and cold,supply ducts are run throughout the building with both supply ducts piped to each zone. The bypassed and cold air are then mixed at each zone by a double duct mixing type zone terminal to provide a constant volume of the proper temperature air to meet each zones' needs.

DOUBLE DUCT UNIT

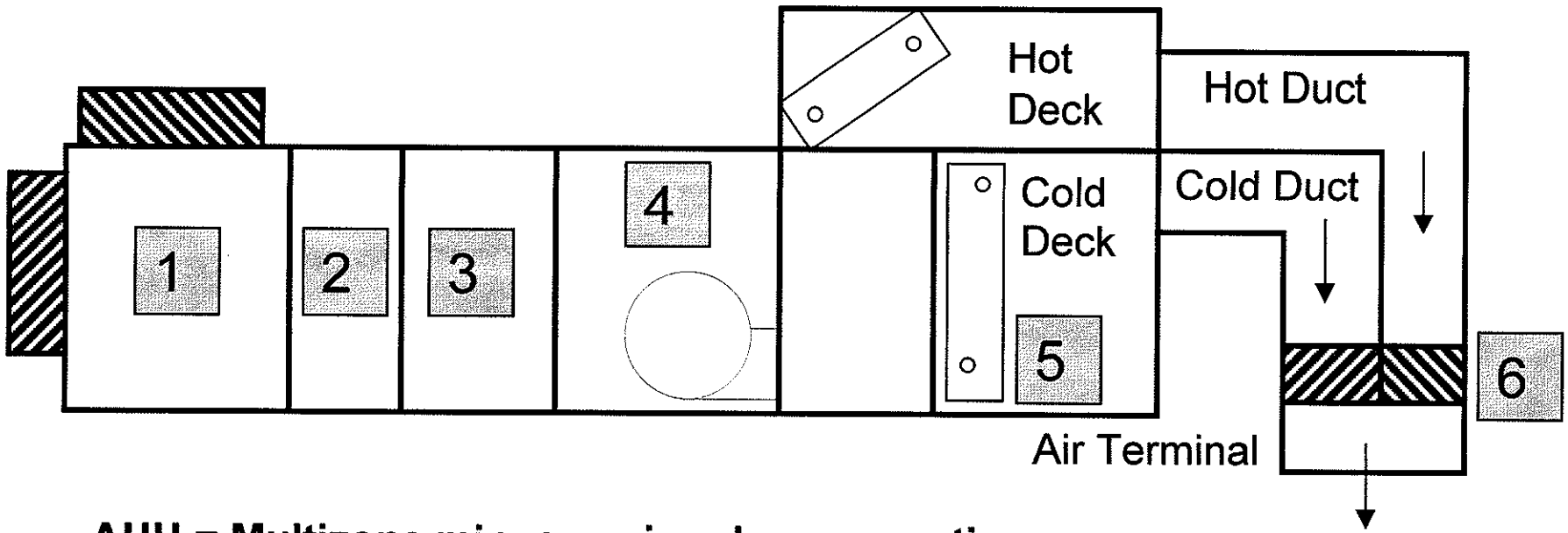

- **AHU = Multizone minus zoning damper section**
- **Dampers are moved to double duct terminal units**
  - **One terminal for each control zone.**
- **Like Texas Multizone, move heating coil to zones**
- **Bypassed and cold ducts run around the building**
- **Both ducts connected to each terminal**
- **Bypassed and cold air mixed at the terminal to provide zone control**

CONTROLS

Traditionally, air handling units have been purchased from a manufacturer and the control system has been installed in the field by a controls contractor. With the availability of Direct Digital Controls (DDC) in the marketplace today, a trend has developed to have the air handler manufacturer install the DDC controls at the factory. Such controls are often called "Product Integrated Controls" (PIC). The manufacturer installs sensors and actuators at the factory with the exception of sensors that need to be field installed (e.g. an outside air sensor for an air handler installed indoors). Installation of the DDC control panel containing the processor and input-output electronic modules can be handled in two possible ways:

1- Factory Installation of Control Panel:
In this method, the control panel is installed on the outside of the air handler and all sensor and actuator wiring is terminated by the factory.

This method reduces installation costs, but can present problems when the units are placed at the job site. Use of the control panel may be hindered by interference with other equipment and proximity to walls, other equipment, and columns.

2- Field Installation of Control panel:
In this method, the factory installs all the sensors and actuators except those, like an outside air sensor, that need field installation. The control panel is then shipped separately for field mounting on the air handler or an adjacent wall. Final sensor and actuator wiring terminations are then field installed. This method gives greater flexibility to the end user with regard to control panel placement - particularly in mechanical rooms where space is tight.

CONTROLS

- DDC controls can be provided by the air handler manufacturer.
- Sensors and actuators mounted at the factory
- Two possible control panel installation methods
  - Factory installation
  - Field placement & installation

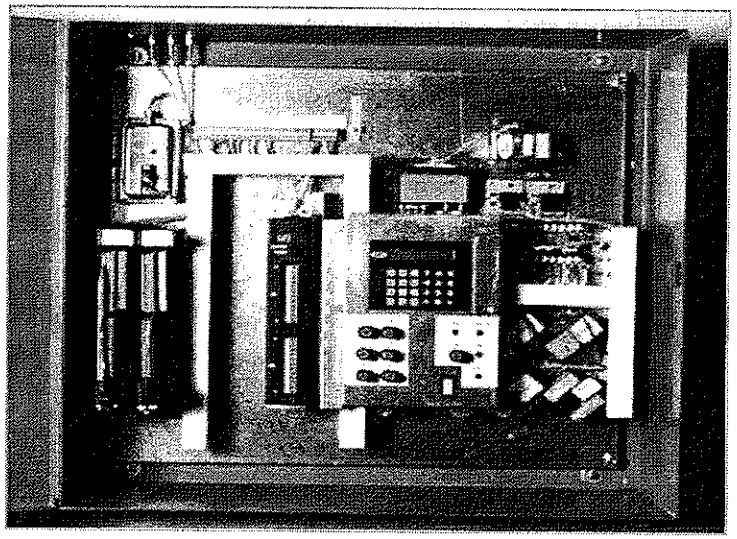

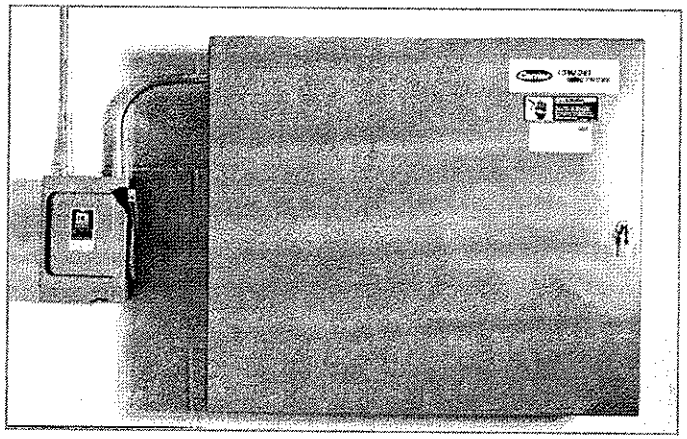

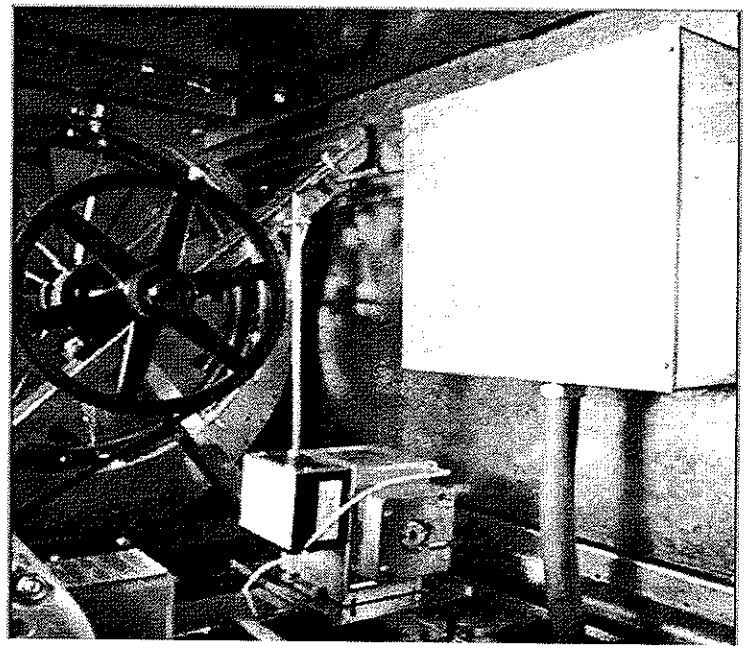

AHU SELECTION GUIDELINES

The first step in selecting an air handling unit is to determine the basic unit size. The required air quantity is determined from the load estimate. The smallest and least expensive unit selection is made when the average air velocity across the face of the coil is at the maximum limit established by the manufacturer or the designer.

The issue at stake here is that at high velocities, the moisture condensed from the air passing through the coil has a tendency to be blown from the coil into the discharge ductwork. There is a disparity between manufacturers and designers as to what that maximum velocity should be.

Most manufacturers design and test the air handling units at a maximum face velocity of 700 feet per minute (FPM). Design engineers frequently specify face velocities in the 450 to 550 FPM range.

Thus the unit size is determined by dividing the required CFM from the load estimate by the maximum face velocity. This yields a minimum coil face area. Simply use the unit size whose face area equals or exceeds the target face area.

Next, a cooling coil should be selected. The load estimate provides the required entering and leaving conditions for a "perfect coil". This coil would remove the correct ratio of sensible and latent heat in such a way that when the air left the coil, it would absorb the design sensible and latent loads and maintain the design room dry bulb and room relative humidity levels specified.

Thus, a coil is selected to satisfy the total coil sensible load at the entering and leaving conditions (drybulb/wet bulb) determined from the load estimate. After coil performance has been calculated, a check is made to confirm that the coil meets or exceeds the total coil load. This assures that the coil can meet or exceed the room latent loads.

Other conditional factors may be imposed on the coil selection. For a chilled water coil they include an entering chilled water temperature (usually 45F), a chilled water temperature rise, and a maximum chilled water flow rate or pressure drop.

Usually, several combinations of coil rows, fins per inch, and circuiting satisfy all the requirements. The lowest cost coil is then chosen from the possible combinations.

The process can be summarized as follows:
1- Size unit based on face velocity
2- Impose limits on performance
3- Select coil entering chilled water temperature
4- Select to match total coil sensible load
5- Meet or exceed coil total load
6- Select lowest cost of available solutions

AHU SELECTION GUIDELINES

1- Establish maximum face velocity
   - Manufacturers: 700 feet per minute
   - Designers: 450 to 550 feet per minute
   - Limit to prevent carryover of condensed moisture into ducts
2- Determine required CFM from load estimate
3- Calculate required face area (CFM / max velocity)
4- Select unit with ≥ required face area
5- Establish entering chilled water temperature
6- Establish coil entering and leaving conditions (db/wb) from the load estimate (perfect coil)
7- Establish limits for waterside pressure drop, etc.
8- Select coil for total coil sensible load
9- Check that coil capacity ≥ total coil load
10- Select lowest cost from acceptable choices

SELECTION COST AND CIRCUITING

When reviewing the variety of coil combinations that satisfy the selection parameters, a lowest cost combination is to be chosen. What are the cost trends in circuiting, fins per inch, and rows?

Circuiting:
With the exception of double circuiting, circuit offerings are usually the same price or closely priced. Thus, they are not significant when selecting a final coil. Circuiting should be selected to keep waterside pressure drop within reasonable limits, but not so low that the tube velocity drops into the laminar flow range ($\leq$ 1 fps), where heat transfer becomes erratic and unpredictable. When a modulating value is used to control coil capacity, design circuit velocity should be as near 12 fps, the upper limit, as possible, but in the range of 10 - 15 foot w.g. Δ Pw. This technique will maximize the controllable capacity range.

Fins Per Inch and rows:
Next on the list of least costly changes is fin spacing. An increase in fins per inch is less expensive than an increase in rows. For example, if you had to choose between a 4-row 14 fins per inch coil and a 6-row 8 fins per inch, the least costly choice would be the 4-row 14 fins per inch.

The previous comments are based on both coils meeting all the selection limits imposed - maximum water side pressure drop, GPM range, air side pressure loss, etc. These limits will usually reduce the number of acceptable coils significantly.

SELECTION COST AND CIRCUITING

- **CIRCUITING:**
  - Not a cost factor - except for double circuiting
  - Disregard it financially
  - Pay careful attention to it for stable capacity control with modulated valves
  - Target tube velocity 1 - 12 FPS
  - If modulated valves choose closer to 12 FPS but with 10 - 15 ft. w.g. Δ Pw
- **FINS PER INCH (FPI) AND ROWS:**
  - Given two coils that meet performance needs
  - 4-row 14 FPI, and 6-row 8 FPI
  - An increase in FPI < increase in rows
  - 4-row 14 FPI < 6-row 8 FPI
  - Choose low cost 4-row 14 FPI

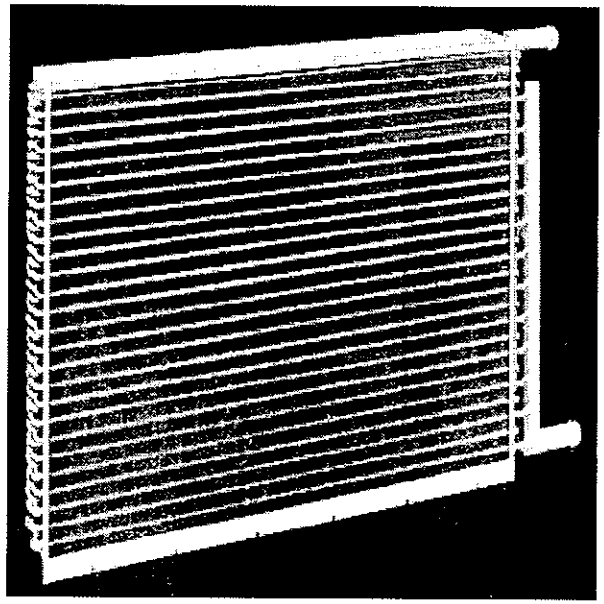

SAMPLE SELECTION

Your instructor will now demonstrate the use of Carrier's computerized AHU Builder Selection program. The requirements for the sample selection are provided on the next page.

Follow along with your instructor as you are taken through the computer screens.

SAMPLE SELECTION

- **Use the following parameters to do a sample AHU selection:**

- **Cooling Spec:**
  - Standard CFM 29,090
  - Ent. DB/WB (F) 80/67
  - Lvg. DB/WB (F) 54.9/54.6
  - Total Cap. (Btuh) 1,000,000
  - Sensible Capacity 800,000
  - Altitude 0 feet
  - Ent. Water Temp. 45 F
  - Max face Vel. 550 FPM
  - Max Water Drop 20 ft wg

- **Heating Spec:**
  - Standard CFM 29,090
  - Ent. DB (F) 60
  - Capacity (Btuh) 600,000
  - Ent. Water Temp 120 F
  - Max Water Drop 20 ft wg
  - Max Face Vel. 600 FPM

- **Fan Spec:**
  - Forward Curved Fan
  - Standard CFM 29,090
  - External Static 2.0 in wg
  - Max Cool Static 1.0 in wg
  - Max Heat Static 0.5 in wg
  - Standard Mixing Box
  - (1) Flat 4" Throw Away Filter
  - (1) Bag Filter 60-65% Eff.

DEMONSTRATE AHU BUILDER PROGRAM

- Follow your instructor
- Activate your computer
- Activate the AHU Builder selection program in the Carrier Electronic Catalog
- Your instructor will guide you through the steps

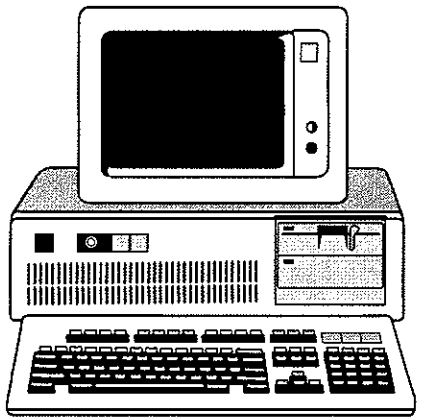



VENTILATION UNIT SELECTION

The Hotel rooms require ventilation air. A separate ventilation air handling unit will provide this air. Any central station air handler can be used as a ventilation unit if it offers adequate components, coils and filtration, as Carrier's does. The unit is located in the penthouse mechanical room and a sample computer output for this unit has been provided for your use in designing the water piping system for the building.

Before attempting to simply select an air handling unit with coil(s) to handle the ventilation load, a psychrometric analysis must be done. This is necessary to see if it is feasible to cool and dehumidify the outdoor air sufficiently in a single process (with one cooling coil) or if multiple processes are necessary.

The psychometric analysis may be done manually or electroncially. Your instructor will show you how to do it using Carrier's electronic psychrometric program., Psych+.

In order to select this air handler with its coils, you must calculate the total, sensible and latent cooling loads using the three basic air system heat transfer formulas. You must also calculate the heating load, then select the appropriate air handler with coils and accessories using the Carrier AHU Builder software. Your instructor will demonstrate the use of this program.

CASINO LOAD ESTIMATE & LIMITS

Having used the computer program to select the sample air handling unit, it is now up to you to repeat the process in order to select the two air handlers for the first floor (one for the casino with public bathrooms, and one for the restaurant.), and the ventilation air handling unit for the 18 hotel floors. The kitchen is served by a separate air handler which you will not select.

The required load data, entering coil conditions, leaving conditions, and limiting parameters are provided on the pages that follow.

Assemble into your design teams and select the three air handling units.

CASINO LOAD ESTIMATE & LIMITS

- **The following load data has been provided in the Design Project section at the end of this book:**
- **Ignore kitchen AHU and adhere to the following limits in selecting the air handlers for the casino with public bathrooms, restaurant, and ventilation unit for 18 hotel floors:**
  - **Maximum face velocity for cooling 550 FPM**
  - **Maximum water pressure drop (cooling) 15 ft wg**
  - **Maximum water pressure drop (heating) 15 ft wg**
  - **Coil entering chilled water = 45F**
  - **Coil entering hot water = 160F**
  - **AHU accessories:**
  - **Require a forward curved fan - horizontal**
  - **Standard mixing box**
  - **(1) flat filter 2 inch throwaway**
  - **(1) bag filter 90-95% efficient**

Ventilation AHU:
CFM = 45,180
Supply 75F/55% to hotel rooms
Use psychrometric formula to calculate loads
Same outdoor design temps as casino

AHU Selection Info

Casino Coil Selection Parameters:		Heating
1. Standard CFM =	40,032	
2. Actual CFM =	40,815	
3. Entering DB / WB (F)	84.8/68.6	60 DB
4. Leaving DB / WB (F)	55.0/54.3	
5. Total Coil Load (Btuh)	1,778,332	
6. Sensible Coil Load (Btuh)	1,290,348	1,539,479
7. Apparatus Dewpoint (F)	53.4	
8. Bypass Factor	0.05	

St. Louis Design Conditions:	
Latitude =	38 deg
Elevation =	535 ft
Summer DB (F)	97.0
Coincident WB (F)	75.0
Grains/Lb	95.0
Daily Range (F)	21.0
Winter DB (F)	2.0
Atmospheric Clear. NO.	0.95

Thermostat Setpoints		Room Occ
Cool (occ)	75.0	71GR
Cool WB	63.8	53.8%RH
Cool (Unoc	85.0	57.6DP
Heat	72.0	

Ent Chilled Water	45 F
Ent Hot water	120 F

19-Floor High Rise Hotel --Casino / Public Restrooms

Selection Parameters	Cooling	Heating	Design Conditions	Value
Standard air supply CFM	34,688 CFM	34,688 CFM	Location: St. Louis, Missouri	U.S.A..
Actual air supply CFM	35,367 CFM	35,367 CFM	Latitude	38.8° N
Ventilation CFM	14,150 CFM	14,150 CFM	Elevation	535 ft.
Direct exhaust CFM	1,400 CFM	1,400 CFM	Summer Outdoor db/wb	97/75F
Total coil load	1,584,501 Btuh	1,406,259 Btuh	Summer Outdoor Daily Range	21F
Sensible coil load	1,144,561 Btuh	1,406,259 Btuh	Winter Outdoor db	2 F
Zone sensible load	749,269 Btuh	357,046 Btuh	Atmospheric Clearness #	0.95
Coil entering air conditions (db/wb)	85.6 / 69.0 F	43.4 / 37.1F	Indoor Summer Design db/ rh	75F/55%
Coil leaving air conditions (db/wb)	55.0 / 54.3 F	82.3 / 58.6F	Unoccupied Cooling db	85F
Coil apparatus dewpoint	53.4 F	N.A.	Indoor Winter Design db	72F
Coil bypass factor	0.050	N.A.	Unoccupied Heating db	62F

19-Floor High Rise Hotel --Restaurant

Selection Parameters	Cooling	Heating	Design Conditions	Value
Standard air supply CFM	2,078 CFM	2,078 CFM	Location: St. Louis, Missouri	U.S.A..
Actual air supply CFM	2,118 CFM	2,118 CFM	Latitude	38.8° N
Ventilation CFM	1,400 CFM	1,400 CFM	Elevation	535 ft.
Direct exhaust CFM	880 CFM	880 CFM	Summer Outdoor db/wb	97/75F
Total coil load	120,157 Btuh	117,382 Btuh	Summer Outdoor Daily Range	21F
Sensible coil load	79,072 Btuh	117,382 Btuh	Winter Outdoor db	2 F
Zone sensible load	44,876 Btuh	13,573 Btuh	Atmospheric Clearness #	0.95
Coil entering air conditions (db/wb)	89.5 / 71.7 F	24.8 / 22.8F	Indoor Summer Design db/ rh	75F/55%
Coil leaving air conditions (db/wb)	54.3 / 53.6 F	78.9 / 57.2F	Unoccupied Cooling db	85F
Coil apparatus dewpoint	52.4 F	N.A.	Indoor Winter Design db	72F
Coil bypass factor	0.050	N.A.	Unoccupied Heating db	62F

PROJECT: CASINO AHU SELECTION

- Locate your Design Project Material in the back of this book
- Gather into your design teams
- Select two AHU's for the public floor; one for casino; one for restaurant
- Select the ventilation AHU for the 18 hotel floors
- Provide input and output printouts for your project as directed by your instructor

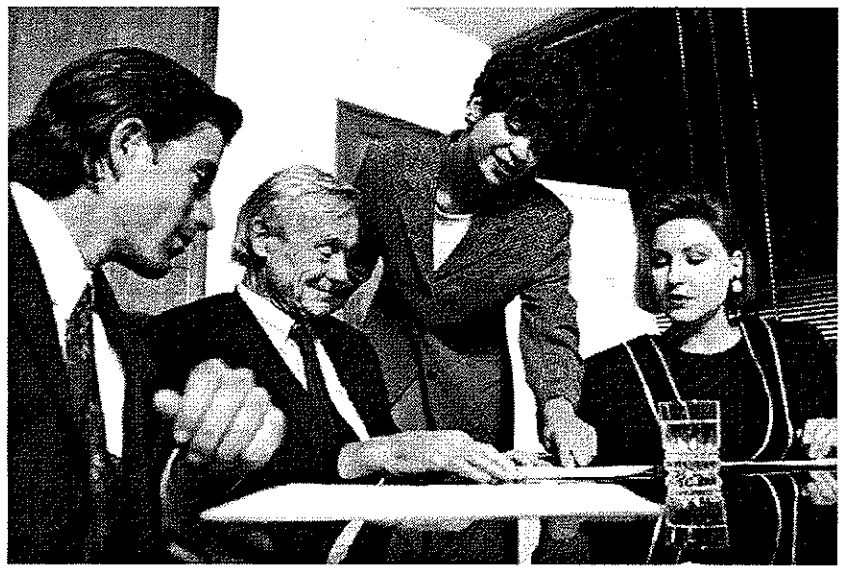

END

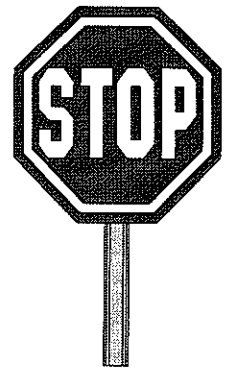

CONTROL VALVES

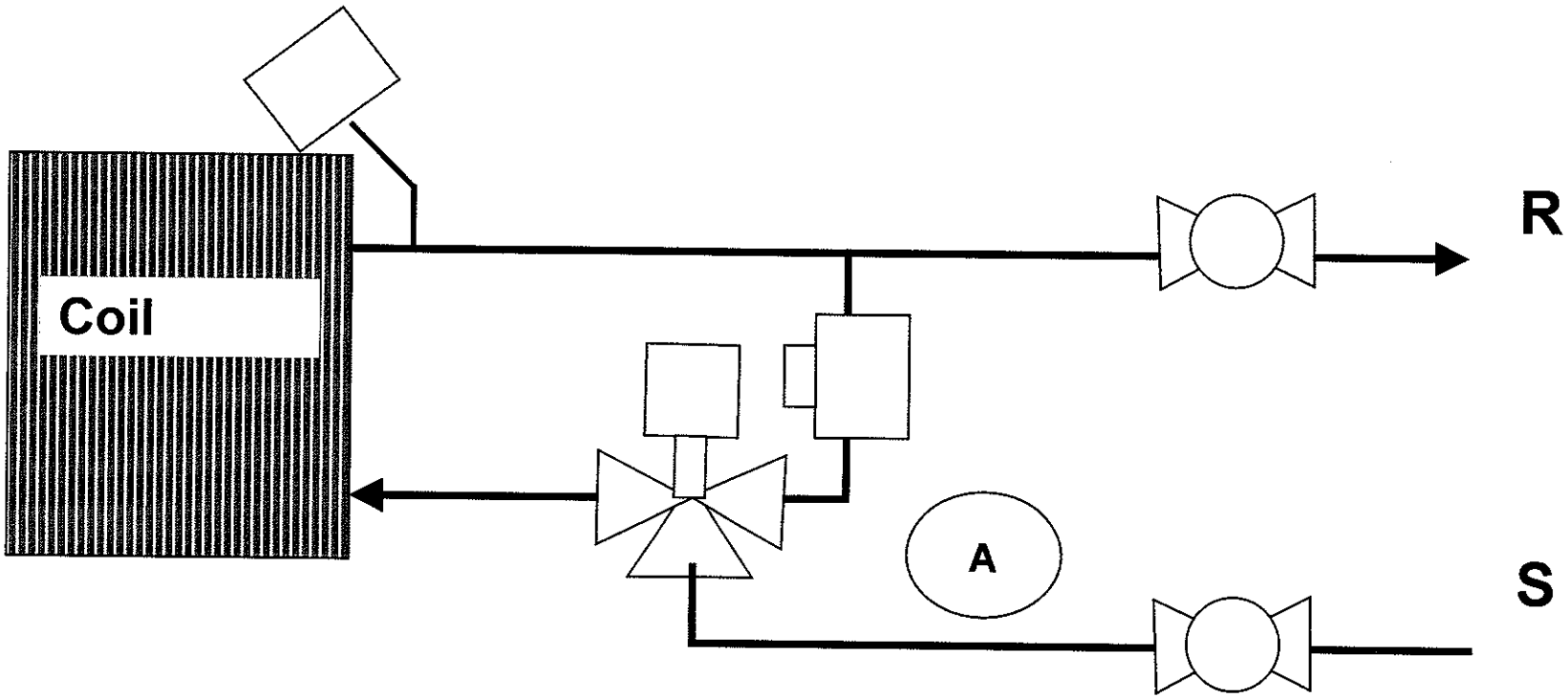

DES700

APPLIED WATER SYSTEM DESIGN

OBJECTIVES

The coils in room fan coil units are controlled to maintain room conditions. The coils in central station air handling units are controlled to maintain conditions consistent with the air system they supply. Control valves are used in both instances. In addition, piping systems are required to deliver water to these coils.

This section addresses the typical piping layouts for both fan coils and central station air handling units and the controls that are usually provided. At the end of this session you should be able to:

1- Understand room fan coil control options and their impact on room comfort
2- Be Familiar With:
   - Fan coil standard thermostat control packages
   - Typical fan coil piping layouts
   - Standard factory valve packages
   - Typical air handler coil piping layouts
3- Understand coil capacity versus water flow
4- Select the type of modulating control valve which makes the valve-coil capacity characteristic linear
5- Select control valves for fan coil units and air handling units

OBJECTIVES

- Understand room fan coil control options and their impact on room comfort
- Be able to select:
  - Fan coil standard thermostat control packages
  - Typical fan coil piping layouts
  - Standard factory valve packages
  - Typical air handler coil piping layouts
- Understand coil capacity versus water flow
- Be able to select the type of modulating control valve which makes the valve-coil capacity characteristic linear
- Select control valves for fan coil units and air handling units

SYSTEM & TERMINAL CONTROL SPREADSHEETS

The spreadsheets which follow show system and terminal control strategy for 6 zoned systems which use chilled water coils, water control valves, water piping and pumps. Each spreadsheet is followed by an enlargement of the system or terminal control schematic included in the spreadsheet.

Use these spreadsheets to understand the typical control strategy for a particular system, both at the central machinery and the terminals which condition the temperature control zones. Use the enlarged schematic as you review the matching spreadsheet.

Two of the systems are all-water systems, unit ventilator and room fan coil. Conduit induction is an air-water system. The remainder are all-air systems. All use chilled water coils with control valves, which are fed by a water piping system connected to a chiller and, perhaps, a boiler.

UNIT VENTILATOR
SYSTEM CONTROL

There are several system control options with a central chilled water system, such as that which usually feeds unit ventilators. D-X style unit ventilators eliminate the central chiller and water piping but require a condensing unit with refrigerant piping for each fan coil, instead.

System Schematic

SYSTEM CONTROL SCHEMATIC
UNIT VENTILATOR

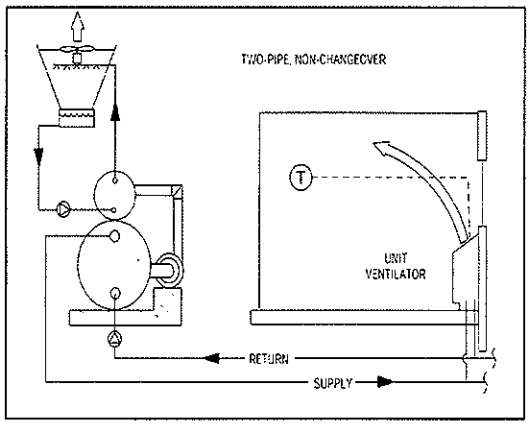

Occupied Cooling

- At time clock setting for occupied cycle, unit ventilator fans cycle on; also chilled water pump(s), chiller and central exhaust and ventilation systems.
- Chiller adjusts capacity in response to chilled water temperature control loop. Chilled water temperature may be reset by return water temperature, outdoor air temperature, etc.

Occupied Heating

- At time clock setting for occupied cycle, unit ventilator fans cycle on as well as central exhaust and ventilation systems.
- **2-Pipe Non-changeover**: No central heat. Electric resistance zone heater in unit ventilators satisfies zone heating needs.
- **2-Pipe Changeover:** Central hot water boiler supplies water system below selected outdoor air temperature or load status feedback loop (DDC). Chiller off. Hot water temperature may be scheduled to outdoor air temperature, return water temperature, etc. Above changeover temperature, resistance zone heaters provide capacity. Best used in moderate climates where heating loads occur in unoccupied cycle.
- **4-Pipe:** Chiller and/or boiler on the line on demand. Hot and cold water supply available individually or simultaneously, when needed. Best benefit in occupied cycle for finger plan schools in cold climates, where fossil fuel-fired boiler saves energy.

Unoccupied Cooling

- Central exhaust and ventilation systems off.
- Chiller capacity modulated (for centrifugal or screw compressor models) and/or stepped (reciprocating or scroll compressor models) to meet cooling load at unoccupied setpoint.
- Unit ventilator fans may run constant or cycle with cooling load.

Unoccupied Heating

- Central exhaust and ventilation systems off.
- **2-Pipe Non-changeover:** Electric resistance zone heater in unit ventilators maintains zones at unoccupied setpoint.
- **2-Pipe Changeover:** Below changeover outdoor temperature, the central boiler maintains zones at setback temperature. Above changeover temperature, zone electric resistance heater in unit ventilators maintains zones at unoccupied setpoint.
- **4-Pipe:** Central boiler supplies hot water to unit ventilators to maintain zones at unoccupied setpoint.
- Unit ventilator fans may be on or cycle with heating load.

System Changeover

- **2-Pipe Non-changeover:** There is no system changeover. The chiller is shut down below its minimum capacity point.
- **2-Pipe Changeover:** Outdoor air temperature (or some other indicator of block load) changes the active central machine from chiller to boiler or vice-versa. Pipe design and valve control must prevent thermal shock to machine from residual water in the return lines at the time of changeover.
- **4-Pipe:** No system changeover, per se. Chiller cycles off below its minimum capacity step. Boiler cycles on with call for heating, outdoor air setpoint, or some other block heating load indicator.

SYSTEM CONTROL SCHEMATIC
UNIT VENTILATOR

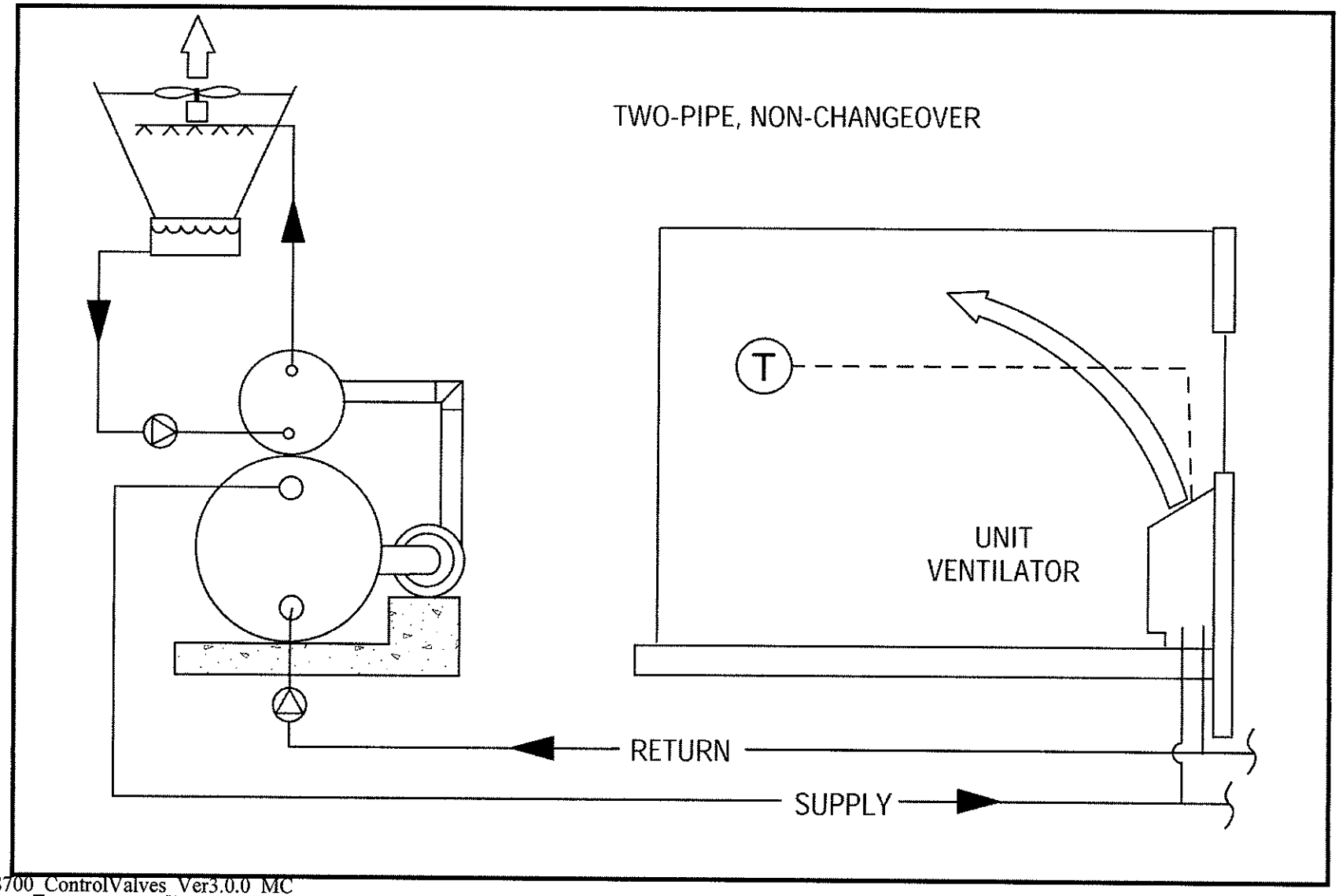

UNIT VENTILATOR
TERMINAL CONTROL

Each unit ventilator is a terminal which controls a zone. These chilled water or D-X fan coils have the ventilation capability necessary to satisfy most code requirements. They have been used to heat classrooms for decades.

TERMINAL CONTROL SCHEMATIC
UNIT VENTILATOR (TWO-PIPE, NON-CHANGEOVER)

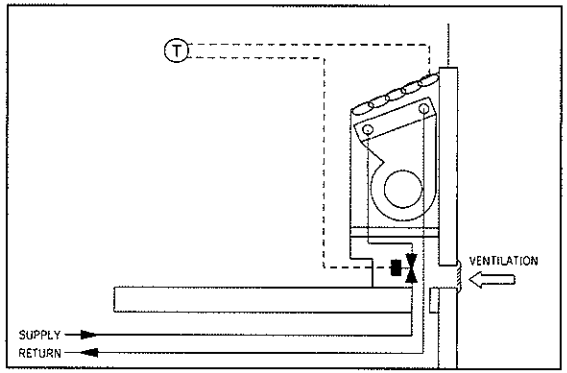

Cooling Capacity

- Capacity is controlled by valve modulation, fan speed, or a combination of the two.
- 2-way valve control yields the energy savings and diversified pipe sizing benefits of variable-volume water pumping.
- 3-way valve control produces a constant-volume water pumping situation, with quiet operation and easy balancing.
- Chilled water temperature often is scheduled to return water temperature at the chiller.

Humidity Mitigation

- Valved control contributes to elevated cooling coil ADP and humidity buildup.
- Chilled water reset (upward) at partial cooling loads contributes to zone humidity buildup.
- Constant ventilation damper opening contributes to zone humidity buildup.
- Humidity buildup may be mitigated somewhat by reducing fan speed at partial cooling load and avoiding chilled water reset.
- Where necessary and legal, unit ventilator heating coil can operate as reheat coil.

Heating Capacity

- **2-Pipe Changeover & 4-Pipe Systems:** Capacity controlled by valve modulation (occupied); by fan cycling (unoccupied).
- 2-way valve control yields energy savings of variable-volume pumping.
- 3-way valve control produces a constant-volume water pumping situation, with quiet operation and easy system balancing.
- Hot water temperature often is reset according to outdoor temperature or return water temperature at the boiler.
- **2-Pipe Non-changeover:** Electric resistance zone heater in unit ventilator is cycled by thermostat.

Ventilation

- Outdoor air wall sleeve provides 0 - 100% outdoor air.
- Fixed setting; stays open 24 hours per day. Does not modulate closed during unoccupied cycle or, during occupied cycle, when a zone is not in use.
- Zone space pressurization determines, to a great degree, the extent of ventilation or exfiltration through the wall sleeve.
- Proper central exhaust system enhances predictable ventilation rates through the wall sleeve.

Airflow

- Constant air flow during occupied cycle when valved control is used. Fan speed control, for the sake of humidity mitigation, compromises room air motion and mixing.
- Usually free discharge. Good room air mixing and air motion penetrates back about 15 - 20 feet from the perimeter of the building.

TERMINAL CONTROL SCHEMATIC
UNIT VENTILATOR (TWO-PIPE, NON-CHANGEOVER)

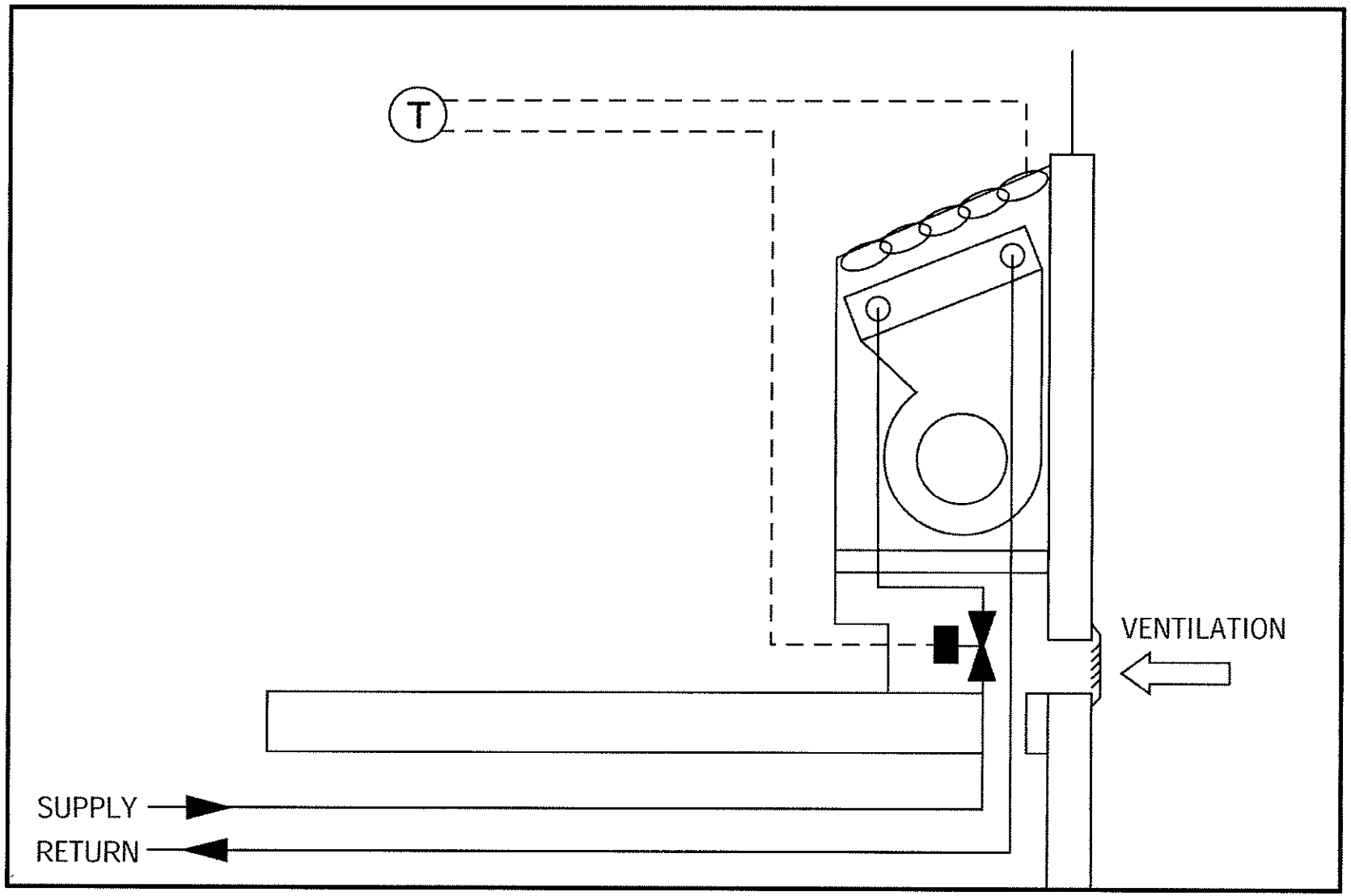

ROOM FAN COIL
SYSTEM CONTROL

As with unit ventilators, there are several system control options with a central chilled water system, such as that which feeds room fan coils. The similarities between fan coils and unit ventilators are striking, especially for floor-mount units. Generally speaking, free-discharge room fan coils tend to be smaller in capacity, more versatile in location and more limited in ventilation % than unit ventilators. Ducted versions easily handle large zones.

SYSTEM CONTROL SCHEMATIC
FOUR-PIPE ROOM FAN COIL

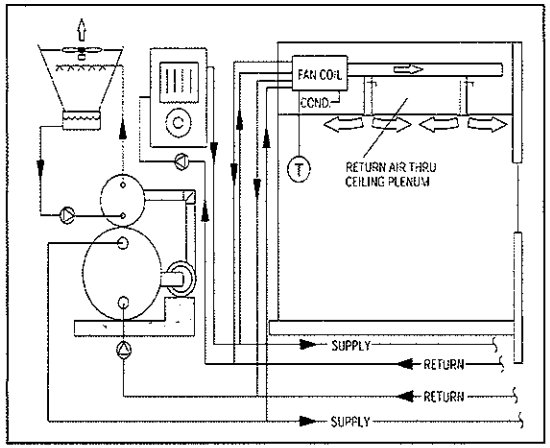

Occupied Cooling
- At time clock setting for occupied cycle, fan coil fans cycle on; also chilled water pump(s), chiller and central exhaust and ventilation systems.
- Chiller adjusts capacity in response to chilled water temperature control loop. Chilled water temperature may be reset by return water temperature, outdoor air temperature, etc.
- Where used, separate ventilation air handler may provide no cooling capacity (neutral air at room conditions), latent capacity, sensible capacity or a combination.

Occupied Heating
- At time clock setting for occupied cycle, fan coil fans cycle on as well as central exhaust and ventilation systems.
- **2-Pipe Non-changeover**: No central heat. Electric resistance zone heater in fan coils satisfies zone heating needs.
- **2-Pipe Changeover:** Central hot water boiler supplies water system below selected outdoor air temperature or load status feedback loop (DDC). Chiller off. Hot water temperature may be scheduled to outdoor air temperature, return water temperature, etc. Above changeover temperature, resistance zone heaters provide capacity. Best used in moderate climates where heating loads occur in unoccupied cycle.
- **4-Pipe:** Chiller and/or boiler on the line on demand. Hot and cold water supply available individually or simultaneously, when needed. Best benefit in occupied cycle for finger plan schools in cold climates, where fossil fuel-fired boiler saves energy.

Unoccupied Cooling
- Central exhaust and ventilation systems off.
- Chiller capacity modulated (for centrifugal or screw compressor models) or stepped (reciprocating or scroll compressor models) to meet cooling load at unoccupied setpoint.
- Fan coil fans may run constant or cycle with cooling load.

Unoccupied Heating
- Central exhaust and ventilation systems off.
- Fan coil fans on or cycled with heating load.
- **2-Pipe Non-changeover:** Electric resistance zone heater in fan coils maintains zones at unoccupied setpoint.
- **2-Pipe Changeover:** Below changeover outdoor temperature, the central boiler maintains zones at setback temperature. Above changeover temperature, zone electric resistance heater in fan coils maintains zones at unoccupied setpoint.
- **4-Pipe:** Central boiler supplies hot water to fan coils to maintain zones at unoccupied setpoint.

System Changeover
- **2-Pipe Non-changeover:** There is no system changeover. The chiller is shut down below its minimum capacity point.
- **2-Pipe Changeover:** Outdoor air temperature (or some other indicator of block load) changes the active central machine from chiller to boiler or vice-versa. Pipe design and valve control must prevent thermal shock to machine from residual water in the return lines at the time of changeover.
- **4-Pipe:** No system changeover, per se. Chiller cycles off below its minimum capacity step. Boiler cycles on or off based on heating load, outdoor air setpoint, or some other block heating load indicator.

SYSTEM CONTROL SCHEMATIC
FOUR-PIPE ROOM FAN COIL

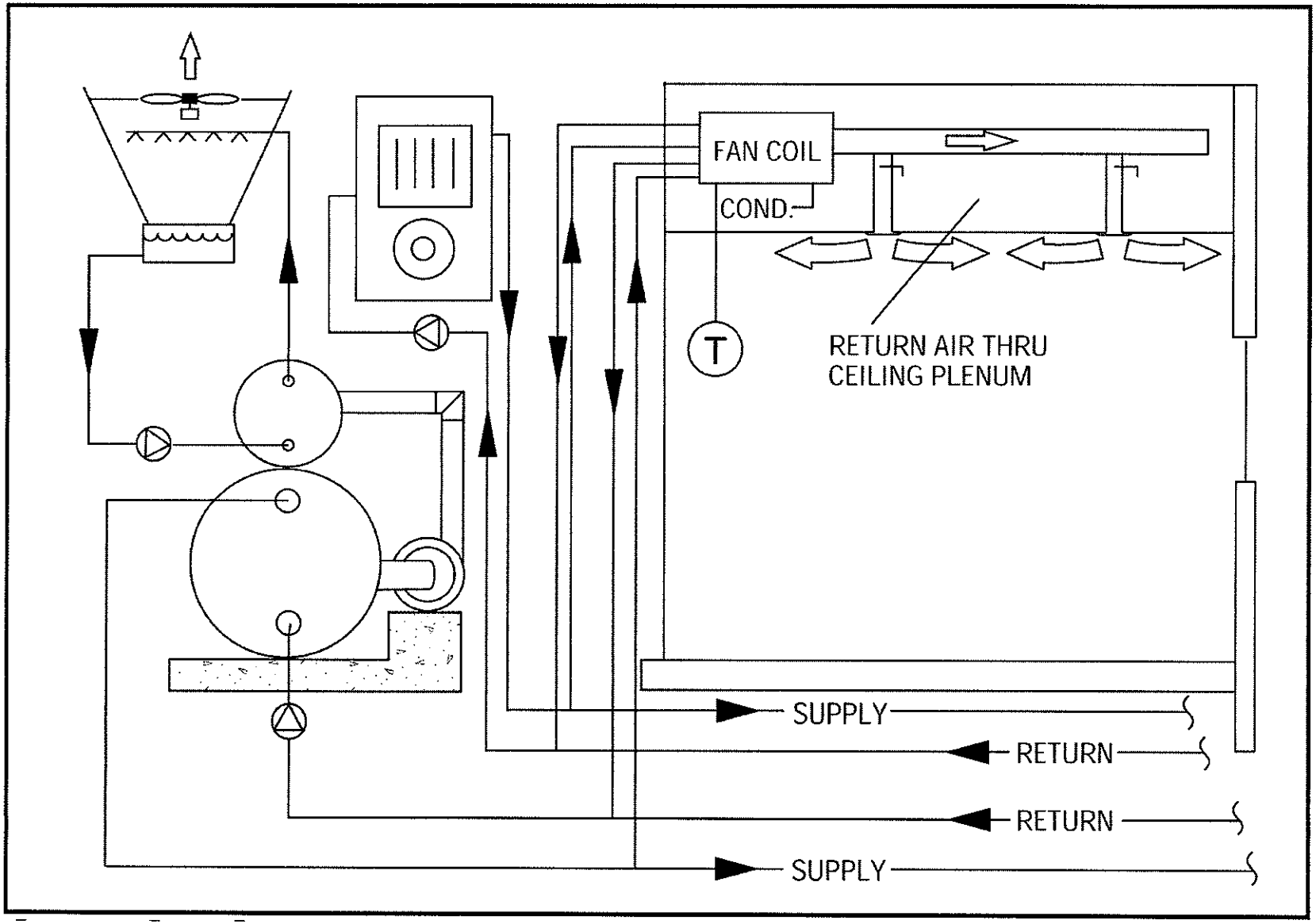

ROOM FAN COIL
TERMINAL CONTROL

Each room fan coil is a terminal that controls a zone. Ventilation air must be run to ducted units. Perimeter, floor-mount units provide ventilation via wall sleeve. Supplementary ventilation system is usual.

TERMINAL CONTROL SCHEMATIC
FOUR-PIPE ROOM FAN COIL

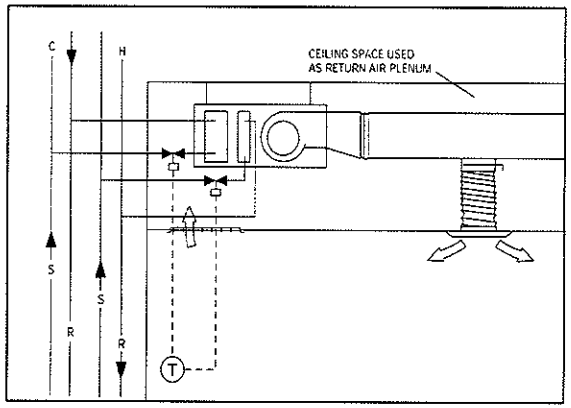

Cooling Capacity

- Capacity is controlled by valve modulation, fan speed, or a combination of the two.
- 2-way valve control yields the energy savings and diversified pipe sizing benefits of variable-volume water pumping.
- 3-way valve control produces a constant-volume water pumping situation, with quiet operation and easy balancing.
- Chilled water temperature often is scheduled to return water temperature at the chiller.

Humidity Mitigation

- Where used, central ventilation AHU can provide latent cooling capacity.
- Valved control contributes to elevated cooling coil ADP and humidity buildup.
- Chilled water reset (upward) at partial cooling loads contributes to zone humidity buildup.
- Constant ventilation damper opening contributes to zone humidity buildup.
- Humidity buildup may be mitigated somewhat by reducing fan speed at partial cooling load and avoiding chilled water reset.
- Where necessary and legal, fan coil heating coil can operate as reheat coil.

Heating Capacity

- **2-Pipe Changeover & 4-Pipe Systems:** Capacity controlled by valve modulation (occupied); by fan cycling (unoccupied).
- 2-way valve control yields energy savings of variable-volume pumping.
- 3-way valve control produces a constant-volume water pumping situation, with quiet operation and easy system balancing.
- Hot water temperature often is reset according to outdoor temperature or return water temperature at the boiler.
- **2-Pipe Non-changeover:** Electric resistance zone heater in fan coil is cycled by thermostat.

Ventilation

- Outdoor air wall sleeve on perimeter, floor-mount units provides 0 - 25% outdoor air.
- Fixed setting; stays open 24 hours per day. Does not modulate closed during unoccupied cycle or, during occupied cycle, when a zone is not in use.
- Zone space pressurization determines, to a great degree, the extent of ventilation or exfiltration through the wall sleeve.
- Separate, central exhaust system usually required to handle classroom ventilation.
- Separate ventilation system may provide necessary latent cooling capacity and, in the winter, humidification.

Airflow

- Constant air flow during occupied cycle when valved control is used. Fan speed control, for the sake of humidity mitigation, compromises room air motion and mixing.
- Generally speaking, ducted units are much better for mixing and room air motion in large zones than free discharge units, which cover about 15 - 20 ft. from the unit.

TERMINAL CONTROL SCHEMATIC

FOUR-PIPE ROOM FAN COIL

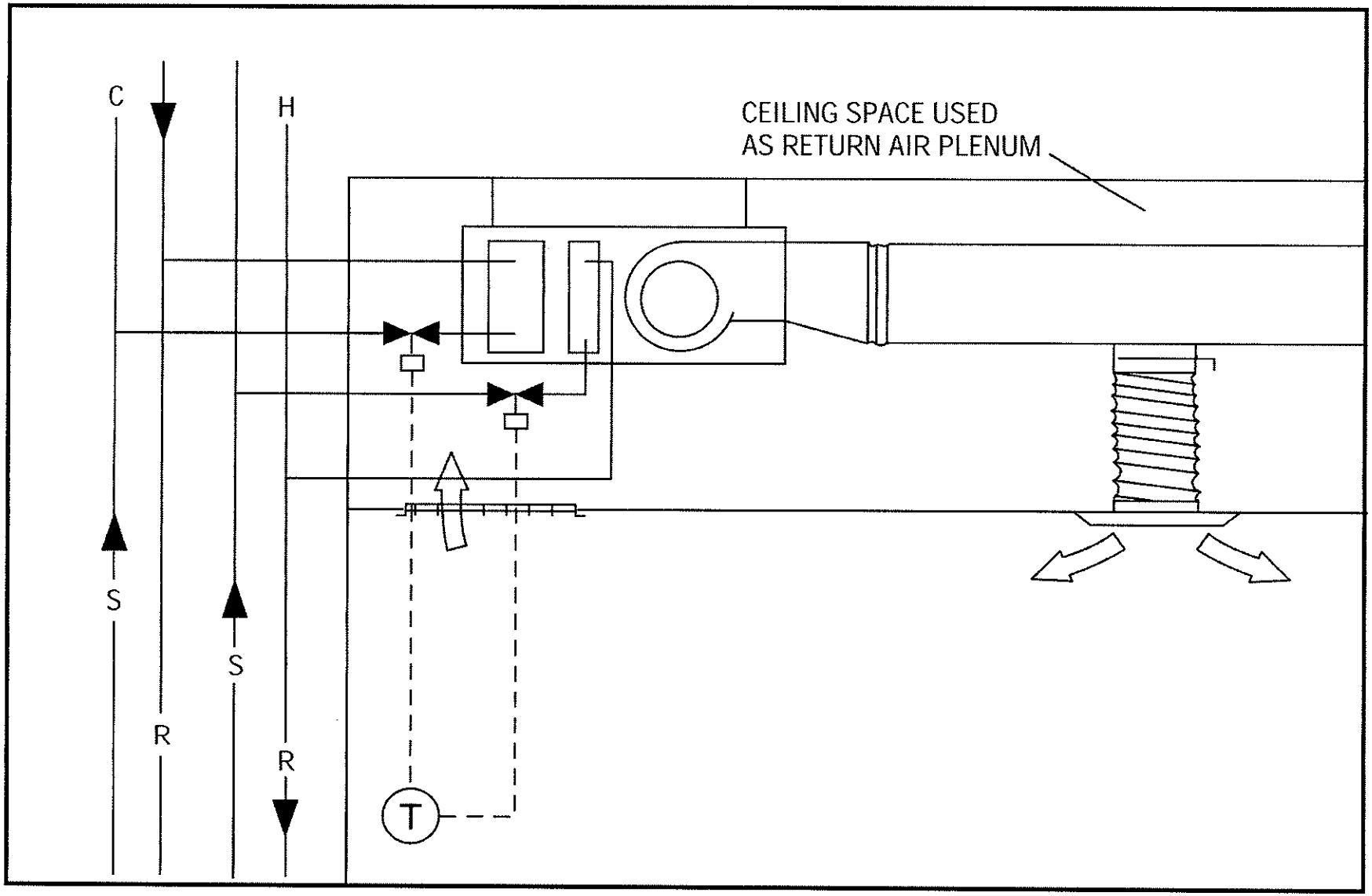

CONDUIT INDUCTION SYSTEM
SYSTEM CONTROL

Since conduit induction has both central water and central air systems, there are several system control options. It has strong advantages wherever IAQ must be good and especially where ventilation and humidity mitigation are concerns.

SYSTEM CONTROL SCHEMATIC
CONDUIT INDUCTION SYSTEM (TWO-PIPE CHANGEOVER)

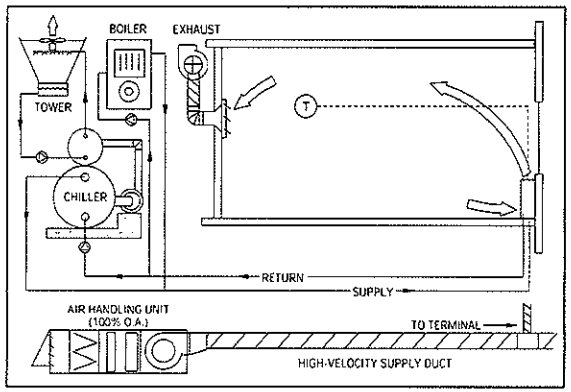

Occupied Cooling

- At time clock setting for occupied cycle, air handler fan(s) cycles on and runs constantly; also chiller, chilled water pump(s) and central exhaust systems.
- Chiller adjusts capacity in response to chilled water control loop, chilled water temperature may be reset by return water temperature, outdoor air temperature, or other block load indicator.
- (DDC) System may adapt (a different) optimal start time based on recent operating history.
- AHU coils modulated to maintain leaving air temperature, rescheduled according to outdoor air temperature and, perhaps, adjusted according to block load status (DDC).

Occupied Heating

- At time clock setting for occupied cycle, air handler fan(s) cycles on and runs constantly; also exhaust system, boiler(s) and hot water pump(s).

2-Pipe Nonchangeover
No hot water to zone induction terminals. Zone heating by primary air from air handler, with temperature scheduled to O.A. temp. or other block load indicator.
Supplementary heaters may be needed in some zones.

2-Pipe Changeover
Central boiler supplies water system below selected O.A. temperature or load status indicator (DDC). Chiller off. Hot water temperature may be scheduled from O.A. temp., return water temp., etc. Above changeover temperature, primary air (or supplementary zone heat) provides heat. Best in moderate climates where most heating loads occur in unoccupied cycle.

4-Pipe No water system changeover, per se. Chiller cycles off below its minimum capacity step. Boiler cycles on or off based on heating load, outdoor air setpoint, or some other block heating load indicator.

Unoccupied Cooling

- Central time clock shuts down chiller and pumps; also air handler and exhaust system. All these cycle, as needed, to maintain unoccupied setpoint.
- (DDC) System may adapt (a different) optimal stop time based on recent operating history.
- When outdoor air dry bulb and enthalpy permit, outdoor air may provide economizer cooling capacity for the zones (night time free cooling).

Unoccupied Heating

- Central time clock shuts down boiler and pumps; also air handler and exhaust system. Components cycle, as follows, to maintain unoccupied setpoint:

2-Pipe Nonchangeover
Air handler with electric heating coil or with hot water coil and boiler cycles to provide heating to zones via air system.

2-Pipe Changeover and 4-Pipe

- Vertical induction terminals may heat zones, by convection, without the need of air supply, eliminating fan, ventilation and exhaust energy. Boiler cycles as needed.
- Horizontal induction terminals require boiler, pump(s), exhaust and air handler to cycle.

System Changeover

2-Pipe Nonchangeover
No water system changeover. Chiller shuts down below minimum step. Air handler heating is on when zones call for heat, or coordinated with supplementary zone heaters for optimal airside changeover.

2-Pipe Changeover
Outdoor air temperature (or some other indicator of block load) changes the active central water system machine from chiller to boiler or vice versa. Pipe design and valve control must prevent thermal shock to machine from residual water in the return lines at the time of changeover. Air system strategies vary. AHU always picks up O.A. load, but may also provide some zone capacity.

4-Pipe No water system changeover, per se. Chiller cycles off below its minimum capacity step. Boiler cycles on or off, on demand. Air system as in 2-pipe c/o

SYSTEM CONTROL SCHEMATIC
CONDUIT INDUCTION SYSTEM (TWO-PIPE CHANGEOVER)

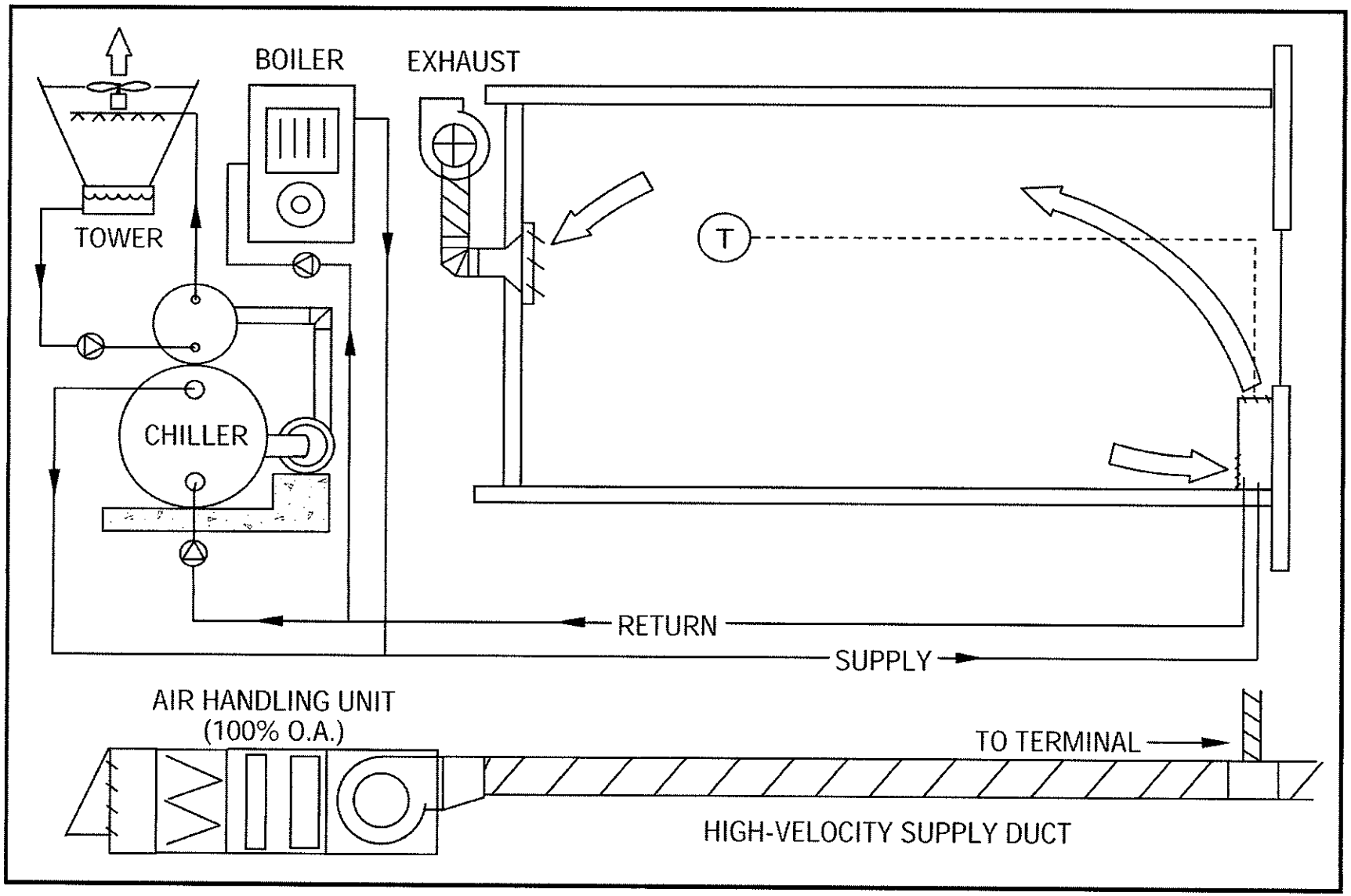

CONDUIT INDUCTION SYSTEM
TERMINAL CONTROL

Each induction terminal controls a zone. Ventilation air gives the terminal motive force for room air motion, eliminating the need for a terminal fan. Ventilation air also provides filtration, space pressurization and, where desired, zone latent capacity to avoid humidity buildup.

TERMINAL CONTROL SCHEMATIC
CONDUIT INDUCTION SYSTEM (TWO-PIPE CHANGEOVER)

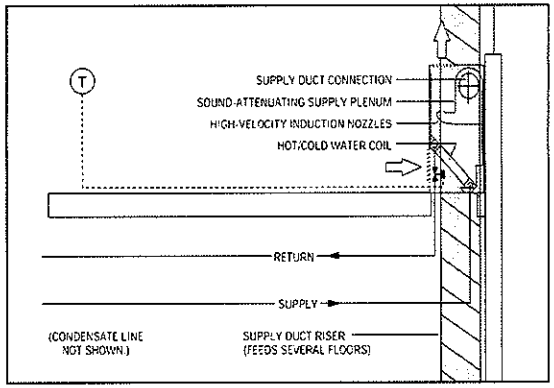

Cooling Capacity

- Sensible zone capacity is controlled by water valve modulation.
- 2-way valve yields the energy savings and diversified pipe sizing benefits of variable-volume water pumping.
- 3-way valve control produces a constant-volume water pumping situation, with quiet operation and easy balancing.
- At the least, the air system provides ventilation cooling capacity by providing neutral air to the zone. It may provide zone latent capacity by further dehumidifying the central air source. Primary air normally provides sensible zone cooling capacity. A 55F supply air temperature is typical.

Humidity Mitigation

- Ventilation does not contribute humidity to zone. It is removed centrally.
- Optimal zone humidity mitigation occurs when air system provides latent cooling capacity to the zones. This requires good dehumidifying capability in air handling unit. In humid climates, multiple cooling processes may be required (e.g. precool, reheat, primary cool). Sorbent dehumidification of outdoor air stream (followed by cooling) is a good solution.
- Zone condensate is minimized or eliminated when air system provides zone latent capacity.
  Without zone latent capacity provided by air system, the same humidity buildup problems occur at partial cooling load as with fan coils and unit ventilators (e.g. both valved control and chilled water reset cause zone humidity buildup at partial cooling load).

Heating Capacity

2-Pipe Nonchangeover

A constant volume of heated primary air provides heating capacity to zones. Chilled water reduces heating capacity, as needed, zone-by-zone.

2-Pipe Changeover and 4-Pipe

- The constant volume of primary air, supplied to each induction terminal, varies in temperature. It may be cool, neutral or warm, depending on the method for scheduling air temperature and the block load which exists.
- Peak zone heating capacity comes from a combination of centrally heated air and water.
- Water is modulated to regulate heating capacity by means of 2-way or 3-way valve.
- Hot water temperature is reset with outdoor air temperature or other block load indicator.

Ventilation

- Primary air, supplied from the central station air handling unit(s), is usually 100% outdoor air, or nearly so. This ensures positive, consistent, well-filtered, humidified or dehumidified ventilation air.
- Consistent ventilation is ensured by exhaust system, which meets code restrictions and eliminates the need for return ducting.
- Building pressurization can be positively controlled by coordinating the primary air handling unit with exhaust fan(s).
- Certified balancing of the primary air system also certifies the ventilation to each zone.

Airflow

- Constant primary air CFM to each induction terminal produces consistent zone airflow and room air motion during the occupied cycle of operation.
- The constant primary air supply to each terminal yields a consistent space noise level without local fan noise. This gives acoustical privacy without the disturbance of mechanical cycling.

TERMINAL CONTROL SCHEMATIC
CONDUIT INDUCTION SYSTEM (TWO-PIPE CHANGEOVER)

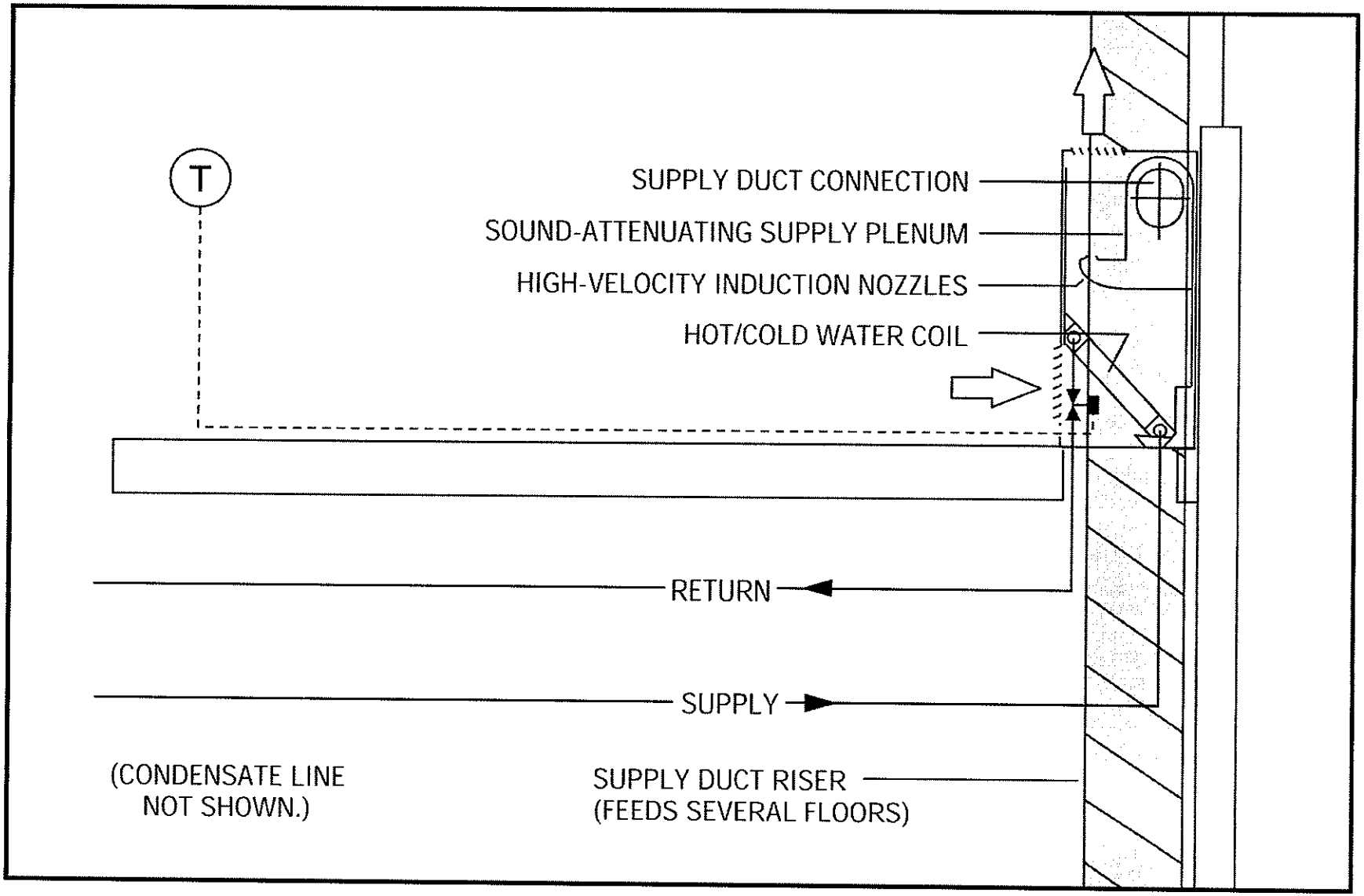

VARIABLE AIR VOLUME (VAV) SYSTEM
SYSTEM CONTROL

Variable air volume delivers a variable volume of relatively constant-temperature air from a VAV- qualified, D-X or chilled water air system. Central air handler and mechanical refrigeration controls provide the proper quality of air while responding to load variations resulting from system CFM changes.

SYSTEM CONTROL SCHEMATIC
VARIABLE AIR VOLUME (VAV) SYSTEM

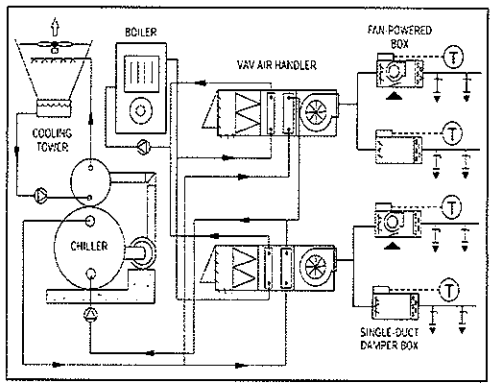

Occupied Cooling

- At occupied cycle on time, outdoor air damper opens to minimum setting and AHU fan(s) starts and runs constant; chiller or condensing unit(s) comes on the line.
- (DDC) System may adapt (a different) optimal start time based on recent operating history.
- During pulldown period, O.A. damper may remain closed to minimize load & electrical demand.
- D-X or chilled water cooling coil capacity modulated by cooling coil leaving air temperature control loop.
- Cooling coil leaving air temperature may be automatically reset by total CFM, terminal status (DDC) or other block load indicator.
- Fan static pressure control device modulates at reduced CFM to optimize fan energy saving and limit supply system static pressure/noise.
- Dry bulb or enthalpy-controlled O.A. economizer modulates outdoor/return dampers for free or reduced cost cooling, weather permitting.

Occupied Heating

- Typically not handled centrally, since occupied and lighted core zones require cooling year round. VAV can provide cooling or heating centrally but not both simultaneously.
- During warmup period, O.A. damper may remain closed to minimize load & electrical demand charges.
- Warmup cycle heating provided centrally by AHU coil, - terminals in warmup mode.
- Normal occupied cycle heat provided locally, at zones, or by separate, baseboard system (electric, hot water or steam).

Unoccupied Cooling

- Central time clock shuts down chiller, cycles ventilation dampers closed and AHUs off. AHUs and chiller, or condensing unit, cycle on as needed to maintain unoccupied setpoint.
- (DDC) System may adapt (a different) optimal stop time based on recent operating history.
- When mechanical cooling is required to maintain unoccupied setpoint, D-X or C.W. coil capacity is modulated by cooling coil leaving air temperature control loop.
- When outdoor air conditions permit, outdoor air and return air dampers modulate to provide (economizer) free-cooling at predetermined supply air temperature.

Unoccupied Heating

- Central time clock cycles ventilation dampers closed and AHUs off. AHUs and boiler cycle on as needed to maintain unoccupied setpoint.
- Central heating provided at AHU coil (electric, hot water or steam). Hot water supply temperature scheduled to outdoor air temperature.
- Terminals go full open to provide needed heating capacity and return to minimum heating position when unoccupied heating zone temperature is achieved.
- Unoccupied heating capacity may instead be provided locally, by terminal heaters or by a separate, baseboard heating system.

System Changeover

- AHUs automatically change modes from heating to cooling and vice versa, determined by building need.
- DDC system coordinates occupied AHU mode and capacity control with terminals via terminal communication system.
- Systems that serve a combination of core and perimeter zones will continually be in cooling mode during the occupied cycle.
- Unoccupied changeover initiated by outdoor air temperature, zone temperature or some other block load indicator.

SYSTEM CONTROL SCHEMATIC
VARIABLE AIR VOLUME (VAV) SYSTEM

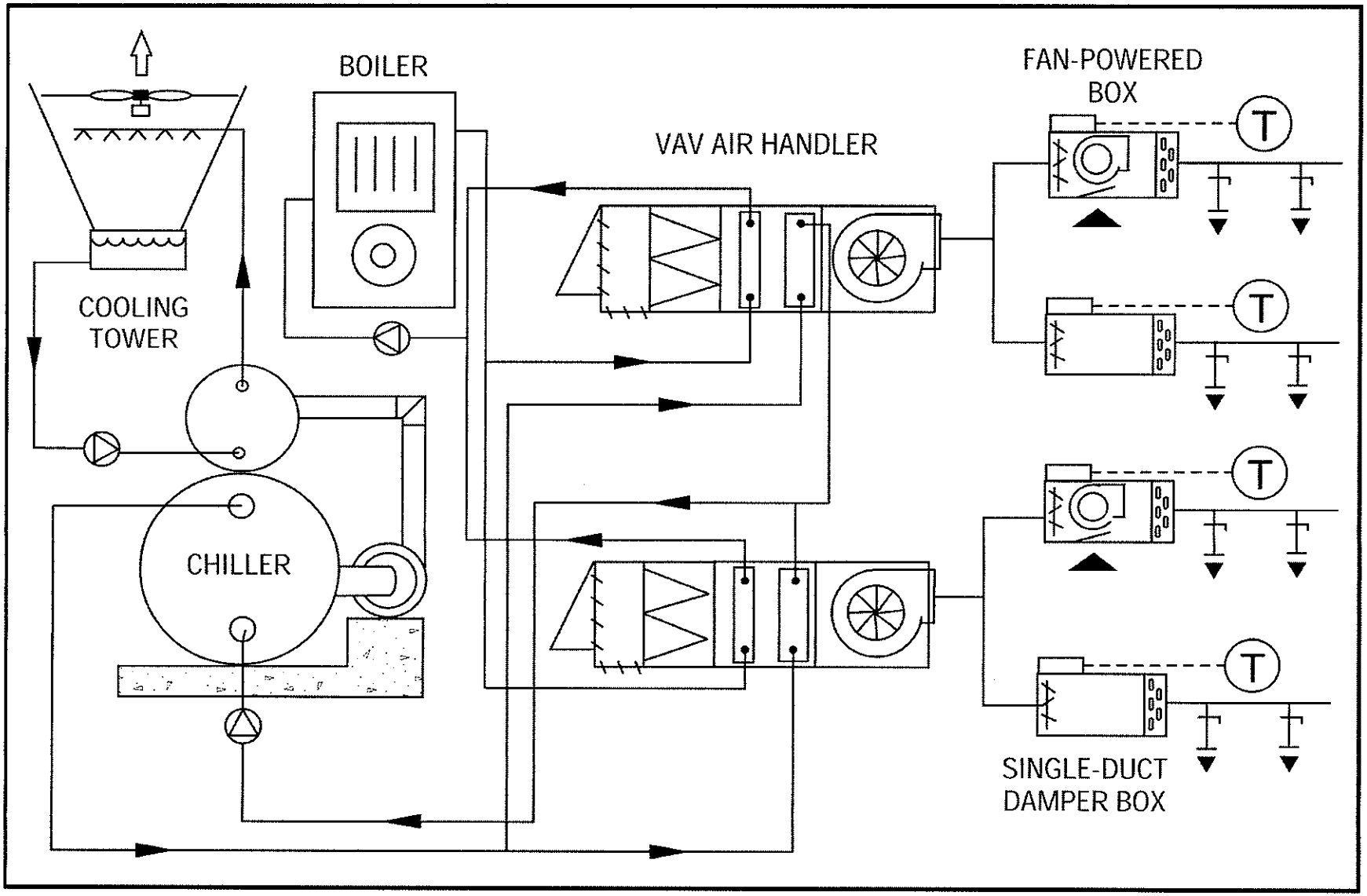

VARIABLE AIR VOLUME (VAV) SYSTEM
TERMINAL CONTROL

VAV terminals for classrooms are usually parallel or series fan-powered mixing boxes, but also may include single-duct damper boxes, which have no local fan. Local heating capacity is normally provided for perimeter zones during occupied mode of operation.

TERMINAL CONTROL SCHEMATIC
VARIABLE AIR VOLUME (VAV) SYSTEM

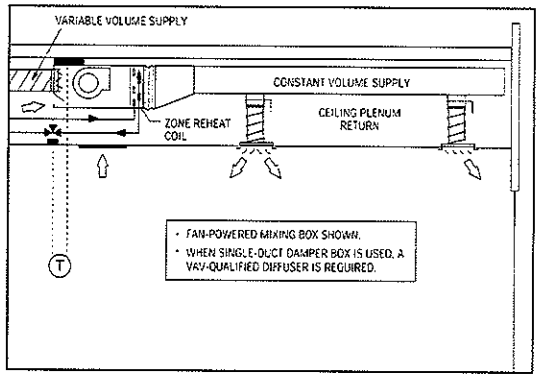

Cooling Capacity

- Single-duct damper box terminal modulates air quantity to maintain occupied or unoccupied setpoint. Variable volume, constant supply temperature to zone.
- Fan-powered mixing box terminal modulates primary air quantity and mixes it with return air from the ceiling plenum to maintain occupied or unoccupied setpoint. Variable volume, constant temperature into the box. Constant volume, variable temperature out of the box. Fan runs continuously at constant speed during occupied cycle.
- Predetermined setting limits minimum primary air quantity into box for maintaining adequate ventilation (and room air motion for single duct damper boxes).
- Minimum primary air CFM settings will overcool some spaces. Zone reheat coil needed.

Humidity Mitigation

- Constant, occupied cycle central AHU cooling prevents humidity buildup at partial cooling load.
- VAV-qualified equipment provides capacity steps that limit humidity buildup.
- AHU leaving coil temperature control permits designer to limit humidity buildup at partial cooling load. Leaving air temperature may be reset lower to mitigate excessive space humidity, at the expense of increased zone reheating.
- Resetting leaving coil temperature upward at partial cooling load to save operating cost will contribute to humidity buildup.

Heating Capacity

- Unoccupied heating capacity may be supplied centrally, when fossil fuel provides economic benefit and hot water is not available at the zones.
- Occupied heating capacity (electric or hot water coil) is provided at the terminal to temper minimum cool supply CFM in zones experiencing low cooling load, no load or heating load.
- Separate baseboard system (hot water, steam or electric) may provide zone heat.
- With fan-powered mixing box, unoccupied zone heating may be provided locally with central AHU shut down.

Ventilation

- Ventilation is provided by the central station AHU during occupied cycle and is shut off during the unoccupied cycle.
- Ventilation quantity varies with air handler CFM, unless outdoor air % is increased as air handler CFM decreases.
- Minimum zone CFMs are established, in part, based on minimum ventilation requirements.
- In O.A. economizer mode, ventilation % varies from minimum setting up to 100% outdoor air, depending on O.A. conditions.

Airflow

- Fan-powered mixing box provides constant CFM to each zone, permitting the use of standard diffusers and giving a consistent room noise level.
- Single-duct damper box provides variable CFM to each zone, requiring VAV-qualified diffusers.
- Minimum primary air CFM ensures adequate primary air and ventilation air. Minimum and maximum box CFMs are configurable at the jobsite.

TERMINAL CONTROL SCHEMATIC
VARIABLE AIR VOLUME (VAV) SYSTEM

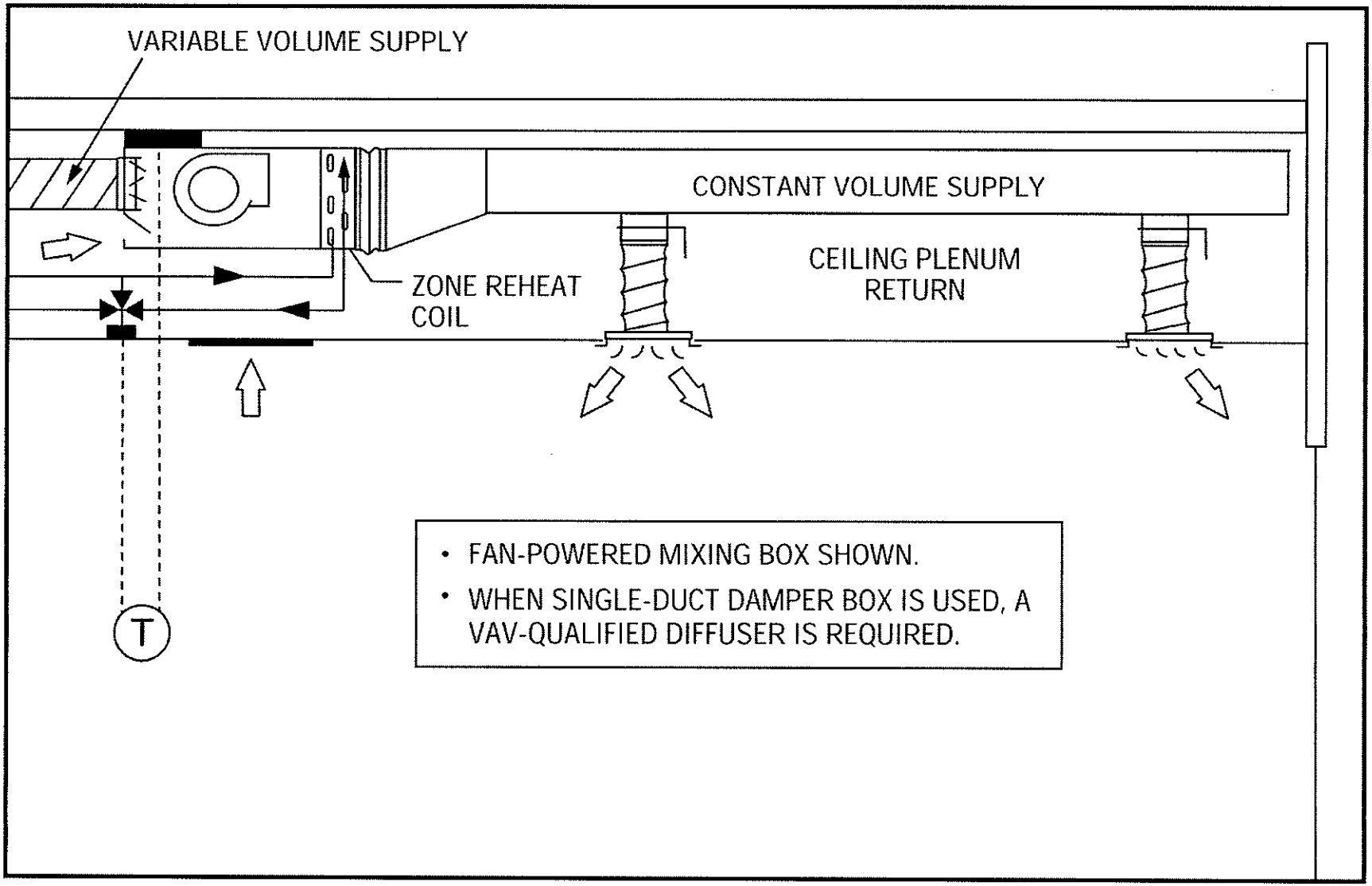

MULTI-ZONE SYSTEM
SYSTEM CONTROL

Almost everything happens centrally with both packaged and central station multizone air systems. Multizone delivers a constant volume of variable-temperature air by means of a dedicated supply duct to each zone. Central air handler and mechanical refrigeration controls provide the proper quality of air for the zones. 2-Deck units have cold and bypass or cold and hot decks with zoning dampers. 3-Deck units have cold, bypass & hot air decks with zoning dampers. Modular units (packaged rooftop) have a dedicated heating and cooling coil for each zone, with no zoning dampers.

SYSTEM CONTROL SCHEMATIC
MULTI-ZONE SYSTEM

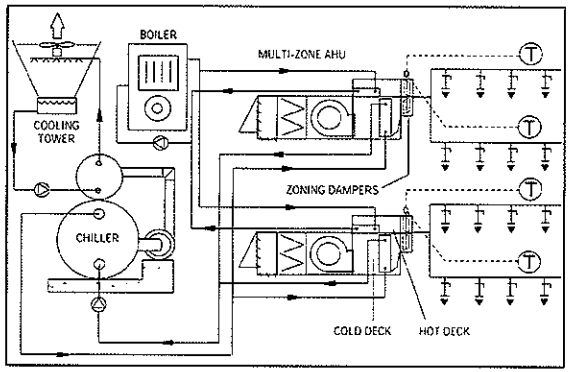

Occupied Cooling

- At occupied cycle on time, outdoor air damper opens to minimum setting and AHU fan(s) starts and runs constant; chiller or condensing unit comes on the line.
- (DDC) System may adapt (a different) optimal start time based on recent operating history.
- During pulldown period, O.A. damper may remain closed to minimize load & electrical demand.
- D-X or chilled water cooling coil capacity modulated by cooling coil leaving air temperature control loop.
- Cooling coil leaving air temperature may be automatically reset (up) by outdoor air temperature, cold deck CFM, zone status (DDC) or other block load indicator.
- Dry bulb or enthalpy-controlled O.A. economizer modulates outdoor/return dampers for free or reduced - cost cooling, weather permitting.

Occupied Heating

- (2-Deck) Typically not handled centrally to avoid the energy waste of mixing heated and cooled airstreams when some zones require heating while others require cooling.
- (3-Deck) Occupied heating handled centrally.
- Since occupied and lighted core zones require cooling year round, cooling is provided year round. Central heating coil inactive during occupied cycle, after warmup period (2-Deck). (3-Deck) Central heating coil active as needed.
- Hot deck coil active during morning warmup cycle to provide heating cycle centrally. O.A. damper closed to minimize energy usage.
- (2-Deck) Non-warmup occupied cycle heating provided locally at zones. (3-Deck) Provided centrally by hot deck.

Unoccupied Cooling

- Central time clock shuts down chiller, cycles ventilation dampers closed and AHUs off. AHUs and chiller, or condensing unit, cycle on as needed to maintain unoccupied setpoint.
- (DDC) System may adapt (a different) optimal stop time based on recent operating history.
- When mechanical cooling is required to maintain unoccupied setpoint, D-X or C.W. coil capacity is modulated by cooling coil leaving air temperature control loop.
- When outdoor air conditions permit, outdoor air and return air dampers modulate to provide (economizer) free-cooling at predetermined supply air temperature.

Unoccupied Heating

- Central time clock cycles ventilation dampers closed and AHUs off. AHUs and boiler cycle on as needed to maintain unoccupied setpoint.
- Central heating provided at AHU hot deck coil (hot water or steam). Hot water supply temperature scheduled to outdoor air temperature.
- The cold deck coil remains inactive during unoccupied heating operation.
- (2-Deck) Unoccupied heating capacity may be provided locally, by zone duct heaters or by a separate, baseboard heating system. In this case, no heating coil is needed in the AHU hot deck and hot deck becomes bypass air deck.

System Changeover

- Where core zones are involved, the cold deck coil will be active year - round during the occupied cycle.
- (2-Deck) Hot deck coil inactive year - round during occupied cycle except for morning warmup.
- (3-Deck) Hot deck active in both occupied and unoccupied cycles when zones require heat.
- The boiler, which feeds the zone heating coils and/or hot deck, is activated, and water temperature scheduled by outdoor air temperature, zone status feedback (DDC) or other suitable block load indicator.
- Unoccupied changeover initiated by predetermined O.A. temperature, key zone temperature, or other suitable block load indicator.

SYSTEM CONTROL SCHEMATIC
MULTI-ZONE SYSTEM

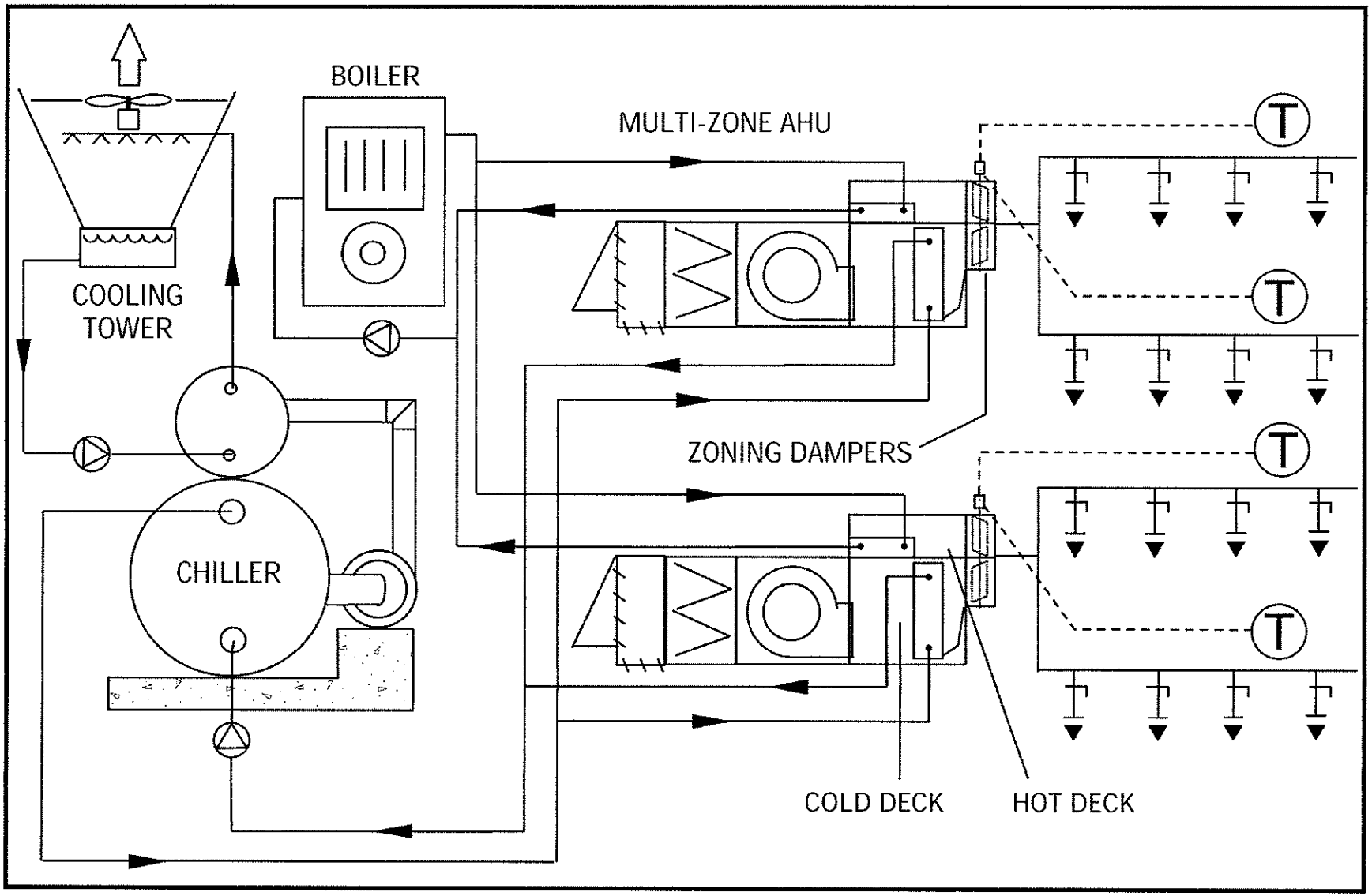

MULTI-ZONE SYSTEM
TERMINAL CONTROL

The cooling terminal for a multizone unit is either cold deck dampers, back at the central AHU, or modular cooling coils (one per zone) back at the packaged rooftop (modular) multizone unit. For 2-Deck units, the heating terminal is a zone heating coil, installed somewhere in the zone's main supply duct, or a modular heating section in a (modular) packaged rooftop multizone unit, or hot deck dampers for a 3-Deck unit.

TERMINAL CONTROL SCHEMATIC
MULTI-ZONE SYSTEM

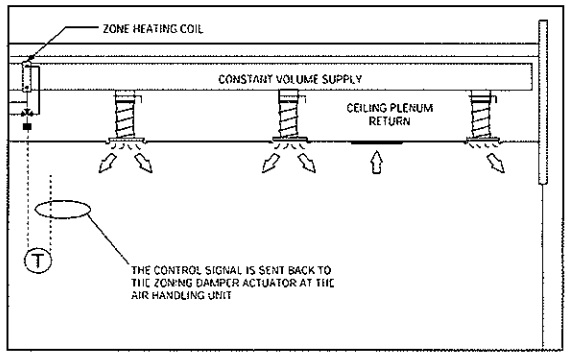

Cooling Capacity

- ***Packaged (modular) Multizone***: Zone D-X cooling coil cycles on and off in response to zone thermostat.
- ***Conventional Multizone AHU:*** Zone damper modulates in response to zone thermostat, mixing cold deck air with bypassed air from the inactive hot deck (2-Deck) or from the bypass deck (3-Deck). Full mixing range available for each zone - from 100% bypassed to 100% cold deck air.
- Central AHU functions as zoning face and bypass unit.
- Zone heating coil (2-Deck) or zone heating damper (3-Deck) may be run simultaneously with cool air supply for zones where reheat is needed in order to directly control zone relative humidity.

Humidity Mitigation

- Constant central AHU cooling during the occupied cycle helps to limit humidity buildup at partial cooling load.
- Zone heating coils (2-Deck) or hot deck dampers (3-Deck) may function in reheat mode for zones requiring humidity control.
- Resetting cold deck leaving air temperature upward as load decreases will contribute to humidity buildup at partial cooling load.
- Cycling of zone D-X cooling coils in packaged rooftop (modular) multizone contributes to humidity buildup at partial cooling load. However, modular heating coil can be operated simutaneously with cooling coil, as needed, to gain humidity control on a zone-by-zone basis.

Heating Capacity

- (2-Deck) Unoccupied heating capacity may be provided centrally, at AHU, when fossil fuel provides economic benefit and hot water is not available at the zones. It is provided centrally, at AHU, in any case when 3-Deck is used.
- (2-Deck) Unoccupied heating capacity may be provided locally by zone (duct) heating coils, in which case the AHU needs no hot deck coil.
- (2-Deck) Occupied cycle heating provided locally, by zone (duct) heating coils (electric, hot water or steam).
- Packaged rooftop (modular) multizone heating capacity comes from a heating module (gas, hot water or electric) in each zone section of the rooftop.
- Zone heating coils (2-Deck) or dampers (3-Deck) may function in reheat mode.

Ventilation

- Ventilation is provided by the central AHU during occupied cycle and is shut off during the unoccupied cycle.
- Ventilation quantity is consistently at or above the adjustable minimum position.
- In outdoor air economizer mode, ventilation % varies from minimum up to 100% outdoor air, depending on O.A. conditions and space load.

Airflow

- Airflow to each zone is constant, providing consistent room air motion, ventilation and noise level.
- Constant zone CFM permits the use of standard diffusers and ductwork.
- Airflow is generated by central fan, far from the conditioned space, reducing zone noise contribution from mechanical systems, and making fan servicing central, away from the occupied areas.

TERMINAL CONTROL SCHEMATIC
MULTI-ZONE SYSTEM

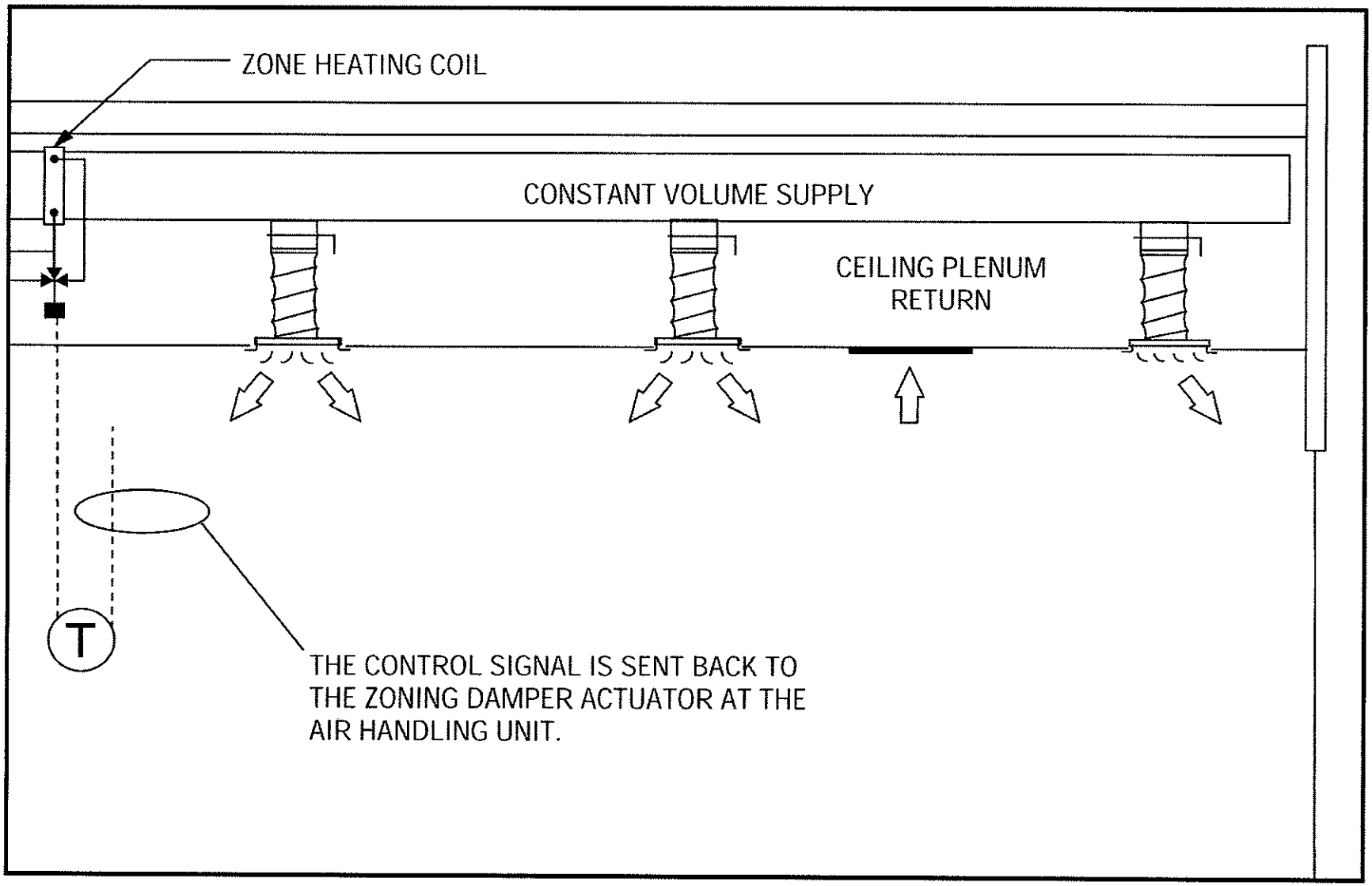

DOUBLE-DUCT SYSTEM
SYSTEM CONTROL

Double duct air systems centrally condition and distribute two supply air streams, one cold and the other bypassed, or else one hot and the other bypassed. Central air handler and mechanical refrigeration controls provide the proper quality of air for the two supply ducts.

SYSTEM CONTROL SCHEMATIC
DOUBLE-DUCT SYSTEM

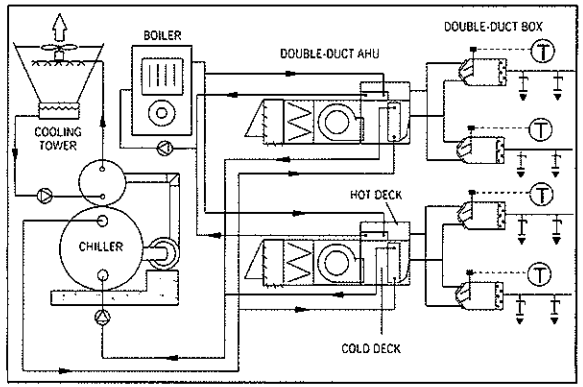

Occupied Cooling

- At occupied cycle on time, outdoor air damper opens to minimum setting and AHU fan(s) starts and runs constant; chiller or condensing unit comes on the line.
- (DDC) System may adapt (a different) optimal start time based on recent operating history.
- During pulldown period, O.A. damper may remain closed to minimize load & electrical demand.
- D-X or chilled water cooling coil capacity modulated by cooling coil leaving air temperature control loop.
- Cooling coil leaving air temperature may be automatically reset (up) by outdoor air temperature, cold deck CFM, zone status (DDC) or other block load indicator.
- Dry bulb or enthalpy-controlled O.A. economizer modulates outdoor/return dampers for free or reduced - cost cooling, weather permitting.

Occupied Heating

- Typically not handled centrally to avoid the energy waste of mixing heated and cooled airstreams.
- Since occupied and lighted core zones require cooling year round, cooling is provided year round. Central heating coil inactive during occupied cycle, after warmup period.
- Hot deck coil active during morning warmup cycle to provide heating cycle centrally. O.A. damper closed to minimize energy usage.
- Non-warmup occupied cycle heating provided locally at zones.

Unoccupied Cooling

- Central time clock shuts down chiller, cycles ventilation dampers closed and AHUs off. AHUs and chiller, or condensing unit, cycle on as needed to maintain unoccupied setpoint.
- (DDC) System may adapt (a different) optimal stop time based on recent operating history.
- When mechanical cooling is required to maintain unoccupied setpoint, D-X or C.W. coil capacity is modulated by cooling coil leaving air temperature control loop.
- When outdoor air conditions permit, outdoor air and return air dampers modulate to provide (economizer) free-cooling at predetermined supply air temperature.

Unoccupied Heating

- Central time clock cycles ventilation dampers closed and AHUs off. AHUs and boiler cycle on as needed to maintain unoccupied setpoint.
- Central heating provided at AHU hot deck coil (hot water or steam). Hot water supply temperature scheduled to outdoor air temperature.
- The cold deck coil remains inactive during unoccupied heating operation.
- Unoccupied heating capacity may be provided locally, by double duct terminal heating coil or by a separate, baseboard heating system. In this case, no heating coil is needed in the AHU hot deck.

System Changeover

- Where core zones are involved, the cold deck coil will be active year - round during the occupied cycle.
- Hot deck coil inactive year - round during occupied cycle except for morning warmup.
- The boiler, which feeds the zone heating coils in the double duct boxes, is activated, and water temperature scheduled, by outdoor air temperature, zone status feedback (DDC) or other suitable block load indicator.
- Unoccupied changeover initiated by predetermined O.A. temperature, key zone temperature, or other suitable block load indicator.

SYSTEM CONTROL SCHEMATIC
DOUBLE-DUCT SYSTEM

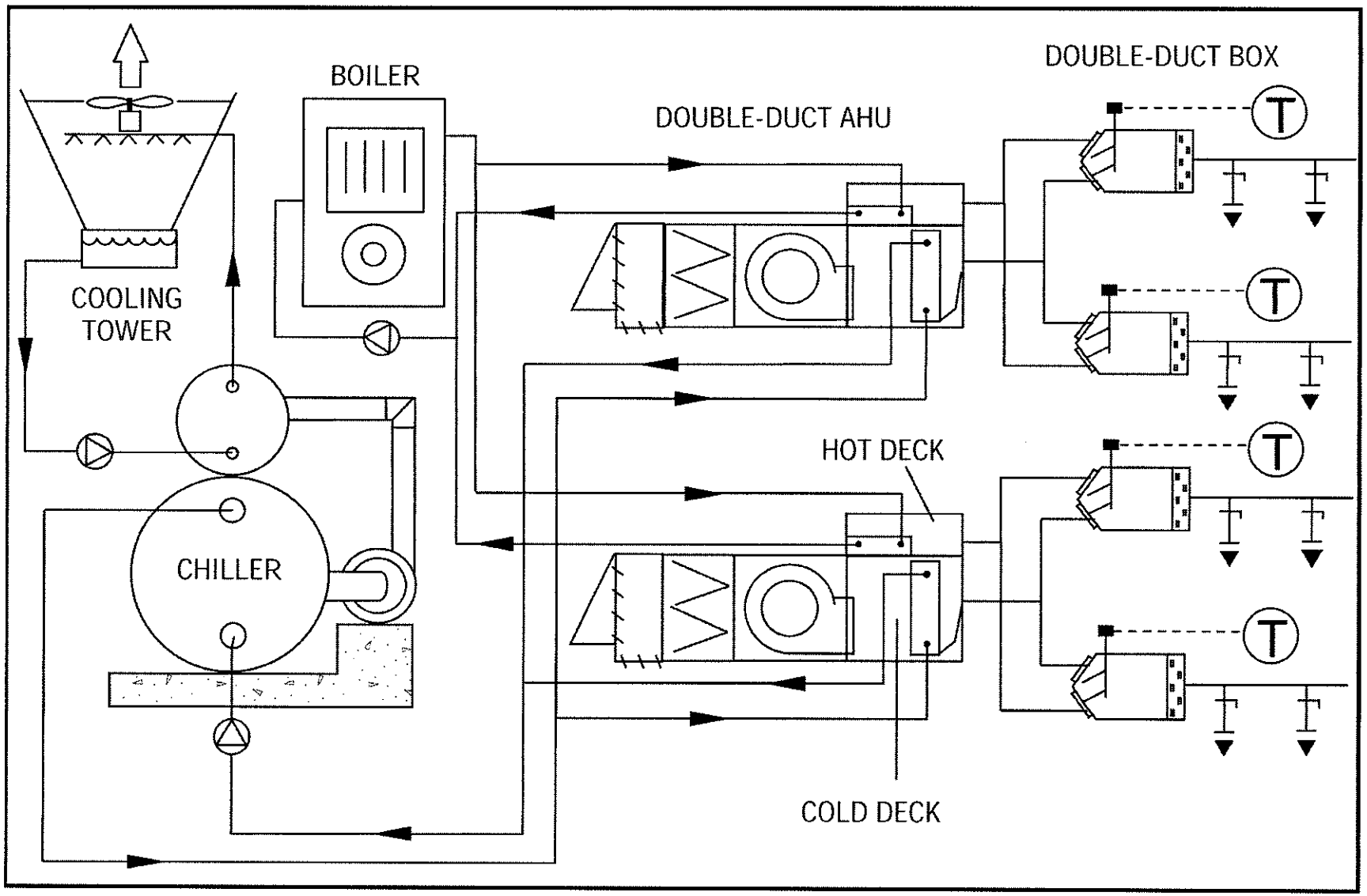

DOUBLE-DUCT SYSTEM
TERMINAL CONTROL

The terminal for a double duct system is the double duct box which controls each zone. The box mixes two different temperature airstreams (one cold and the other bypassed [warmer], or else one hot and the other bypassed [cooler]) to meet the zone sensible load.

TERMINAL CONTROL SCHEMATIC
DOUBLE-DUCT SYSTEM

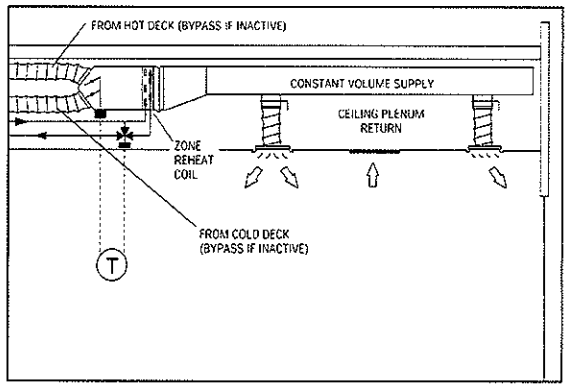

Cooling Capacity

- Cooling damper in double duct box modulates open (and bypassed air damper modulates closed) in response to zone thermostat calling for cooling.
- Box mixes cold deck air with bypassed air coming from inactive hot deck, giving zoned face and bypass effect.
- Full mixing range available for each zone, from 100% bypassed to 100% cold deck air. Box CFM remains relatively constant through modulation range.
- Box heating coil may be run simultaneously with cool air supply, where reheat is needed to directly control zone relative humidity.

Humidity Mitigation

- Constant occupied cycle central station AHU cooling prevents humidity buildup at partial cooling load.
- Zone heating coils may function in reheat mode for zones requiring humidity control.
- Resetting cold deck leaving air temperature upward as load decreases will contribute to humidity buildup at partial cooling load.

Heating Capacity

- Occupied cycle heating provided locally, by zone (double duct box) heating coil (electric, or hot water).
- ***Occupied Cycle Heating:*** Cooling damper in double duct box modulates closed (and bypassed air damper modulates open) in response to zone thermostat calling for heating.
- Unoccupied heating capacity may be provided centrally, when fossil fuel provides economic benefit and hot water is not available at the zones.
- Unoccupied heating capacity may be provided locally by zone (double duct box) heating coils, in which case the AHU needs no hot deck coil.
- Zone heating coils may function in reheat mode.

Ventilation

- Ventilation is provided by the central AHU during occupied cycle and is shut off during the unoccupied cycle.
- Ventilation quantity is consistently at or above the adjustable minimum position.
- In outdoor air economizer mode, ventilation % varies from minimum up to 100% outdoor air, depending on O.A. conditions and space load.

Airflow

- Airflow to each zone is constant, providing consistent room air motion, ventilation and noise level.
- Constant zone CFM permits the use of standard diffusers and ductwork.
- Airflow is generated by central fan, far from the conditioned space, reducing zone noise contribution from mechanical systems, and making fan servicing central, away from the occupied areas.

TERMINAL CONTROL SCHEMATIC
DOUBLE-DUCT SYSTEM

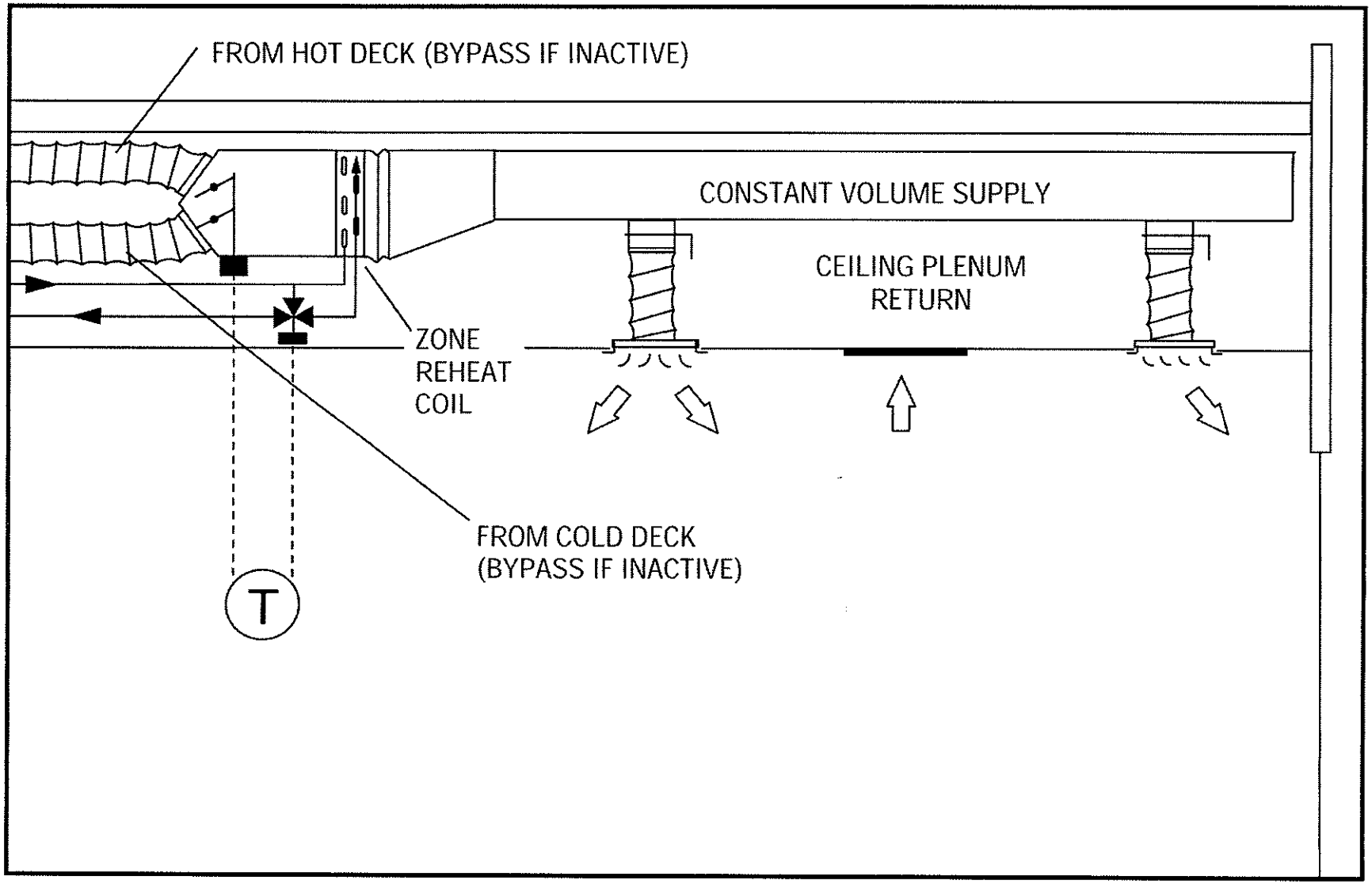

DESIGN CHECKLIST STEPS

Having selected the fan coil units and the air handling units for the design project, we now need to consider how to control this equipment. Among other things, control involves piping layout choices at the coils and control valve selection.

In the "Design Checklist Steps", shown below, you can see where terminal control selection fits in the sequence of design steps for a water system.

DESIGN CHECKLIST STEPS

- Select control zones
- Calculate peak zone cooling and heating loads
- Select room fan coil terminals
- *Select type of terminal controls*
  - *For fan coil terminals*
  - *For central air handling unit*
- Make piping layout
- Make condensate drain layout
- Select refrigeration machine
- Select auxiliary equipment

FAN COIL TERMINAL CONTROL

There are two possible ways to control the capacity of the room fan coil terminal. One is to control the flow of air over the coil, while the second is to control the water flowing through the coil in the terminal. Each method has its advantages and disadvantages.

Control of Water Flow:
There are two ways in which the water flow through the coil is possible:
1- Turn the water flow on or off. Valves which accomplish this are called on/off or two-position valves. This is typically done with two-way valves, however, it can also be accomplished with the use of three-way valves, which have two ports; one in and one out.
2- Modulate the water flow by using a modulating control valve. When waterside control is employed by the use of water control valves, the air is allowed to flow continuously across the coil.

Control of Air Flow:
There are three ways to control the flow of air across the coil:
1- Manually turn the fan on or off
2- Manually select from multiple fan speeds
3- Automatically cycle the fan on and off
In the above three methods, the water is allowed to flow continuously through the coil at design flow.

In this segment, each method will be explored.

FAN COIL TERMINAL CONTROL

- **Two Types of Control**
  - Control flow of water
  - Control flow of air
- **Control of Water Flow**
  - ON-OFF control (standard)
  - Two way valves
  - Three way valves
  - Modulating control (special)
- **Control of Air Flow**
  - Manual ON-OFF control
  - Manual multi-speed control
  - Automatic ON-OFF control
- **Let's explore each method**

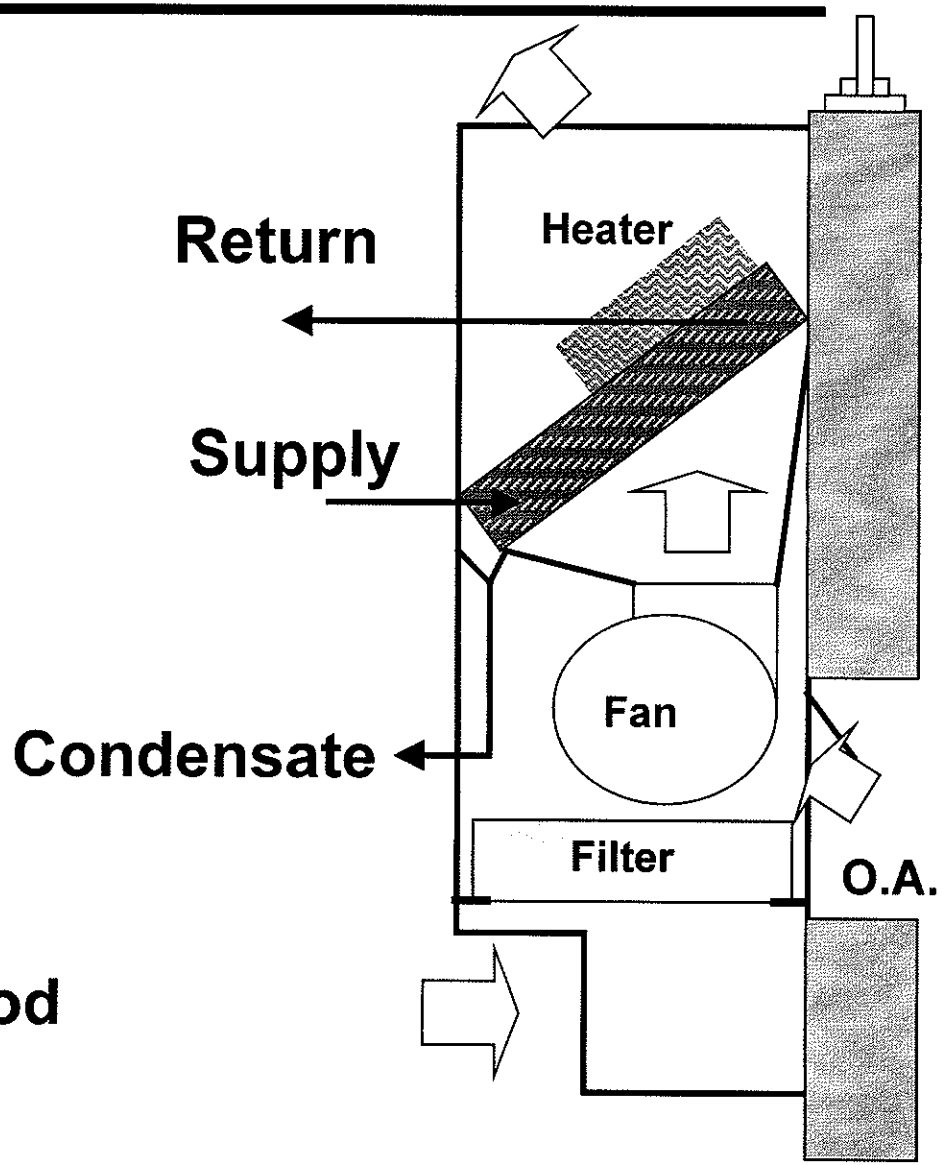

WATER VALVE COIL CONTROL

When water valves are used to control the flow through a terminal's coil, either a two way or a three way valve can be selected.

Two Way Valve:

If the two way valve is a modulating type, the flow through the coil will decrease with room load. At some point the velocity through the coil will fall below the laminar flow criteria and the coil heat transfer performance will fall off rapidly. At this point, the control valve will lose control of the room temperature. Two-design (on-off) valves eliminate this problem and also reduce installed cost.

If the two way valve is the on-off variety, the flow through the coil is never laminar - flow being either 100% or 0%. The valve action, however, can be either snap action or gradual movement from open to close and vice versa. Some designers prefer the timed opening valve to eliminate possible noise associated with a snap action valve.

When two-way valves are used to control from fan coil or unit ventilator terminals, the flow will be variable. The variable water volume reduces operating cost for the pumps. However, both the chiller and pump are sensitive to minimum flow. The pump can be dead headed and overheat. The cooler chiller evaporator can have the tube velocity fall into the laminar region causing the chiller to trip off the line on low refrigerant temperature.

Therefore, although they are the least costly valve control method, two way valves require a chiller bypass system of some sort to maintain a safe minimum chiller and pump flow. Also, the design circuit flow rate is based on a diversified GPM since not all on-off valves will be open simultaneously and not all modulating valves will be full open. The valve action will follow the loads on the exposures and each exposure peaks at a different time of day.

Three Way Valves:

With modulated three way terminal valves, flow through the terminal coils can still become laminar as water is bypassed around the coil. If a two position three-way valve is used, however, this problem goes away.

Flow through the piping system is relatively constant since water is either flowing through each coil or around each coil. Thus, the chiller and pump experience constant flow, and the GPM pumped is the sum of the peak GPM's required on each building exposure.

Higher pumping and valve costs result when this system is employed. Piping costs may also be higher due to somewhat larger mains.

Typically, snap action two way valve control is employed due to its overall lower first and operating costs.

TWO-WAY MODULATING VALVE

- Throttle water flow through coils
  - Laminar flow at low load
- Variable circuit flow
- Variable water volume energy savings
- Chiller minimum flow
  - Laminar part load flow
- Pump minimum flow
  - Dead head pump
- Bypass protection needed
- Low cost control
- Can use GPM diversity
  - Not all exposures peak at same time

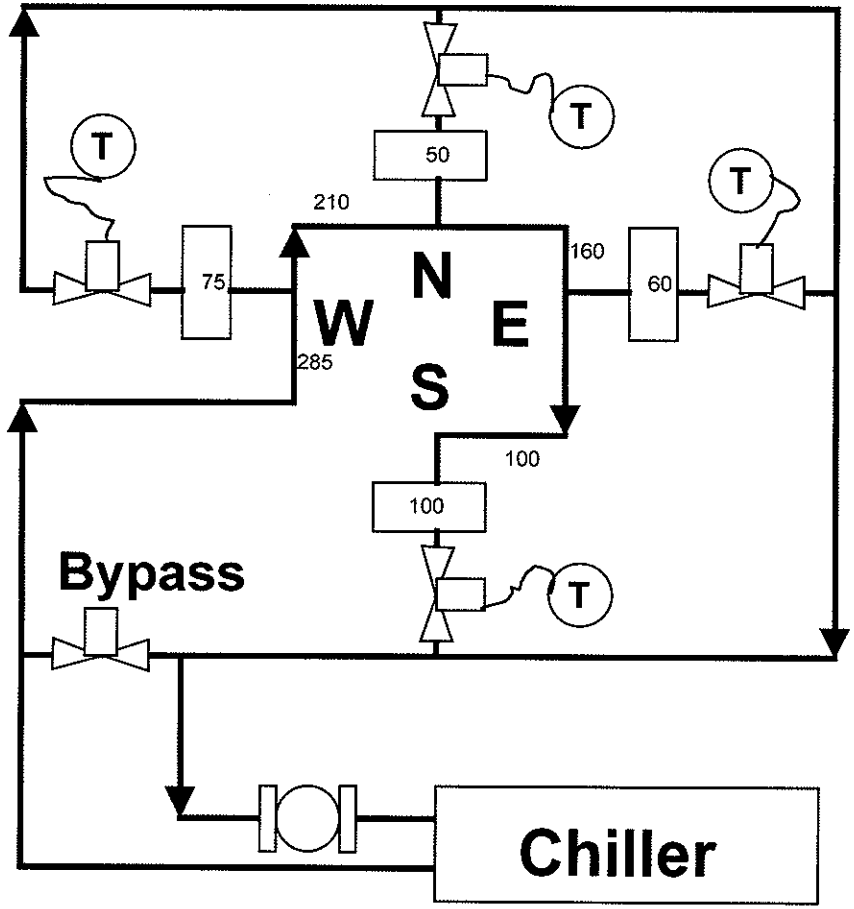

Supply GPM's

Exposure	W	N	E	S	Tot
Peak GPM	210	160	100	285	285
Design GPM	153	131	100	191	191
Div. Mult.	.73	.82	1.0	.67	

TWO-WAY ON-OFF VALVE

- Full or 0% flow through coils
  - No laminar flow problem
- Variable circuit flow
- Variable water volume energy savings
- Chiller minimum flow
  - Laminar part load flow
- Pump minimum flow
  - Dead head pump
- Bypass protection needed
- Low cost control
- Can use GPM diversity
  - Not all valves open at same time

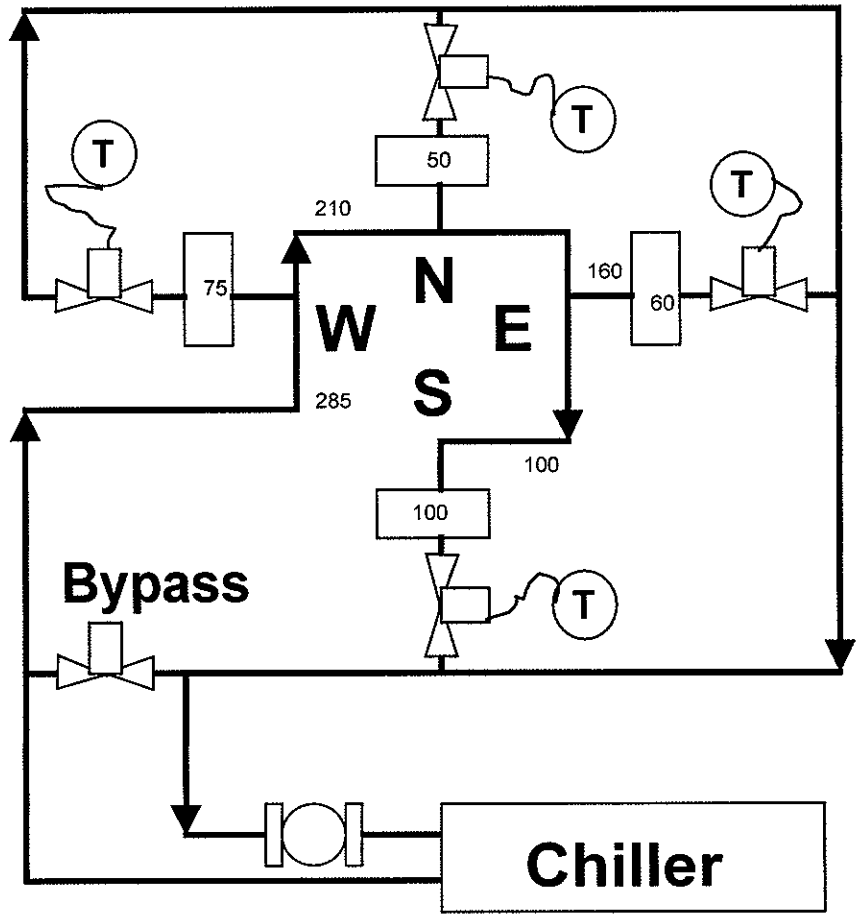

Supply GPM's					
Exposure	W	N	E	S	Tot
Peak GPM	210	160	100	285	285
Design GPM	153	131	100	191	191
Div. Mult.	.73	.82	1.0	.67	

THREE-WAY VALVE
(ON, OFF OR MODULATING)

- Throttle water flow through coils
  - Laminar part load flow
- Constant circuit and main flow
- Chiller flow constant
- Pump flow constant
- No variable water flow energy savings
- No bypass needed
- More costly control package
- Cannot use GPM diversity
  - Peak flow at each exposure at all times

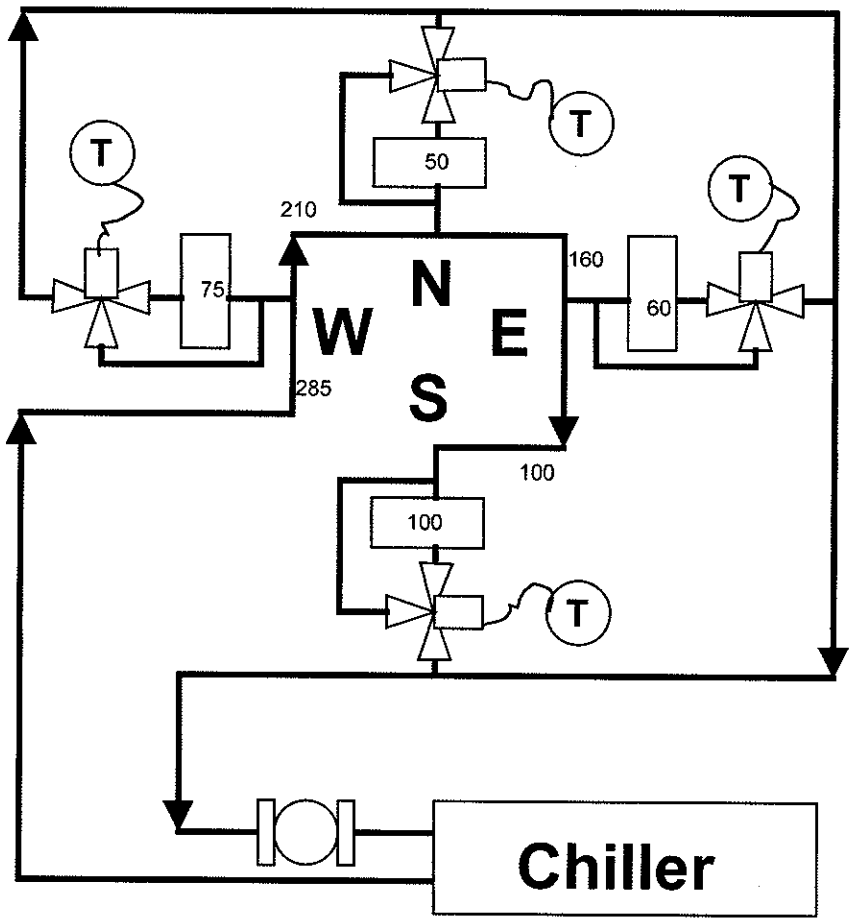

Exposure	W	N	E	S	Tot
Peak GPM	210	160	100	285	285
Design GPM	210	160	100	285	285

AUTOMATIC ON-OFF WATER FLOW
(Good Temperature Control/% RH Climbs)

This two-position control system uses an internally mounted thermostat with remote bulb in the return air stream. Since the supply is turned on and off at partial cooling load, there is a fluctuation in leaving air temperature from the unit. In most instances, this is not at all objectionable when properly designed and it seems to be a satisfactory approach to the problem.

The result on room dry bulb temperature and room relative humidity are shown on the page below. Since a thermostat controls the action of the on-off water valve, good control of room dry bulb temperature is accomplished with fluctuations of up to plus or minus two degrees around the room setpoint. When it comes to the humidity mitigation, however, a less favorable result occurs. Since the only way the terminal can reduce room latent load is by condensing the moisture out of the return air on the surface of the coil, moisture is removed only when water is flowing through the coil. In the off cycle, the coil surface temperature rises, no condensation takes place, and room %RH climbs. In fact, during the off cycle, the air will re-evaporate moisture on the coil surface back into the room. The result - poor %RH mitigation.

This method of control is popular because it is inexpensive to provide, and relies on the fact that occupants are likely to tolerate a large swing in relative humidity and still consider themselves comfortable. Also, since the fan runs continuously, the constant sound level in the room caused by fan noise is an acceptable background noise to occupants.

The interruption of water flow can be obtained with either snap acting devices that open and close instantly or with motor operated devices that open and close very slowly. There are obvious advantages to the slow acting device in that the sounds occasionally experienced with the snap acting device are eliminated. This is especially important in sleeping or conference rooms where sounds of this type are annoying and undesirable.

This control strategy can make use of either a two-way or three-way valve for the terminal. The same system tradeoffs apply to the choice of valves mentioned earlier.

AUTOMATIC ON-OFF WATER FLOW
(Good Temperature Control / % RH Climbs)

- Constant air flow
- Cycle water flow on-off
- Entering chilled water temp. 45F (1)
- Coil surface temp. F (2)
- Room Dry Bulb Range - F (3)
- Room Relative Humidity Range % (4)
  - Poor humidity mitigation at partial load

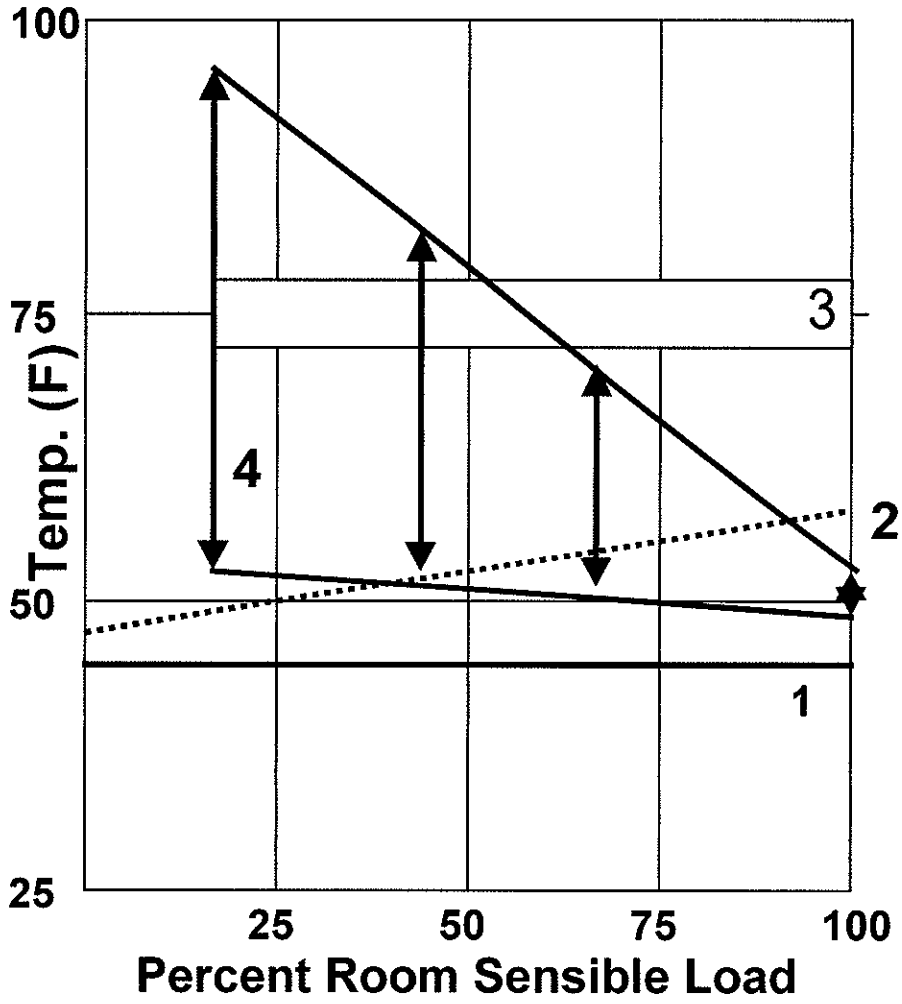

MODULATING WATER VALVE
(Excellent Dry Bulb Control/% RH Climbs)

When choosing a waterside control technique, the most desirable and proper control system from a standpoint of dry bulb temperature control is one in which the quantity of water being admitted to the unit is modulated by a valve controlled by a remote bulb in the space being conditioned. This results in modulation of the leaving air temperature from the unit, with the result that the capacity of the unit exactly equals the room load regardless of how small the load might be. This is true on both heating and cooling operation and, in general, the room occupant fails to realize that the unit is even in operation.

Room relative humidity, however, increases at partial cooling load. As water flow is reduced through the coil at part load, the coil surface temperature rises. The coil apparatus dewpoint (ADP) rises at part load - reducing the coil's ability to remove moisture from the room return air.

Since the modulating type control system is costly when compared with the total unit cost, a two-position valve is usually used instead.

It must also be realized that in a cooling and heating application, the use of a single thermostat requires an additional device to change over from cooling to heating mode; in other words, to make it operate on a drop rather than on a rise in surface temperature. The cost of this summer-winter switching function must also be included in any economic consideration.

MODULATING WATER VALVE
(Excellent Dry Bulb Control / % RH Climbs)

- Constant air flow
- Entering chilled water temp. 45F (1)
- Coil surface temp. F (2)
- Room Dry Bulb - F (3)
- Room Relative Humidity % (4)
  - Poor humidity mitigation
  - Rising ADP at part load

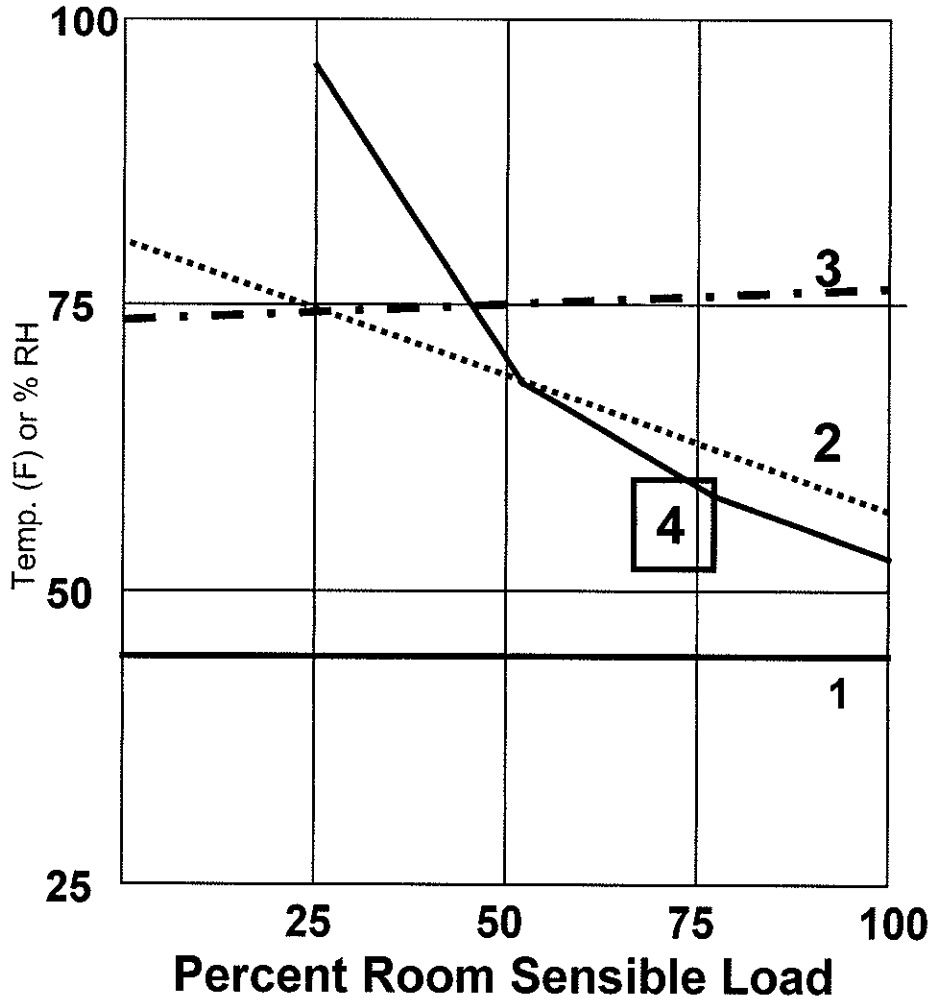

HOT WATER TEMPERATURE RESET

Where hot water is used for zone heating, it is always desirable during the heating season to modulate the temperature of the hot water being supplied by an outdoor air temperature compensator. This practice is typically called 'hot water reset".

In almost every instance, the amount of heat transfer surface area supplied in any coil is determined by the cooling loads and chilled water temperatures available. This quantity of heat transfer surface invariably exceeds the requirements for heating when normal hot water temperatures are supplied.

Therefore, in order to enhance boiler efficiency and reduce hot water piping heat loss, both of which reduce operating cost, it is desirable to reduce the hot water temperature to the point where the control valve will be opened a high percentage of the time. A fringe benefit is that valve cycling and supply air temperature variance will be reduced.

HOT WATER TEMPERATURE RESET

- Coil surface area usually dictated by the cooling loads
  - Low temperatures
  - Low water rise
- When coil is used for heating, coil has excess capacity
  - Excessive cycling on heating duty
  - Supply air temperature variance
- Use lower hot water temperature and reset, based on outside air temperature
  - Lower temp water enhances boiler efficiency
  - Lower temp water reduces piping heat loss
  - Valve stays open longer
  - Less swing in supply temperature during heating

MANUAL ON-OFF FAN
(Poor Control)

The least expensive way to control the room is to simply allow the water to flow through the coil freely ("wildwater") and to rely on the occupant to manually turn the fan on or off. As the below shows, this results in the widest fluctuations in room dry bulb temperature and relative humidity, and is the poorest way to provide control. The unit is either at 100% capacity or zero capacity, and relies on the occupant to act as the room thermostat. This is manual, not automatic, temperature control.

During the cooling season, with the fan in the off position, there is no humidity mitigation. Also, since the chilled water is running through the unit, the air adjacent to the cooling coil will become refrigerated to the point where it is practically at the temperature of the entering chilled water; which frequently around 45 degrees F. This cold air falls to the bottom of the unit where it is contained by filters or other parts of the unit casing. If this condition exists for some time, materials within the unit will also be cooled to these relatively low temperatures. Since these temperatures will almost always be below the dewpoint of either the room air or the outside air, condensation will most certainly form. In cases where there is a fresh air connection to a unit, the vapor pressure differential between the air in the unit and the outdoor air will force moisture to travel continuously from the outside to the inside and thereby allow condensation on all of these surfaces. Even though the units are insulated and contain drain pans, it is certainly objectionable to allow condensation to form on motor windings and housings, fan wheels and housings, filters, insulation surfaces and especially the external cabinetry of the room fan coil or unit ventilator. Even in cases where there is no fresh air connection, there is a possibility of the formation of condensation when the fan is first started again and the warm room air is drawn in over these cold surfaces.

Condensation in wrong areas can lead to water spotting, mold and mildew. In vertical, floor-mounted units, this condensation will fall downward inside the unit and may be unnoticed from the exterior. However, condensation may form on the exterior of the cabinet. In horizontal units where the grille surfaces are in a vertical plane, it is possible for droplets of condensation to form on the supply grille blades when the fan is in the off position, and in some instances, fall downward from the grille surfaces into the occupied space. Therefore, it is recommended that, at least during the cooling season, the fans be kept in operation whenever the chilled water is flowing through the units. A normally open water solenoid valve may be activated in the fan 'off" position to avoid this problem.

MANUAL ON-OFF FAN
(Poor Control)

- Constant water flow
- Occupant is thermostat
- Zero humidity mitigation w/fan off
- Entering chilled water temp. 45F (1)
- Coil surface temp. F (2)
- Room Dry Bulb - F
  - Fan "ON" (3)
  - Fan "OFF" (4)
- Room Relative Humidity
  - Fan "ON" (5)
  - Fan "OFF" (6)
- Internal & external condensation problems (spotting, mold, mildew)

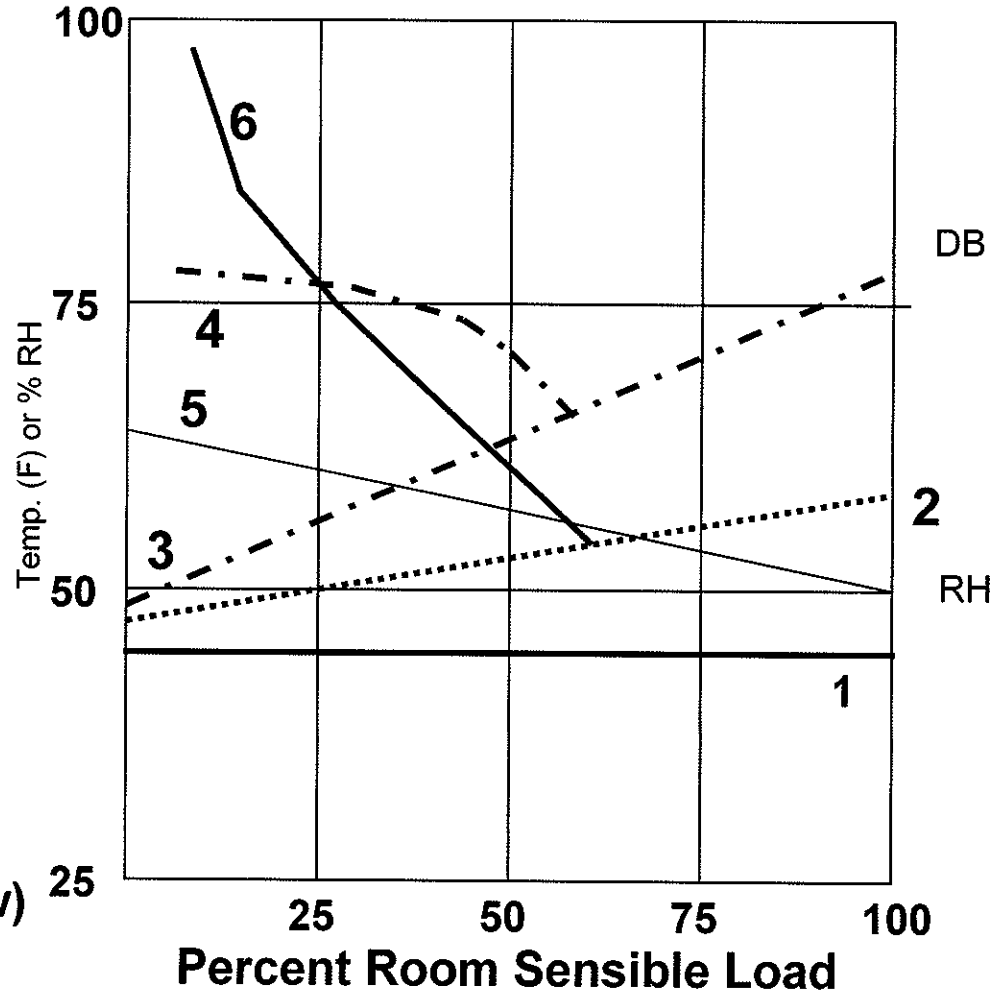

MANUAL 3-SPEED FAN
(Better Than ON-OFF Fan)

An improvement to the manual on-off method of control is allowing the occupant to manually select between multiple fan speeds. A three-speed example is shown. This is an inexpensive control system and again relies on the occupant to act as the room thermostat.

Swings in both room dry bulb temperature and relative humidity result. However, the swings are less severe than what occurs without multiple speeds since the choice of fan speed can bring the terminal capacity closer to actual room loads.

As room load reduces and the fan is switched to lower speeds, the upward rebound in space temperature grows with each step slower because each fan speed step represents a larger percent of capacity relative to the diminishing load.

The internal unit condensation problems encountered with manual on-off control also exist with this scheme when the fan is shut off, although they are reduced greatly because the fan will tend to be in operation for longer periods of time. To avoid the problem entirely a normally open water supply solenoid may be activated (closed valve) when the off setting is selected.

Multi-speed fan control is the best humidity mitigation control strategy that can be attained economically. Automatic 3-speed control is better but more costly. Modulated fan speed is best, but prohibitively expensive because it requires a special fan motor with integrated electronic controls.

MANUAL 3-SPEED FAN
(Better Than ON-OFF Fan)

- Constant water flow
- Fan speed - manual
- Occupant is thermostat
- Entering chilled water temp. 45F (1)
- Coil surface temp. F (2)
- Less swing in room dry Bulb - F than fan on-off (3)
- Less swing in room relative humidity than fan on-off (4)
- Internal condensation problems reduced
- Best humidity mitigation at low cost
- Auto 3-speed fan is better for humidity mitigation

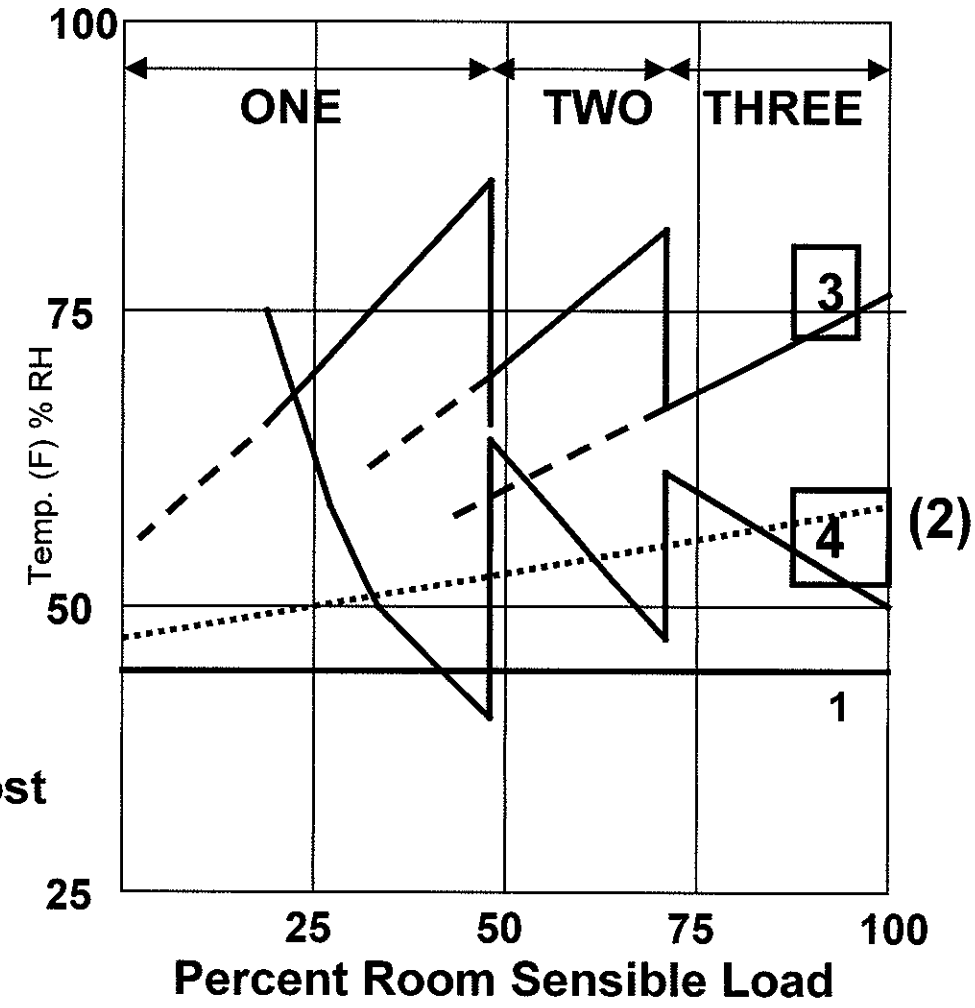

AUTOMATIC ON-OFF FAN
(Best Humidity Mitigation)

This is a simple automatic control scheme which maintains space dry bulb. Humidity is mitigated pretty well near peak load but deteriorates as zone sensible load diminishes. The lower the zone sensible load, the longer the fan remains off, allowing space humidity to build. In addition, condensation on components occurs during the fan off cycle, as described previously. One manufacturer's price page urges purchasers to avoid the use of this strategy in high humidity applications.

When this type of control system is used, it is usually necessary to use a wall mounted thermostat rather than one with its remote bulb mounted inside of the unit in the return air stream. This is true mainly because, during the cooling season when chilled water is flowing through the coil and the fan is off, the cold air falls from the coil over the bulb in the return air stream and thereby prevents this bulb from sensing the actual room temperature. This, then, prevents the thermostat from ever starting the fan even though the room temperature might be considerably above the desired control level.

When the thermostat is wall mounted, it senses the room temperature regardless of the air temperature within the unit and starts and stops the fan in accordance with the room demands. When comparing control systems, however, it should be realized that the wall mounted-thermostat is more costly than an internally-mounted thermostat with remote bulb.

It must also be realized that in a cooling and heating application, the use of a single thermostat requires an additional device to change over it from cooling to heating mode; in other words, to make it operate on a drop rather than a rise in space temperature. The cost of this summer-winter switching function must also be included in any economic consideration.

All of the aforementioned options are summarized in a listing of manufacturer's standard factory options. Examples of these are shown below.

Usually any pneumatic type controls are field provided and not available from the factory. In this module we will deal only with standard available factory packages.

AUTOMATIC ON-OFF FAN
(Best Humidity Control)

- Constant water flow
- Fan cycles "ON-OFF"
- Entering chilled water temp. 45F (1)
- Average coil surface temp. F (2)
- Room Dry Bulb Range - F (3)
- Average room Relative Humidity % (4)
- Wall mounted thermostat recommended
  - Falling cool air on internal thermostat bulb (fan off)

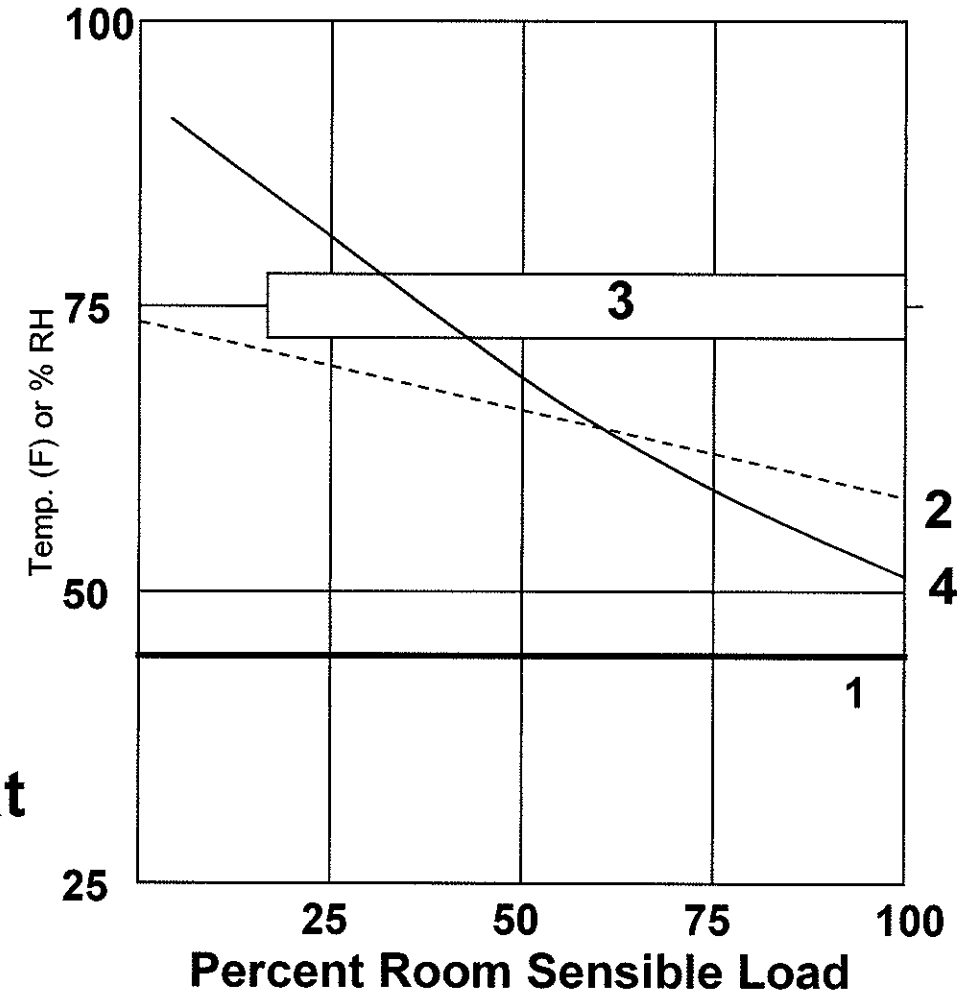

THERMOSTAT CONTROL PACKAGES

PIPING SYSTEM	CONTROL SYSTEM	DESCRIPTION	THERMOSTAT ORDER CODE	SUPPLY AQUASTAT SENSOR	VALVE	UNIT FAN SWITCH	NOTES
4-PIPE	Two position electric valve. Cool and heat valves	Thermostat cycles valve open or closed. 2 F after valve closes, thermostat cycles heating coil valve open. Mode set automatically by thermostat.	Wall (T-9) Unit (T-10) sequenced Heat/Cool switch	None	Motorized 2-way or 3-way no bypass needed. Two Valves required	3 - Speed Switch in Thermostat	Valve packages with bell ends for soldering to coil
		Thermostat cycles valve open or closed. Manual switch from heat to cool.	Wall (T-11) Unit (T-12) subbase with manual Heat/Cool switch	None			

- **Available control system options - Installed at the factory.**
- **Select thermostat package from this table**
  - **T-1 through T-12**

THERMOSTAT CONTROL PACKAGES

PIPING SYSTEM	CONTROL SYSTEM	DESCRIPTION	THERMOSTAT ORDER CODE	SUPPLY AQUASTAT SENSOR	VALVE	UNIT FAN SWITCH	NOTES
2-PIPE HEAT & COOL CHANGE-OVER	FAN Control	Manualy Cycled.	None	None	None	3 - Speed Switch	Not recommended for high humidity
	Use wall mounted thermostat	Thermostat cycles fan on-off with manual switch setting. Manual selection of heat or cool.	**Special Order**	None	None	3 - Speed Switch in Thermostat	
		Thermostat cycles fan on-off with manual switch setting. Mode set automatically by changeover sensor	**Special Order**	Yes	None	3 - Speed Switch in Thermostat	
		Thermostat cycles Hi to Lo on Cooling and Lo to Off on Heating. Mode set automatically by changeover sensor.	**Special Order**	Yes	None	No	Best cycle control for high humidity applications
	Two position motorized electric valves	Thermostat cycles valve open or closed Manualy switch from heat to cool heat to cool	Wall (T-1) Unit (T-2) Heat/Cool Switch	None	Motorized 2-way or 3-way	3 - Speed Switch in Thermostat	Valve packages with bell ends for soldering to coil
		Thermostat cycles valve open or closed Automatic switch heat to cool	Wall (T-3) Unit (T-4) Heat/Cool Switch	Yes			Bypass bleed line neded for 2-way valves with auto-changeover
ELECTRIC HEATER	Two position electric valve with auxiliary heater (2-Pipe)	Thermostat cycles valve open or closed. 2 F after valve closes, thermostat activates electric heater. Mode set automatically by changeover sensor.	Wall (T-5) Unit (T-6) sequenced Heat/Cool Switch	Yes Two Required	Motorized 2-way or 3-way	3 - Speed Switch in Thermostat	Valve packages with bell ends for soldering to coil
		Thermostat cycles valve open or closed. Manual switch from heat to cool.	Wall T-7) Unit (T-8) Heat/Cool Switch	None None			Bypass bleed line neded for 2-way valves with auto-changeover

FAN COIL VALVE DEFINITIONS

It is necessary to understand some definitions when specifying fan coil or unit ventilator terminal valve packages. The following are specific to Carrier's fan coils. Check your manufacturer's price pages.

UNIT HAND:
When facing a unit with the supply air blowing in your face, your right and left hands match the unit right and left hand connections. LH means left hand, and RH means right hand. This method for determining right and left hand is just the opposite of that used to make that determination for central station air handling unit coils.

SAME END CONNECTIONS:
For 2-pipe or 4-pipe systems, all piping connections will be on the same end (LH or RH) of the unit. Controls (power supply to fan switch, etc.) and electrical connections will be on the end opposite the piping connections.

OPPOSITE END CONNECTIONS (4-PIPE ONLY):
For a 4-pipe system, the hot water and electrical connections will be on the end of the unit opposite the end with the chilled water and condensate drain connections.

4-PIPE VALVE PACKAGE TYPES:
The type of hot water valve connection package used does not have to be the same as the type of chilled water connection package. These packages will be discussed later.

FAN COIL VALVE DEFINITIONS

- **Unit Hand - Fan Coils**
  - When facing a unit with the supply air blowing in your face, your right and left hands match the unit right and left hand connections
  - Just the opposite of AHU
- **Same End Connections**
  - 2 or 4-pipe
  - All piping on one side
  - Electrical connections on the opposite side
- **Opposite End Connections**
  - For 4-pipe only
  - Hot water and electrical connections are on opposite end of chilled water connections

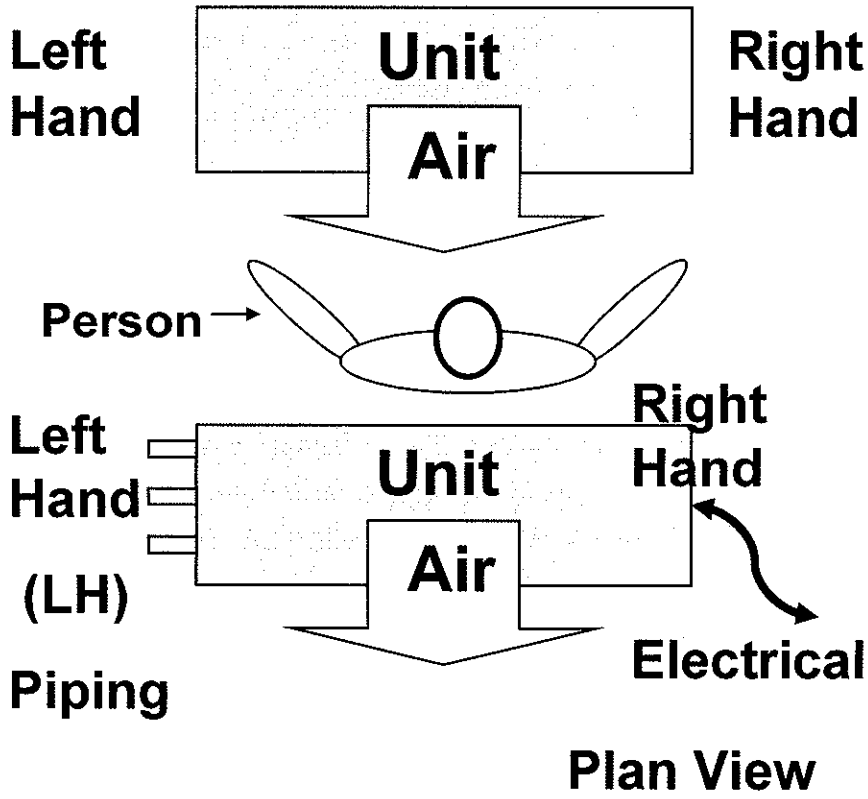

TYPICAL COIL PIPING LAYOUT

The next page shows a typical piping arrangement for a room fan coil unit or a unit ventilator. The supply, return, and condensate lines are all copper tubing, and all connections are soldered (except for the unions).

Unions are provided to facilitate coil or terminal replacement. For servicing the coil or control valve, two service valves are required - (1) in the supply line and (1) in the return line. The supply line valve is a hand turned gate or ball valve. The return line valve has to serve two functions:

1- Service shut-off
2- Balance the circuit.

The return line will be provided with a ball valve or a circuit setter (usually a plugcock), with the circuit setter performing better than the ball valve. As with the circuit setter, the ball valve can also be provided with a memory setting so that it is easy to rebalance the circuit after it has been closed.

The control valve shown is a motorized (2 position) 2-way valve. A motorized 3-way would replace it if chosen. Both the 2-way and 3-way valves would be normally closed to the coil, and both valves would be driven by the motor to one of two positions (closed or open to the coil). Modulating 2-way or 3-way valves are typically not available from the factory for fan coil units and would have to be field supplied, because they are too expensive.

The service and balance valves are sized based on the size of the copper supply and return lines. These lines will be either 1/2" or 3/4" copper.

In order to comply with national standards for drain plumbing, the condensate line will be at least 3/4" o.d. through 3 tons and 1" o.d. through 20 tons. It is usually made of copper and pitched not less than 1/4" per foot to facilitate draining the coil condensate.

The control valve will also be sized based on the supply line size and will be either 1/2" or 3/4". Control valves are normally sized based on a flow coefficient C_v, but the flow rates involved with fan coil units offer few choices. Therefore, a rule of thumb is to size the valve based on the line size when controlling a fan coil terminal. This will not be true when considering an air handler control valve.

TYPICAL FAN COIL PIPING LAYOUT (Cooling Shown - Duplicate For Heating)

- Supply and return lines are 1/2" or 3/4" copper
- Motorized control valve is (on-off) [2 or 3 way]
- Service of coil: (1) gate and (1) ball valve
- Ball or circuit setter (plug cock) also serves as balance
- Optional air vents
- Unions for coil removal
- All connections soldered (except for unions)
- Condensate - 3/4" min. copper and pitched ≥ 1/4" per foot
- 1/4" optional bleed line

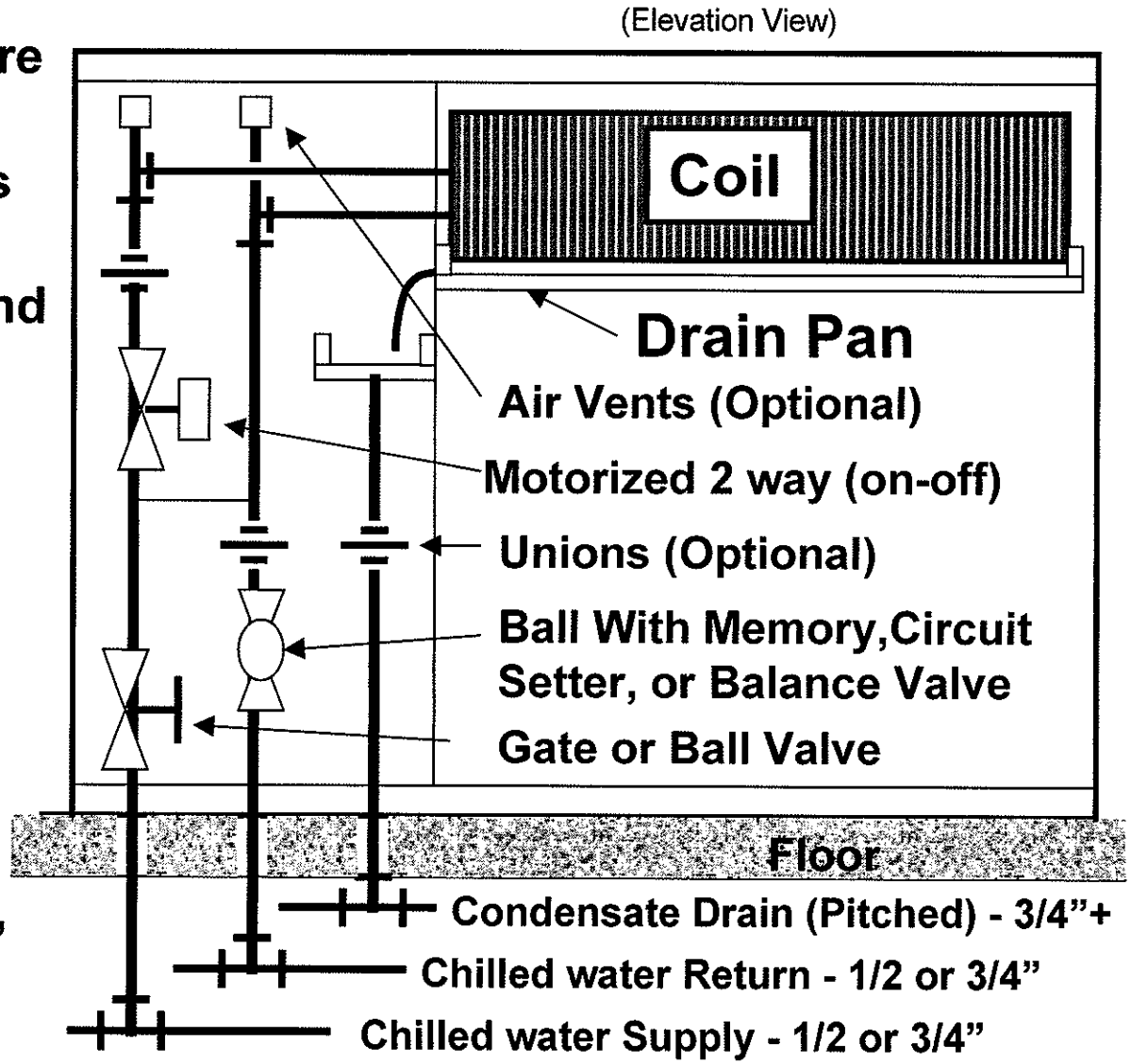

FAN COIL VALVE PACKAGES

(Valves Are Normally Closed to Coil)

Manufacturers of fan coil terminals and unit ventilators provide a variety of valve package options to match up with the type of piping system (2-pipe, 4-pipe); the controlled medium (air or water); valve type (2-way, 3-way, no valves); valve action (two-position, snap-acting, 2-position motorized, modulated) balancing and service valve options; etc.

For the purpose of this module, we will consider (4) such valve packages for simplicity sake. The four packages (A, B, C & D) will follow with an explanation of what the manufacturer provides and its function. Select from these packages for your design project.

For all packages, check job specifications for system pressure, pressure drop limits, and flow rate prior to selecting valve package components or valve package size (1/2", 3/4", etc.)

PACKAGE A: Two-Way Motorized Control valve
3-speed fan switch in thermostat

The 2-way motorized valve motor drives the valve open and a spring return valve returns the valve to its normally closed position (no water flow with the unit OFF).

Supply connections at the coil will be swage fit for field braze (standard) or union (option). Return connection at coil will be factory brazed if only an isolation valve is located in the line.

Addition of any other component will require swage fit for field braze or optional union connection.

APPLICATION:
2-Pipe Hydronic Heating only
2-Pipe Hydronic Cooling Only
2-Pipe Hydronic Cooling with Total Electric Heat
4-Pipe Hydronic Cooling and Heating (Manual Changeover Controls on Unit)

2-Pipe System requires one valve package
4-Pipe System requires two valve packages

NOTE:
This package assumes manual changeover of system from heat to cool.

PACKAGE B: No Motorized Control Valve
3-speed fan switch in thermostat

When only isolation valves are specified, they will be brazed to the coil stub-outs.

APPLICATION:
2-Pipe - Hydronic Heating only
2-Pipe Hydronic Cooling Only

NOTES:
1- Continuous water flow, chilled or hot water.
2- Not recommended for high humidity applications.
3- Use a wall mounted thermostat.
4- Addition of any other component will require swage fit for field braze or optional union connection.

FAN COIL VALVE PACKAGES

(Valves Are Normally Closed to Coil)

- **We will use four of the many factory valve packages for this module:**

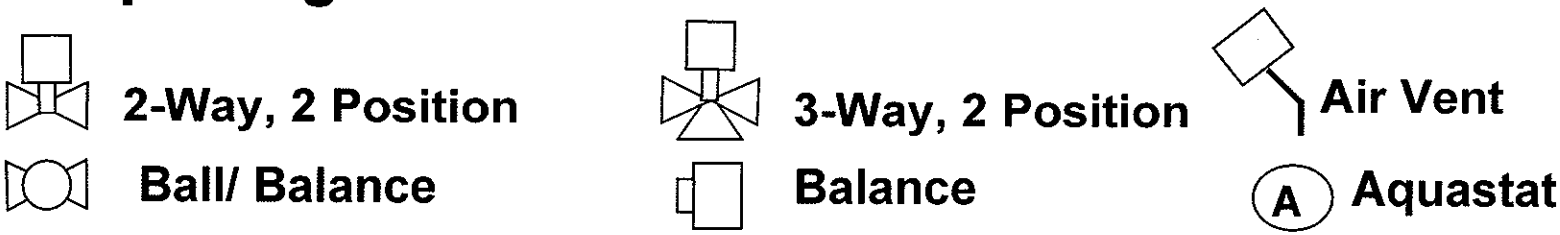

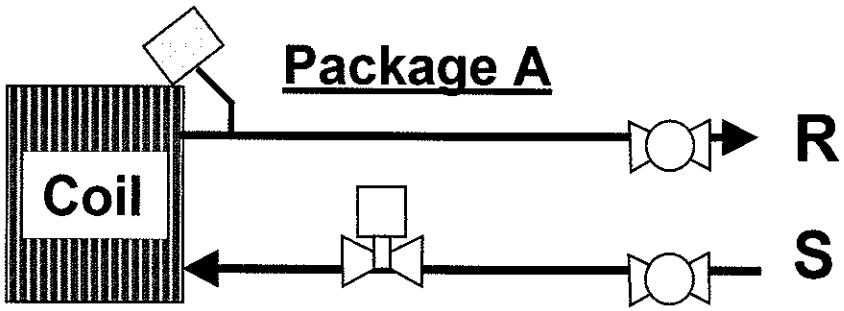

2-way, motorized two position - drives valve open with spring return to close
3-speed fan switch in thermostat
2-pipe (manual changeover)
4-pipe

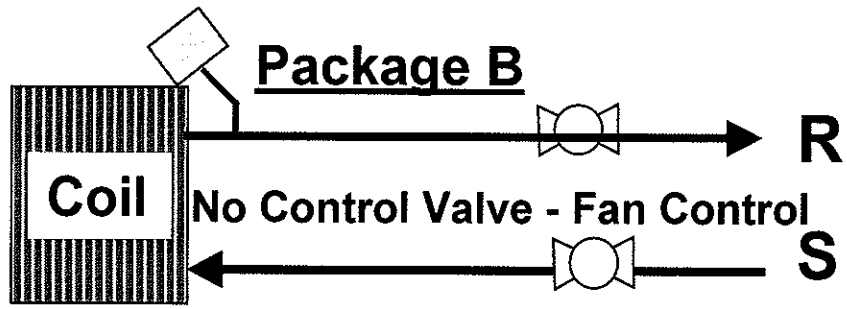

Fan control - no valves
2-pipe cool or
2-pipe heat
Use wall mount thermostat with
3-speed fan switch in it

FAN COIL VALVE PACKAGES

(Valves Are Normally Closed to Coil)

PACKAGE C: Two-Way Motorized Control Valve with Aquastat Bleed Bypass Line 3-speed fan switch in thermostat

The 2-way motorized valve motor drives the valve open and a spring return valve returns the valve to its normally closed position (no water flow with the unit OFF). Equipped with a manual override lever.

The aquastat bleed bypass line (1/4") continually bleeds a small amount of water from supply to return. The auqastat is clipped to the supply line upstream of the bleed line. When the valve is closed, the bleed allows the aquastat to sense system water temperature and prevent cooling operation if hot water is being supplied, or vice versa. An additional aquastat is required to lock out the optional electric heat when hot water is being supplied to the unit.

Supply and return connections at the coil will be swage fit for field braze (standard) or union (option).

APPLICATIONS:
2-Pipe Hydronic Cooling and Heating
2-Pipe Hydronic Cooling and Heating with Auxiliary Terminal Electric Heat

2-Pipe System requires only one valve package.

NOTES: Additional auqastat required when auxiliary electric heat specified.

PACKAGE D: Three-Way Motorized Control Valve with Aquastat

The 3-way motorized two position valve. Motor drives the valve open and closes the bypass or drives the valve to its normally closed position (no water flow to the coil with the unit OFF). Equipped with a manual override lever.

The aquastat is required for a 2-pipe system with automatic changeover and/or auxiliary electric heat. The aquastat clips to the supply line upstream of the 3-way valve as shown. The aquastat senses system water temperature and prevents cooling operation if hot water is being supplied, or vice versa.

A bypass balancing valve may be specified in the bypass line to permit equal balancing of bypass and coil flow. Supply and return connections at the coil will be swage fit for filed braze (standard) or union (option).

APPLICATION:
2-Pipe Hydronic Heating only
2-Pipe Hydronic Cooling Only
2-Pipe Hydronic Cooling with Total Electric Heat
2-Pipe Hydronic Cooling and Heating
2-Pipe Hydronic Cooling and Heating with Aux. Elec Heat
4-Pipe Hydronic Cooling and Heating

2-Pipe System requires one valve package
4-Pipe System requires two valve packages

FAN COIL VALVE PACKAGES

(Valves Are Normally Closed to Coil)

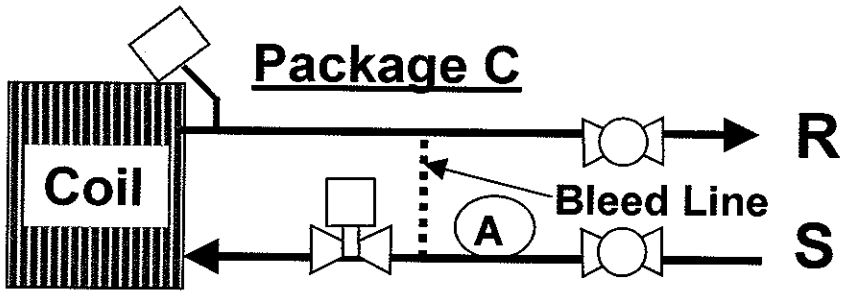

- 2-Way motorized two position: motor drives valve open to coil, spring returns to closed
- 3-speed fan switch in thermostat
- For 2-pipe cool/heat
- Bleed line for aquastat. Aquastat clips on supply line and prevents cooling with hot water & vice versa

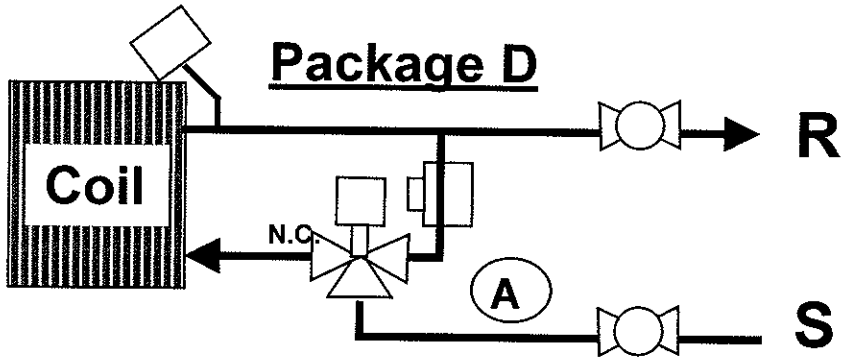

- 3-Way motorized two position: motor drives valve open to coil, spring returns to closed
- 3-speed fan switch in thermostat
- For 2-pipe or 4-pipe cool or heat
- Aquastat clips on supply line and prevents cooling with hot water & vice versa for 2-pipe system

SELECTING FAN COIL CONTROL VALVES

Selecting control valves for room fan coil units is generally very simple. The manufacturer typically uses motorized two-position control valves - not modulating control valves. Whether the valve is 2-way or 3-way, the standard action is two-position.

Selecting the size of control valves for room fan coils is very simple when the valves are not selected for a specific pressure drop. In those cases, the manufacturer pre-engineers the valve size when a standard factory package is chosen. The control valve is sized to match the coil connections:

1/2 inch for 5/8" copper tubing
3/4 inch for 7/8" copper tubing

In designing these valve packages, the manufacturer's primary concern is whether the valve has enough close-off pressure to stop the water flow to the coil (two-way valve); that the valve rated pressure can withstand the pressure in the system; and that the valve has a reasonable water flow pressure drop wide open. A reasonable pressure drop would be one that is equal to one to two times the coil pressure drop. If any of the above requirements are not met by the factory supplied packages, the designer can have the valves field-provided.

The pressure drop can be converted into a valve flow coefficient, called C_v. C_v is defined as the flow rate in GPM @ 60 F that when passing through a wide open valve produces a one pound pressure drop. The higher the pressure drop and, consequently, the authority of a valve, the lower the C_v.

Expressed in an equation:

$C_V = [GPM / (0.67 \times \sqrt{P})]$ Where

GPM = Gallons Per minute
P = Pressure Drop in Ft. Water Gage

When C_V and flow is known, waterside pressure drop can be found as follows:

$P_w = (GPM/ C_V)^2 \times 2.31$

Two way valves are typically rated for 300 psi working pressure; 200 degrees F working temperature; and a close-off pressure of 25 psi. Three way valves are typically rated for 300 psi working pressure; 200 degrees F working temperature; and a close-off pressure of 10 psi - lower since the valve is shifting flow from one port to another and not shutting off flow.

Things that relieve the designer from selecting control valves for a specific pressure drop include: reverse return piping; equal waterside pressure drop by terminals on the same piping run; and a balancing cock (circuit setter) at each terminal unit. When these flow-balancing influences are not present, it may be necessary to select the control valve for a specific pressure drop in order to get the required GPM to each terminal at peak load. The standard valve package usually will not work in such cases. Without the required GPM, indoor design conditions will not be met and the system will either fail to be commissioned successfully or else costly redesign and repair may be required in warranty. The ball shut off valve will function as a balancing valve for small pressure drop differences between circuits, but will not rectify major differences.

SELECTING FAN COIL CONTROL VALVES

- Fan coil units use two-position (not modulating) control valves in standard control packages (2-way or 3-way)
- Valves are sized to match coil connection size by the manufacturer:
  - 1/2 inch for 5/8 inch copper tubing
  - 3/4 inch for 7/8 inch copper tubing
- Only question: What is the valve pressure drop?
- C_V = Valve Flow Coefficient (GPM @ 1 PSI w.g. drop)
- $P = (GPM / (C_V)^2 \times 2.31$ Where P = Valve Pressure drop in ft. W.G.
- Standard fan coil valves have the following typical C_V characteristics:

FAN COIL VALVES - STANDARD		
MOTORIZED VALVE TYPE	VALVE C_V	
	1/2 INCH	3/4 INCH
2-WAY	2.3	2.3
3-WAY	5.0	5.0

FAN COIL VALVE SIZING EXAMPLE

Assuming that the water distribution system feeding the fan coils in the high-rise hotel has flow-balancing influences (reverse return piping; similar waterslide pressure drop for terminals on the same piping run; and a balancing cock (circuit setter) at each terminal unit), a sample fan coil valve selection will be made from the standard factory packages offered.

From the fan coil schedule let's consider the NW top floor hotel room - room 1901. From the fan coil selection the cooling coil needs 2.7 gpm and has a pressure drop of 8.1 ft wg. Let's further assume that we have chosen a motorized two-way, two-position valve for control purposes - the standard factory package offering.

The question becomes, what size valve to use. We have two choices, a 1/2 inch or a 3/4 inch valve. As shown on the previous page, the 1/2 and 3/4 inch valves both have a CV of 2.3 and the same pressure drop characteristics. Therefore, we can use either valve - pressure drop is not part of the consideration.

We select the 1/2 inch valve because it would match the coil connection size - making installation simple. In fact, the factory would automatically provide the 1/2 inch valve unless directed otherwise. All coil connections are 1/2 inch size.

The only thing remaining is to determine the pressure drop the valve will produce when delivering 2.7 gpm.

Valve Drop = $(GPM / (C_V)^2 \times 2.31$

= $(2.7 / 2.3)^2 \times 2.31\} = 3.2$ ft w.g.

If we did not like the 3.2 ft pressure drop, we would have to consider a field-furnished valve.

This pressure drop is somewhat low considering the rules of thumb for fan coil valve selection: 1 - 2 time coil Δ P or roughly 10 ft. w.g. However, since this is a 2-position valve instead of a modulated valve, the low pressure drop should be acceptable if flow balancing influences are present in the piping system. A higher fan coil valve pressure drop will make differences in piping circuit pressure drops less noticeable and the water system easier to balance.

FAN COIL VALVE SIZING EXAMPLE

ROOM FAN COIL SCHEDULE															
NAME: Marvin Patnode				NOTE: 45 F CHILLED WATER				DATE: Mar 16, 2000							
DESIGN TEAM NUMBER:				120 F HOT WATER				JOB NAME: Casino Hotel Example (NW Top Room)							
				COOLING				HEATING							
				CAPACITY				COIL		CAPACITY					
TAG NAME	UNIT MODEL	NO. OF UNITS	UNIT SIZE-ROWS	TOT BTUH	SEN BTUH	GPM	P.D.	TYPE	ROWS	BTUH	GPM	P.D.	FAN SPEED	FAN MOTOR VOLTAGE
1901NW TOP	42SJ	1	06-3	14700	9800	2.7	8.1	HW	3	16100	1.8	2.5	Med	277/1/60

- **Cooling coil needs 2.7 GPM @ 8.1 ft wg drop**
- **Assume the use of a 2-way motorized 2-position valve**
- **What size valve should be used: [1/2 or 3/4 inch]**
  - **Both 1/2 and 3/4 inch valves have a CV of 2.3**
  - **They both produce the same pressure drop for a given flow.**
  - **We are free to choose either valve from a pressure drop perspective**
- **Select 1/2 inch valve to match coil connection size.**
  - Valve drop = $(GPM / C_V)^2 \times 2.31$ ← PSI to ft.
    = **$(2.7 / 2.3)^2 \times 2.31 = 3.2$ ft. w.g.**
  - **Use field furnished valve if 3.2 ft wg is not acceptable**
- **Higher valve loss makes system balancing easier.**

= lower valve loss → system balancing difficult

FAN COIL CONTROL SCHEDULE FORM

This form is provided to help you in your decision process as you choose the design of your fan coil system. Locate the form in the design project at the end of this book.

The Control System consists of four levels:

1- The Piping System Type:

a: 2-Pipe
b: 2-Pipe with auxiliary terminal electric heat
c: 4-Pipe

2- Thermostat Package Selection:

The choices range from T1 through T12 (see "Thermostat Control Packages" shown previously), and also choose from three basic strategies:

a: Fan control - constant water flow
b: 2-Pipe: 2-way or 3-way waterside control
* Manual changeover
* Automatic changeover
c: 4-Pipe: 2-way or 3-way waterside control

3- Control Valve Type:

a: 2-way two position valve
b: 3-way two position valve

4- Standard Valve Control Package (Service & Control)

a: Package "A"
b: Package "B"
c: Package "C"
d: Package "D"

FAN COIL CONTROL SCHEDULE FORM

FAN COIL CONTROL SCHEDULE FORM		
PIPING SYSTEM TYPE:	**SELECTION**	**In the space provided, defend your choice in writing:**
CHOICES: 2-Pipe 2-Pipe With Aux. Electric Heat In The Terminal Units 4-Pipe		**Partial Form Shown Here**
THERMOSTAT PACKAGE:	**SELECTION**	**In the space provided, defend your choice in writing:**
CHOICES: T1 through T12		

- **Locate the Fan Coil Control Schedule Form**
- **Note the four areas to be completed**
  - **Piping system type (you completed this earlier)**
  - **Thermostat package**
  - **Control valve type**
  - **Standard control valve package (service & control valves)**
- **This form helps you to document your choices**

PROJECT: TERMINAL CONTROL

- Locate Fan Coil Control Schedule Form
  - Find in the Design Project material in the back of this book
- Gather in your design teams
- Decide on the type of controls you will use for your fan coil terminal system
  - Fan control or
  - 2-pipe control or
  - 4-pipe control
- Then select the:
  - Thermostat package
  - Valve control package
  - Valve size will match the unit coil connection size: 1/2 inch for stack units

  (see product literature for others)
- Justify your choices



VALVE SELECTION

- Fan coil control valves are factory sized based on coil connection size:
  - 1/2 inch or 3/4 inch
  - 2-way, 2-position control
  - Or field selected and installed
- Air handling unit control valves must be sized for C_v
  - They are modulating type, not 2-position
- Let's look at the principles behind selecting a modulating control valve
  - Typical coil piping
  - Control valve sizing

TYPICAL AHU PIPING

The page below shows a typical piping arrangement for controlling the chilled water coil in a central station air handling unit.

Piping is run vertically, up toward the ceiling to provide floor clearance, and valves are usually located overhead.

A modulating 3-way mixing valve located in the return line maintains a desired air temperature by automatically proportioning the amount of water flowing through the coil or through the bypass. The coil experiences variable water volume but the coil circuit remains at a relatively constant volume. The coil valve is regulated by a temperature controller.

Gage cocks are provided in both the supply and return lines to the coil. This permits pressure gages to be connected to the coil to determine the coil pressure drop and its flow.

The ball valve is used with the gate valve for coil isolation and service, and the ball valve is also used to balance the flow through the circuit. The ball valve may be replaced by a plug cock, which serves the combined functions of a shut off and balancing valve. A plug cock is more precise, quieter, and can provide better balancing than a ball valve.

Sometimes a plug cock is located in the 3-way valve bypass line to balance the valve pressure drop when in the bypass mode. This causes the coil circuit to have the same pressure drop when the coil receives full flow and no flow. However, when the valve is modulated between the two extremes, the pressure drop through the coil and bypass circuits will vary.

Automatic air vents are located at the highest points in the piping serving the coil to allow air to escape when the piping is being filled with water. The piping connected to the coil contains dirt legs (with caps) to collect any debris that may be circulating in the piping, and to keep it from accumulating in the coil or plugging the seat of the control valve. Pipe extensions with caps are also provided to aid in draining the piping when the coil must be serviced.

Finally, unions are provided around the coil and 3-way valve to aid in removal and service.

The coil supply and return lines are then returned back toward the floor - usually along a wall - to meet the chilled water supply and return main lines.

2-Way Valve Control:

When a 2-way modulating valve is used, it replaces the 3-way valve and is installed in the supply line.

TYPICAL AHU PIPING

- Three-way mixing valve for control
- Ball valve
  - Balance circuit
  - Service circuit
- Gate valve for service
- Gage cocks
  - Connect pressure gages
- Air vents - fill piping

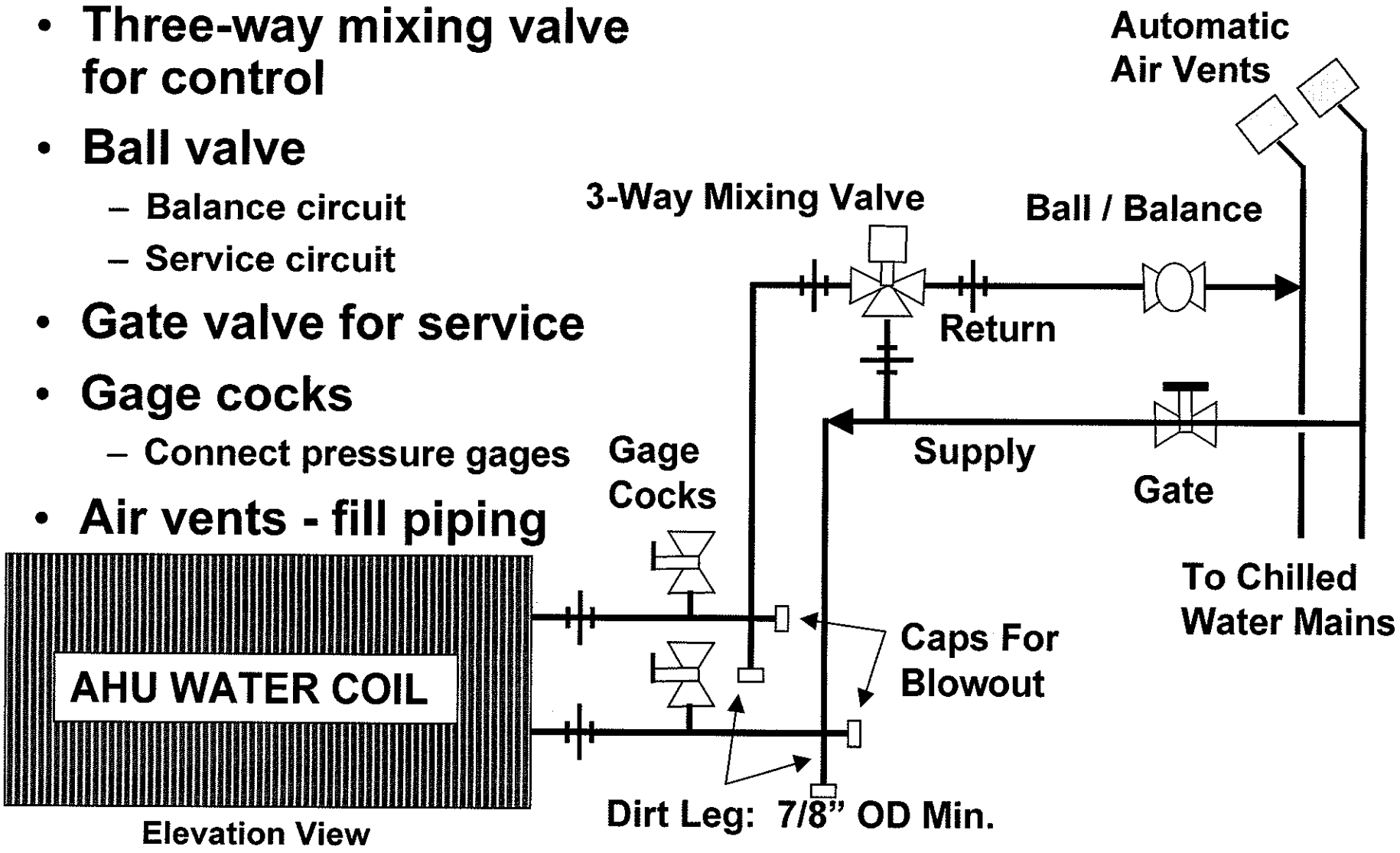

Elevation View

VALVE SELECTION PRINCIPLES

MOTORIZED MODULATING VALVES:

The graph on the lower left shows typical control valve characteristics for three types of **modulating valves** operating at a constant pressure drop:

1- Quick Opening
2- Linear
3- Equal Percentage

The performance of the valve is determined by the shape of the valve plug, also called its disc, and the travel of the plug in the valve seat.

Since water coils provide large capacity increases for relatively small increases in flow, we need a valve that provides small increases in flow for relatively large increases in stem travel. Clearly, the equal percentage valve offers this. A 50% valve stem travel results in only a 12% flow increase. This compensates for the initial capacity "rush" water coils give when water first begins to flow through them.

The 12% flow increase through a water coil results in about a 50% increase in coil capacity.

When a water coil is combined with an equal percentage valve, a 50% valve stem travel results in a 50% increase in coil capacity. The characteristic of the equal percentage valve offsets the tendency of a water coil, and results in a combined linear effect - or nearly so. The graph on the lower right reflects this combination. Even though the graph shown below is for hot water coils, the same need exists, to a lesser extent, for chilled water coils.

Since steam coils give a nearly linear flow/capacity performance, a linear seat/plug valve makes the most sense.

MOTORIZED TWO-POSITION VALVES:

This discussion obviously applies to modulating type valves that must maintain a certain flow in order to control a coil discharge air temperature or room temperature.

When it comes to motorized two-position valves, this discussion does not apply. For two-position valves, the control is being affected by the on-off position of the valve, not by the valve % open versus flow characteristic.

SELECTING THE RIGHT VALVE

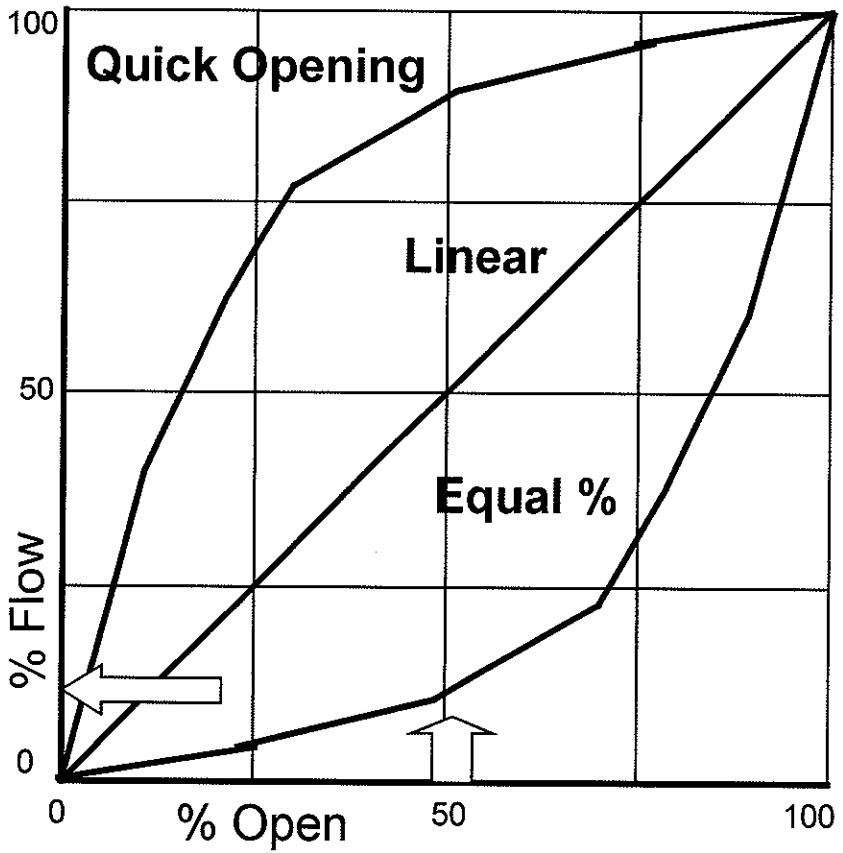

Typical Valve Performance

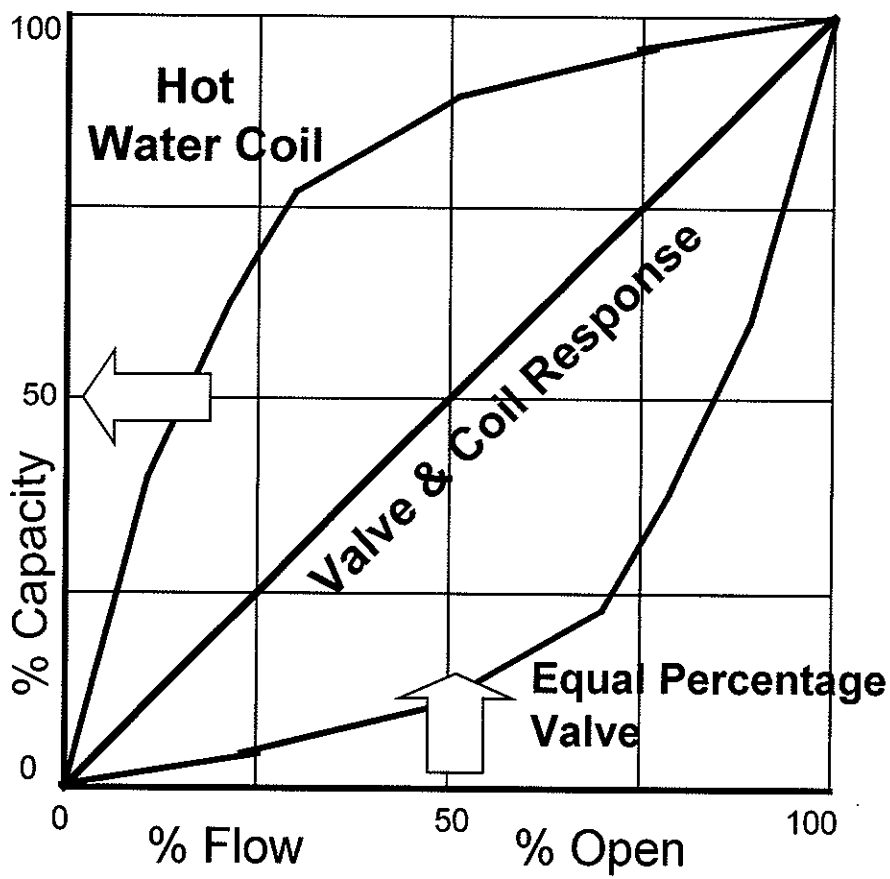

Equal percentage valve & coil gives linear capacity

RANGEABILITY AND AUTHORITY

There are two more factors that influence the ability of a modulating control valve to function properly. They are rangeability and authority.

Rangeability:
A control valve is designed for a maximum flow at a certain pressure drop. If that pressure drop is held constant as the valve throttles, there will be a minimum flow below which the valve can no longer control the flow. The ratio of the maximum flow to the minimum flow at a constant pressure drop across the valve is called rangeability.

Typical rangeability for commercial control valves varies from 15:1 to 50:1. Realistically, 15:1 is pretty good for most commercial jobs.

Assuming you have selected a valve at its maximum flow (150 gpm) for your job, and that its rangeabilioty was 15:1, it would have a minimum flow capability of 10 gpm (150/10 = 15). This represent a minimum flow rate of (10/150) x 100 = 6.7%

A flow rate of 6.7% with a heating coil at a 20F drop is about 35% capacity, and with a chilled water valve it is about 20% flow.

Since valves are typically oversized slightly, it is quite usual to expect a control valve to be able to control capacity from 100% down to about 30% to 40% - depending on the type of coil.

Authority:
The control valve is one of a number of pressure drops in the pumping loop that it is part of, and yet it must control the flow through a coil. The pressure drop of the valve must be a sufficiently large portion of the loop in order to be able to control the flow in the loop.

Authority = (Valve Press. Drop)/(System Press Drop) x 100%

From a design point of view, it is important to select a control valve pressure drop that is from 25% to 50% of the system loop pressure drop. Failure to provide as high an authority as possible will result in the inability of the valve to maintain its equal percentage curve response. The lower the authority, the closer the valve characteristic becomes to a linear seat/plug. And with a linear valve response, the valve-coil combination loses it's linear capacity response to the valve position - making the system more difficult to control. Generally speaking, the bigger the pressure drop through the valve (the lower the Cv) the more authority it has over system control. However, too much pressure drop adds pumping cost and causes noise.

RULE OF THUMB:
The above general principal results in the following rule of thumb when selecting a control valve for a water coil:

1- Keep the coil pressure drop as low as possible
   a) Less than 10 ft. for fan coils
   b) 10 to 20 ft. for central station air handlers
2- Select the control valve for one to two times the coil pressure drop.

3- Select the valve for a pressure drop of at least 25% of the total system loop pressure drop.

CONTROL VALVE RANGEABILITY

- **Valve Rangeability:**
  - **Definition: (max flow / min flow) @ constant pressure drop**
  - **Min flow is lowest controllable flow**
  - **Commercial valve rangeability range: (15:1 to 50:1)**
  - **15:1 is pretty good on most commercial jobs**
- **Rangeability Example:**
  - **Valve designed for 150 gpm with 15:1 rangeability**
  - **Minimum flow = (150 / 15) = 10 gpm** (lower than 10gpm means it loses it's availability to control)
  - **Minimum % flow = (10 / 150) x 100 = 6.7%**
  - **Heating coil @ 6.7% flow results in a min controllable capacity of 35%**
  - **Cooling coil @ 6.7% flow results in a min controllable capacity of 20%**
- **Since valves are typically slightly oversized, it is reasonable to expect a valve to control down to no lower than 30 to 40% capacity - unless a high rangeability valve is chosen**

CONTROL VALVE AUTHORITY

- **Valve Authority:**
  - Definition: (valve press. drop / loop press. drop) x 100%
  - Valve authority must be 25% to 50% of system loop pressure drop
  - The lower the authority, the closer the valve flow characteristic becomes to linear.
  - This defeats the use of a equal percentage valve & results in a more quick opening response of the valve-coil combination

- **Rule of Thumb Control Valve Sizing (Authority)**
  - Size fan coils for a pressure drop of equal to or less than 10 ft. W.G.
  - Size central station AHU coils from 10 to 20 ft. W.G.
  - Size control valve at 1 to 2 times coil pressure drop
  - Select central station AHU valve for ΔP_w at leat 25% total loop ΔP_w

AUTHORITY EXAMPLE

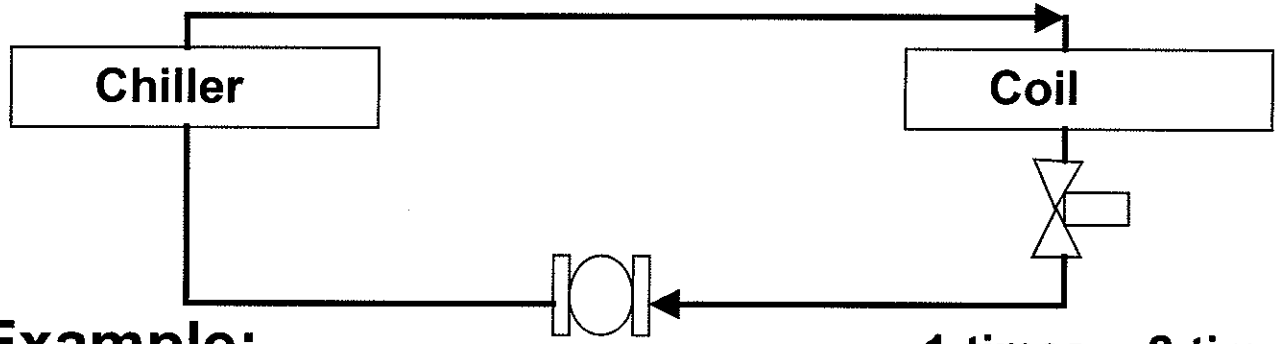

- **Authority Example:**

	1-times	2-times
– Chiller pressure drop	20 ft.	20 ft.
– Coil pressure drop	10 ft.	10 ft.
– Piping and fittings pressure drop	10 ft.	10 ft.
– Control valve pressure drop (1 - 2 times coil)	10 ft	20 ft
– Total loop pressure drop	50 ft	60 ft

- **Valve Authority**
  - @ 10 ft valve drop, (10 / 50) = 20%
  - @ 20 ft valve drop, (20 / 60) = 33%
  - Choose valve @ 20 ft drop (target authority = 25% to 50%)

SIZING CONTROL VALVES - C_V

As we have learned, modulating control valves are sized to produce a 25% to 50% authority in the circuit which they are located. The control valve should be sized for one to two times the pressure drop of the coil it is controlling.

C_V values are published by manufacturers for their valves. The next page contains typical valves and their corresponding C_V values. We will use this table for all modulating control valve sizing exercises in this course. From this table a valve can be specified by it's size followed by the letter at the top of the appropriate C_V column. (Example: 1/2 - A)

Generally speaking, the valve size tends to be one size smaller than the water piping to which it is attached.

SIZING CONTROL VALVES - C_V

- Valves sized to produce "Authority"
  - 25 to 50% of loop pressure drop
  - 1 to 2 times coil pressure drop
- Valve sizing coefficient - C_V
  - $C_V = [GPM / (0.67 \times \sqrt{P})]$ where
    GPM = gallons per minute
    P = pressure drop in ft. water gage
    C_V = GPM at 1 PSI pressure drop

Lower C_V → Higher Authority

- The higher the pressure drop (authority) the lower the C_V
- C_V values are published by the manufacturer
- Valve size usually one size less than line
- With C_V & GPM known, $\Delta P_w = (GPM/ C_V)^2 \times 2.31$
- Use this table as typical for valve sizing in this course:

Modulating AHU Valve Sizes			
VALVE SIZE (IN)	MOTORIZED CONTROL VALVE VALVE C_V		
	TWO-WAY VALVE		
	A	B	C
1/2	0.4	1.3	2.3
3/4	5.0	6.2	8.0
1	9.0	10.0	11.0
1-1/4	12.0	14.0	16.0
1-1/2	19.0	22.0	26.0
2	30.0	35.0	40.0
2-1/2	44.0	50.0	56.0
3	61.0	72.0	85.0
4	90.0	95.0	100.0
SIZE (IN)	THREE-WAY VALVE		
	D	E	F
1/2	2.0	3.0	4.0
3/4	5.0	6.0	8.0
1	9.0	10.0	12.0
1-1/4	13.0	14.0	16.0
1-1/2	20.0	26.0	33.0
2	40.0	46.0	55.0
2-1/2	62.0	68.0	74.0
3	80.0	90.0	101.0
4	110.0	120.0	130.0

Example: Specify As: 1/2 - A

EXAMPLE - C_V SIZING

Example:

We need a two-way modulating valve with a C_V of 26.
We specify a 1 1/2" C valve as the required valve.
A valve sizing example is shown below for a pump with three separate central station air handling unit coil circuits each with a 2-way modulating control valve.
When sizing control valves for central station air handling units, it is a common practice to size the control valve to help balance the circuits. The procedure is as follows:

1- Find the circuit with the greatest pressure drop without the control valve.
2- Size the control valve for 1 to 2 times the coil pressure drop of the greatest pressure drop circuit. When on the borderline, select the next smaller C_V .
3- Add the valve drop to the greatest circuit pressure drop (total circuit drop).
4- Pick another circuit.
5- Subtract the new circuit drop from the greatest circuit total pressure drop.
6- Size the new circuit control valve based on the drop from step (5).
7- Repeat the process for each circuit.

Each circuit is then provided with a balance valve for final circuit trimming since valve coefficients are not available in infinite sizes. Actual valve coefficients will not exactly match the calculated coefficient required for each circuit.

SIZING CONTROL VALVES - C_v

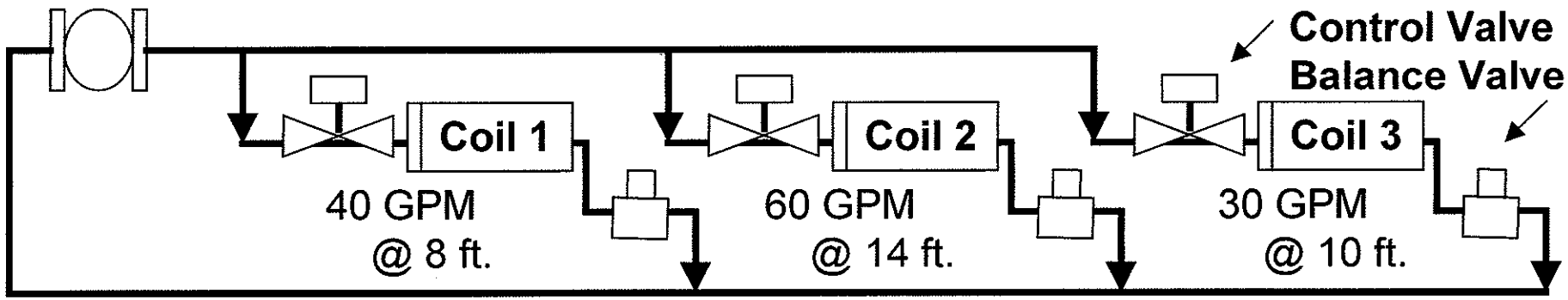

- **Control valves are sized to equalize circuit pressure drop**
- **Circuit 2 has highest drop at 14 ft.**
  - **Select a control valve with a drop of 14 ft. (1 times coil drop is minimum)**
  - **C_v = [60 / (0.67 x √14)] = 23.9 select a 1 1/2-C valve @ 26 c_v PD = 12 ft**
  - **Circuit 2 pressure drop = [12 + 14] = 26 ft.**
- **Circuit 1 needs [26 - 8] = 18 ft valve drop to balance**
  - **C_v = [40 / (0.67 x √18)] = 14 select a 1¼ valve @ 14 c_v PD = 19 ft**
- **Circuit 3 needs [26 - 10] = 16 ft valve drop to balance**
  - **C_v = [30 / (0.67 x √16)] = 11.2 select a 1¼ valve @ 12 (11) c_v PD = 14.4 (17.2) ft**

HIGH-RISE AIR HANDLER VALUES

The first floor of the high rise hotel has two air handlers located above the ceiling - one for the casino and the other for the restaurant. It also has a single ventilation unit located in the penthouse on the roof which serves the 18 hotel floors. All three need to have a control valve selected to control them. Your instructor will illustrate the selection of the control valve for the ventilation unit, and you will be required to select a control valve for the two casino air handlers.

HIGH-RISE HOTEL AIR HANDLERS

- High-Rise Hotel has (3) air handling units
- (1) Ventilation unit in roof penthouse
- (2) Units located in the ceiling of the first floor (casino & restaurant)
- Instructor selects control valve for ventilation unit
- Students select control valve for Casino units

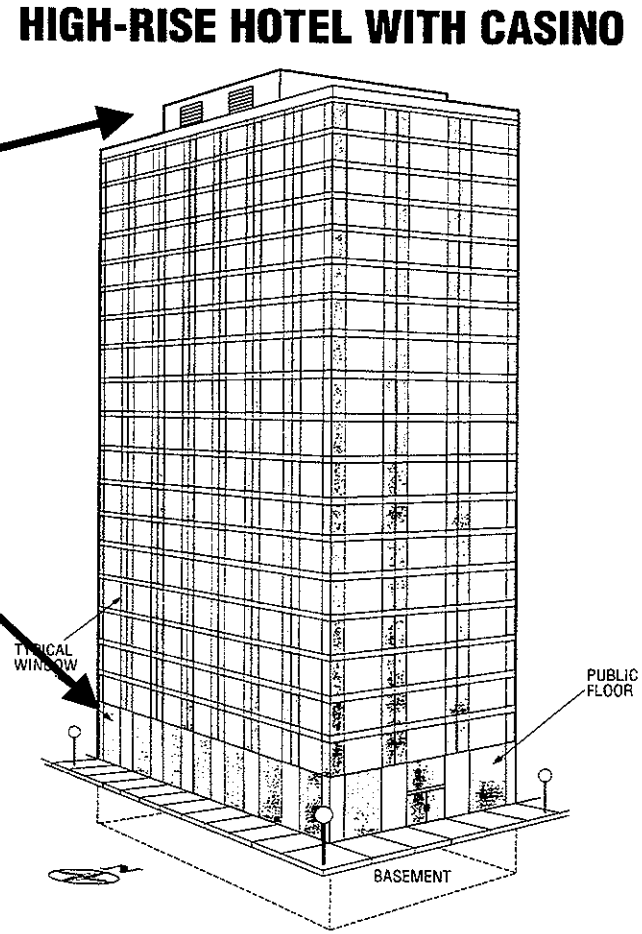

VALVE SELECTION EXAMPLE - VENT UNIT

Let's use the ventilation air handling unit to demonstrate the selection of a modulating chilled water control valve. Further, we will assume we have decided to use a 3-way mixing valve for control purposes. From the air handler selection program the output provides the following information:

1- Chilled Water Flow Rate	177.3 GPM
2- Coil Pressure Drop	13.6 ft wg
3- Required valve C_V	72

The designer has assumed a valve pressure drop equal to the coil pressure drop to keep with the authority rule of thumb. The calculated CV for an "ideal" valve would be 72. A valve equal to or slightly smaller than this value should be chosen.

From the valve selection table, a 2-1/2 inch valve with a C_V of 68 is the closest without going over 72. The final valve selection would be a {2-1/2 - E}, with the "E" indicating a particular 3-way valve.

The valve pressure drop would be:
$= (GPM / CV)^2 \times 2.31$
$= (177.3 / 68)^2 \times 2.31 = 15.7$ ft. w.g.

AHU VALVES			
VALVE	MOTORIZED CONTROL VALVE VALVE C_V		
SIZE	THREE-WAY VALVE		
(IN)	D	E	F
1/2	2.0	3.0	4.0
3/4	5.0	6.0	8.0
1	9.0	10.0	12.0
1-1/4	13.0	14.0	16.0
1-1/2	20.0	26.0	33.0
2	40.0	48.0	55.0
2-1/2	62.0	68.0	74.0
3	80.0	90.0	101.0
4	110.0	120.0	130.0

Example: Specify As: 1/2 - A

EXAMPLE - VENT UNIT

- **From Ventilation Unit selection output:**
  - **Chilled water flow rate** **177.3 GPM**
  - **Coil pressure drop** **13.6 ft wg**
  - **Required valve C_V rating** **72**
- **Select a modulating 3-way mixing valve**
- **Locate valve selection table**
- **Find a C_V of 72**
- **Choose a [2-1/2 - E] valve with a C_V of 68**
- **Valve pressure drop**
  - **$(GPM / C_V)^2 \times 2.31$**
  - **$(177.3 / 68)^2 \times 2.31 = 15.7$ ft. w.g.**

AHU VALVES			
VALVE	MOTORIZED CONTROL VALVE VALVE C_V		
SIZE	THREE-WAY VALVE		
(IN)	D	E	F
1/2	2.0	3.0	4.0
3/4	5.0	6.0	8.0
1	9.0	10.0	12.0
1-1/4	13.0	14.0	16.0
1-1/2	20.0	26.0	33.0
2	40.0	46.0	55.0
2-1/2	62.0	68.0	74.0
3	80.0	90.0	101.0
4	110.0	120.0	130.0

Example: Specify As: 1/2 - A



PROJECT: AHU CONTROL

- Locate AHU valve selection schedule
  - Find in the Design Project material in the back of this book
- Gather in your design teams
- Decide on the type of controls you will use for the two public floor air handling units
  - 2-way modulating
  - 3-way mixing
  - Justify your choice
- Then select the valve
  - Justify your choices



END

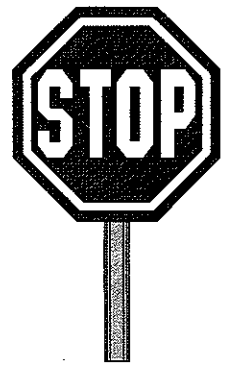

PIPING LAYOUT

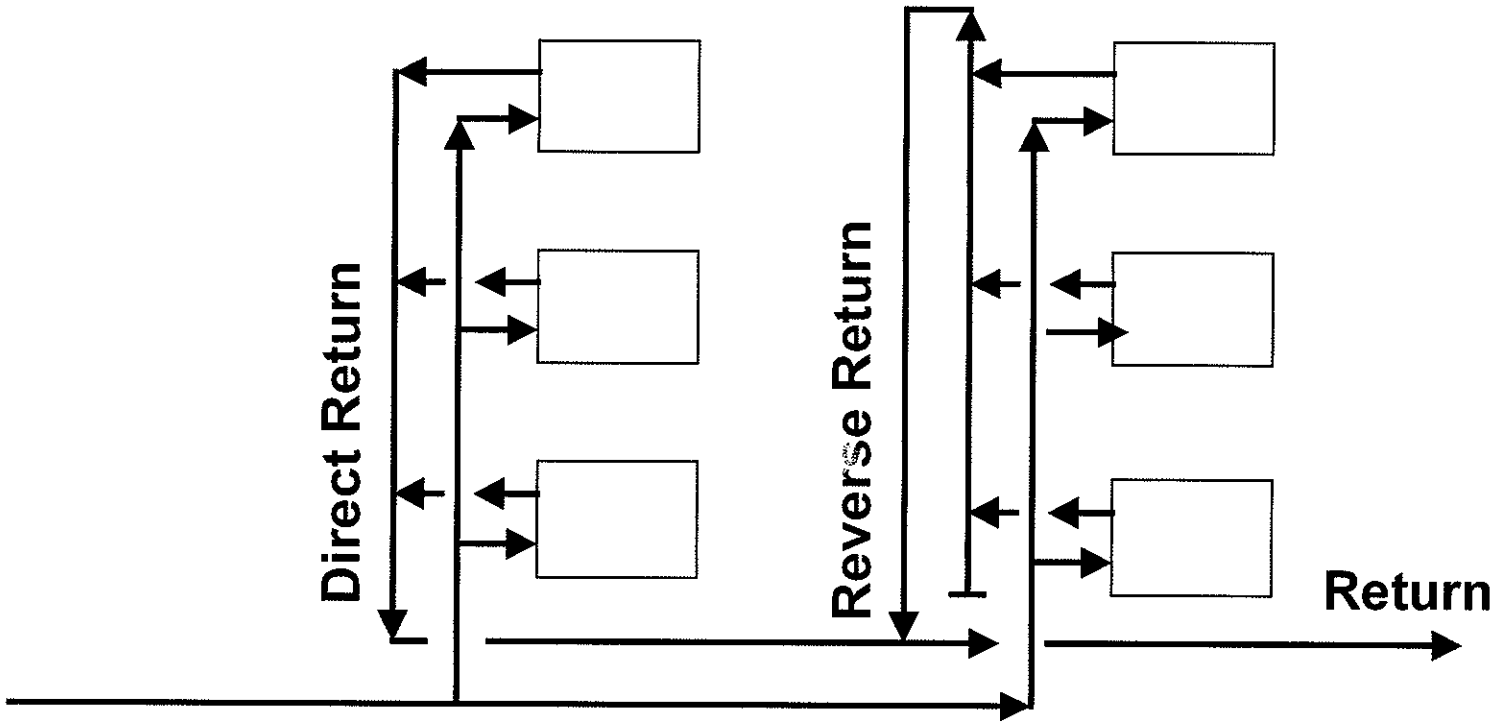

DES700

APPLIED WATER SYSTEM DESIGN

OBJECTIVES

Having selected all the room fan coils and air handling units, and realizing the chiller plant is located in the basement; it is now necessary to layout a piping system that will connect the chiller plant to all the coils in the building (fan coils and air handling unit coils).

At the end of this session you will be able to:

- Select from the four basic stacked fan coil unit models to match with a room layout
- Calculate the GPMs at each floor in the riser piping for a stacked fan coil unit system
- Locate stacked fan coil unit risers on a floor plan
- Locate chiller plant and air handler on a floor plan
- Layout direct or reverse return risers (elevation view)
- Layout direct or reverse return supply and return headers (plan and elevation views)
- Determine the total GPM requirement for the chilled water plant.

This corresponds to the "Make a Pipe Layout" in the design check list for the Room Fan Coil System.

OBJECTIVES

- **Be able to:**
  - Select from the four basic stacked fan coil unit models to match with a room layout
  - Calculate the GPMs at each floor in the riser piping for a stacked fan coil unit system
  - Locate stacked fan coil unit risers on a floor plan
  - Locate chiller plant and air handler on a floor plan
  - Layout direct or reverse return risers (elevation view)
  - Layout direct or reverse return supply and return headers (plan and elevation views)
  - Arrive at total GPM needed by the chilled water plant



DESIGN CHECKLIST STEPS

- Select control zones
- Calculate peak zone cooling and heating loads
- Select room fan coil terminals
- Select type of terminal controls
- *Make piping layout*
- Make condensate drain layout
- Select refrigeration machine
- Select auxiliary equipment

PIPING LAYOUT PRINCIPALS

When laying out a Piping System, there are three essential elements - the same three elements you have used previously in doing a duct system design for air:

1- Locate the coils (terminals and AHUs) that use the water.

2- Locate the chiller plant that supplies the water.

3- Design a piping system that supplies the coils with water from the source and returns the water to the source.
   a) Direct return piping or
   b) Reverse return piping

4- Decide on basic system configuration
   a) 2-pipe
   b) 2-pipe with electric heat
   c) 4-pipe

PIPING LAYOUT PRINCIPALS

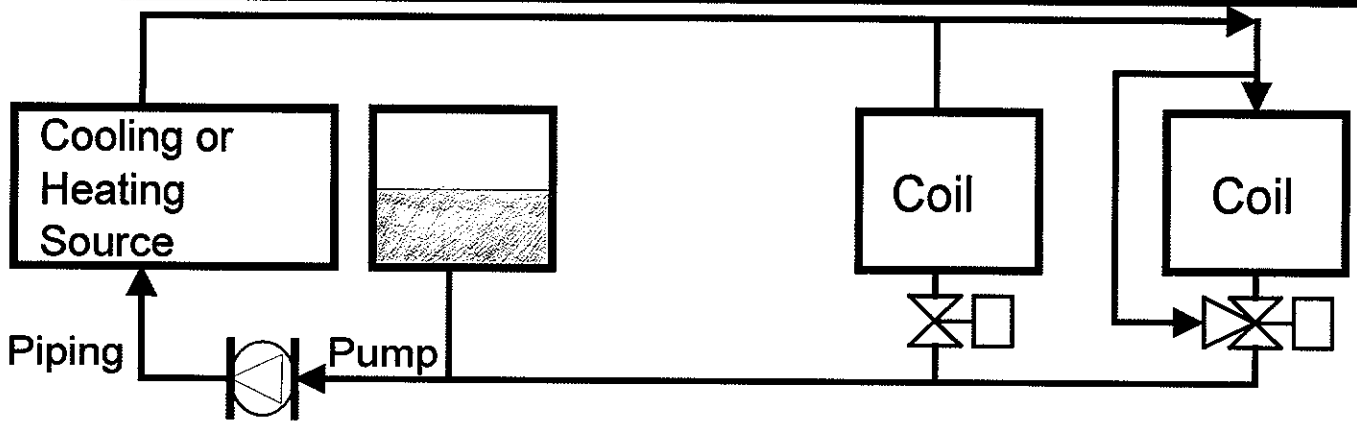

Three essential elements:

- **Coils that use the water**
  - Fan coil terminal units
  - Air handling units
- **Chilled and/or hot water plant(s): (source of water)**
- **Piping system connecting coils to source**
  - Direct return or reverse return piping
  - Basic configuration (2-pipe; 2-pipe w/electric heat; 4-pipe)
- **Provide detailed fittings and valves**

TYPICAL HOTEL ARRANGEMENTS

Let's begin the piping layout with the fan coil units located in the hotel rooms. The fan coil units need to be located in each hotel room.

For this project, we are going to use the stack fan coil units to demonstrate the design process. However, we need to decide on what type of stack unit to use in order to select the units. As shown below, the stack unit can be arranged in (4) possible configurations in a typical hotel room:

1- 42SH - Exposed Cabinet
2- 42SG - Furred-In Stack
3- 42SJ - Back-To-Back Furred-In Stack
4- 42SG - Furred-In Stack Master/Slave

Although the figure below shows the units located against an outside wall, they may be located elsewhere in the room.

The advantage of the back-to-back stacking of the units is that fewer risers are required on any given floor.

STACK HOTEL ROOM ARRANGEMENTS

42SH - Exposed Cabinet

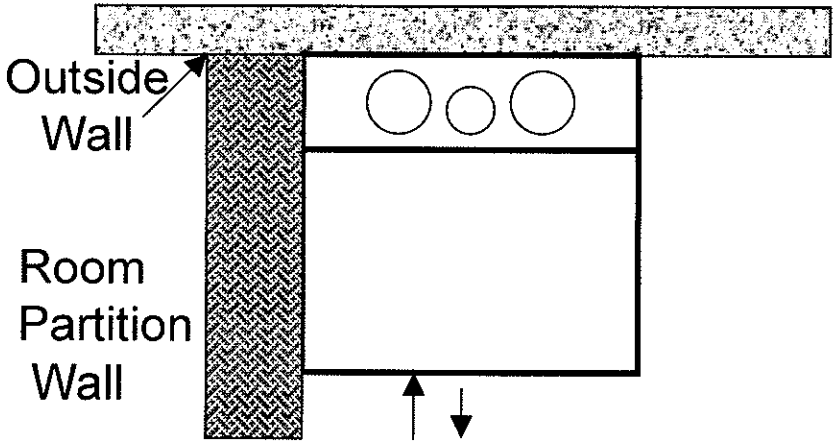

42SJ - Back-To-Back Furred In

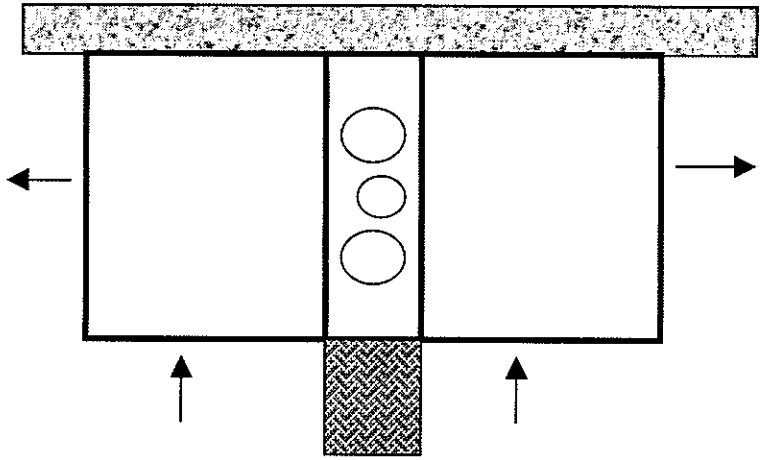

42SG - Furred In Stack

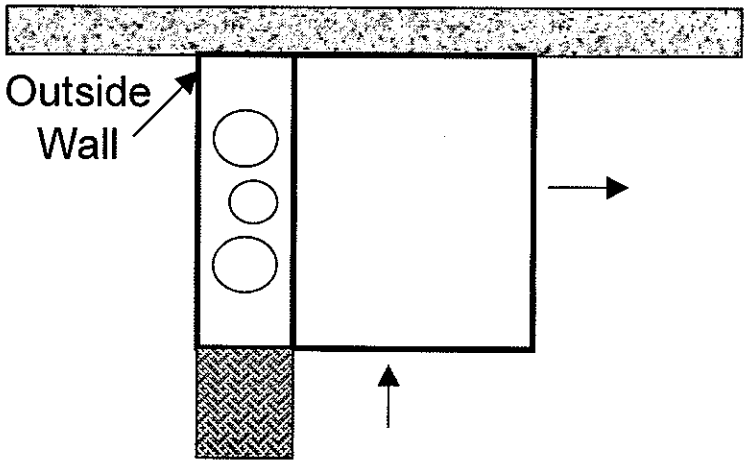

42SG - Furred In Master/Slave

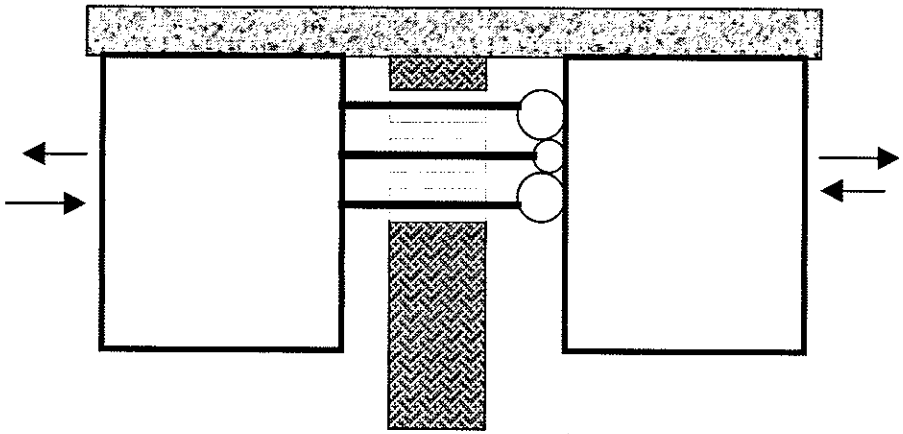

(Plan View)

PROJECT: LOCATE THE UNITS

Find the sketch below in your Design Project. The fan coil units must now be located in the hotel rooms and hallways.

As a team, review the 4 possible 42S hotel room arrangements, and locate the units on the sketch shown below. Also consider locations away from the outside walls.

Justify your selection in the space provided on the Design Project sketch.

PROJECT: LOCATE THE UNITS

- Find this sketch in the Design Project in the back of the book.

- Choose between the four 42S layouts and sketch where your team decided to locate the units. Also consider locations away from outside walls.

- Why?
  Type?
  Location?
  Piping Impact?

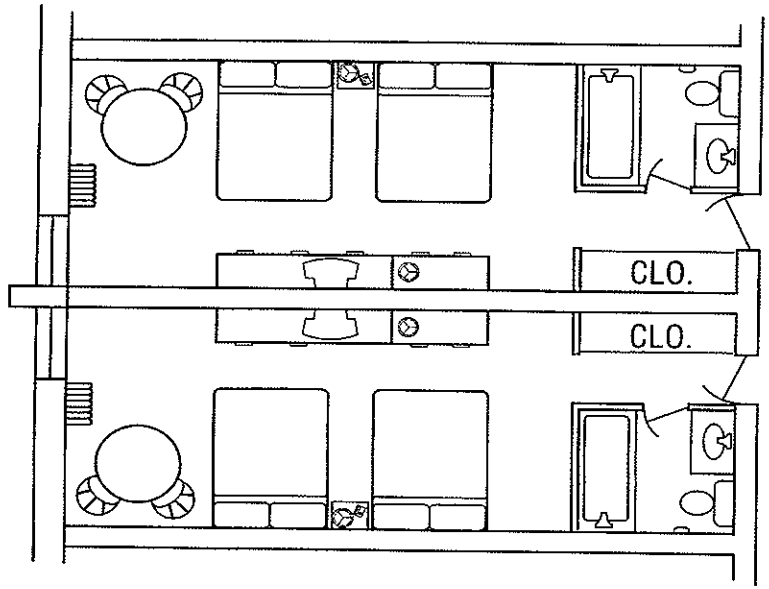



TYPICAL RISER GPM

By locating the "Fan Coil Selection Schedule Form" it can be seen that the North West corner of the 19th floor of the hotel could combine two rooms into a single stack unit - rooms 1901 and 1903. Let's assume they are furred-in with a common riser section between the two rooms as shown on the page below. The chilled water riser would have to deliver 2.7 + 1.8 = 4.5 GPM to the two stack units located in room numbers 1901 and 1903.

A similar calculation could be done for the two rooms on the 18th floor (1801 and 1803.) 2,3 GPM is required by the two stack units serving rooms 1801 and 1803.

In fact each floor from 18 down to 02 will each require 2.3 GPM.

Let's take a look at what a vertical riser GPM layout for this riser might look like as it climbs from the basement to the 19th floor (table at right). This is extracted from the Riser GPM Needs Schedule located in the Design Project material in the back of this book.

The Riser GPM needs at each floor can then be totaled as shown in the right hand column.

You may not want to combine these two rooms in your project. Review the floor needs carefully. This is just an illustration.

EXPOSURE	NW2BED-N2BED	
ROOM NO	01 AND 03	
RISER NO	2	
FLOOR	GPM Ea.	TOT GPM
19	4.5	4.5
18	2.3	6.8
17	2.3	9.1
16	2.3	11.4
15	2.3	13.7
14	2.3	16.0
13	2.3	18.3
12	2.3	20.6
11	2.3	22.9
10	2.3	25.2
9	2.3	27.5
8	2.3	29.8
7	2.3	32.1
6	2.3	34.4
5	2.3	36.7
4	2.3	39.0
3	2.3	41.3
2	2.3	43.6
Riser Tot		43.6

TYPICAL RISER GPM

- From the Fan Coil Selection Schedule for the NW corner rooms:

ROOM FAN COIL SCHEDULE															
NAME: Marvin Patnode				NOTE: 45 F CHILLED WATER 120 F HOT WATER				DATE: Mar 16, 2000							
DESIGN TEAM NUMBER:								JOB NAME: Casino Hotel Example (NW Top Room)							
TAG NAME	UNIT MODEL	NO. OF UNITS	UNIT SIZE-ROWS	COOLING				HEATING						FAN SPEED	FAN MOTOR VOLTAGE
				CAPACITY		GPM	P.D.	COIL		CAPACITY BTUH	GPM	P.D.			
				TOT BTUH	SEN BTUH			TYPE	ROWS						
1901NW TOP	42SJ	1	06-3	14700	9800	2.7	8.1	HW	3	16100	1.8	2.5		Med	277/1/60
1903N TOP	42SJ	1	04-4	10500	6400	1.8	10.3	HW	4	12500	1.8	2.2		Med	277/1/60

- Assume 1 stack unit feeds both rooms in a furred-in back-to-back arrangement

- The GPM required for the 19th floor, the stack unit riser is (2.7 + 1.8) = 4.5

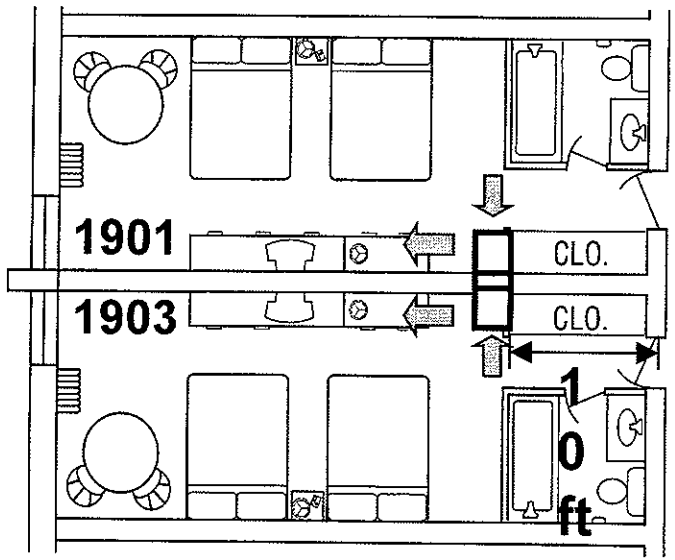



TYPICAL RISER GPM

- A similar calculation can be made for the 18th floor, to find that 2.3 GPM is needed there
- 2.3 GPM is needed on every floor from 18 to 02
- The GPM totals down the supply riser
- The chilled water supply header in the basement would have to supply this riser with a total of 43.6 GPM.

EXPOSURE	NW2BED-N2BE	
ROOM NO	01 AND 03	
RISER NO	2	
FLOOR	GPM Ea.	TOT GPM
19	4.5	4.5
18	2.3	6.8
17	2.3	9.1
16	2.3	11.4
15	2.3	13.7
14	2.3	16.0
13	2.3	18.3
12	2.3	20.6
11	2.3	22.9
10	2.3	25.2
9	2.3	27.5
8	2.3	29.8
7	2.3	32.1
6	2.3	34.4
5	2.3	36.7
4	2.3	39.0
3	2.3	41.3
2	2.3	43.6
Riser Tot		43.6

PROJECT:
LOCATING ALL THE RISERS

- Locate the following floor plan in the Design Project material in the back of this book.
- Locate all the risers needed to supply the fan coil terminals in this building
- Number the risers on your drawing (1, 2, etc.)

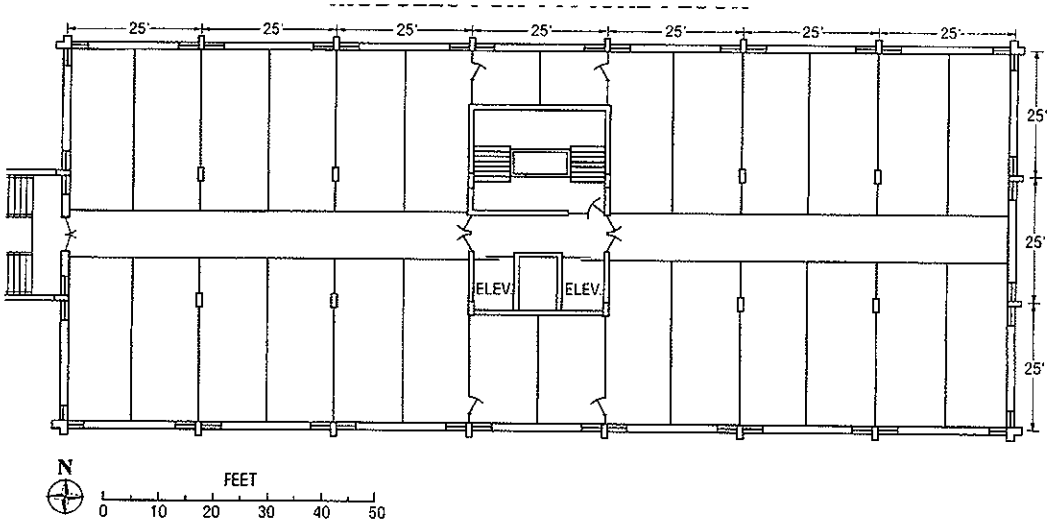

PROJECT:
LOCATE THE VENTILATION UNIT

- The ventilation air handler will be located in the penthouse mechanical room on the roof.
- Locate the ventilation AHU on the same drawing as your risers
- Select and locate a riser to carry the ventilation AHU GPM to the penthouse.

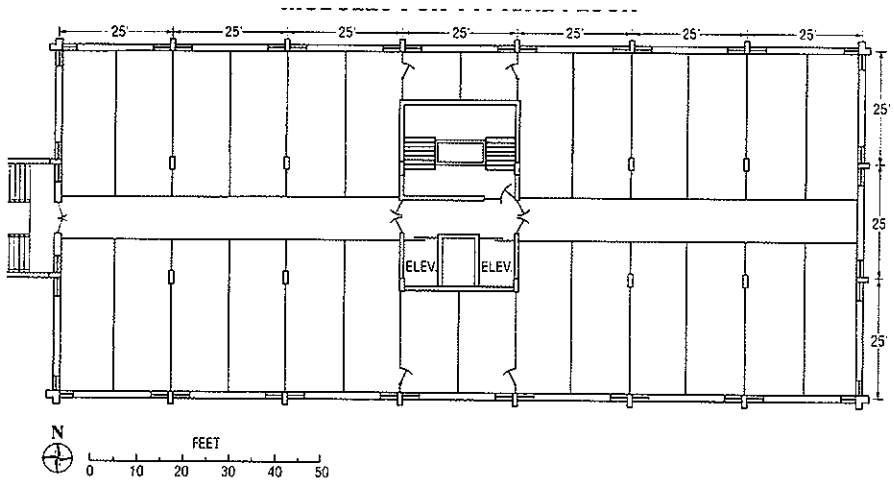

NOTE: The largest size pipe available in a Stack Fan Coil Unit is 2-1/2 inches.

Stack Riser sizes are 1-1/2; 2, and 2-1/2 inches.

LOCATE THE PUBLIC FLOOR AHU UNITS

- **The (2) public floor air handlers will be located in the basement mechanical room.**
- **Locate the Casino AHUs on the same drawing as your risers**

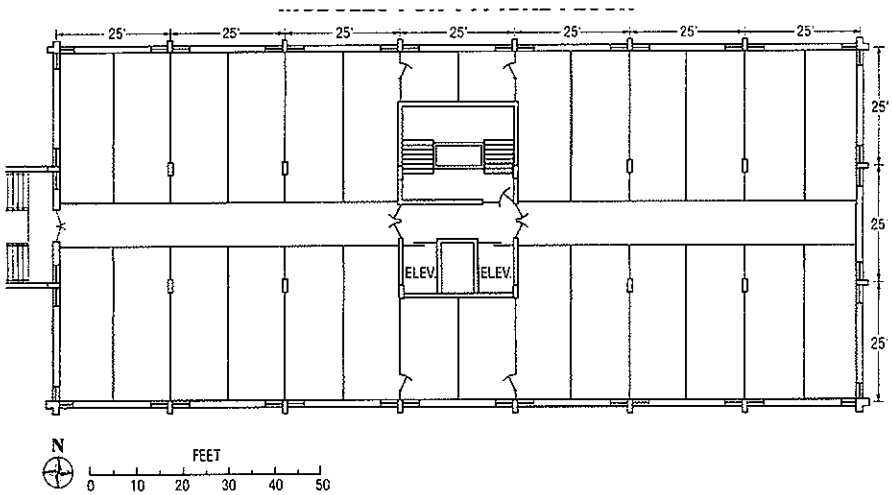

LOCATE THE CHILLER PLANT

- The Chiller Plant will be located in the basement Mechanical Room
- We will decide on how many chillers later in the course
- Locate the Chiller Plant (a box) on the same drawing as your risers

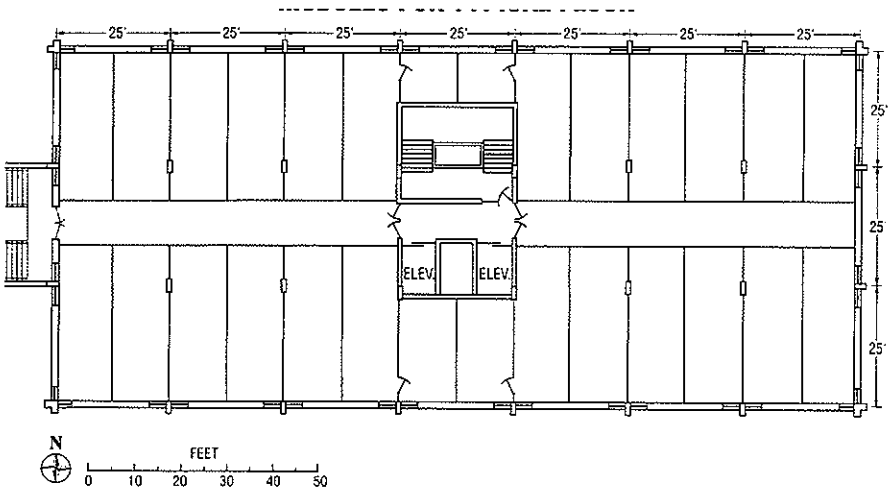

PROJECT: LOCATING UNITS

- Locate the hotel floor plan in the Design Project at the end of this book
- On the Hotel floor plan locate the:
  - –Fan Coil Risers
  - –Public Floor Air Handlers
  - –Ventilation Air Handler
  - –Chiller Plant

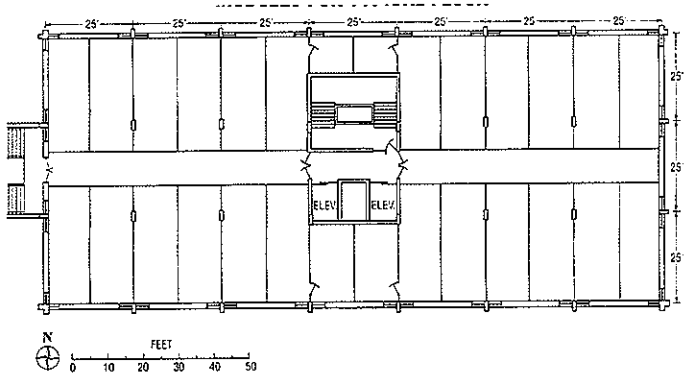



PROJECT: RISER GPM SCHEDULE

- Locate this schedule in the Design Project material
- Find unit GPM from the Fan Coil Selection Schedule
- Find the total GPM required by each riser
- Don't forget the ventilation unit

DATE:			RISER GPM SCHEDULE:						PROJECT PROJECT TEAM NO									
EXPOSURE																		
ROOM NO																		
RISER NO																		
FLOOR	GPM Ea.	TOT GPM	GPM Ea.	TOT GPM	GPM Ea.	TOT GPM	GPM Ea.	TOT GPM	GPM Ea.	TOT GPM	GPM Ea.	TOT GPM	GPM Ea.	TOT GPM	GPM Ea.	TOT GPM	GPM Ea.	TOT GPM
19																		
18																		
17																		
16																		
15																		
14																		
13																		
12																		
11																		
10																		
9																		
8																		
7																		
6																		
5																		
4																		
3																		
2																		
Riser Tot																		



DIRECT OR REVERSE RETURN RISERS

You must now decide on how to connect the risers into a complete Piping System. There are several different ways to do this: (You may want to review 1,2,3,4-pipe under "Basic Water System Concepts" at this time).

1- Two pipes (not including condensate) for each unit riser. This is direct return riser piping. The supply and return headers are in the basement.

2- Three pipes (not including condensate) for each stack unit riser. In this system the risers are reverse return and the supply and return headers are located in the basement.

3- Two pipes (not including condensate) for each stack unit riser. Both the supply and return risers take water up the building.This is a reverse return riser system. The supply header is in the basement and the return header is above the ceiling on the top floor. A single drop returns water back down the building to the water source in the basement. This approach eliminates a third pipe in each riser while gaining the performance benefit of reverse return.

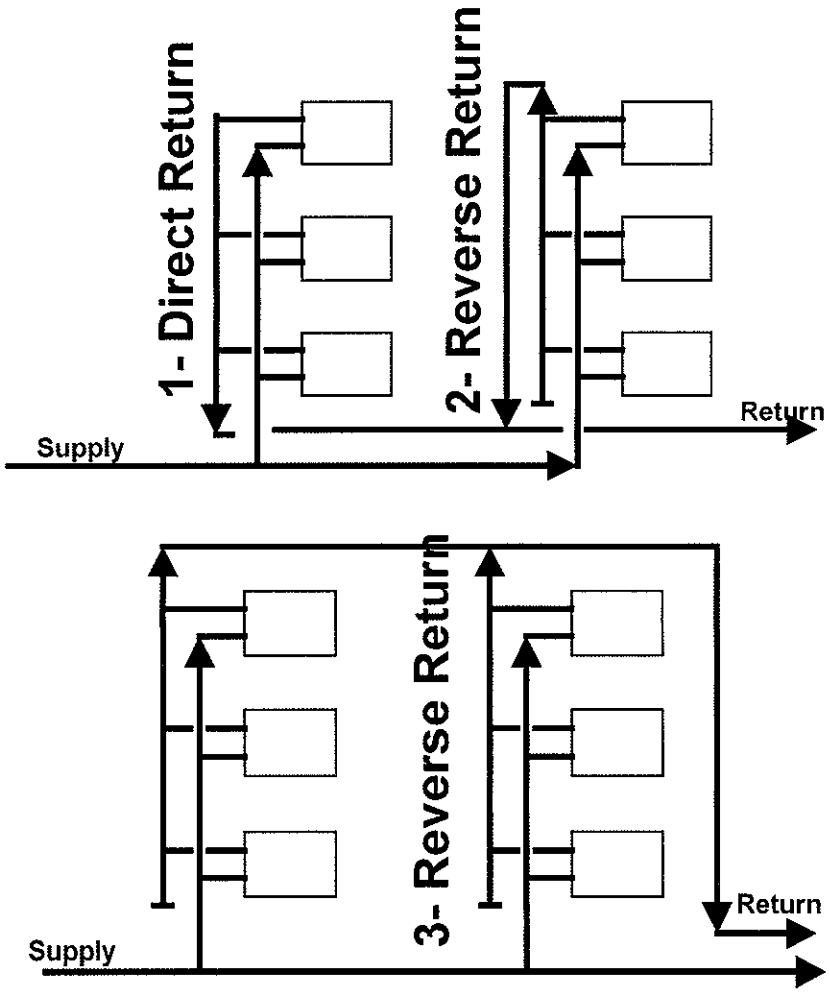

PROJECT: RISER LAYOUT

- Locate the elevation sketch that views the building vertically from the south in the Design Project at the end of this book.
- Show how chilled water is supplied from the Chiller Plant in the basement, flows through all the stack units on the south face and returns to the Chiller Plant.
- Leave the supply and return header lines as stub-outs leading to the Chilled Water Plant that we have yet to design.
- Show GPM values for the supply header and return header as they deliver and collect GPM from the stack unit risers and air handling units.

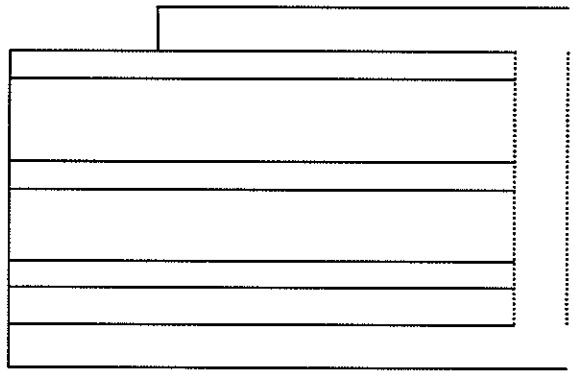



SUPPLY RETURN HEADER DIRECT OR REVERSE RETURN

You must now decide on how to run the supply and return header, so that it runs from the Chiller Plant to the public floor air handlers and to all the stack risers in the building. There are two alternative ways to do this in a horizontal view.

1- Direct Return:
The return header flows around the building in the opposite direction as the supply header.

2- Reverse Return:
The return header flows around the building in the same direction as the supply header.

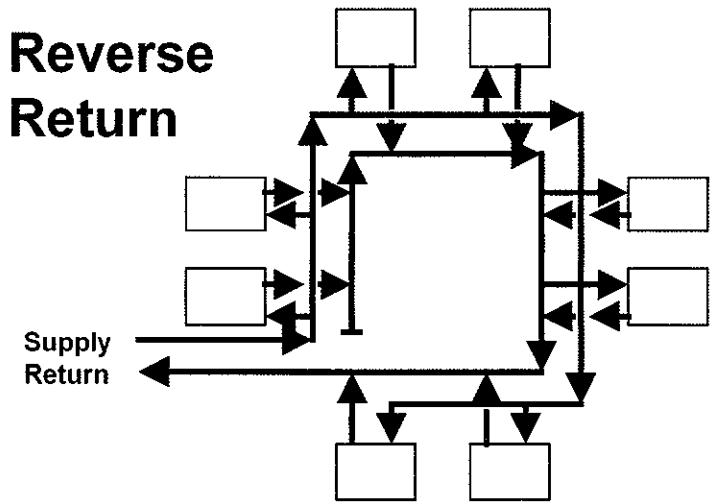

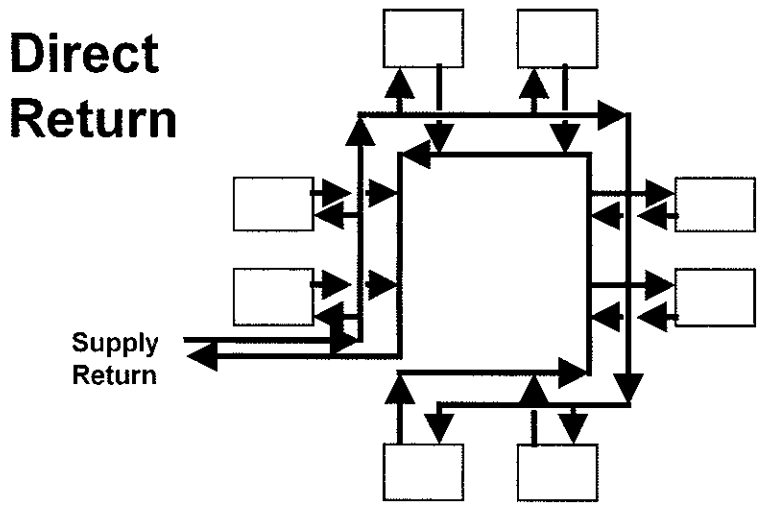

PROJECT:HORIZONTAL HEADERS

- On the sketch below, show how chilled water is supplied from the Chiller Plant to the first floor air handlers, to all of the Stack Unit Risers, and to the ventilation air handler.
- Also show how water is returned.
- Show GPM values for the supply and return headers as the pipes go around the building.

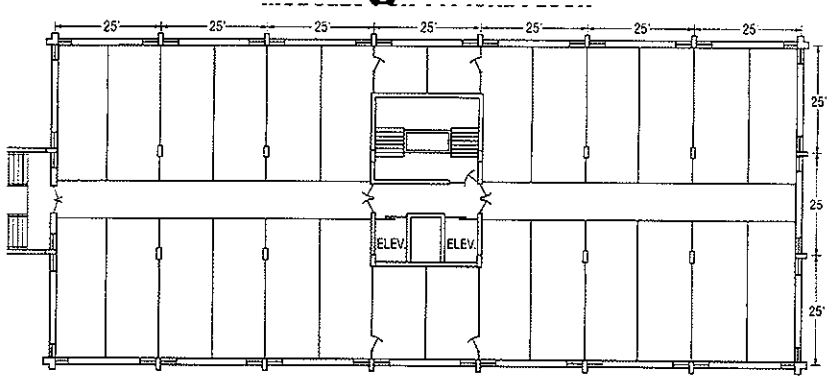

IMPORTANT:
Do not forget to include the GPM needed for the ventilation air handler located in the rooftop penthouse.



TOTAL GPM REQUIRED BY THE BUILDING

It is now time to come up with the total GPM that the chilled water plant will have to supply to the building.
The GPMs must be determined for:
1- All of the fan coil systems
2- The ventilation unit
3- The two air handlers on the first floor

Adding all of them together will establish what the Chiller Plant must supply to the building.

TOTAL GPM REQUIRED BY THE BUILDING

- Assemble in your Design Teams
- Locate the total Chiller Plant GPM Form in your Design Project material at the end of this book.
- Complete the form by finding:
  - Total Fan Coil System GPM
  - Ventilation Unit GPM
  - Total GPM For the two AHUs on the first floor
- This will be needed for pump selection later

TOTAL CHILLED WATER PLANT GPM FORM

TOTAL GPM NEEDED BY ALL THE FAN COIL UNITS: (SHOW YOUR CALCULATIONS)



END

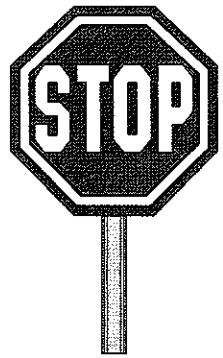

WATER PIPE SIZING

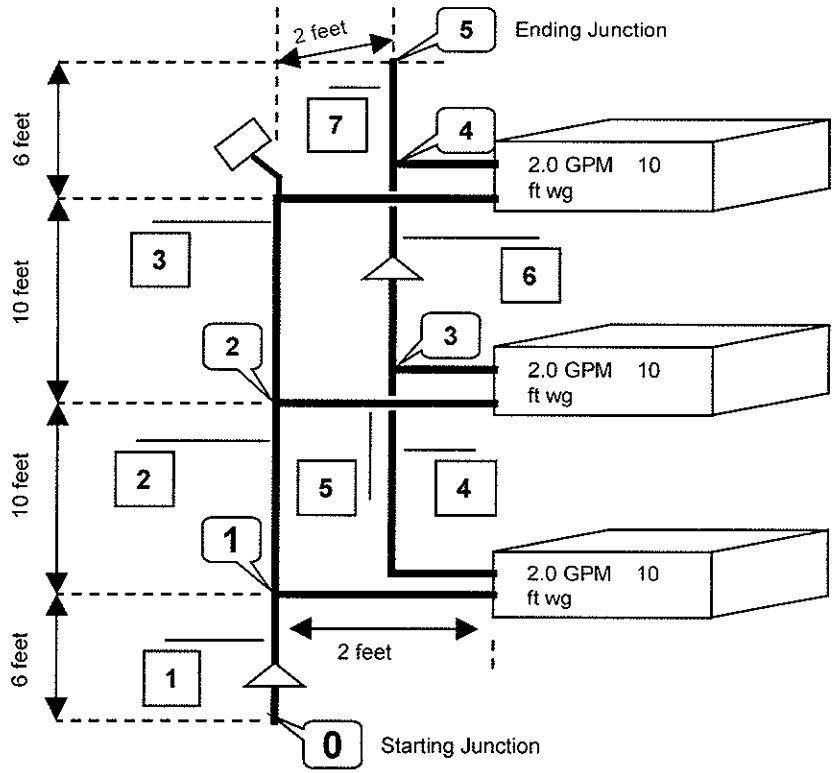

DES700

APPLIED WATER SYSTEM DESIGN

OBJECTIVES

This section of the course is devoted to pipe sizing. Pipe sizing principles and methods will be presented to prepare you to size a fan coil piping system for the design project. Therefore, when you have completed this section you will be able to do the following:

1- Manually size water piping for a Closed or Open Piping System using the Carrier Equivalent Length Method

2- Use the Carrier Pipe Sizing Computer Program to size water piping for a Closed or Open Piping System

3-Use the concept of diversity to minimize pipe and pump sizes when 2-way control valves are used.

OBJECTIVES

- Be able to manually size water piping for a closed or open piping system using the Carrier Equivalent Length Method
- Be able to use the Carrier Pipe Sizing Computer Program to size water piping for a closed or open piping system
- Be able to use the concept of diversity to minimize pipe and pump sizes when 2-way control valves are used

PIPE FRICTION LOSS & VELOCITY LIMITS

After a piping system has been laid out and the required GPM determined for each pipe segment, the pipe segments can be sized and system GPM summarized. Once the system resistance and GPM are known, the system pump can then be sized.

Pipe sizing is based on a target friction loss per running foot of pipe and fluid velocity is used as a limiting factor based on the service use of the pipe.

In the 1997 ASHRAE Handbook of Fundamentals, ASHRAE recommends Water Systems be sized between 1 and 4 ft/100 ft friction rates. In pipes of 2 inch or less, it is suggested that the velocity be limited to no more than 4 ft/sec to minimize noise. In pipe sizes larger than 2 inch, it is suggested that pipes be sized for 4 ft/100ft loss, although it is really left to the designers discretion. An additional qualifier is no more than 10 ft./100ft. in sizes 2" and less.

TABLE 13 - RECOMMENDED WATER VELOCITIES

Service	Velocity Range (fps)
Pump discharge	08 - 12
Pump suction	04 - 07
Drain line	04 - 07
Header	04 - 15
Riser	03 - 10
General service	05 - 10
City water	03 - 07

The Carrier System Design Manual recommends service velocity limits based on the use of the pipe and the effects of erosion (see table 13).

Erosion in Water Piping Systems is caused by the impingement on the inside pipe surface by rapidly moving water containing air bubbles, sand, or other solid matter. This leads to the deterioration of the pipe walls - particularly along the bottom and at the outer bends of elbows.

Since erosion is a function of time, water velocity, and suspended materials, the selection of a design velocity limits for a water system is a matter of judgement. The Carrier System Design Manual offers the following limits based on years of field experience:

TABLE 14 - MAX. VELOCITY FOR MIN. EROSION

Normal Operation (hrs/year)	Max. Velocity (fps)
1500	15
2000	14
3000	13
4000	12
6000	10
8000	08

Pipe velocity may also be limited by the total head available or desirable. For example, in a city water system, the total losses can not exceed the total pressure available in the city main. Economic considerations such as high pumping costs may also place a limit on velocity. Velocity must not be below 1.5 fps or air will not be entrained (moved with the water) back to a point of elimination.

PIPE SIZING

- **Total system resistance needed for selection of system pump**
- **Recommended ASHRAE selection targets:**
  - **4ft / 100 ft: > 2" pipe sizes**
  - **4 ft / sec: ≤ 2" pipe sizes**

TABLE 13 - RECOMMENDED WATER VELOCITIES

Service	Velocity Range (fps)
Pump discharge	08 - 12
Pump suction	04 - 07
Drain line	04 - 07
Header	04 - 15
Riser	03 - 10
General service	05 - 10
City water	03 - 07

- **Carrier suggested limits based on use of pipe and erosion:**
  - **Table 13: use limits**
  - **Table 14: erosion limits**
- **General Guidance:**
  - **No more than 10 ft./100 ft. < 2" pipe**
  - **Not less than 1.5 fps for air entrainment**

TABLE 14 - MAX. VELOCITY FOR MINIMUM EROSION

Normal Operation (hrs/year)	Max. Velocity (fps)
1500	15
2000	14
3000	13
4000	12
6000	10
8000	08

ANALYSIS OF PIPE FRICTION LOSS

The following procedure can be used to size a piping system and then determine the friction loss the piping system offers against the flow of water. We will follow this procedure in this segment of the course.

1- Determine if the system is open or closed. An open system has the water flow exposed to the atmosphere in one or more places. Exposure to the atmosphere at the expansion tank does not constitute an open system.

2- Definition:
In pumping, "head" is a measure of pressure difference expressed in pounds per square inch (psi) or in feet of water as measured by a water gage (ft wg). One psi equals 2.31 feet of water.

3- Determine the pump static head. This head is the difference between the water level on the suction side of the pump and the point of discharge to atmosphere on the discharge side of the pump. The static head is a difference in elevation and is expressed in feet of water. The pump static head in a closed system is zero.

4- Determine the pump friction head. This head is the pressure difference required to overcome the friction of the system components, and thus required to produce water flow. It is expressed in feet of water. To compute friction head follow these steps:

A- Determine the friction head due to pipe, valves, fittings, entrances, and exits as follows:

1. Establish the pipe sizing design criteria:
   a) 4 ft/ 100ft of pipe for sizes $\leq$ 2 Inches
   b) Velocity limits to minimize erosion in pipe sizes above 2 Inches (usually 8 feet per second).
2. Size the pipe using the above criteria and the appropriate Carrier Pipe Sizing Chart (3, 4, or 5), and establish the friction rate loss in the pipe (feet / 100 feet of pipe - typically 4.0 ft/100ft).
3. Find the pipe total equivalent feet of length:
   a) Total Linear Feet of pipe plus
   b) Fitting equivalent feet (Carrier Table 11) plus
   c) Valve equivalent feet (Carrier Table 10) plus
   d) Entrance or exit equivalent feet (Carrier Table 12)
4. Multiply the pipe total equivalent length by the pipe friction rate. For example:
   300 total equivalent feet x 9 ft/100ft = 27 ft wg loss.
5. If the pipe size and or flow rates change in the system, the calculation of equivalent length and friction rate must be made separately for each different size pipe. The sum of the losses for each different pipe size is then added together to arrive at a total piping friction head loss. Devices & piping on the same loop or riser are in parallel - count worst case.

B- Determine the friction head due to equipment such as coils, condensers, meters, control valves, nozzles, etc.

C- Add the results of (3), (4A), and (4B) to arrive at a total piping system friction head.

ANALYSIS OF PIPE FRICTION LOSS

Use the following procedure:

A- Determine pump static head for open piping systems

B- Determine pipe friction head (Charts 3,4 or 5)

- Establish pipe sizing parameters (ft/100ft or velocity)
- Size pipe (carrier charts 3, 4, or 5)
- Find total equivalent length of pipe
  - Find total length of pipe
  - Add fitting equivalent length (carrier table 11)
  - Add valve equivalent length (carrier table 10)
  - Add entrance or exit equivalent length (carrier table 12)
- Repeat the above steps for each pipe size change

C- Determine equipment friction head (coils, nozzles, etc)

D- Total losses from (A + B + C).

PUMPING HEAD

In a closed system, the friction loss through pipe, valves, and fittings is the only resistance the pump must overcome. In this system, the height of the column of water on the suction side of the pump is always equal to the height of the column of water on the discharge side of the pump.

In an open system, this is not true. There is always a difference in head on the two sides of the pump. In a cooling tower, for example, the difference in height between the top of the water in the pan and the exit from the distribution nozzles at the top of the tower constitutes an unbalanced head, which the pump must overcome.

If the distribution system consists of spray nozzles, which require a pressure behind them to force water through the nozzles. This pressure must be added to the unbalanced static head.

The total head on the pump will therefore consist of the pipe friction loss, fitting losses, valve losses, accessory losses, equipment losses (coils or condensers), nozzle losses at the tower, and the unbalanced head in the tower.

PUMPING HEAD

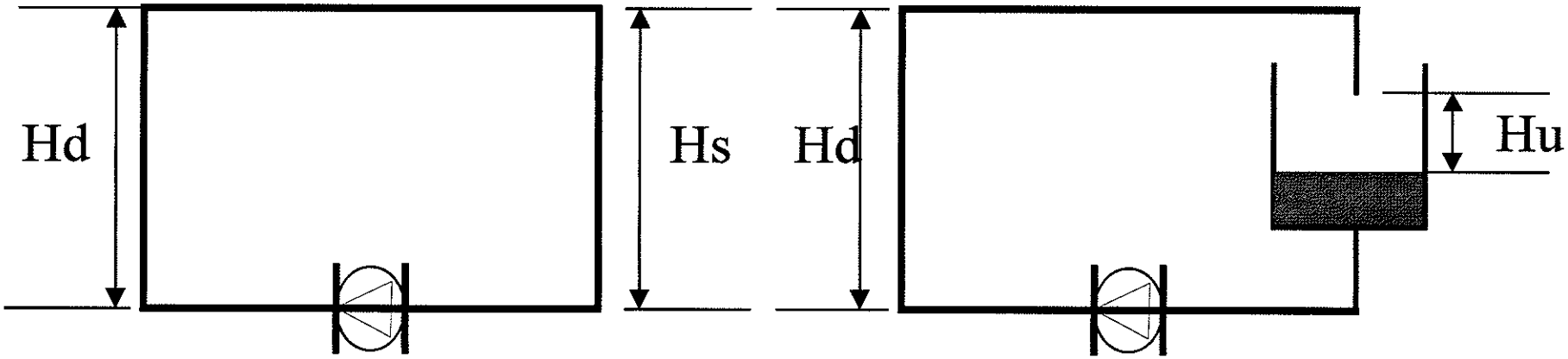

Closed System:

- **Suction head is Hs**
- **Discharge head is Hd**
- **Hs = Hd**
- **Pump overcomes friction loss only**

Open System:

- **Suction head = (Hs - Hu)**
- **Discharge head = Hd**
- **Unbalanced head = Hu**
- **Pump overcomes friction losses plus Hu**

PIPE FRICTION LOSS CHARTS

The rate of friction loss in pipes may be found by using friction loss charts. The friction loss charts 3, 4, and 5 shown on the following pages are from the Carrier System Design Manual and are based on the Darcy-Weisbach formulae.

Charts 3 and 4 are for schedule 40 pipe up to 24 inches in diameter.

Chart 3 is for Closed Recirculating Systems. Chart 3 is for new, smooth, clean, standard weight steel pipe.

Chart 4 is for once through or Open Recirculating systems and applies to steel pipe that has been subject to scaling and corrosion for 15 to 20 years.

Chart 5 is for type K, L, or M copper tubing which can be expected to stay relatively clean throughout its normal life.

The velocity and friction rate boundries for schedule 40 piping on a closed system have been added for your convenience. The smallest sizes shown are 3/4", 1/2" and 3/8".

CHART 3 - CLOSED SYSTEM (Black Steel Pipe)

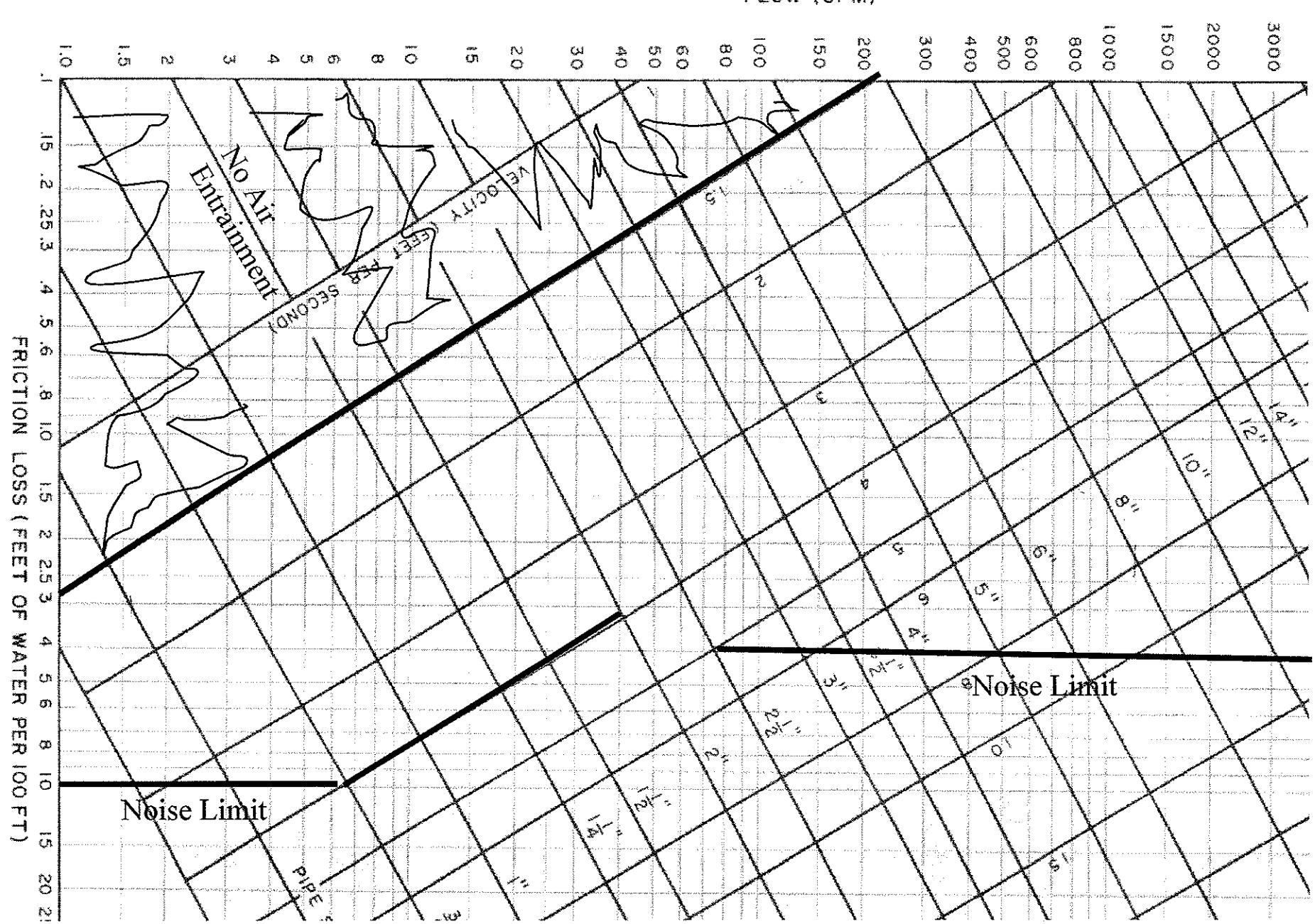

CHART 4 - OPEN SYSTEM

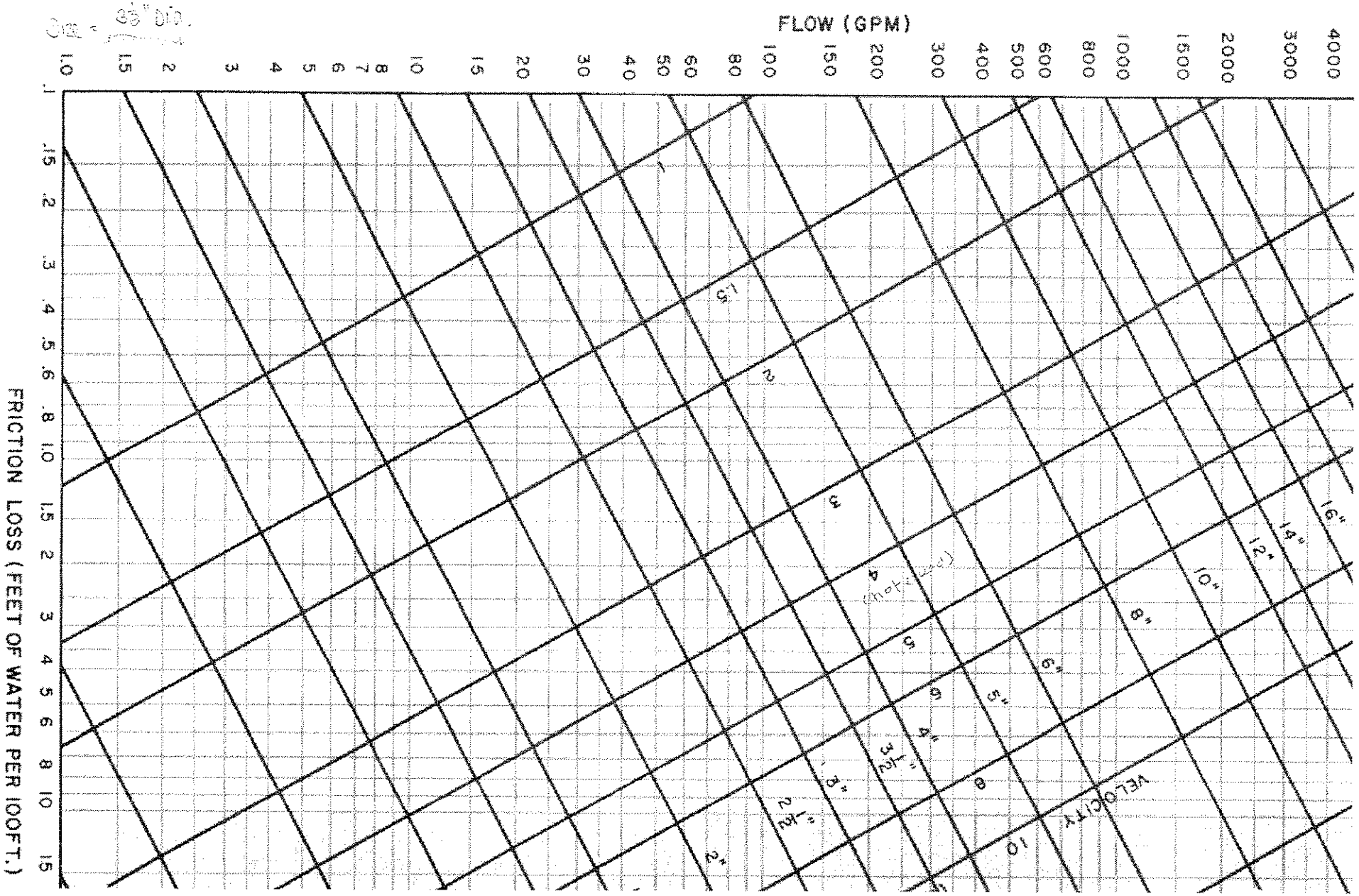

CHART 5 - COPPER TUBING



VALVES AND FITTINGS LOSSES

In most systems, valves and fittings represent greater losses than the pipes themselves. There are a couple of approaches to the method of estimating these losses.

Equivalent Length Method:
Valves, fittings, or obstructions can be assigned an equivalent length of straight pipe to each type and size of fitting as shown in Tables 10, 11, an 12 that follow. These tables come from the Carrier System Design Manual.

For instance, in Table 10, a 4 inch globe valve has an equivalent length of 120 feet. In other words, the friction loss of one globe valve is equivalent to that through 120 feet of 4 inch straight pipe.

ASHRAE k Factor Method:
The 1997 ASHRAE Handbook on Fundamentals shows that the valves and fittings in a piping system cause pressure losses that are greater than the losses caused by the pipe itself. Further, the pressure loss through the valves and fittings may be expressed as:

$P = k (V^2) / 2g$ Where:
P = pressure in feet of fluid
V = Fluid velocity in ft/sec
$g = 32.2$ ft/sec^2, the gravitational constant
k = resistance coefficient for a valve or fitting

The Hydraulic Institute Engineering Data Book shows reference tables that provide "k" values for typical valves, fittings, increasers, diffusers, and reducers.

This method is used by Carrier in its computerized pipe sizing program that we will be utilizing shortly in this session.

VALVE AND FITTING LOSSES

- Valve and fitting losses in a Piping System are greater than the pipe losses
- Several methods of finding these losses:
  - Carrier equivalent length
  - ASHRAE "k" factor
- Carrier equivalent length
  - Uses tables (10, 11, 12)
  - Easy manual method
  - Fitting loss expressed as a length of pipe at the same size
- We will use both methods
- ASHRAE method based on an equation:

  $P = k (V^2) / 2g$ where:
  P = pressure in feet of fluid
  V = fluid velocity in ft/sec
  g = 32.2 ft/sec^2, the gravitational constant
  k = resistance coefficient for a valve or fitting
- The "k" values are published in the Hydraulic Institute's engineering data book
- Carrier's Pipe Sizing Computer Program based on this method

TABLE 10 AND 12

TABLE 10—VALVE LOSSES IN EQUIVALENT FEET OF PIPE*

Screwed, Welded, Flanged, and Flared Connections

NOMINAL PIPE OR TUBE SIZE (in.)	GLOBE†	60°-Y	45°-Y	ANGLE†	GATE††	SWING CHECK‡	Y-TYPE STRAINER‡‡		LIFT CHECK
							Flanged End	Screwed End	
⅜	17	8	6	6	0.6	5	—	—	Globe & Vertical Lift Same as Globe Valve**
½	18	9	7	7	0.7	6	—	3	
¾	22	11	9	9	0.9	8	—	4	
1	29	15	12	12	1.0	10	—	5	
1¼	38	20	15	15	1.5	14	—	9	
1½	43	24	18	18	1.8	16	—	10	
2	55	30	24	24	2.3	20	27	14	
2½	69	35	29	29	2.8	25	28	20	
3	84	43	35	35	3.2	30	42	40	
3½	100	50	41	41	4.0	35	48	—	
4	120	58	47	47	4.5	40	60	—	
5	140	71	58	58	6	50	80	—	
6	170	88	70	70	7	60	110	—	
8	220	115	85	85	9	80	150	—	
10	280	145	105	105	12	100	190	—	
12	320	165	130	130	13	120	250	—	Angle Lift Same as Angle Valve
14	360	185	155	155	15	135	—	—	
16	410	210	180	180	17	150	—	—	
18	460	240	200	200	19	165	—	—	
20	520	275	235	235	22	200	—	—	
24	610	320	265	265	25	240	—	—	

*Losses are for all valves in fully open position and strainers clean.

†These losses do not apply to valves with needle point type seats.

‡Losses also apply to the in-line, ball type check valve.

**For "Y" pattern globe lift check valve with seat approximately equal to the nominal pipe diameter, use values of 60° "Y" valve for loss.

††Regular and short pattern plug cock valves, when fully open, have same loss as gate valve. For valve losses of short pattern plug cocks above 6 ins. check manufacturer.

‡‡For .045 thru 3/16 in. perforations with screens 50% clogged, loss is doubled.

TABLE 12—SPECIAL FITTING LOSSES IN EQUIVALENT FEET OF PIPE

NOM. PIPE OR TUBE SIZE (in.)	SUDDEN ENLARGEMENT* d/D			SUDDEN CONTRACTION* d/D			SHARP EDGE*		PIPE PROJECTION*	
	¼	½	¾	¼	½	¾	Entrance	Exit	Entrance	Exit
⅜	1.4	0.8	0.3	0.7	0.5	0.3	1.5	.8	1.5	1.1
½	1.8	1.1	0.4	0.9	0.7	0.4	1.8	1.0	1.8	1.5
¾	2.5	1.5	0.5	1.2	1.0	0.5	2.8	1.4	2.8	2.2
1	3.2	2.0	0.7	1.6	1.2	0.7	3.7	1.8	3.7	2.7
1¼	4.7	3.0	1.0	2.3	1.8	1.0	5.3	2.6	5.3	4.2
1½	5.8	3.6	1.2	2.9	2.2	1.2	6.6	3.3	6.6	5.0
2	8.0	4.8	1.6	4.0	3.0	1.6	9.0	4.4	9.0	6.8
2½	10	6.1	2.0	5.0	3.8	2.0	12	5.6	12	8.7
3	13	8.0	2.6	6.5	4.9	2.6	14	7.2	14	11
3½	15	9.2	3.0	7.7	6.0	3.0	17	8.5	17	13
4	17	11	3.8	9.0	6.8	3.8	20	10	20	16
5	24	15	5.0	12	9.0	5.0	27	14	27	20
6	29	22	6.0	15	11	6.0	33	19	33	25
8	—	25	8.5	—	15	8.5	47	24	47	35
10	—	32	11	—	20	11	60	29	60	46
12	—	41	13	—	25	13	73	37	73	57
14	—	—	16	—	—	16	86	45	86	66
16	—	—	18	—	—	18	96	50	96	77
18	—	—	20	—	—	20	115	58	115	90
20	—	—	—	—	—	—	142	70	142	108
24	—	—	—	—	—	—	163	83	163	130

*Enter table for losses at smallest diameter "d."

TABLE 11

Screwed, Welded, Flanged, Flared, and Brazed Connections

NOMINAL PIPE OR TUBE SIZE (in.)	SMOOTH BEND ELBOWS						SMOOTH BEND TEES			
	90° Std*	90° Long Rad.†	90° Street*	45° Std*	45° Street*	180° Std*	Flow-Thru Branch	Straight-Thru Flow		
								No Reduction	Reduced ¼	Reduced ½
⅜	1.4	0.9	2.3	0.7	1.1	2.3	2.7	0.9	1.2	1.4
½	1.6	1.0	2.5	0.8	1.3	2.5	3.0	1.0	1.4	1.6
¾	2.0	1.4	3.2	0.9	1.6	3.2	4.0	1.4	1.9	2.0
1	2.6	1.7	4.1	1.3	2.1	4.1	5.0	1.7	2.3	2.6
1¼	3.3	2.3	5.6	1.7	3.0	5.6	7.0	2.3	3.1	3.3
1½	4.0	2.6	6.3	2.1	3.4	6.3	8.0	2.6	3.7	4.0
2	5.0	3.3	8.2	2.6	4.5	8.2	10	3.3	4.7	5.0
2½	6.0	4.1	10	3.2	5.2	10	12	4.1	5.6	6.0
3	7.5	5.0	12	4.0	6.4	12	15	5.0	7.0	7.5
3½	9.0	5.9	15	4.7	7.3	15	18	5.9	8.0	9.0
4	10	6.7	17	5.2	8.5	17	21	6.7	9.0	10
5	13	8.2	21	6.5	11	21	25	8.2	12	13
6	16	10	25	7.9	13	25	30	10	14	16
8	20	13	—	10	—	33	40	13	18	20
10	25	16	—	13	—	42	50	16	23	25
12	30	19	—	16	—	50	60	19	26	30
14	34	23	—	18	—	55	68	23	30	34
16	38	26	—	20	—	62	78	26	35	38
18	42	29	—	23	—	70	85	29	40	42
20	50	33	—	26	—	81	100	33	44	50
24	60	40	—	30	—	94	115	40	50	60

NOMINAL PIPE OR TUBE SIZE (in.)	MITRE ELBOWS			
	90° Ell	60° Ell	45° Ell	30° Ell
⅜	2.7	1.1	0.6	0.3
½	3.0	1.3	0.7	0.4
¾	4.0	1.6	0.9	0.5
1	5.0	2.1	1.0	0.7
1¼	7.0	3.0	1.5	0.9
1½	8.0	3.4	1.8	1.1
2	10	4.5	2.3	1.3
2½	12	5.2	2.8	1.7
3	15	6.4	3.2	2.0
3½	18	7.3	4.0	2.4
4	21	8.5	4.5	2.7
5	25	11	6.0	3.2
6	30	13	7.0	4.0
8	40	17	9.0	5.1
10	50	21	12	7.2
12	60	25	13	8.0
14	68	29	15	9.0
16	78	31	17	10
18	85	37	19	11
20	100	41	22	13
24	115	49	25	16

*R/D approximately equal to 1. †R/D approximately equal to 1.5.

PIPE JUNCTIONS AND SECTIONS

When sizing piping, either manually or by computer, it is best to break the piping layout down into simpler segments. This makes a complex problem simple and provides a framework to keep track of pipe segments and fittings. Two important terms stand out in this process:

1- Junctions
2- Pipe Sections

Junctions:
A junction is defined in three ways:
1- A junction is wherever the piping causes the water to separate or converge. Junction no. 1 on the next page is where water separates and junction 2 is where water converges. Each junction is given a unique numerical tag (1, or 2, or 3, etc.)
2- Where a water piping system begins is called a starting junction and is labeled (0).
3- Where a water piping system ends is called an ending junction (4) and is given a unique numerical tag. The diagram shown has junctions 0,1,2 & 3.

Pipe Sections:
The pipe segments that run between junctions are called pipe sections. They too are given unique numerical tags. There are four pipe segments on the next page diagram (1,2,3, and 4).

The numerical tags for piping sections must be unique, and the numerical tags for junctions must be unique, however, a pipe section may have the same tag number as a pipe junction. The best way to keep them straight is by labeling the piping layout, as shown below, before sizing the piping.

PIPE JUNCTIONS AND SECTIONS

- **Junctions:** x
  - Water separates (1) or converges (2)
  - Water flow begins (starting junction) -(0)
  - Water flow ends (ending junction) - (3)
  - Each has a unique numerical tag
- **Pipe Section:** y
  - Pipe that runs between two junctions (1,2,3,4)
  - Each has unique numerical tag

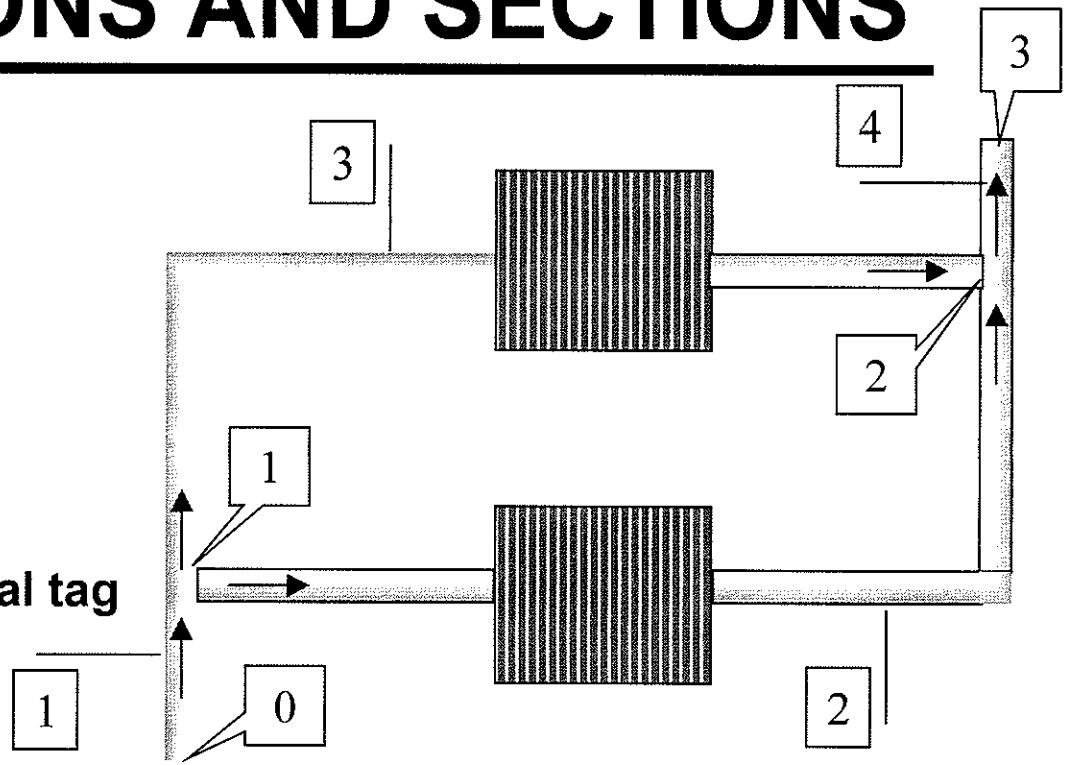

- **Junctions and sections can have the same numerical tags**
- **Keep straight by labeling the piping layout before sizing**

PIPE SIZING EXAMPLE

- One Pipe Section
- Two Junctions

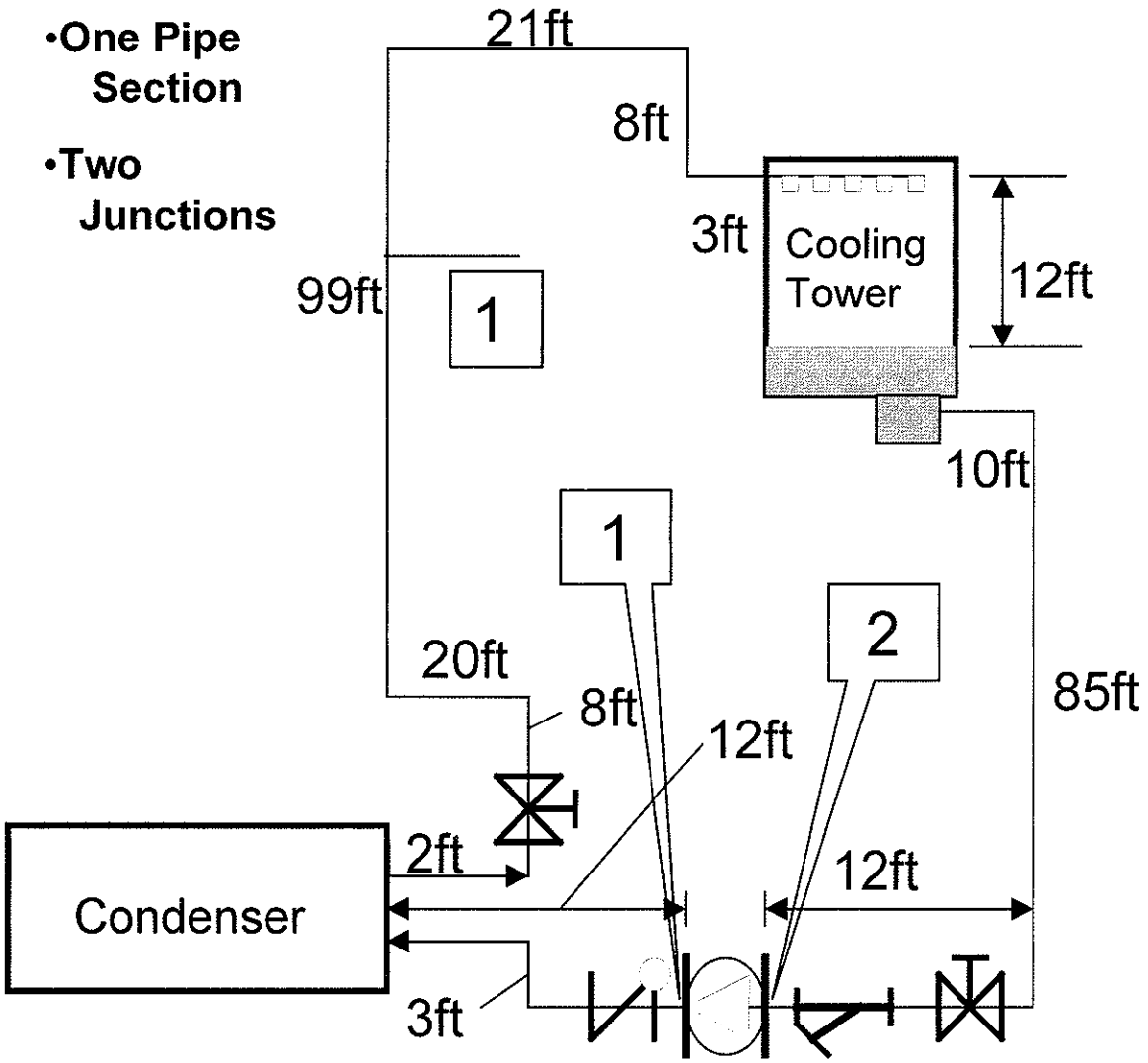

- **GPM: 1200**
- **Maximum velocity: 8 fps**
- **Use Manual Carrier Method**
- **Tower nozzles: 8 psi**
- **Condenser drop: 13 psi**
- **Strainer loss: 4 psi**
- **All elbows are long radius**

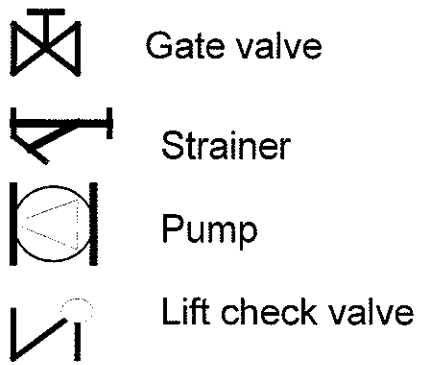

SIZE PIPE: CHART 4

TABLE 13 - RECOMMENDED WATER VELOCITIES

Service	Velocity Range (fps)
Pump discharge	08 - 12
General service	05 - 10
City water	03 - 07

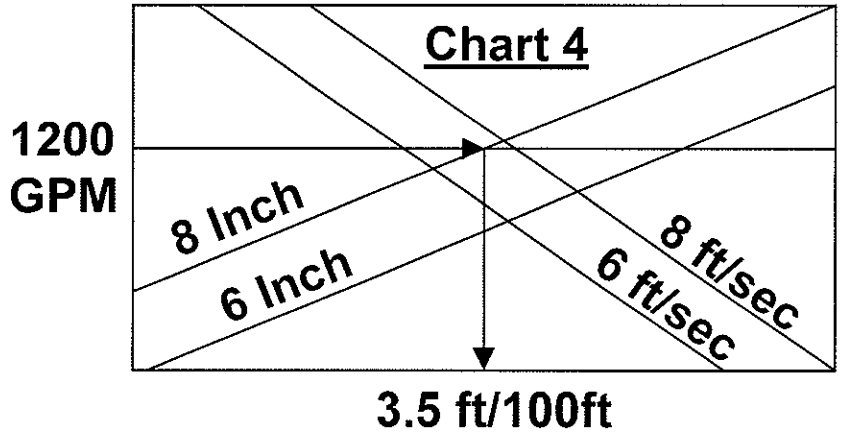

- **Service: Condenser Circuit: (General, choose 8 ft/sec)**
- **For 1200 GPM @ 8 ft/sec, chart 4 gives 8 inch pipe size @ 3.5 ft / 100 ft loss.**
- **Total length of straight pipe:**
  - **Measured to center of fittings (from tower outlet)**
  - **(10 + 85 + 12 + 12 + 3 + 2 + 8 + 20 + 99 + 21 + 8 + 3) = 283 feet**

FITTING LOSSES: TABLES 11, 12

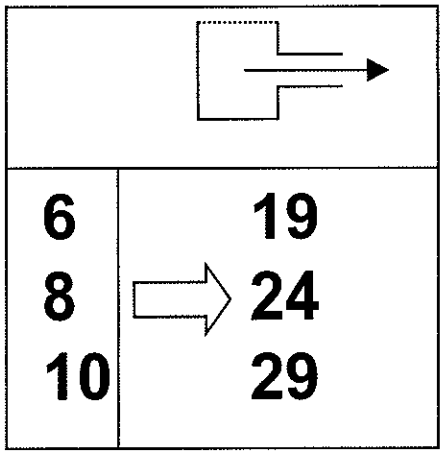

6	19
8	24
10	29

Table 12

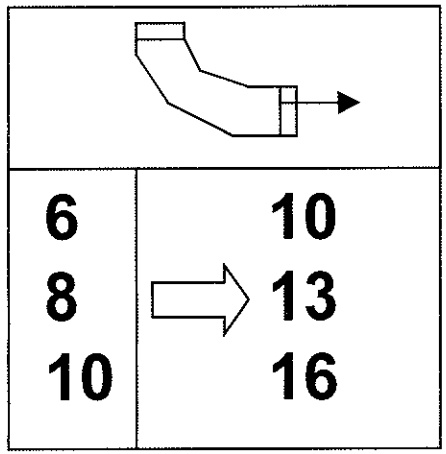

6	10
8	13
10	16

Table 11

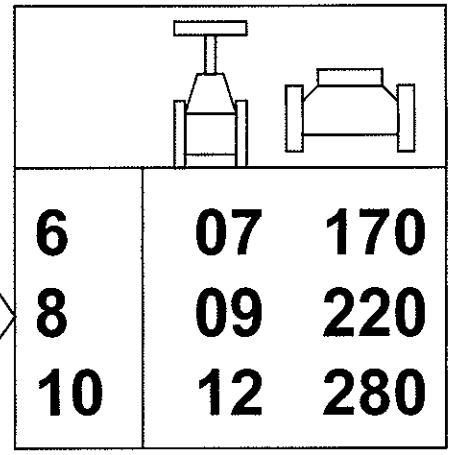

6	07	170
8	09	220
10	12	280

Table 10

- Table 12, (exit loss, 8” sharp) 24 ft
- Table 11, (long radius elbow) 13’ x 10 130 ft
- Table 10, (8” gate valve) - two of them 9’ x 2 18 ft
- Table 10, (8” lift check, same as globe) 220 ft

PIPE SIZING EXAMPLE

- From Chart 4 @ 1200 gpm find that an 8 inch pipe gives 7.5 fps velocity and 3.5 ft. per 100 ft. friction loss
- Total straight length of pipe (starting at tower sump) =
  (10 + 85 + 12 + 12 + 3 + 2 + 8 + 20 + 99 + 21 + 8 + 3)= 283 ft.
- Equivalent lengths:
  Exit loss from sump (8 in., sharp edge exit - Table 12) 24 ft
  Elbows (long radius, 8 in. - Table 11) 10 x 13 = 130 ft
  Gate valves (8 in. - Table 10) 2 x 9 = ... 18 ft
  Lift check valve (8 in. same as globe - Table 10) ..... 220 ft
- Total equivalent length ..... 675 ft
- Total friction loss = (675 ft x 3.5 ft/100ft) = ... 24 ft
- Total head on pump:

Strainer	4 psi			
Condenser	13 psi			
Nozzles	8 psi			
Subtotal ..	25 psi	x	2.31 ft / psi = ...	58 ft
Friction head				24 ft
Unbalanced tower head				12 ft
Total pump head				94 ft

REVERSE RETURN PROBLEM

Here is another problem to help get familiar with junctions and sections, as well as learning how to assign and use them.

The following page contains a diagram with three chilled water coils. Each coil has a 10 ft pressure drop while 2 GPM flows through it.

A supply and return header arranged in a reverse return manner supply the three fan coil units. A blow up of a typical coil shows that each coil contains a gate valve and a globe (control) valve in its supply line and a gate valve in its return line. The standard factory supplied valve package has been selected, so the valve size matches the line size. Two-way, two-position motoized control valves are used.

The task is to size all the piping and to establish the friction loss for each of the three piping circuits (one per coil). In doing so, we will use a maximum friction rate of 4ft/100ft as recommended by ASHRAE for pipe sizes 2 inches or less, and we will further limit the velocity to 4 ft.sec. for pressure drop reasons. Finally, we will set a lower velocity limit of 1.5 ft./sec. To avoid air accumulating in the piping.

The first thing to do is to establish pipe junctions. The (0) junction is assigned to the beginning of the supply pipe which provides 6 GPM to the three circuits. Junctions 2,3, and 4 define the separation and convergence of the piping system as it supplies 2 GPM to each coil. Junction 5 is assigned to the end of the return header where 6 GPM has been collected from the coils.

Pipe sections 1 through 7 define all the unique pipe connections between the junctions. Supply and return pipes connected to the same coil have the same GPM, so they are considered as the same pipe section.

To illustrate the sizing process and to verify the equalized pressure drop characteristic of reverse return piping, we will look at two circuits:

a) Piping segments: 1-4-6-7
b) Piping segments: 1-2-3-7

To help us with the problem, the form shown below will organize the data in a logical way. . Let's take a look at how to use the form. Blank copies are in the design project tab.

LINE SIZED @ 4 ft / 100 ft - Chart 3

PIPE SECT.	JUNC-TIONS	PIPE LNGTH (feet)	GPM	KNOWN LOSS (feet wg)	LINE SIZE (inch)	FRICT RATE (ft / 100ft)	Straight Thru "T"	Branch "T"	Gate Valve	Globe Valve	ELBOW 90 deg	OTHER FITTING	TOT. EQ LNGTH (feet)	LOSS (ft wg)
Total Circuit Pressure Loss														

REVERSE RETURN SIZING PROBLEM

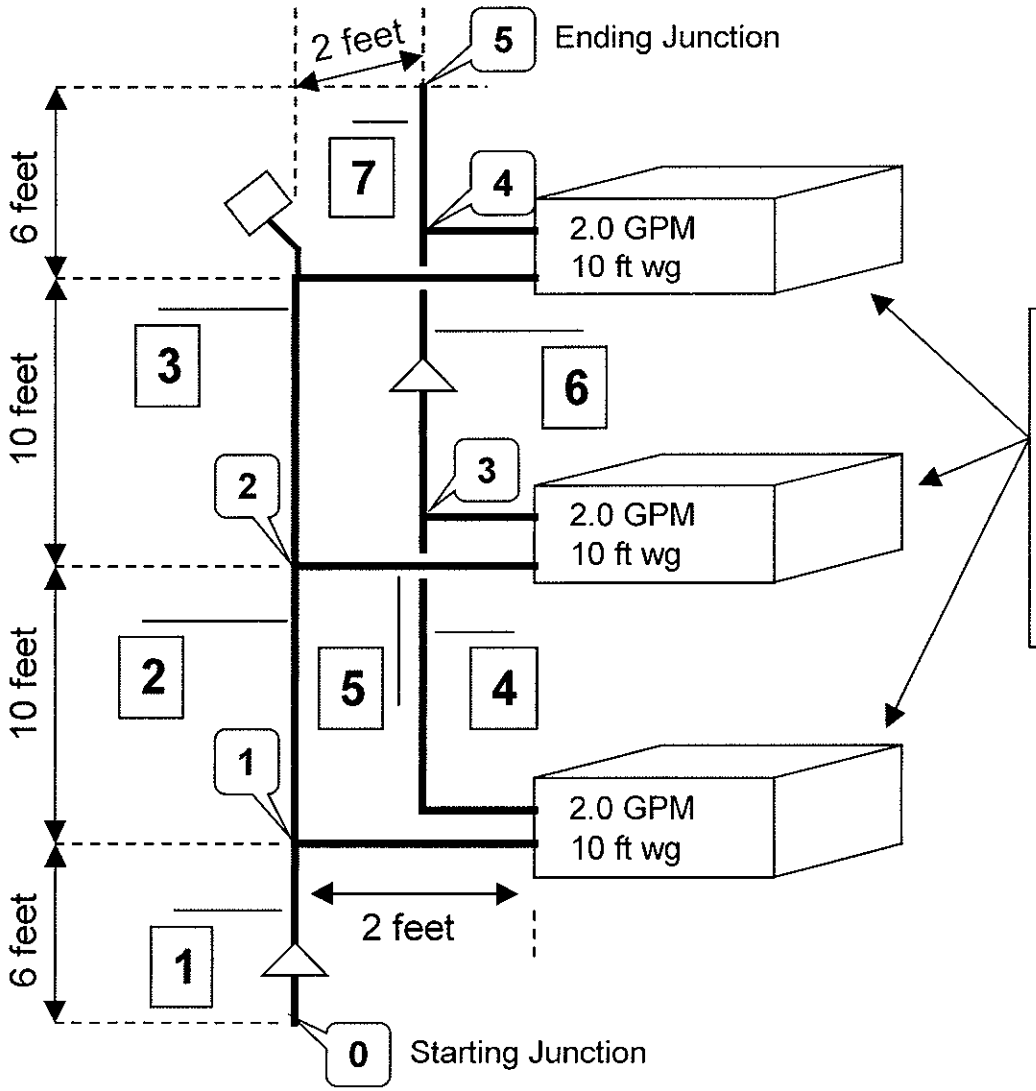

- > 2" pipe, target pipe size @ 4 ft / 100 ft friction rate.
- < 2" pipe, target velocity not to exceed 2.5 ft/sec.

Determine friction loss for these circuits using the Carrier Charts:
Pipe segments: 1 - 4 - 6 - 7
Pipe segments: 1 - 2 - 3 - 7

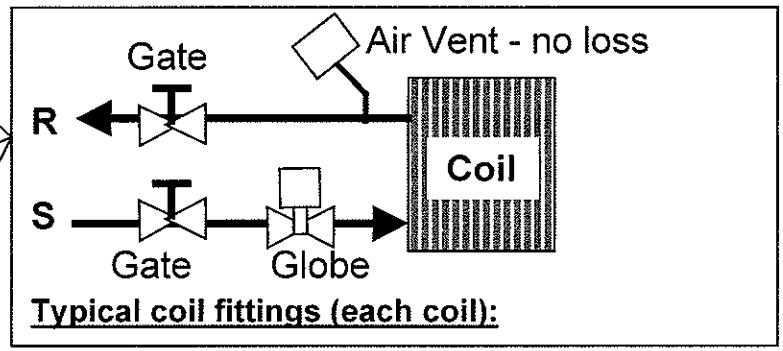

Typical coil fittings (each coil):

4 — **Pipe section - between junctions**

0 — **Pipe junction where water converges or diverges or starts and ends**

REVERSE RETURN SIZING - ALL CIRCUITS

What follows is the piping worksheet completed for all circuits and pipe sections. It is completed in the numerical order of the pipe sections. Eventually, all the pipe sections must be designed and recorded in this manner.

This worksheet can either be used for doing the sizing and pressure drop calculations manually, or else it can serve as a worksheet to prepare input for a computerized pipe sizing program. In this module, it will be used for both.

You will note that each of the fan coil circuits begins with a line of data which summarizes that circuit and is followed by lines that give the details for supply, coil, and return.

When all circuits are recorded like this, the pressure drop for the pump is not determined by simply adding up all the pressure drops. Circuits that feed the fan coils are in parallel as far as hydraulic pressure drop is concerned. The worst case circuit will determine the required pump head.

Date: Today

Job: DES700 Demonstrator

W a t e r P i p i n g D e s i g n W o r k s h e e t

Name: The Piper

Sheet: 1 of 1

Sect.	Junction Begin	Junction End	Sup. (x)	Ret (x)	Other ( )	Sect. GPM	Peak GPM	Div. GPM	Pipe Size	Pipe Len.	Fittings	Fit. E.L.	Tot. E.L.	Fric. Rate	ΔP in.wg
1	0	1	x			6	-	-	3/4	6	Thru T @1	1.4	7.4	8.2	0.61
2	1	2	x			4	-	-	3/4	10	Thru T @2	1.9	11.9	4.1	0.49
3	2	4	x	x	Coil	2	-	-	1/2	14	(See segments below)			4.6	
	2	Coil	x			2	-	-	1/2	12	90° ell / Gate / Globe	19.7	31.7	4.6	1.46
	Fan	Coil			Coil	2									10.0
	Coil	4		x		2	-	-	1/2	2	Gate / Branch T @4	3.7	5.7	4.6	0.26
4	1	3	x	x	Coil	2	-	-	1/2	14	(See segments below)			4.6	
	1	Coil	x			2	-	-	1/2	2	Branch T @1 / Gate / Globe	21.7	23.7	4.6	1.09
	Fan	Coil			Coil	2									10.0
	Coil	3		x		2	-	-	1/2	12	Gate / 90° ell	1.7	13.7	4.6	0.63
5	2	3	x	x	Coil	2	-	-	1/2	4	(See segments below)			4.6	
	2	Coil	x			2	-	-	1/2	2	Branch T @2 / Gate / Globe	21.7	23.7	4.6	1.09
	Fan	Coil			Coil	2									10.0
	Coil	3		x		2	-	-	1/2	2	Gate / Branch T @3	3.7	5.7	4.6	0.26
6	3	4		x		4	-	-	3/4	10	Thru T @3	1.4	11.4	4.1	0.47
7	4	5		x		6	-	-	3/4	6	Thru T @4	1.4	7.4	8.2	0.61

Notes:

Date: Today
Job: DES700 Demonstrator Circuits

Water Piping Design Worksheet

Name: The Piper
Sheet: 1 of 1

Sect.	Junction Begin	Junction End	Sup. (x)	Ret (x)	Other ( )	Sect. GPM	Peak GPM	Div. GPM	Pipe Size	Pipe Len.	Fittings	Fit. E.L.	Tot. E.L.	Fric. Rate	ΔP in.wg
Checking the circuit Δp feeding first fan coil, pipe sections 1-4-6-7															
1	0	1	x			6	-	-	3/4	6	Thru T @ 1	1.4	7.4	8.2	0.61
4	1	3	x	x	Coil	2	-	-	1/2	2	(See segments below)			4.6	
	1	Coil	x			2	-	-	1/2	2	Branch T @ 1 / Gate / Globe	21.7	23.7	4.6	1.09
	Fan	Coil			Coil	2									10.0
	Coil	3		x		2	-	-	1/2	12	Gate / 90° ell	1.7	13.7	4.6	0.63
6	3	4		x		4	-	-	3/4	10	Thru T @ 3	1.4	11.4	4.1	0.47
7	4	5		x		6	-	-	3/4	6	Thru T @ 4	1.4	7.4	8.2	0.61
													Total Cir.=13.41		
Checking the circuit Δp feeding last fan coil, pipe sections 1-2-3-7															
1	0	1	x			6	-	-	3/4	6	Thru T @ 1	1.4	7.4	8.2	0.61
2	1	2	x			4	-	-	3/4	10	Thru T @ 2	1.9	11.9	4.1	0.49
3	2	4	x	x	Coil	2	-	-	1/2	14	(See segments below)			4.6	
	2	Coil	x			2	-	-	1/2	12	90° ell / Gate / Globe	19.7	31.7	4.6	1.46
	Fan	Coil			Coil	2									10.0
	Coil	4		x		2	-	-	1/2	2	Gate / Branch T @ 4	3.7	5.7	4.6	0.26
7	4	5		x		6	-	-	3/4	6	Thru T @ 4	1.4	7.4	8.2	0.61
													Total Cir.=13.41		

Notes:

MANUAL SOLUTION

- **This is a Reverse Return System**
- **The pressure loss through both circuits is the same**

Date: _Today_ Name: _The Piper_

Job: _DES700 Demonstrator Circuits_ Water Piping Design Worksheet Sheet: _1 of 1_

Sect.	Junction Begin	Junction End	Sup. (x)	Ret (x)	Other ( )	Sect. GPM	Peak GPM	Div. GPM	Pipe Size	Pipe Len.	Fittings	Fit. E.L.	Tot. E.L.	Fric. Rate	ΔP in.wg
Checking the circuit Δp feeding first fan coil, pipe sections 1-4-6-7															
1	0	1	x			6	-	-	3/4	6	Thru T @ 1	1.4	7.4	8.2	0.61
4	1	3	x	x	Coil	2	-	-	1/2	2	(See segments below)			4.6	
	1	Coil	x			2	-	-	1/2	2	Branch T @ 1 / Gate / Globe	21.7	23.7	4.6	1.09
	Fan	Coil			Coil	2									10.0
	Coil	3		x		2	-	-	1/2	12	Gate / 90° ell	1.7	13.7	4.6	0.63
6	3	4		x		4	-	-	3/4	10	Thru T @ 3	1.4	11.4	4.1	0.47
7	4	5		x		6	-	-	3/4	6	Thru T @ 4	1.4	7.4	8.2	0.61
													Total Cir.=13.41		
Checking the circuit Δp feeding last fan coil, pipe sections 1-2-3-7															
1	0	1	x			6	-	-	3/4	6	Thru T @ 1	1.4	7.4	8.2	0.61
2	1	2	x			4	-	-	3/4	10	Thru T @ 2	1.9	11.9	4.1	0.49
3	2	4	x	x	Coil	2	-	-	1/2	14	(See segments below)			4.6	
	2	Coil	x			2	-	-	1/2	12	90° ell / Gate / Globe	19.7	31.7	4.6	1.46
	Fan	Coil			Coil	2									10.0
	Coil	4		x		2	-	-	1/2	2	Gate / Branch T @ 4	3.7	5.7	4.6	0.26
7	4	5		x		6	-	-	3/4	6	Thru T @ 4	1.4	7.4	8.2	0.61
													Total Cir.=13.41		

Notes:

DEMO: PIPE SIZING PROGRAM

All you have learned about pipe junctions and segments and arranging the data in the form, will now be used with the computer program. The next page is a typical program input screen filled in with the data from the form below - except all three circuits have been entered. Screen pop-up windows identify each number choice as the screen is filled in.

We will use the input form below to enter data into the computer. The starting and ending junctions are defined with the junction number and a description of the type of "T" associated with that junction (N or T or B).

For example, in pipe section (1) the beginning junction number is (0) and there is no "T" associated with this junction. The Input form therefore is filled in with (0 - N).

The end junction of pipe section (1) is junction (1) and there is a "T" located with junction (1). Considering the straight through "T" loss to be associated with pipe section (1) and the branch "T" loss to be associated with pipe section (4), the form is filled out as (1 - T). The "T" stands for a through loss for the ending junction (1) for pipe section (1).

Likewise the ending junction for pipe section (3) is labeled (4 - B) with the "B" standing for a branch loss at the "T".

Date: Today
Job: DES700 Demonstrator

Water Piping Design Worksheet

Name: The Piper
Sheet: 1 of 1

Sect.	Junction Begin	Junction End	Sup. (x)	Ret (x)	Other ( )	Sect. GPM	Peak GPM	Div. GPM	Pipe Size	Pipe Len.	Fittings	Fit. E.L.	Tot. E.L.	Fric. Rate	ΔP in.wg
1	0	1	x			6	-	-	3/4	6	Thru T @ 1	1.4	7.4	8.2	0.61
2	1	2	x			4	-	-	3/4	10	Thru T @ 2	1.9	11.9	4.1	0.49
3	2	4	x	x	Coil	2	-	-	1/2	14	(See segments below)			4.6	
	2	Coil	x			2	-	-	1/2	12	90° ell / Gate / Globe	19.7	31.7	4.6	1.46
	Fan	Coil			Coil	2									10.0
	Coil	4		x		2	-	-	1/2	2	Gate / Branch T @ 4	3.7	5.7	4.6	0.26
4	1	3	x	x	Coil	2	-	-	1/2	14	(See segments below)			4.6	
	1	Coil	x			2	-	-	1/2	2	Branch T @ 1 / Gate / Globe	21.7	23.7	4.6	1.09
	Fan	Coil			Coil	2									10.0
	Coil	3		x		2	-	-	1/2	12	Gate / 90° ell	1.7	13.7	4.6	0.63
5	2	3	x	x	Coil	2	-	-	1/2	4	(See segments below)			4.6	
	2	Coil	x			2	-	-	1/2	2	Branch T @ 2 / Gate / Globe	21.7	23.7	4.6	1.09
	Fan	Coil			Coil	2									10.0
	Coil	3		x		2	-	-	1/2	2	Gate / Branch T @ 3	3.7	5.7	4.6	0.26
6	3	4		x		4	-	-	3/4	10	Thru T @ 3	1.4	11.4	4.1	0.47
7	4	5		x		6	-	-	3/4	6	Thru T @ 4	1.4	7.4	8.2	0.61

Notes:

DEMO: PIPE SIZING PROGRAM

- Fill in computer input form as shown below
- All pipe junctions and sections defined for the program

Date: Today
Job: DES700 Demonstrator

Water Piping Design Worksheet

Name: The Piper
Sheet: 1 of 1

Sect.	Junction Begin	Junction End	Sup. (x)	Ret (x)	Other ( )	Sect. GPM	Peak GPM	Div. GPM	Pipe Size	Pipe Len.	Fittings	Fit. E.L.	Tot. E.L.	Fric. Rate	ΔP in.wg
1	0	1	x			6	-	-	3/4	6	Thru T @ 1	1.4	7.4	8.2	0.61
2	1	2	x			4	-	-	3/4	10	Thru T @ 2	1.9	11.9	4.1	0.49
3	2	4	x	x	Coil	2	-	-	1/2	14	(See segments below)			4.6	
	2	Coil	x			2	-	-	1/2	12	90° ell / Gate / Globe	19.7	31.7	4.6	1.46
	Fan	Coil			Coil	2									10.0
	Coil	4		x		2	-	-	1/2	2	Gate / Branch T @ 4	3.7	5.7	4.6	0.26
4	1	3	x	x	Coil	2	-	-	1/2	14	(See segments below)			4.6	
	1	Coil	x			2	-	-	1/2	2	Branch T @ 1 / Gate / Globe	21.7	23.7	4.6	1.09
	Fan	Coil			Coil	2									10.0
	Coil	3		x		2	-	-	1/2	12	Gate / 90° ell	1.7	13.7	4.6	0.63
5	2	3	x	x	Coil	2	-	-	1/2	4	(See segments below)			4.6	
	2	Coil	x			2	-	-	1/2	2	Branch T @ 2 / Gate / Globe	21.7	23.7	4.6	1.09
	Fan	Coil			Coil	2									10.0
	Coil	3		x		2	-	-	1/2	2	Gate / Branch T @ 3	3.7	5.7	4.6	0.26
6	3	4		x		4	-	-	3/4	10	Thru T @ 3	1.4	11.4	4.1	0.47
7	4	5		x		6	-	-	3/4	6	Thru T @ 4	1.4	7.4	8.2	0.61

Notes:

TYPICAL COMPUTER INPUT SCREEN

Select at 4 ft/100ft - not to exceed 2.5 ft/sec velocity.

COMPUTER INPUT SCREEN - PIPE SECTION DATA							
Section Number	1	2	3	4	5	6	7
Length (ft)	6.0	10.0	14.0	14.0	4.0	10.0	6.0
Fluid Flow (gpm)	6.0	4.0	2.0	2.0	2.0	4.0	6.0
Known Loss (ft wg)	0.0	0.0	10.0	10.0	10.0	0.0	0.0
C_V (gpm @ 1 psi)							
Start Junction (T= Thru "T")	0 - N	1 - T	2 - T	1 - B	2 - B	3 - T	4 - T
End Junction (B = Branch "T")	1 - T	2 - T	4 - B	3 - T	3 - B	4 - T	5 - N
Thru Tees (Tot)	1	2	1	1	0	2	1
Branch Tees (Tot)	0	0	1	1	2	0	0
Diameter (in)	(Do not enter any size here - let the program select the size for you.)						
Fitting Type - Quantity							
Sec. Fitting #1 (Globe)	0 - 0	0 - 0	1 - 1	1 - 1	1 - 1	0 - 0	0 - 0
Sec. Fitting #2 (Angle Globe	0 - 0	0 - 0	0 - 0	0 - 0	0 - 0	0 - 0	0 - 0
Sec. Fitting #3 (Gate)	0 - 0	0 - 0	3 - 2	3 - 2	3 - 2	0 - 0	0 - 0
Sec. Fitting #4 (90 deg El)	0 - 0	0 - 0	4 - 1	4 - 1	0 - 0	0 - 0	0 - 0
Sec. Fitting #5 (45 deg El)	0 - 0	0 - 0	0 - 0	0 - 0	0 - 0	0 - 0	0 - 0

NOTE: A lift Check Valve equals a Globe Valve

TYPICAL COMPUTER OUTPUT

The following page shows the output produced by the computer program. Note how the pressure friction loss is provided for each pipe section. If we add sections 1,4,6,and 7 together we would get (0.7 + 15.7 + 0.6 + 0.7) = 17.4 feet. Manually we calculated the loss to be 13.41 feet. The difference is caused by the computer selecting 3/8" line instead of 1/2". This happened because we set the boundary for the computer at 4 fps for ≤ 2" pipe, without also limiting the maximum pressure drop for those sizes to 10 ft./200 ft.

The output also looks at all the three circuits and picks the largest loss through the system and prints it at the bottom as "Total System Friction Head (ft wg.)". The computer shows this as 17.7 feet.

By looking at the "Balance Required" column, we can see that the one circuit is out of balance by 0.9 ft wg. The other one circuit has an overall loss of 16.8, while the other two have a loss of 17.7.

The output also reveals that the piping circuit contains 1.6 gallons of water. This is a useful piece of information when considering how much water is needed to fill the system; how heavy the system piping would be; and the size of an expansion tank.

The last two pieces of information at the bottom of the page are helpful when estimating the job. They show the linear feet of pipe by pipe size, along with the quantity and types of fitting and junction "T's" needed.

Now, follow your instructor as he activates the Carrier Pipe Selection Program, fills in the input data, and runs the calculations. Using the program is required to complete your Design Project.

TYPICAL COMPUTER OUTPUT

SIZING RESULTS

Sect. No.	Junct. From-To	Nominal Size (in)	Fluid Flow (gpm)	Fluid Velocity (ft/sec)	Equiv. Length (ft)	Frict. Loss (ft wg)	Balance Required (ft wg)
1	0 - 1	3/4"	6.0	3.6	7.4	0.7	0.0
2	1 - 2	3/4"	4.0	2.4	12.8	0.6	0.0
3	2 - 4	3/8"	2.0	3.4	37.2	15.7	0.0
4	1 - 3	3/8"	2.0	3.4	37.2	15.7	0.0
5	2 - 3	3/8"	2.0	3.4	27.6	14.3	0.9
6	3 - 4	3/4"	4.0	2.4	12.8	0.6	0.0
7	4 - 5	3/4"	6.0	3.6	7.4	0.7	0.0

Total System Fluid Volume (gal) = 1.2
Total system Friction Head (ft wg) = 17.7

ESTIMATE OF MATERIALS

NOM PIPE SIZE (IN)	PIPE LENGTH (FT)	FITTING DATA QUANTITY/FITTING TYPE
3/8	32	3-GLOBE VALVE, 6 GATE VALVE, 2-90 DEG ELBOW
3/4	32	

TEE DIMENSIONS (IN)	JUNCTIONS WHERE USED
3/4 X 3/4 X 3/8	1, 4
3/4 X 3/8 X 3/8	2, 3



DEMO: PIPE SIZING PROGRAM

- Start your computers
- Follow your instructor as he demonstrates the use of the Carrier Pipe Sizing Program
- We will enter the previous problem into the computer
- Then discuss manual versus computer calculation methods as a class

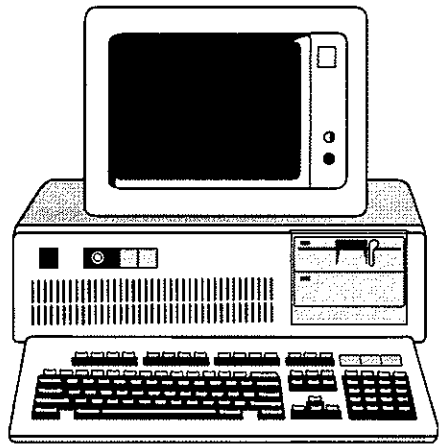

PROJECT: PIPE SIZING

We can now use the computer program to size the room fan coil piping system for the design project. The problem can be divided up into (3) separate problems:

1- Typical Fan Coil Unit:
Run the program for a typical fan coil unit with the control package you selected for your project. Consider a balance valve to be equal to a gate valve, a ball valve to be equal to a gate valve, and a control valve (2 or 3-way) to be equal to a globe valve. Also consider - for the sake of simplicity in the project - that all fan coil terminals have the same pressure loss - pick one from your previous work with the GPM schedules. Include "T" losses at both ends of the pipe section to cover connections to the supply and return headers. When you run the program for this pipe section, you will arrive at a pressure loss for the overall fan coil circuit of every fan coil terminal in the building. **Provide layout sketch.**

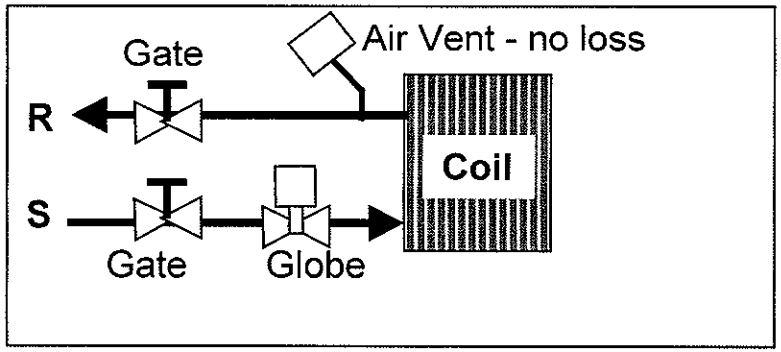

2- Typical Stack Unit Riser System:
Layout and run the program for one stack system supply and riser - consistent with your choice of direct or reverse return for the stack risers. For each pipe section that branches off to a fan coil terminal, enter the fan coil circuit loss from step (1) as a known loss. When you have done this, you will arrive at an overall pressure loss for every stack system rising vertically through the building. Also size the riser pipes converted to the ventilation air handling unit. **Provide layout sketch.**

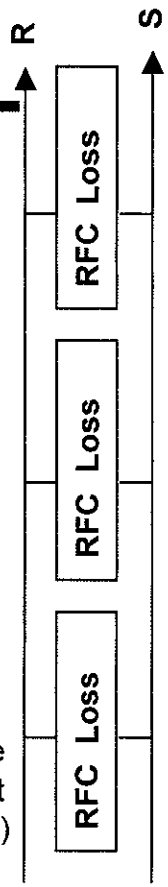

3- Supply/Return Headers:
Layout and run the program for the supply and return headers that provide chilled water to the fan coil system consistent with your choice of direct or reverse return. For each pipe section that branches off to a set of stack risers, enter the stack circuit loss from step (2) as a know loss. When you have done this, you will arrive at an overall pressure loss for the total fan coil system up to the chilled water plant. Provide a rough estimate for each of two branch circuits feeding each first floor AHU. **Provide layout sketch**

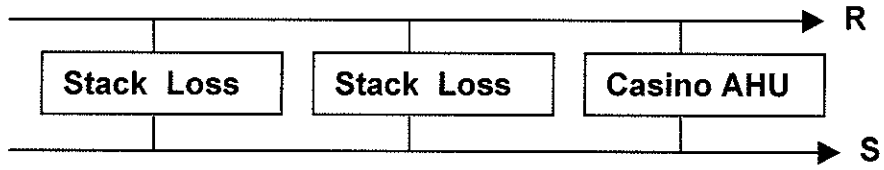

PROJECT: PIPE SIZING

Three part problem:

(1) Find typical fan coil unit loss

Assume all terminal are the same

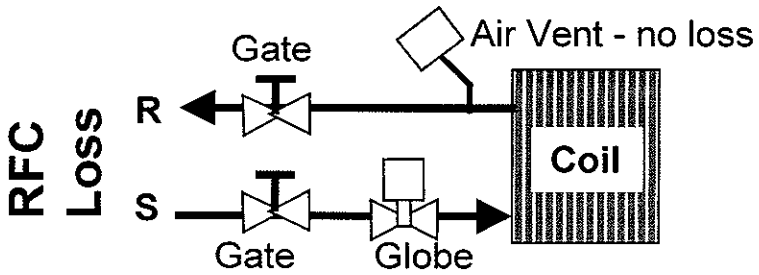

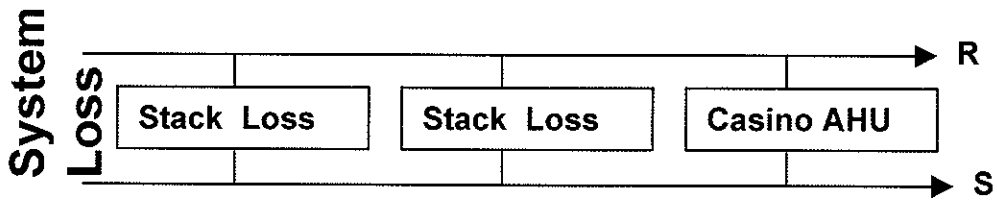

(2) Find typical stack riser loss

Assume fan coil losses are the same

Size riser for ventilation air handling unit except for one - riser supplying the ventilation unit.

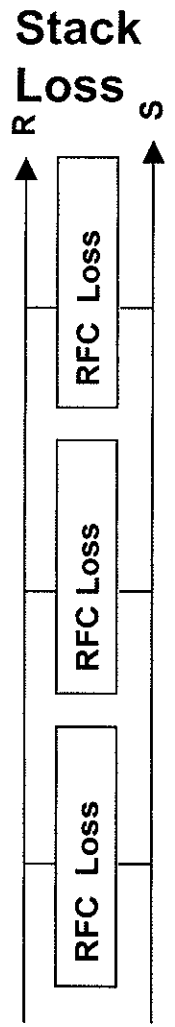

(3) Find supply & return header loss

Assume all stack fan coil losses are the same

Remember the two branches to the first floor air handlers. Use rough estimate for AHU circuit losses.

DIVERSITY

When the air conditioning load is determined for each exposure of a building, it is assumed that the exposure is at peak load. Since the sun provides a load on one exposure at a time, not all of the units on all exposures require peak GPM simultaneously. Units on the same exposure usually require maximum water flow at the same time; units on adjoining or opposite exposures do not.

Therefore, if the units are provided with "automatic" 2-way control valves, which are either 2-position or modulating, the total system water quantity actually required at any one point in time is less than the total water quantity for the peak load conditions on all exposures. This design concept is called "diversity". Water pumping and piping should be designed to take advantage of this reduced water requirement.

The principal of diversity allows the engineer to evaluate and calculate the reduced water quantity. In water piping systems, two conditions must be satisfied before diversity can be applied:

1- The water flow to the units must be automatically controlled by two-way valves.
2- Diversity may only be applied to piping that supplies more than one exposure.

The diagram at below illustrates a header layout that supplies water to four exposures.

Assuming the units supplied are automatically controlled by two-way valves, diversity may be applied to the west, south, and east exposures only. The last leg or exposure (north in this example) is never reduced in water quantity or pipe size since it must provide the peak north exposure GPM at some time during system operation.

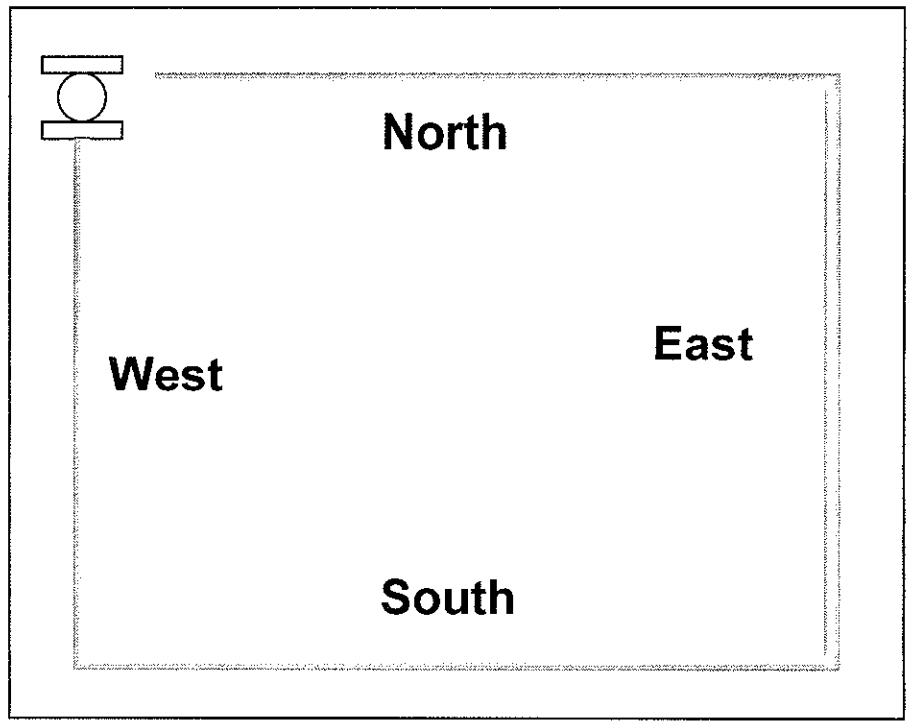

DIVERSITY

- Each exposure peaks at different time
- Less than sum of peak GPMs required at any one time
- Use diversity if:
  - Automatic 2-way valves used
  - Piping supplies water to more than one exposure
- Example:
  - North: no diversity
  - West, South, East: diversity

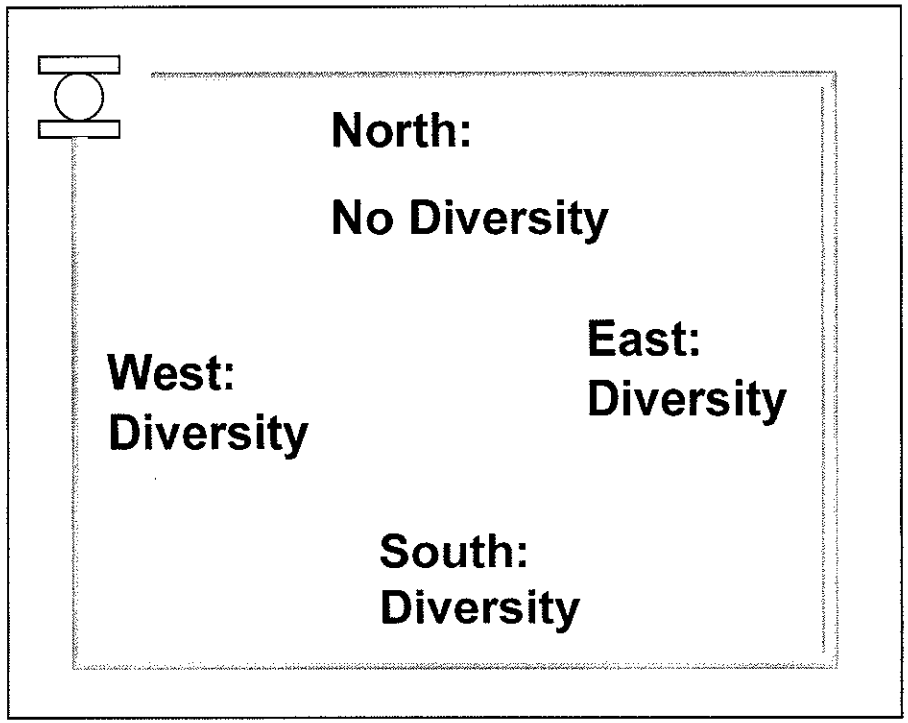

DIVERSITY CHART

The chart shown provides diversity factors to be applied to water GPM's , and therefore, piping sizes when the two conditions for diversity apply.

To use the chart, water is accumulated from the end of the pipe back to the pump as it passes through multiple exposures.

The accumulated water flow is then calculated for each exposure.

For a given exposure, the accumulated water flow of that exposure, divided by the total water flow for the pump is a ratio used to enter the chart.

For example:
We have a pipe serving two exposures - West and South. Each exposure requires 60 GPM. The total pump GPM is 60 + 60 = 120. Let's say the pump provides 120 GPM to the west zone first. The west main feeds two exposures, so it can benefit from diversity while the south main can not.

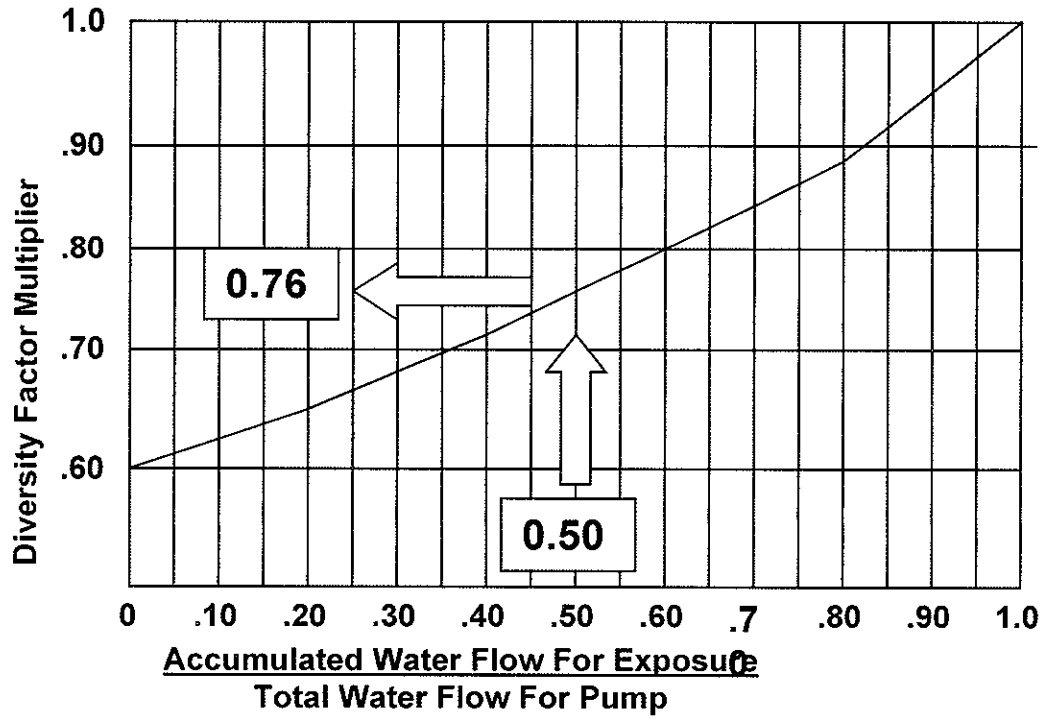

The ratio for the west zone is 60/120 = 0.50; 60 being the gallons that have been delivered (accumulated) by the time the west main is complete. Therefore, 60 is the accumulated water flow for the west exposure. The water flow in each section of pipe can be diversified by a factor of 76%.
yy

DIVERSITY CHART

- **West: (60/120) = 0.50, Diversity Factor = 0.76**

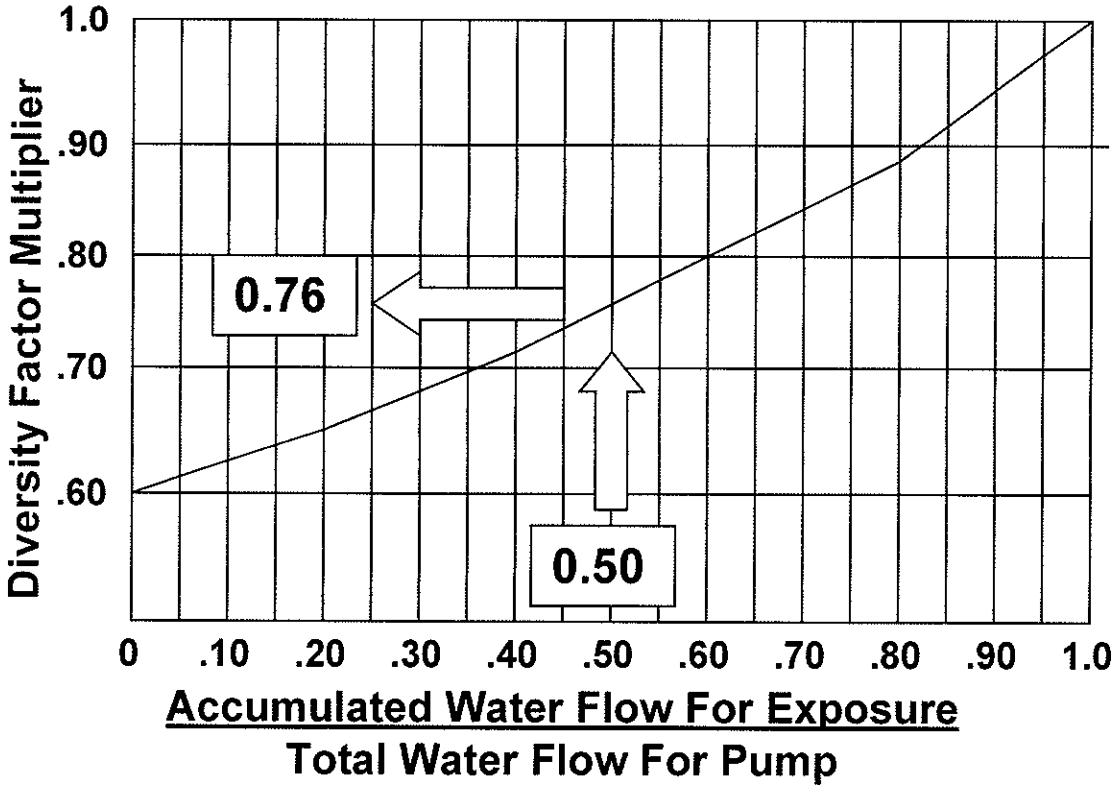

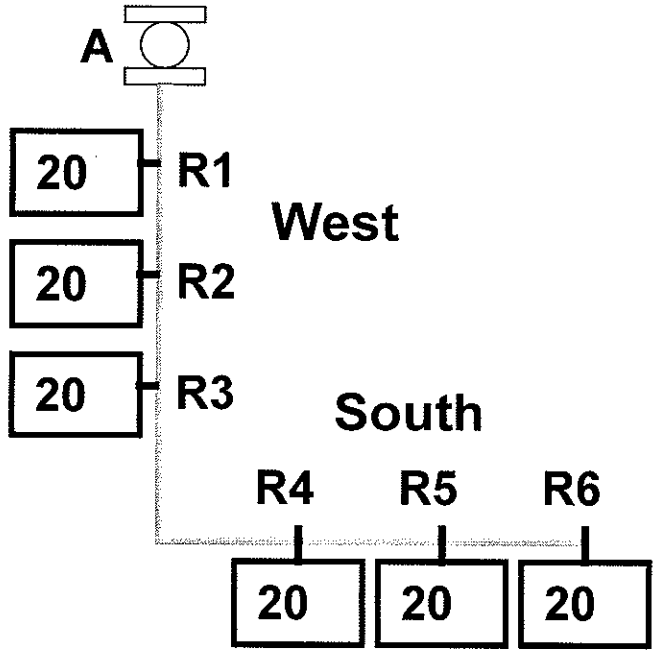

- **Let's see how the factor is used:**

DIVERSITY EXAMPLE

Given:
A building floor with two pumps. Pump A serves the west and south exposures. Pump B serves the east and north exposures. Assume automatic 2-way valves on all units.

The South and North exposures can not be diversified since they must provide maximum GPM to all units on that exposure at some points in time. The west and east exposures can be diversified since they feed more than one exposure.

Looking at Pump A, the accumulated total GPM for the west is 60. The total GPM for Pump A is 120. Entering the chart, we find the diversity factor is 0.76.

The table below shows how the diversity factor is applied at each pipe section. Pump B is the same.

PUMP A:

Section	Max GPM	Diver Factor	Design GPM
A - R1	120	0.76	91
R1-R2	100	0.76	76
R2-R3	80	0.76	61
R3-R4	60	1.00	60
R4-R5	40	1.00	40
R5-R6	20	1.00	20

PUMP B:

Section	Max GPM	Diver Factor	Design GPM
B - R7	120	0.76	91
R7-R8	100	0.76	76
R8-R9	80	0.76	61
R9-R10	60	1.00	60
R10-R11	40	1.00	40
R11-R12	20	1.00	20

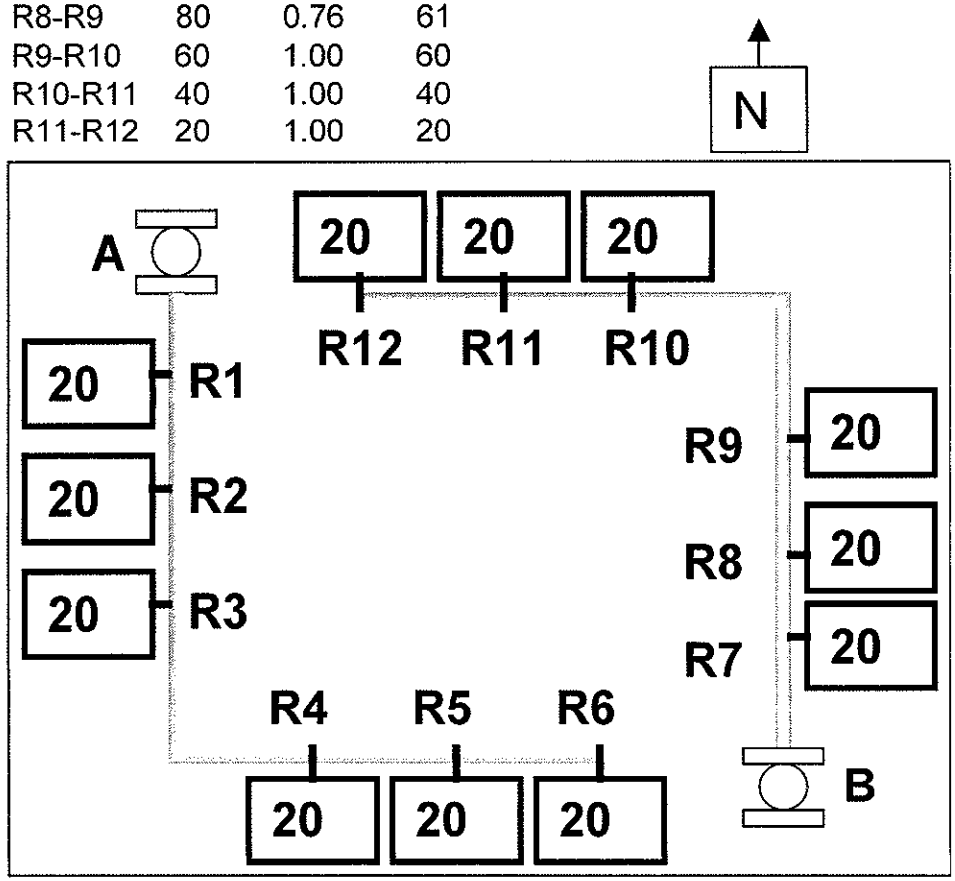

DIVERSITY EXAMPLE

West Accumulated = 60
Total pump GPM = 120
Ratio = (60/120) = 0.5
Chart Diversity Factor = 0.76

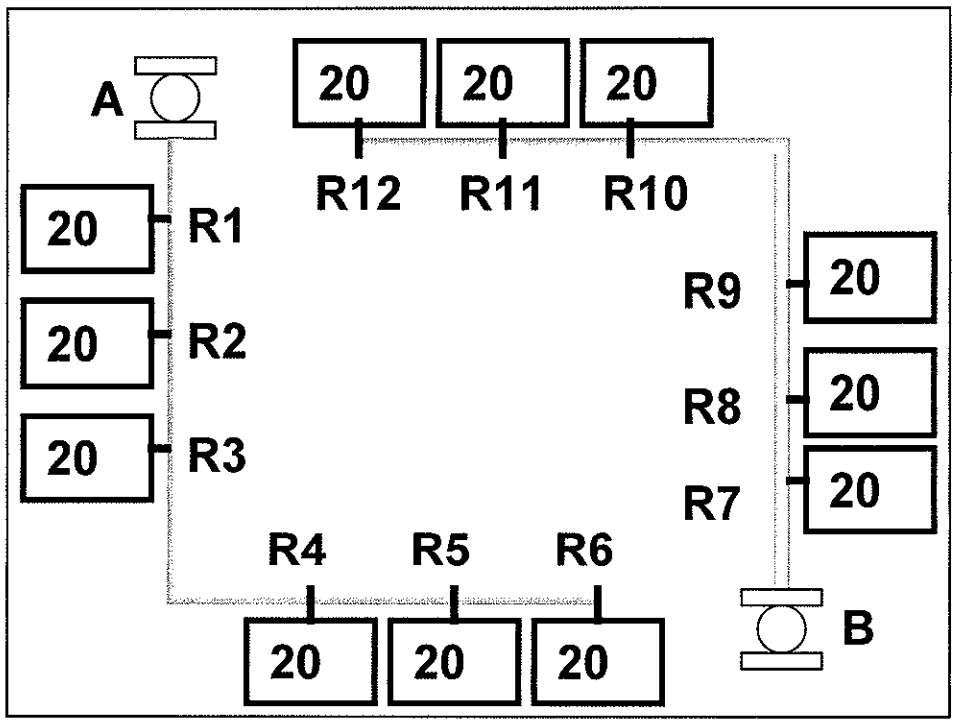

PUMP A:

Section	Max GPM	Div. Factor	Design GPM
A - R1	120	0.76	91
R1-R2	100	0.76	76
R2-R3	80	0.76	61
R3-R4	60	1.00	60
R4-R5	40	1.00	40
R5-R6	20	1.00	20

PUMP B:

Section	Max GPM	Div. Factor	Design GPM
B - R7	120	0.76	91
R7-R8	100	0.76	76
R8-R9	80	0.76	61
R9-R10	60	1.00	60
R10-R11	40	1.00	40
R11-R12	20	1.00	20

END

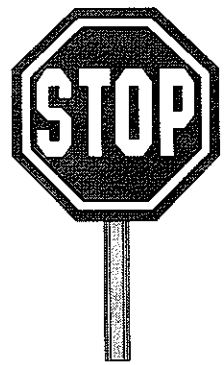

CHILLER PRINCIPLES

(Part I)

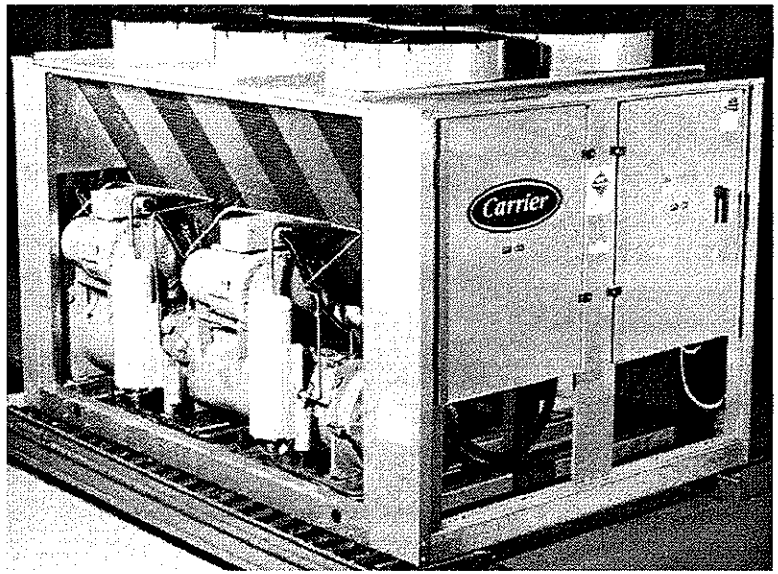

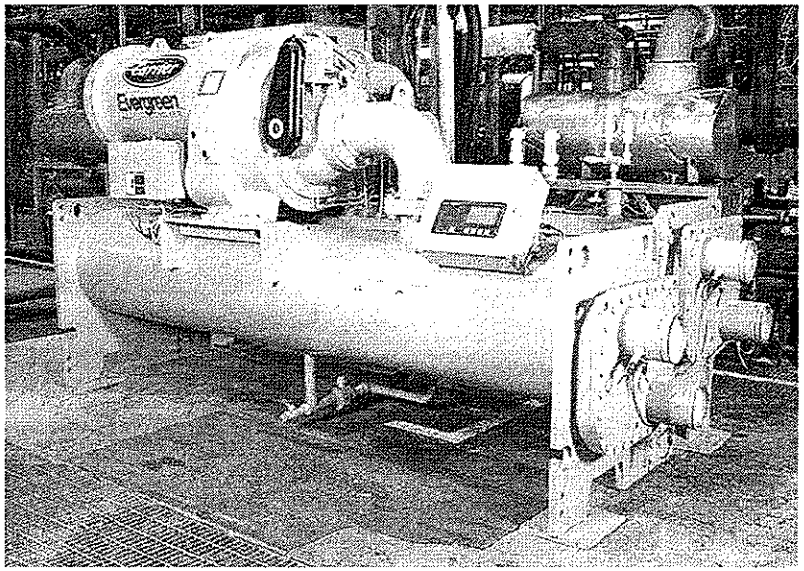

DES700

APPLIED WATER SYSTEM DESIGN

OBJECTIVES

The source of cooling for a Chilled Water System is a single or multiple set of water chillers. Understanding the choices between the variety of chillers on the market, and being able to select the correct ones for an application is essential.

This section will provide you with the basics behind water chillers ranging from 13 tons to 10,000 tons in capacity.

After this session you should be able to:

1- List the typical components of a water chiller
2- Calculate chilled and condenser water flow rates
3- Sketch a basic Refrigeration Cycle on a P-H diagram
4- List The (3) factors that influence chiller energy and size
5- Understand evaporators & their heat transfer
6- Understand condensers & their heat transfer
7- Understand head pressure control
8- Understand a Subcooler, Flasc Box, and Economizer
9- Select between Reciprocating, Screw, and Centrifugal Chillers
10- Understand chiller part load control

OBJECTIVES

- List the typical components of a water chiller
- Calculate chilled and condenser water flow rates
- Sketch a basic refrigeration cycle on a P-H diagram
- List the (3) factors that influence chiller energy and size
- Understand evaporators & their heat transfer
- Understand condensers & their heat transfer
- Understand head pressure control
- Understand a subcooler, flasc box, and economizer
- Be able to select between reciprocating, screw and centrifugal chillers
- Understand chiller part load control

DESIGN CHECKLIST STEPS

In our overall design of the Fan Coil Chilled Water System we have arrived at the selection of the water chiller or chillers. Before we jump into the selection of the chiller, we need to take a look at the type of chillers available, and the technology that drives their design. Once we understand chillers, we will be able to choose the right type, and select the equipment for the project.

DESIGN CHECKLIST STEPS

- Select control zones
- Calculate peak zone cooling and heating loads
- Select room fan coil terminals
- Select type of terminal controls
- Make piping layout
- Make condensate drain layout
- *Select refrigeration machine*
- Select auxiliary equipment

BASIC WATER CHILLER PRINCIPLES

Shown below is schematic for a typical water chiller operating with a cooling tower. The chiller is made up of seven basic components:

1- Cooler
2- Compressor
3- Condenser
4- Refrigerant expansion device
5- Oil management system
6- Control center
7- Auxiliary devices

Auxiliary devices would include motor starters, oil separators, oil coolers, receivers, economizers, etc. - which may be part of the chiller or added separately in the field.

The chillers come from the factory as either factory-assembled and wired packages, or they come in sections and are assembled in the field.

A chilled water pump circulates water through the cooler where it is typically chilled from 54F to 44 and then circulated throughout the building loads.

Using a Refrigeration Cycle the chiller adds work (heat of compression) to the heat absorbed in the cooler and rejects this total heat to condenser.

A condenser pump circulates water through the condenser picking up the cooler load and the heat of compression, and rejects this heat to a cooling tower. On a design day water typically enters the condenser at about 85F and is heated to about 95F.

The cooling tower rejects the condenser heat to the atmosphere and cools the water from 95F to 85F.

Now, let's look at how chillers are classified.

BASIC WATER CHILLERS

Commercial Chiller Types:

Air Cooled or Water Cooled

Reciprocating, Screw

Centrifugal or Absorption

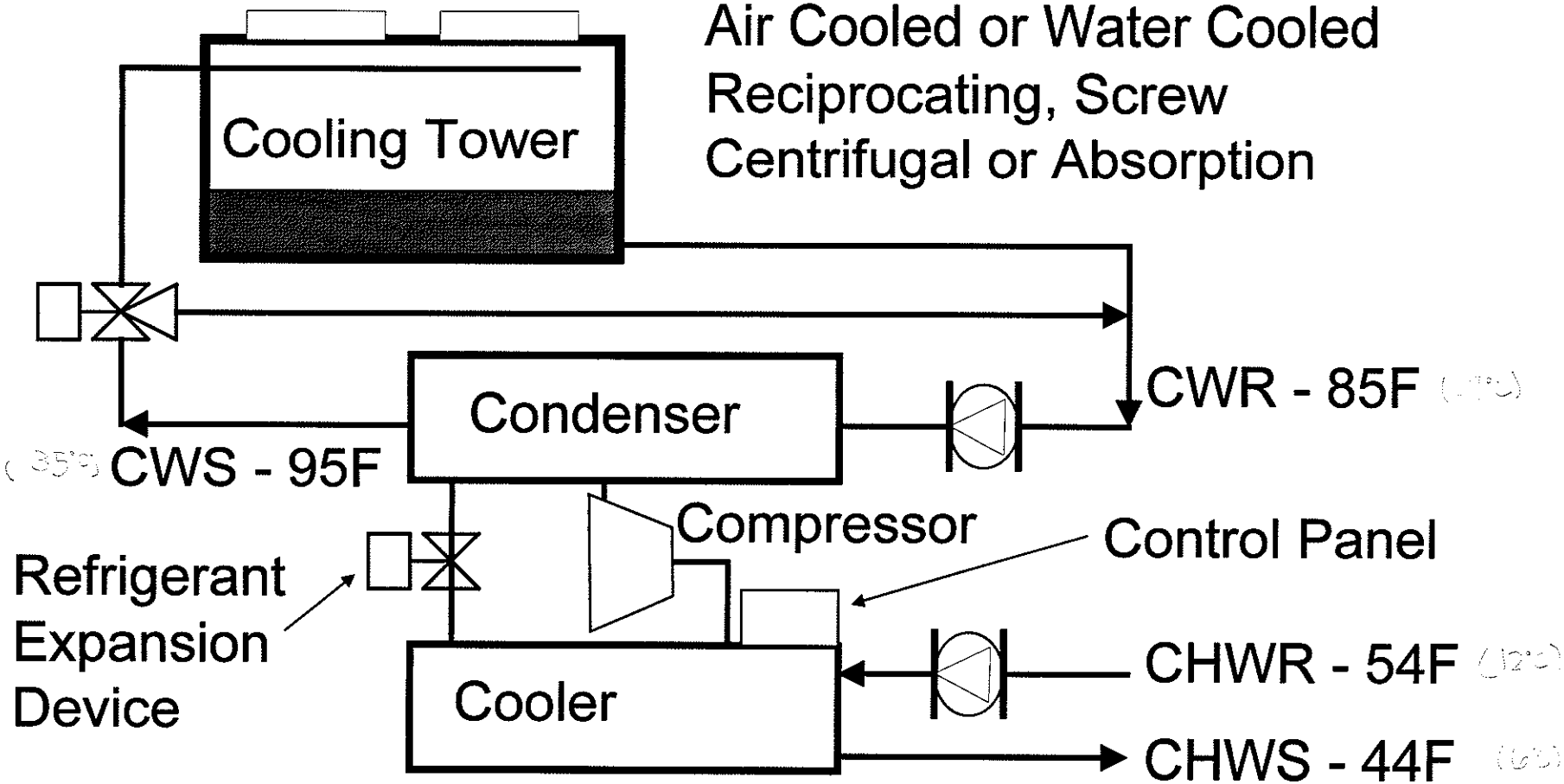

CHILLER CLASSIFICATIONS

Chillers are classified by the manner in which they reject heat, and by the means used to raise the temperature of the cooler load so it can be rejected to the atmosphere.

Heat Rejection Classifications:
Chillers have either air cooled or water cooled condensers, and are referred to accordingly as an air-cooled chiller or a water-cooled chiller.

Elevation of the Cooler Load Temperature:
The cooler load temperature is either elevated by mechanical compression means or by a chemical reaction. Compression methods include:
1- Reciprocating compressors
2- Screw compressors
3- Centrifugal compressors.

The absorption machine is also a chiller that utilizes water as the refrigerant. Salt and steam are used to absorb the cooler load and reject it to a cooling tower. More about this shortly...

The approximate capacity ranges available in the market for the various types of chillers is as follows:

Air Cooled	- Up to 250 tons
Water Cooled	- Up to 8500 tons
Reciprocating	- Up to 100 tons
Screw	- 25 to 1100 tons
Centrifugal	- 200 to 10,000 tons
Absorption	- 3 to 1500 tons

The key to understanding chiller operation is to understand the Refrigeration Cycle. Let's take a look at this cycle and how it changes with various chiller auxiliary devices.

CHILLER CLASSIFICATIONS

- **Heat Rejection Classifications:**
  - Air Cooled Chiller — Up to 250 tons
    Utilizes a refrigerant-to-air condenser to reject heat to the atmosphere
  - Water Cooled Chiller — Up to 10,000 tons
    Utilizes water and a cooling tower to reject heat to the atmosphere
- **Heat Elevation Means:**
  - Mechanical Compression:
    - Reciprocating Chiller — Up to 100 tons in size
    - Screw Chiller — 25 to 1100 tons
    - Centrifugal Chiller — 70 to 10,000 tons
  - Chemical Means
    - Absorption — 3 to 1500 tons

BASIC WATER CHILLER CYCLE

The Refrigeration Cycle:

As shown below, the P-H diagram for a refrigerant is a useful tool in visualizing the mechanical refrigeration cycle of a chiller. This basic cycle is useful in understanding how power is expended or optimized by the chiller and it's auxiliary devices. The cycle is also useful to determine required cooler and condenser water flow rates.

This is a brief review of the material covered in week one of the Commercial System Design Course, and therefore will not be done in detail. For more detail refer to the mechanical refrigeration principals section the of CSD401 course.

The schematic of the chiller on the left side of the picture below contains "call outs" that also appear on the P-H diagram at the right.

Let's begin the cycle as the liquid refrigerant leaves the condenser at (D). The liquid passes through an expansion device into the cooler. As it passes through the expansion device some liquid is vaporized (flash gas). This flash gas cools the remaining liquid and the mixture enters the cooler at (E). This is a constant enthalpy process.

In the cooler, the refrigerant absorbs heat from the chilled water - cooling the water from 54F to 44F. In the process liquid refrigerant is evaporated from (E to A) and is further superheated from (A to B). Thus, the cooler load is fully absorbed by the refrigerant. This takes place at approximately 34F Saturated Evaporator Temperature (SET).

Vaporized refrigerant now enters the compressor at (B). The compressor raises the pressure and temperature of the refrigerant by doing work on it. This work is called the Heat of Compression (H.C.), and the P-H diagram shows the increase in enthalpy due to the compression process. Superheated refrigerant leaves the compressor at (C).

The superheated refrigerant at (C) enters the condenser where it comes in contact with cooler water returning from the cooling tower. The refrigerant gives up heat to the tower water - raising the water temperature from 85F to 95F. In the process, the refrigerant is de-superheated and condensed back to a liquid from (C to D).

Thus, the condenser rejects the cooler load plus the compressor heat of rejection to the cooling tower. The more efficient the compressor, the smaller the heat of rejection will be.

Now, let's look at an example in order to determine typical cooler and condenser water flow rates.

BASIC WATER CHILLER CYCLE

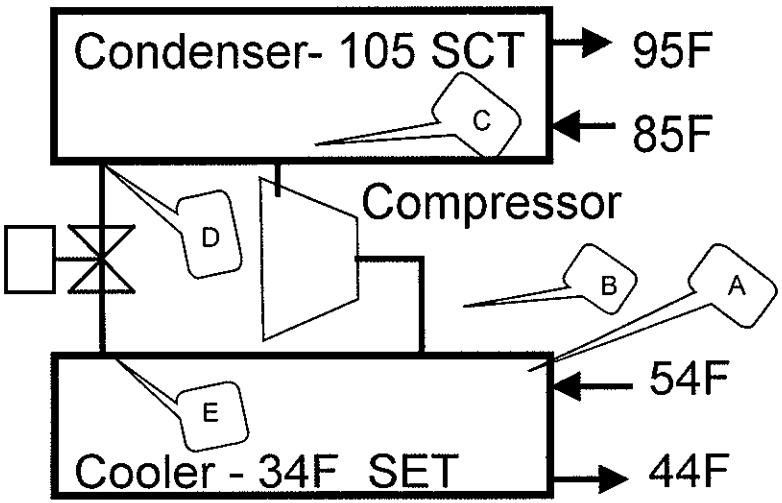

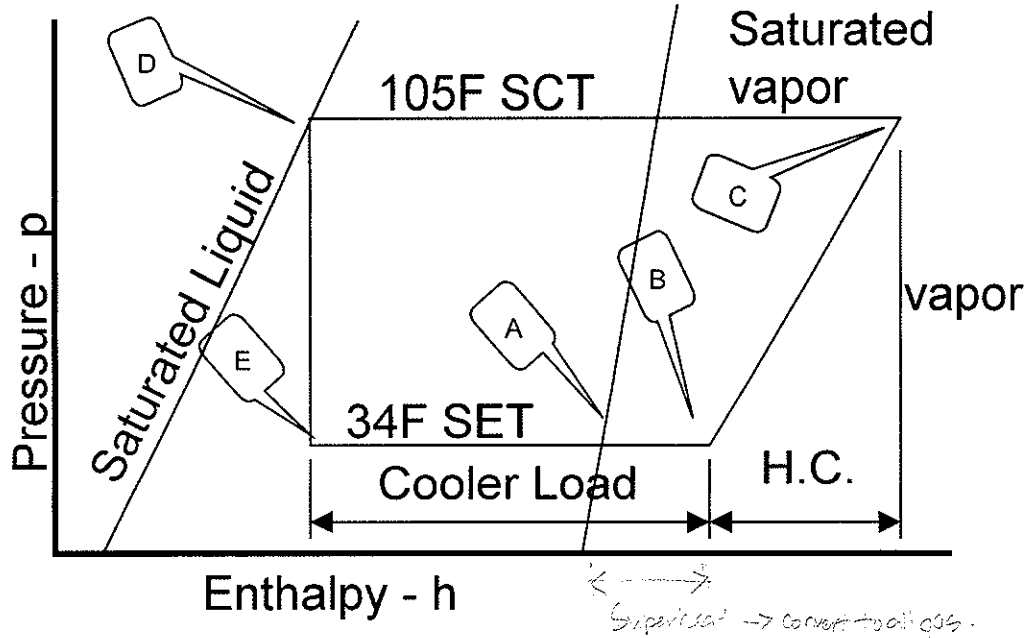

- Liquid leaves condenser (D) *throttles* to (E) at a constant enthalpy.
- Refrigerant absorbs cooler load and *evaporates* (E to A), and is *superheated* to (B).
- Compressor raises pressure and temperature from (B to C) [*Heat of Compression*]
- *Condenser Heat* = (Cooler Load + Heat of Compression)
- Refrigerant gives off condenser heat to tower water, *de-superheats*, *condenses* to (D).

DETERMINING WATER FLOW RATES

Typical Problem:
What is the required chilled water and condenser water flow rates for a 100 ton chiller, with a 10F rise in the evaporator, and a 10F drop in the tower water?

Cooler GPM = (24 x tons) / Rise
= (24 x 100) / 10
= 240 GPM

Condenser GPM = (28.8 x tons) / drop
= (28.8 x 100) / 10
= 288 GPM

The Basis of the 24 and 28.8 factors:
The chiller is rated in cooler tons (tons of refrigeration). By definition, a ton is the amount of heat required to make one ton of ice in a 24 hour period.

1 ton = (2000 lbs x 144 Btu/lb) / 24 hrs
1 ton = 12,000 Btuh

The heat transferred to or from the water can be calculated as follows:
Heat in Btuh = 500 x GPM x Rise
Since 1 ton = 12,000 Btuh
Tons x 12,000 Btuh = 500 x GPM x Rise
Tons (12,00/500) = GPM x Rise
Tons x 24 = GPM x Rise
Tons = (GPM x Rise) / 24
GPM = (24 x Tons) / Rise

If the fluid passing through the cooler is a brine, then the equation must be adjusted to reflect the specific heat and specific gravity of the brine:

Tons = (GPM x Rise x Specific Heat x Specific Volume) / 24

In the condenser, the heat of compression must be added to the cooler load in order to calculate condenser GPM. Considering an average water cooled chiller will add about 20% more energy to the cooler load, the heat to be rejected in the condenser becomes (12,000 x 1.20) = 14,400 Btuh

The equation for the condenser becomes:
Tons x 14,400 = 500 x GPM x Drop
Tons x 28.8 = GPM x Drop
Condenser GPM = (28.8 x Tons) / Drop

Note: Older chillers are less efficient and it is more common to see about 25% added to the cooler load by the compressor. Under this circumstance the above equation would become:

Condensed GPM = [(24 x 1.25) x Tons] / Drop
Condenser GPM = (30 x Tons) / Drop

Thus, the required condenser GPM varies directly with the efficiency of the compressor.

DETERMINING WATER FLOW RATES

- Chillers are rated in tons (cooler load)
- Cooler GPM:
  1 ton = 12,000 Btuh
  tons x 12,000 = 500 x cooler GPM x rise
  cooler GPM = (24 x tons) / rise
- With a 20% heat of compression:
  tons x 12,000 x 1.2 = 500 x condenser GPM x drop
  condenser GPM = (28.8 x tons) / drop
- Example: 100 ton chiller with 10F cooler rise & 10F condenser drop
  cooler GPM = (24 x 100) / 10 = 240 GPM
  condenser GPM = (28.8 x 100) / 10 = 288 GPM
- Older less efficient chillers (25% heat of compression):
  condenser GPM = (30 x 100) / 10 = 300 GPM

CHILLER ENERGY AND SIZE

The power consumed by the compressor in a Refrigeration Cycle and the ultimate chiller size is a function of three items:

1- The refrigerant mass flow being pumped by the compressor.
2- The pressure rise across which the compressor must operate (Pc - Pb). This referred to as the compression ratio or compressor lift.
3- The actual efficiency of the compressor.

In today's market place, the cost and availability of energy have become important considerations in the purchase of a water chiller. The era of cheap energy has passed. Smaller sized equipment is also being demanded to meet the rising costs of building space.

Therefore, any device or means that improves any of the above three items will lower compressor energy and reduce chiller size. Let's take a look at some of the common ways manufacturers have used to make chillers smaller and more efficient. We will start with reducing the pressure rise across the compressor.

CHILLER ENERGY AND SIZE

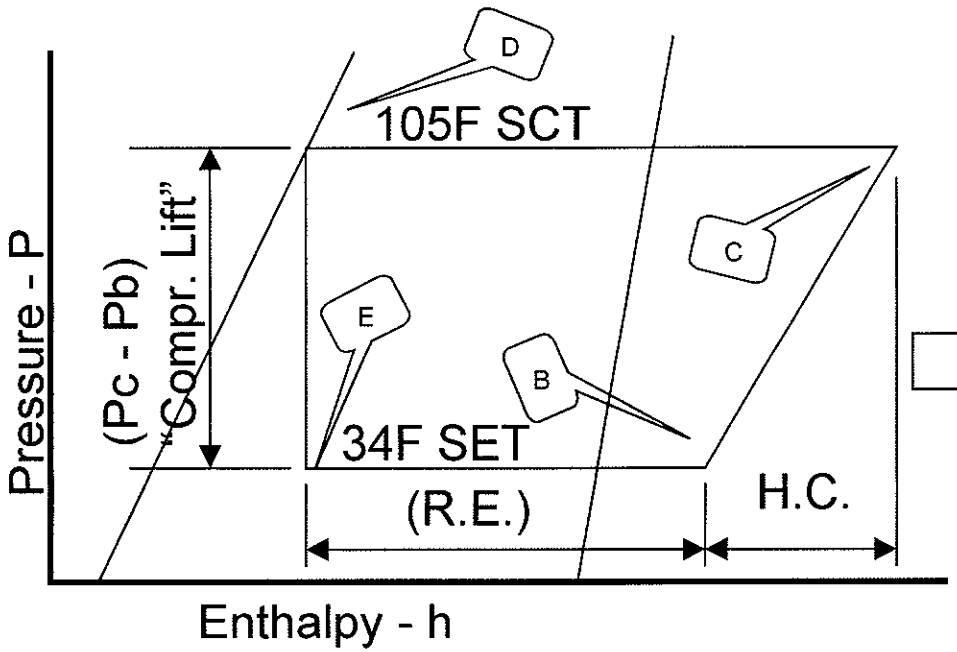

- **Refrigeration Effect (R.E.)**
- **Heat of Compression (H.C.)**
  (Compressor Efficiency)
- **Pressure Rise (Pc - Pb)**

- **The power consumed by the compressor is a function of (3) items:**
  - **Refrigerant mass flow through the compressor in lb/min (R.E.)**
  - **Pressure rise ("lift") across the compressor (pc - pb)**
  - **Compressor efficiency (heat of compression)**
- **Any device which improves any of the above three items, lowers chiller energy and/or size**
- **Let's look at reducing compressor "lift"**

REDUCING CHILLER LIFT

Compressor Lift:
Compressor lift can be defined as the pressure produced at the base of a column of refrigerant that would be equivalent to the pressure rise across the compressor. Lift is very much like the concept of feet of water when expressing water pressure.

Compressor lift can be reduced by altering two of the basic refrigeration cycle variables:

1- Increasing the Saturated Evaporator Temperature (SET) for a given chiller load.
2- Lower in the Saturated Condensing Temperature (SCT) for a given chiller load.

Chiller manufacturers employ mechanical devices and sophisticated control systems to improve the cycle in both of these areas.

Let's begin our look into chiller power improvement by taking a look at devices that increase the SET for a given load on the evaporator.

REDUCING CHILLER LIFT

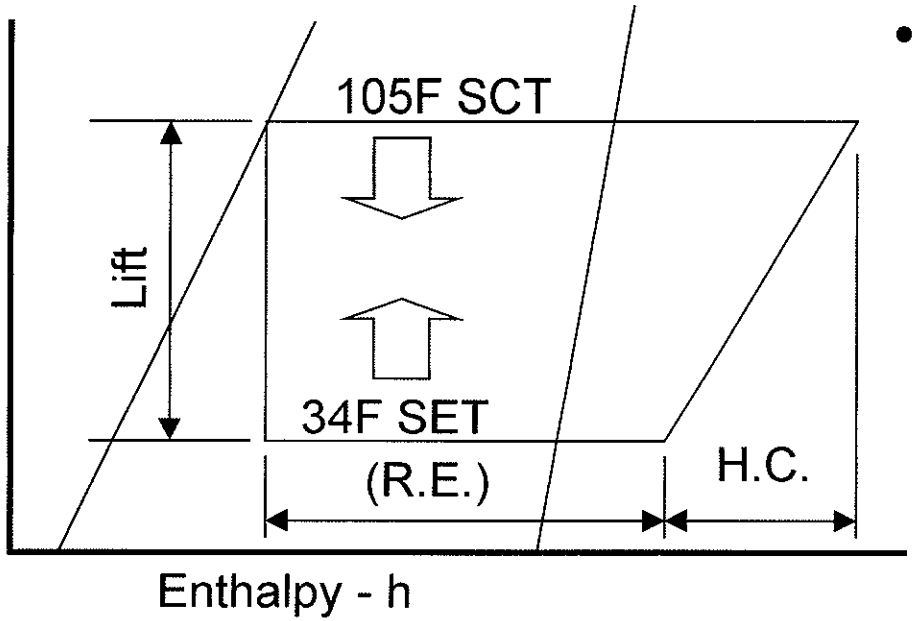

- **Ways to reduce compressor lift:**
  - **Increase the Saturated Evaporator Temperature (SET)**
  - **Decrease the Saturated Condensing Temperature (SCT)**

- **We will begin by looking at increasing the SET**

SUMMARY: INCREASING SET

The ability to increase the Saturated Evaporator Temperature of a chiller is directly related to the available options provided by the manufacture and the application options chosen by the designer.

All methods are related to the underlying heat transfer process taking place. We will take a close look at the basic evaporator heat transfer process and how it is impacted by the variables on the next page.

SUMMARY: INCREASING SET

- Manufacturer options and application choices
- Accomplished by the following:
  - Increasing the heat transfer coefficient - "U"
    - Reducing water film resistance
    - Reducing water fouling resistance
    - Reducing metal film resistance
    - Reducing refrigerant film resistance
  - Increasing heat exchanger tube surface area - A
    - Increase tube fins per inch
    - Increase number of tubes for a heat exchanger frame size
    - Increase heat exchanger frame size
    - Increase heat exchanger length
- Lets' look at the impact of each

BASIC EVAPORATOR TYPES

Evaporators are available in two basic construction types:

Flooded Design:
In this design, the water flows through the tubes and refrigerant surrounds the tubes in a "flooded" manner. The refrigerant absorbs heat from the water passing through the tubes and "boils" around the tubes.

Generally, pressure drops in excess of 15 PSI or 35 ft. wg are considered too high. Water velocities as high as 12 ft./sec. may result in pressure drops in excess of 40 FT. Velocities of 8 to 10 ft./sec. are therefore generally used.

Centrifugal chillers use flooded type designs.

Direct Expansion Design:
In this design, refrigerant flows though the tubes. The tubes pass through a number of internal baffles that are usually made out of a polypropylene material. The baffles direct the water in and up and down a path across the tubes as the water progresses through the shell from one end to the other. This provides the optimum heat transfer situation. Both the water velocity and pressure drop vary with the closeness of the baffle spacing.

Generally, pressure drops in excess of 15 PSI or 35 ft. wg are considered too high. Water velocities as high as 3 ft./sec. may result in pressure drops in excess of 40 FT. Velocities of 1 ½ to 2 ½ ft./sec. are therefore generally used.

Reciprocating and screw chillers utilize this design - both for the same reason. Both reciprocating and screw chillers pump a significant amount of oil along with refrigerant. The direct expansion type evaporator allows the oil to be swept along with the refrigerant through the inside of the tubes to a place where it can be separated and returned to the oil pump. Separation of oil with a flooded evaporator would be a much larger and more complicated problem to design around.

For either type, prime surface copper tubes are mechanically expanded into the tube sheets at either end to provide a seal between the refrigerant and water sides of the heat exchanger. Manufacturers also offer internally finned cooler tubes to enhance heat transfer. Tubes are replaceable from either end of the cooler and removable heads permit access for tube inspection.

Externally either cooler type appears as shown below. Flanged water inlet and outlet connections are provided on top of the shell. The system chilled water piping would be connected to the flanges. All external cooler surfaces are covered with a vapor barrier and ¾ inch closed cell insulation to prevent sweating in humid ambient conditions.

BASIC EVAPORATOR TYPES

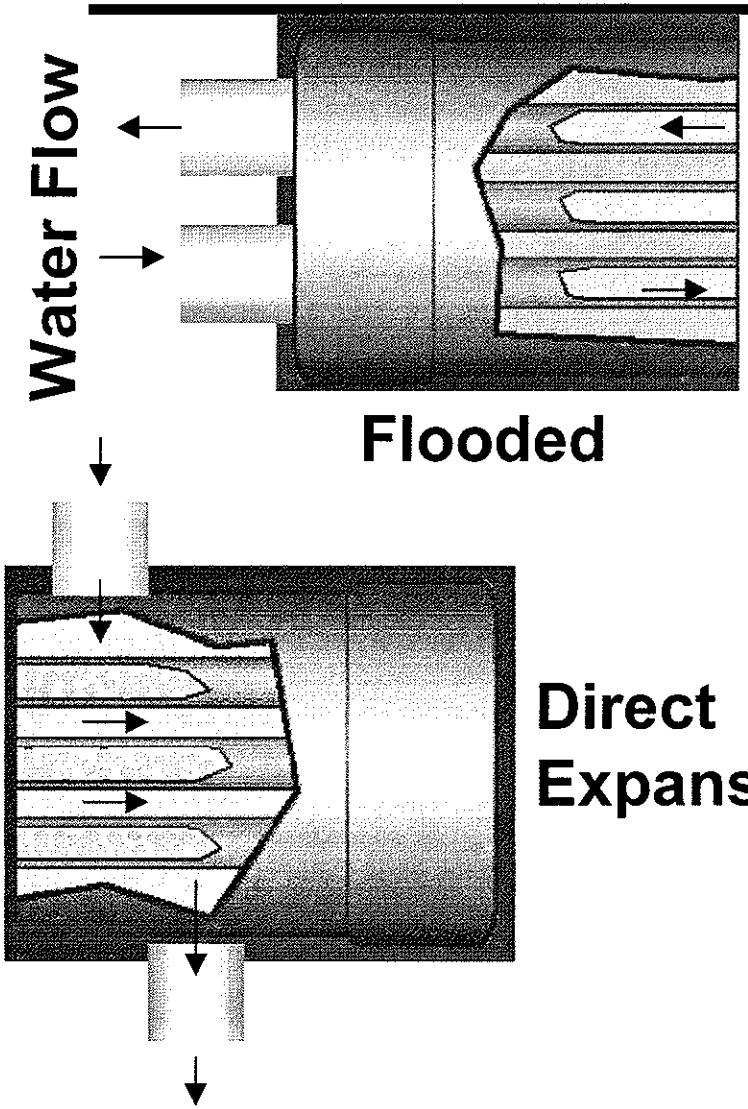

- Two types
  - Flooded
  - Direct expansion
- Flooded
  - Water flows through tubes
  - Refrigerant "floods" tubes
  - Used with centrifugals
- Direct expansion
  - Refrigerant flows through tubes
  - Water flows over tubes
  - Best oil return design
  - Used by:
    - Reciprocation machines
    - Screw machines

BASIC EVAPORATOR HEAT TRANSFER

It can be observed that there are two basic heat balances occurring in the heat exchanger. They are:

1- Heat given off by the fluid as it passes through the tubes.
2- The overall transfer of heat from the fluid in the tubes to the refrigerant in the shell.

OVERALL HEAT TRANSFER

Heat added to or subtracted from the refrigerant at a constant pressure results in a change of state of the refrigerant. The heat required to change the refrigerant state in the evaporator from a liquid to a vapor is known as the "latent heat of vaporization."

In the evaporator, this process takes place at a constant temperature (SET) corresponding to the leaving saturation pressure in the evaporator. SET is the Saturated Refrigerant Temperature. The rate at which heat transfer takes place is directly related to the entering temperature difference and the leaving temperature difference. The overall heat exchanged between the fluid and the refrigerant for either the cooler of the condenser can be expressed as:

$$Q = U \times A \times MTD$$

WHERE: Q = overall heat exchanged (Btu/hr.)
U = overall heat transfer coefficient Btu/(hr. -sq ft)
A = area of heat exchanger tubes (sq ft)
MTD = log mean temperature difference between the fluid and the refrigerant (deg F)

MTD can be expressed as follows:

$$MTD = (Q / (A \times U))$$

Thus, for the evaporator, the Saturated Refrigerant Temperature
(SET) can be calculated once MTD is determined. Clearly, the (SET) will rise if the MTD is decreased for a given evaporator load (Q).

Thus, to decrease MTD, the chiller, through either application or design of the product, must increase heat exchanger area (A) or increase the heat transfer coefficient (U).

Lets begin by taking a look at increasing the heat transfer coefficient (U).

BASIC EVAPORATOR HEAT TRANSFER

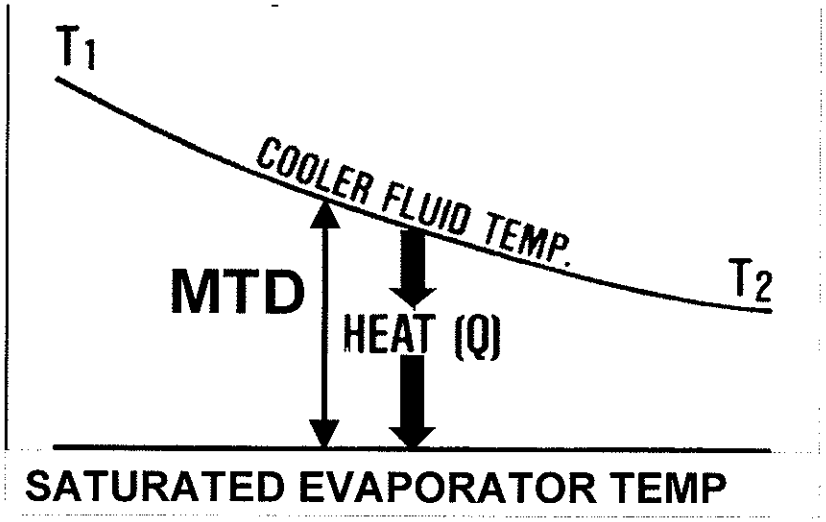

$$Q = U \times A \times MTD$$

AND

$$MTD = \frac{\Delta T_F}{\text{Loge}\left(\frac{\theta_1}{\theta_2}\right)}$$

- Chilled water flows through the evaporator
  - Enters at T1 (about 54 deg F)
  - Leaves at T2 (about 44 deg F)
- Evaporator refrigerant is boiling at SET (about 34F)
- Heat flows from water to refrigerant
- Q = U x A x MTD
  - MTD = log mean temp diff
  - U = heat transfer coefficient
  - A = evaporator area
- SET increases when MTD decreases
  - "U" or "A" must increase

INCREASING "U"

The temperature difference (MTD) between the refrigerant and the fluid in the tubes is the driving force that overcomes the resistance to heat transfer. The resistance to heat transfer is made up of four components which are related to the overall heat transfer coefficient (U).

These four resistances are:

1- Water Film resistance, which depends on the type of fluid passing through the heat exchanger as well as the fluid velocity. We will assume water for our discussion.
2- Fluid Scaling Factor, which depends on the quality of the fluid passing through the tubes.
3- Tube Wall Metal resistance, which depends on the type of material and surface configuration of the tubes.
4- The Refrigerant Film resistance, which comes from manufacturer test data and is a function of the heat exchanger design, the properties of the refrigerant used, and the geometry of the outside tube surface.

The first three resistances are variables that represent some 75-80% of the total resistance. These three resistances are within the control of those applying or selecting the heat exchangers. The following text describes the impact of these variables on the resultant required refrigerant temperature (SET).

INCREASING "U"

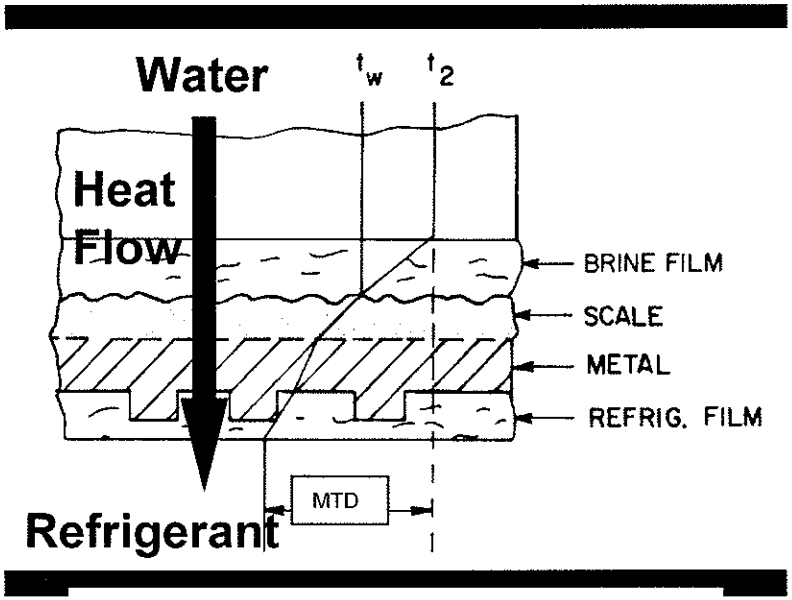

$$1/U = Rr + Rm + Rf + Rw$$

Rr = Refrigerant film resistance

Rm = Tube wall metal resistance

Rf = fouling deposits resistance

Rw = Fluid film resistance

$$Q = U \times A \times MTD$$

- Heat flows through four resistance elements
  - Water film
  - Water scaling ("fouling")
  - Metal (copper tube wall)
  - Refrigerant film
- First three represent 75% to 80% of the total
  - They are controlled by the application or design of the chiller
- Decreasing any of these four resistances will increase "U", decrease MTD, and raise SET
- Let's look at each one

WATER FILM RESISTANCE

Fluid flowing through a tube forms a static film or boundary layer, which has a zero velocity at the tube wall. This film acts as an insulator and hinders the flow of heat from the tube wall. The lower the velocity, the thicker the film, and the higher the resistance to heat flow.

Compared to a tube velocity of 10 feet per second, a tube velocity of 4 feet per second increases the water film resistance from 37% to 55% of the overall resistance to heat flow.

Also, since the overall resistance is now higher, the MTD will have to increase and the SET drop in order to transfer the same amount of heat at the lower 4 FPS velocity. The tube velocity for a given heat exchanger can normally be obtained from the manufacturer's catalog or computer ratings.

In applying a heat exchanger, the tube velocity should generally be kept between 3 and 12 FPS. Velocities less than 3 FPS result in laminar flow (thick boundary layer), which cause (R W) to increase dramatically.

The higher limit is arbitrary and is based on operation with reasonable pressure drops while simultaneously minimizing any possible tube erosion. In order for erosion to occur, an agent must penetrate the fluid layer. Agents that cause the tube damage can be chemical, mechanical, or a combination of both. Chemical agents diffuse through the fluid film to attack the tube. Mechanical agents cause damage by the impingement of entrained gas bubbles or suspended material against the tube wall. Tests conducted by Carrier Research Division show that fluid velocity in itself does not cause tube damage. However, if the fluid does contain attacking agents, the increased fluid velocity will increase the rate of attack. Without such agents in the fluid, no damage is sustained—even with fluid velocities as high as 24 FPS.

Pressure drop, on the other hand, increases as the square of the velocity. The higher the velocities, the higher the fluid pumping costs.

Selection of a design velocity should include an economic evaluation. Heat transfer efficiency increases proportionally to the velocity to the 0.8 power, and a larger velocity may result in the use of a smaller—less costly heat exchanger. However, this must be balanced against the higher pumping cost associated with higher velocities.

WATER FILM RESISTANCE

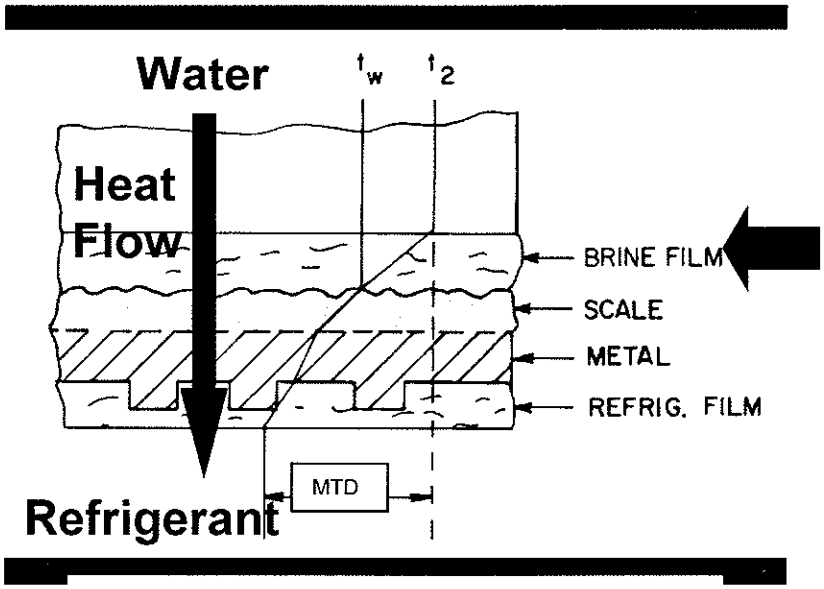

$$1/U = Rr + Rm + Rf + Rw$$

Rr = Refrigerant film resistance

Rm = Tube wall metal resistance

Rf = fouling deposits resistance

Rw = Fluid film resistance

$$Q = U \times A \times MTD$$

- The water film resistance decreases directly with an increase in water velocity
  - Less than 3 fps: laminar flow
  - Rapid rise in R_M
  - Greater than 12 fps
  - Erosion problems
  - Target (3 fps < velocity , 12 fps)
- Pressure drop rises as the square of tube velocity
- Influences on water velocity
  - Tube cross sectional area
  - Number of water passes

NUMBER OF PASSES

Tube velocity is determined by the equation:

V = ((GPM/k) x (N/2))

WHERE: GPM = fluid flow rate (gal/min)

N = number of heat exchanger passes

K = velocity factor

The velocity factor (k) is constant for each heat exchanger size and is a function of the area of the tubes through which the fluid enters.

Pass arrangements can be increased or decreased to raise or lower the tube velocity. For example: 120GPM flowing through a heat exchanger with a (k) factor of 10 would have tube velocities of 6, 12, and 18 FPS for 1, 2, and 3 pass arrangements respectively. The velocity increases with higher passes because the area through which the water flows decreases.

Due to the arbitrary nature of the upper limit on tube velocity, a practical application approach is to specify reasonable pressure drop limits (15 to 30 feet wg) and allow heat exchangers to be selected up to the 12 FPS limit as long as the pressure drop limits are met. This approach would assure reasonable operating costs, minimal erosion problems, and still allows low first cost heat exchangers to be selected.

NUMBER OF PASSES

$$VEL = \frac{GPM}{K} \times \frac{N}{2}$$

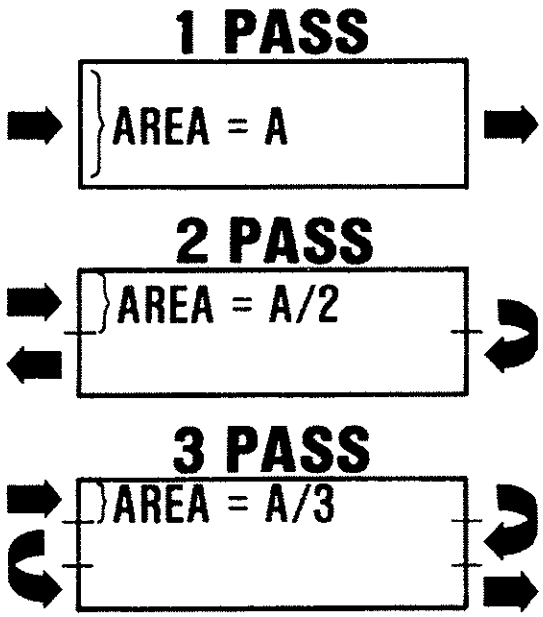

$$V = \frac{120}{10} \times \frac{N}{2}$$

- Tube velocity varies with:
  - Evaporator GPM
  - Number of passes (N)
  - K is constant relating to cross sectional area of the tubes
  - Lets assume a K of 10 and a GPM of 120
- For a (1) pass evaporator
  - Vel = [(120/10) x (1/2)] = 6 fps
- For a (2) pass evaporator
  - Vel = [(120/10) x (2/2)] = 12 fps
- Choose max no. of passes within reasonable pressure drop limits
  - (15 ft wg to 30 ft wg)

SCALING RESISTANCE

Fouling is the build up of scale deposits on the surface of heat exchanger tubes as minerals or suspended materials in the fluid precipitate out. Fouling begins as soon as the heat exchanger is placed in operation. Fouling is expressed as a numerical value (.0005).

The percentage that the fouling represents of the overall resistance increases as the fouling increases. At 0.0005 the fouling represents 39% of the overall resistance. At .002 this would rise to 72%.

With a rise in fouling, the overall heat transfer coefficient (U) will decrease. Thus, the temperature driving force (MTD) must increase in order for the heat exchanges to transfer the same amount of heat (Q). The end result is a decrease in the Saturated Evaporator Temperature.

The degree of fouling and buildup of scale deposits depends upon the quality of the fluid circulating through the tubes, and the amount and nature of any material it may have in suspension. The application of the proper fouling factor in the selection of heat exchangers is important and must be evaluated individually for every job. Determine the proper fouling factor for each job.

Large sized heat exchangers will be required to handle high fouling factors, and thus will increase the first cost of the chiller. On the other hand, equipment selected on the basis of small fouling factors when conditions dictate otherwise, will more than likely result in capacity deficiencies and possibly surge problems.

The evaporator is typically part of a Closed Water Circuit and thus not subject to much fouling. The American Refrigeration Institute, a self regulating industry organization, has established 0.00025 as the standard fouling factor for evaporators for the purpose of establishing chiller ratings. In the final analysis, it will be up to the consulting engineer working with a water treatment specialist to establish the final value for fouling to be used for the evaporator in a given application.

SCALING RESISTANCE

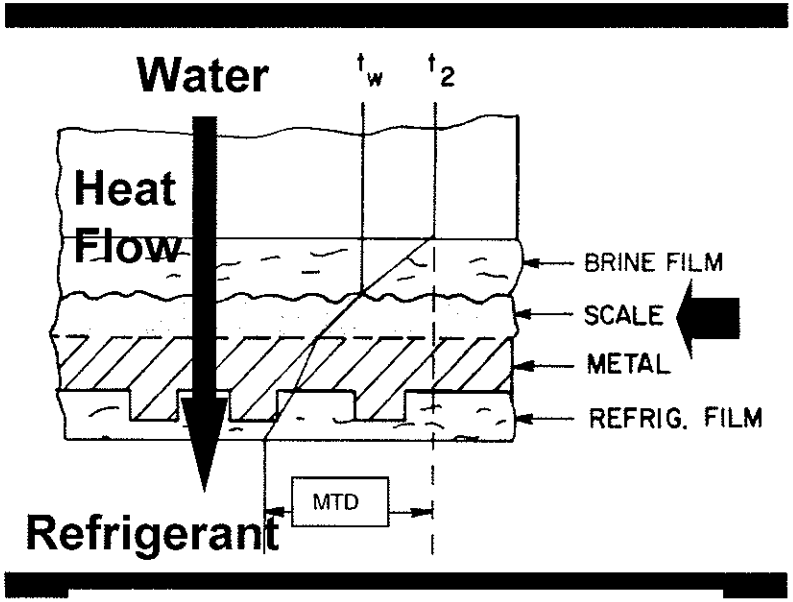

$$1/U = Rr + Rm + Rf + Rw$$

Rr = Refrigerant film resistance

Rm = Tube wall metal resistance

Rf = fouling deposits resistance

Rw = Fluid film resistance

$$Q = U \times A \times MTD$$

- Fouling is the build-up of deposits on tube surface
  - Depends on quality of water
  - Dirty river, clean water, etc.
- Expressed as a number (0.00025 or 0.0005 or 0.002)
- At 0.005 this represents 39% of overall resistance
- Minimal in evaporators
  - Closed piping circuit
- ARI sets at 0.00025
  - Basis of chiller ratings
- Consulting engineer sets for specific job

METAL WALL RESISTANCE

Manufacturers can select chillers based on the use of any number of materials ranging from the commonly used copper to an exotic type like titanium. Metal resistances vary greatly and can greatly impact machine size and horsepower requirements.

For example, compared to copper tubes, the impact on heat flow caused by the use of 70-30 cupro-nickel tubes is an increase in the metal resistance from 2% to 23% of the overall resistance. The overall increase in resistance causes an decrease in Saturated Evaporator Temperature.

Typically, copper tubes are used in an evaporator, which is part of a closed piping circuit. Rarely will any other type of material be used in an evaporator.

COMPRESSOR EFFICIENCY

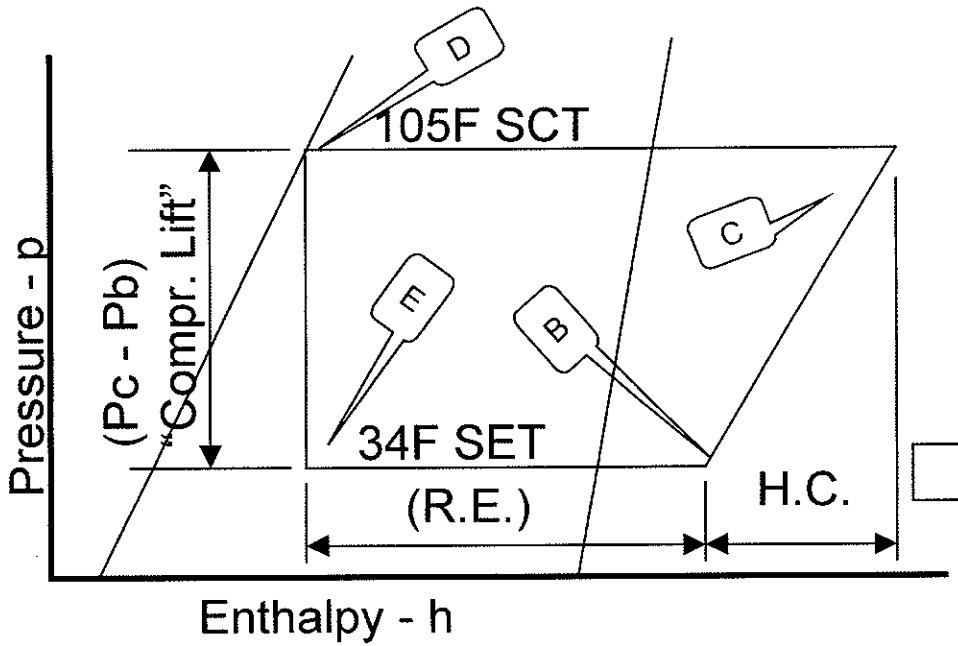

- **Refrigeration Effect (R.E.)**
- **Heat of Compression (H.C.)**
  (Compressor Efficiency)
- **Pressure Rise (Pc - Pb)**

- **The power consumed by the compressor is a function of (3) items:**
  - **Refrigerant mass flow through the compressor in lb/min (R.E.)**
  - **Pressure rise ("lift") across the compressor (Pc - Pb)**
  - **Compressor efficiency (heat of compression)**
- **Any device which improves any of the above three items lowers chiller energy and/or size**
- ***Let's look at compressor efficiency***

COMPRESSOR EFFICIENCY

Obviously, the mechanical design of the compressor is the major factor contributing to it's efficiency. Tolerances, friction losses, and materials all have to be designed properly.

However, the refrigerant conditions entering the compressor affect the compressor efficiency, and this is controlled by devices outside the design parameters of the compressor.

All compressors are designed to pump vapor and not liquid refrigerant. To insure that vaporized refrigerant reaches the compressor inlet and not liquid, traditionally a thermal expansion valve (TXV) was used on positive displacement compressors. Because of its mechanical control, a traditional 15 F of superheat was maintained by the valve.

As can be seen on the P-H diagram below, increasing the superheat causes the specific volume (ft^3 / pound) of the refrigerant gas to increase. This means that each pound of refrigerant now occupies more space.

Since compressors are pumping volumes of refrigerant, each cubic foot of refrigerant passing through the compressor will be less dense at higher superheats. The mass flow (pounds/minute) of refrigerant being pumped by the compressor will drop.

Clearly, the compression cycle has become less efficient as the superheat is increased.

Again, modern electronics offers a solution. Carrier has designed an electronic expansion valve that provides extremely fine and precise control of refrigerant flow to the evaporator. When coupled with sensors and a microprocessor, more precise control of superheat can be maintained. Instead of the traditional 15 F of superheat, chillers now operate with 5 F of superheat - without sacrificing compressor safety.

Now let's turn our attention to the type of compressors utilized in chillers. What kinds are used commercially? What capacity ranges are they offered in? Why use one versus another? We will explore these questions next.

METAL WALL RESISTANCE

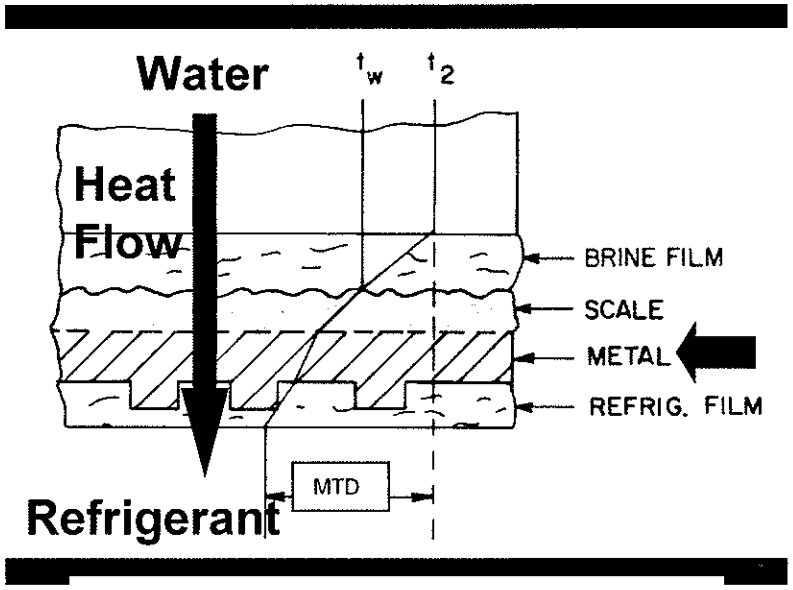

$$1/U = Rr + Rm + Rf + Rw$$

Rr = Refrigerant film resistance

Rm = Tube wall metal resistance

Rf = fouling deposits resistance

Rw = Fluid film resistance

$$Q = U \times A \times MTD$$

- Copper normally used in an evaporator
  - Closed piping circuit
- Rarely any other materials used
- Impact of 70-30 copper nickel tubes
  - Copper: 2% of total resistance
  - 70-30 copper/nickel tubes: 23% of total resistance
- Engineers will select material to fit the application

REFRIGERANT RESISTANCE

We shall now consider the resistance due to the refrigerant film in light of recent technological improvements in this area. The heat transfer coefficient of boiling or condensing refrigerant is several times less than that of water flowing through tubes. Therefore, the outer surfaces of the tubes are usually finned by rolling grooves in the tubes on the surface. The net result is the increased surface area is about 4 or 5 times the internal surface of the tube. This extra area reduces the heat transfer flux (Btu/sq ft), and reduces the refrigerant film resistance.

High performance tubing (increased fins per inch) reduces this heat flux even further. In addition, it has been found that bending over the tips of the fins dramatically reduces the refrigerant film. Other surface configurations also have a dramatic effect, and manufacturers are now taking advantage of this phenomenon by making this tubing available in their standard lines of machines.

REFRIGERANT RESISTANCE

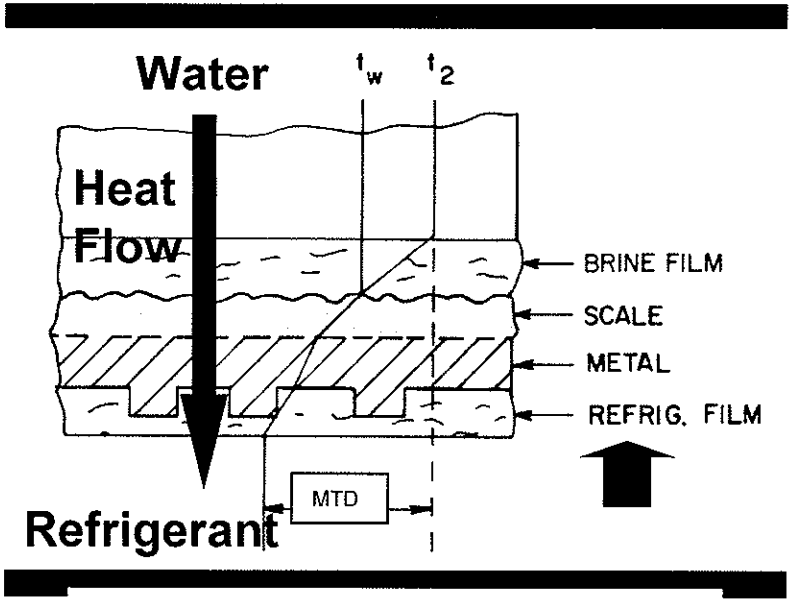

$$1/U = Rr + Rm + Rf + Rw$$

Rr = Refrigerant film resistance

Rm = Tube wall metal resistance

Rf = fouling deposits resistance

Rw = Fluid film resistance

$$Q = U \times A \times MTD$$

- Refrigerant film is smallest resistance of the four
- Boiling resistance reduced by use of:
  - Increased fins / inch on tubes
  - Bending over fin tips
  - Roughening tube surface
- Several options made available by manufacturers

INCREASING SURFACE AREA

Of all the variables that impact a rise in SET, increasing the heat transfer area is the one most under the control of the person applying and selecting the chiller.

Area can be increased in four ways:
1- Use higher tube fins per inch
2- Use a larger number of tubes within a heat exchanger frame size
3- Use a larger heat exchanger frame size
4- When available, use a longer heat exchanger

Some chillers provide flexibility in all four areas, others are limited. Whatever choice you have, it is evident that more heat transfer surface in the evaporator will increase the SET and improve machine performance.

Simply be aware of what the manufacturer offers and decide on the options as needed.

INCREASING SURFACE AREA

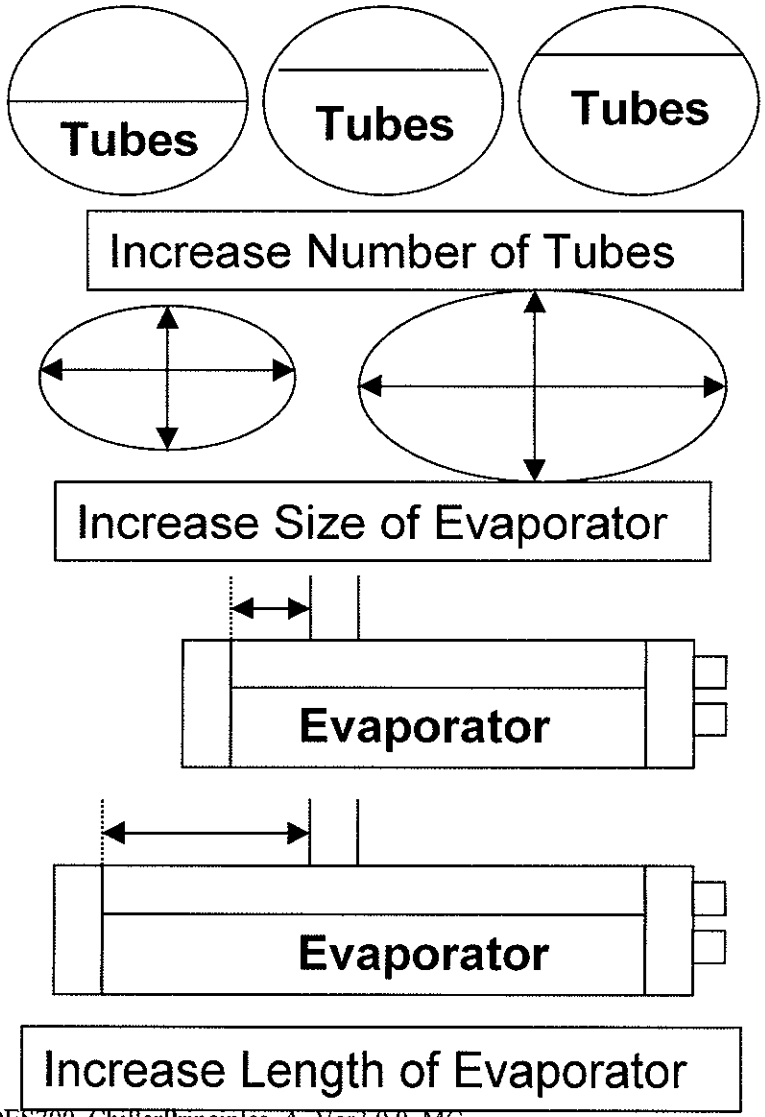

- Greatly controlled by the selection of a chiller
- Ways of increasing tube surface area:
  - Higher fins per inch
  - Larger number of tubes
  - Larger size heat exchanger frame
  - Increased heat exchanger length
    - Higher pressure drops
- All methods reduce MTD and cause increase in SET

SUMMARY: REDUCING SCT

Reducing the Saturated Condensing Temperature of a condenser is impacted by the same factors as heat transfer we have already studied about when we looked at evaporators:

1- Increasing the heat transfer coefficient - "U"
2- Increasing the heat exchanger surface area.

In addition, the condenser allows another factor to be considered

3- Lower the condensing fluid temperature

Let's take a look at these factors in more detail.

SUMMARY: REDUCING SCT

- Manufacturer options and application choices
- The same methods used with evaporators:
  - Increasing the heat transfer coefficient - "U"
  - Increasing heat exchanger tube surface area
- Specific to condensers:
  - Lowering condensing fluid temperature
- Lets' look at these in more detail

BASIC CONDENSER TYPES

Condensers are available in two basic designs:

Water Cooled:

In a water cooled design, hot refrigerant gas from the compressor condenses on the shell side of the tubes while water is circulated through the tubes. Externally finned copper tubes are mechanically expanded into the tube sheets at either end to provide a seal between the refrigerant and water sides of the heat exchanger. Tubes are replaceable or cleanable from either end of the condenser by removing the bolted on heads.

Unlike the cooler, the condenser is almost always used in an open water circuit like a cooling tower. Sometimes a once through water source like a river, lake, well, or city water is used. The available water temperature varies depending on the source and the season of the year.

Consequently, the inside of the tubes is continually subject to the build up of scale which must be periodically mechanically cleaned by brushing. Like the cooler, pressure drops in excess of 35 ft. wg are considered too high.

Water velocities are maintained between 3 ft./sec. and 12 ft./sec. to minimize pressure drop and tube erosion due to entrained particles in the water.

Generally, a cooling tower is used with water entering the condenser at 85 F and leaving the condenser at 95 F. This usually results in a SCT of about 105 F.

All types of chillers utilize water cooled condensers - reciprocating, screw, and centrifugal.

Air Cooled:

In an air cooled design, refrigerant flows through the tubes which are equipped on the outside with mechanically bonded plate fins. Ambient air is passed over the tubes by condenser fans. Typically, the air enters at 95F and leaves at 105F. The typical SCT would be around 125 F - higher than what is normally experienced with a water cooled design.

Reciprocating and screw chillers utilize air cooled condensers - not centrifugal chillers.

Reciprocating and screw chillers are likely candidates to utilize air cooled condensers because they are "positive" displacement machines and can readily operate at higher compression ratios. Centrifugal chillers are much more sensitive to higher compression ratios and not normally applied with air cooled condensers.

BASIC CONDENSER TYPES

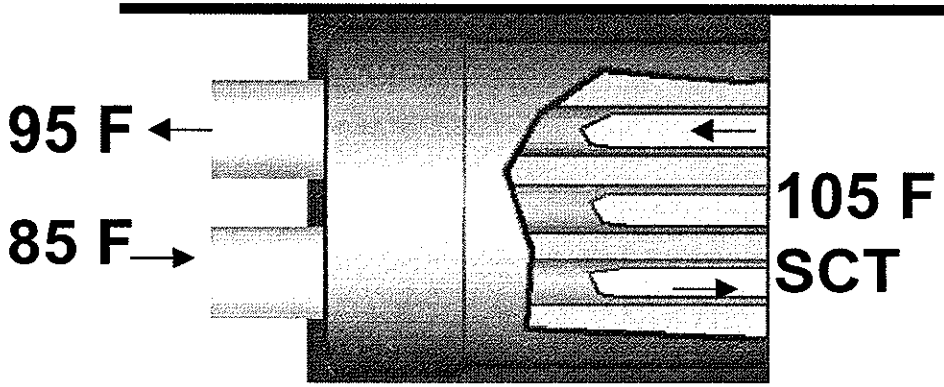

Water Cooled

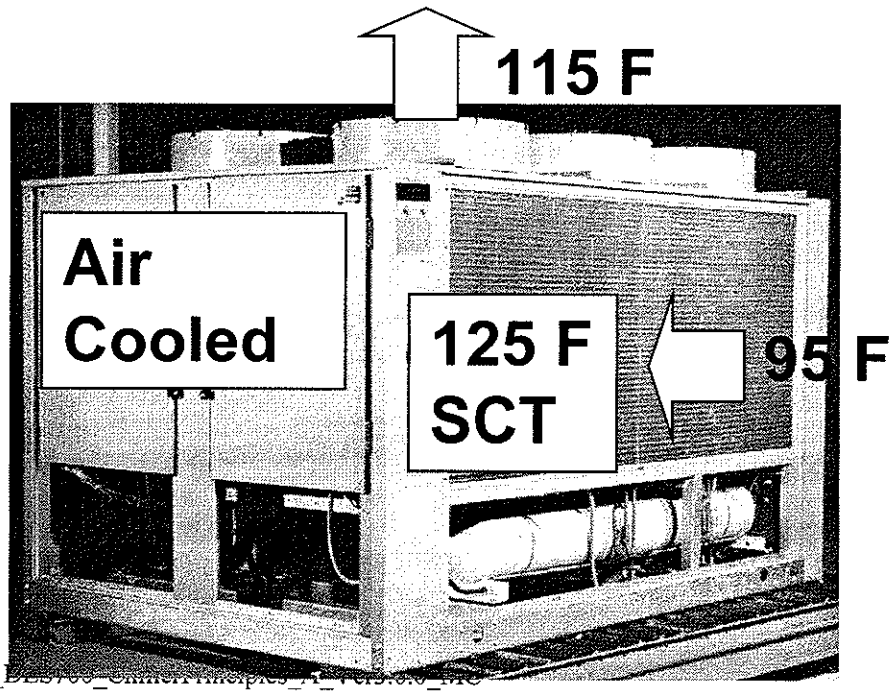

- Two types
  - Water cooled
  - Air cooled
- Water cooled
  - Flooded design
  - Cooling tower
  - Once through water source
  - 85 to 95 deg F rise typical
  - 105 deg F SCT normal
  - All types of chillers
- Air cooled
  - Uses ambient air
  - 95 to 115 deg F entering usual
  - 125 deg F SCT normal
  - Reciprocating and screw

BASIC CONDENSER HEAT TRANSFER

In a basic water cooled condenser, the tower water flows through the condenser tubes. The water typically enters at about 85 F from the tower and heats up to about 95 F as it passes through the condenser.

The refrigerant gives up heat to the water - condensing from a vapor into a liquid as it does. The condensing process takes place at a Saturated Condensing Temperature (SCT) of a about 105 F.

The same heat transfer equations apply to the condenser that applied to the evaporator:

$Q = U \times A \times MTD$

Reducing the condenser MTD will result in a lower SCT. In order to decrease the condenser MT,D the heat transfer coefficient ("U") or the heat exchanger surface area (A) must be increased. This is exactly the same requirements we had for the evaporator earlier in this text.

BASIC CONDENSER HEAT TRANSFER

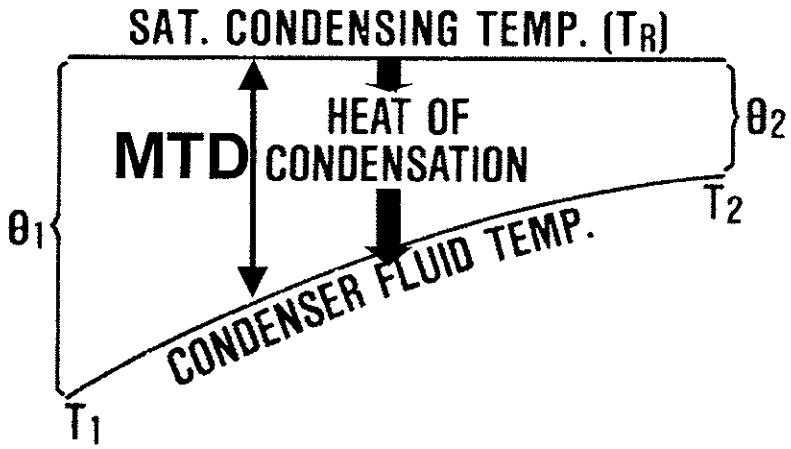

$$Q = U \times A \times MTD$$

AND

$$MTD = \frac{\Delta T_F}{\text{Loge}\left(\frac{\theta_1}{\theta_2}\right)}$$

- Tower water flows through the condenser
  - Enters at T1 (about 85 deg F)
  - Leaves at T2 (about 95 deg F)
- Refrigerant is condensing at SCT (105 F)
- Heat flows from refrigerant to the water
- Just like evaporator
  - Q = U x A x MTD
- SCT decreases as MTD decreases
  - "U" or "A" must increase

INCREASING "U" AND AREA

All that we have said regarding increasing the condenser "U" heat transfer coefficient and the heat exchanger area apply equally as well to the condenser.

One factor however, stands out more significantly when considering a condenser - the water side fouling resistance. Condensers use an Open Piping System and are supplied with water from a cooling tower, lake, river, etc. All these sources tend to build up a scale on the condenser tubes over time and the condenser must be periodically cleaned.

Thus, not only will the scale increase with time, but many applications require the use of special tubes like copper nickel; or stainless steel which offer higher metal resistances.

When considering the increase in condenser area, the same principles as discussed under evaporators also apply for water cooled chillers. For air cooled chillers an increase in chiller size is normally the only way to increase condenser area due to the packaged type of designs offered by the manufacturers.

INCREASING "U" AND AREA

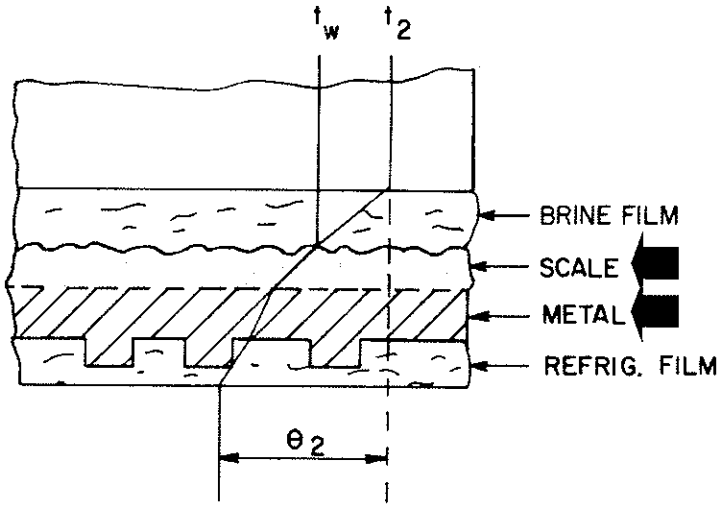

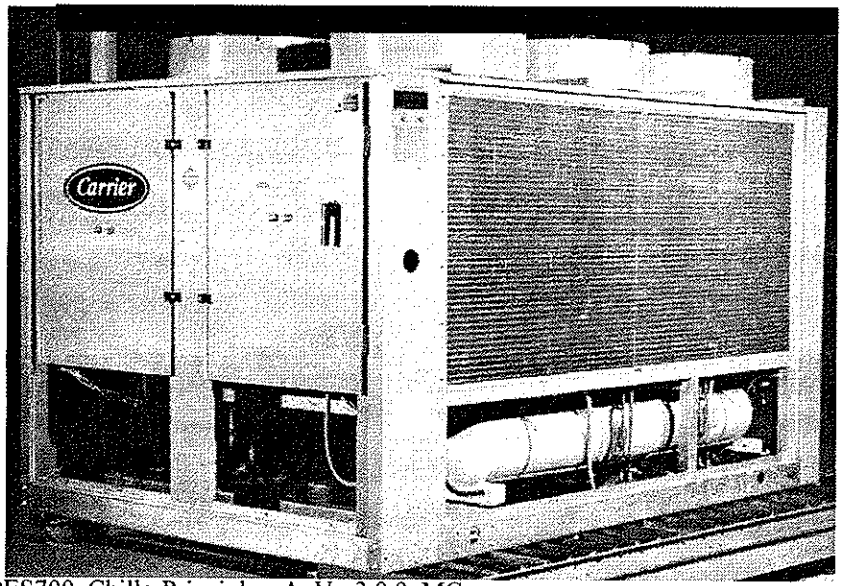

- **Increase "U" and area**
  - Same as evaporator options
- **Fouling more important**
  - Open piping circuits
  - Rivers, lakes, etc.
  - Regular tube cleaning
- **Metal resistance higher**
  - Copper nickel tubes
  - Stainless steel tubes
- **Area increase typically**
  - Water cooled
    - Same as evaporator
  - Air cooled
    - Larger size chiller

LOWER CONDENSING FLUID ENTERING TEMPERATURE

At full load on a design day, a water cooled chiller will be operating with about a 105 F Saturated Condensing Temperature. The cooling tower will return about 85 F water to the chiller.

At part load, the cooling tower can produce lower water temperatures because the outdoor air will have lower dry bulb and wet bulb temperatures. Traditionally, controls have been employed to maintain the water temperature returning from the tower at 85 F - even when the tower could produce lower temperatures.

The reason for keeping the tower return water elevated was to insure that the condenser refrigerant pressure remained sufficiently higher than the evaporator pressure. This pressure difference was needed to feed refrigerant at the proper flow rate to the evaporator. If the flow was insufficient, the evaporator would be "starved" and the compressor would remove more refrigerant than was being fed by the metering device. The evaporator pressure would fall and the chiller would trip out on low refrigerant temperature or in a worse case scenario - freeze the water in some of the tubes.

With the advent of Direct Digital Controls and Electronic Expansion Valves, much more precise control of refrigerant feed can be accomplished than was possible before.

Thus, depending on the specific water cooled chiller and the chiller load, the tower water temperature can be allowed to drop to as low as 55 F. The chillers on-board microprocessor monitors all parameters and assures safe machine operation.

This (85 - 55 = 30 F) extra 30 F reduction in condensing temperature results directly in significantly lower compressor motor power.

The same is true for air cooled chillers, except that they operate over a wider range of outdoor air conditions. The design condensing temperature is about 125 F with 95 F air entering the condenser. As the ambient temperature drops, condenser fans are cycled to maintain "head" pressure. This is sufficient down to about zero degrees ambient.

From zero down to about (-20 F) an accessory called motor master can be applied to the condenser to ensure safe chiller operation. The on-board microprocessor controls a single variable speed fan to provide adequate head pressure from zero to (-20 F) ambient.

Significant compressor energy is saved - particularly in northern climates where a great deal of operating hours exist at low ambient.

LOWER CONDENSING FLUID ENTERING TEMPERATURE

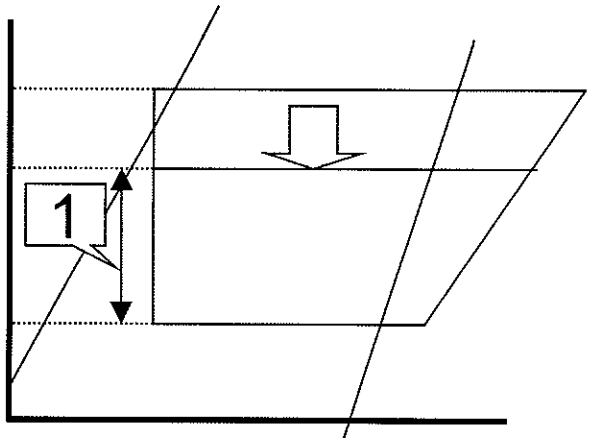

Water Cooled Chillers

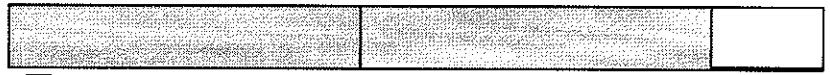

55 F Approx MIN

70 F Water Regulation Required

100 F MAX

Air Cooled Chillers



-20 F MIN

0 F Motor Master

32F ANTIFREEZE SOLUTION

Condenser Fan Cycling

125 F MAX

- **Min. pressure difference (1) needed to feed liquid refrigerant through metering device to evaporator**

CONDENSER WATER CONTROL

Cooling Tower Control:
A 3-way mixing valve is located in the condenser leaving water line. The valves bypass port is piped to a line which bypasses condenser water around the tower. The colder the water is returning from the tower, the less water is sent to the tower, and the more water that is bypassed.

A sensor located in the entering condenser water line feeds an on-board microprocessor in the chiller. The microprocessor monitors all machine operating parameters and modulates the 3-way valve to assure safe machine operation.

City Water Control:
When city water, or another source like a lake or river is used for condensing purposes, a 2-way modulating valve is positioned in the entering condenser water temperature line. The colder the water is returning from the tower, the less water is sent to the condenser.

A sensor located in the entering condenser water line feeds an on-board microprocessor in the chiller. The microprocessor monitors all machine operating parameters and modulates the 2-way valve to assure safe machine operation.

Variable Speed Pump:
Instead of a 2-way valve, the microprocessor may control a variable speed condenser water pump to achieve the same result. As the entering condenser water temperature drops, the pump speed is lowered to maintain safe chiller operation.

CONDENSER WATER CONTROL

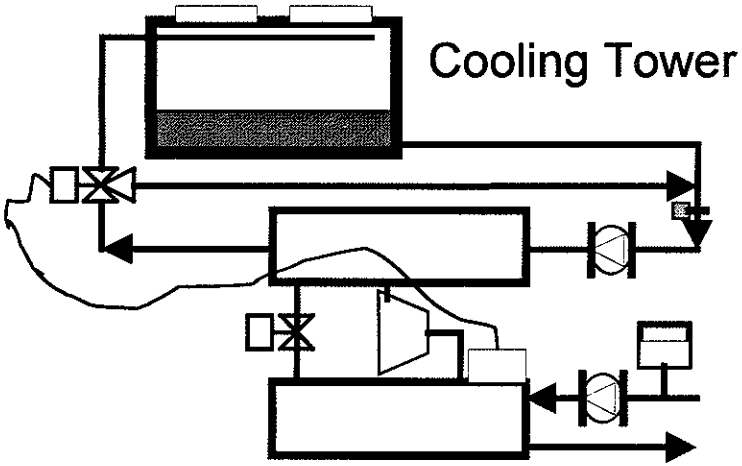

- 3-way mixing valve bypasses water around tower to maintain min. temp. (down to 55 F)
- On-board DDC controls modulate valve

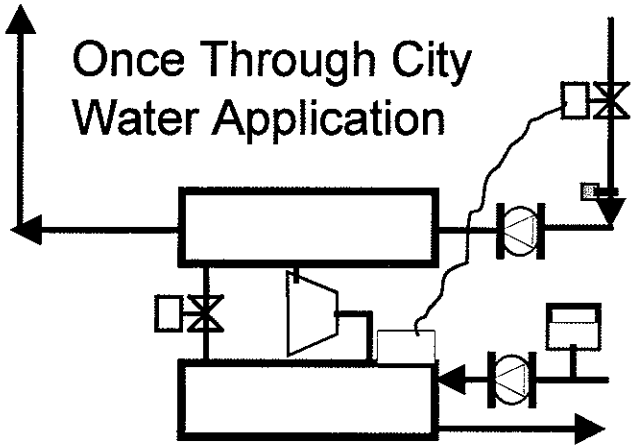

- 2-way modulating valve throttles city water to maintain min. condensing temp. (down to 60 F SCT)
- On-board DDC controls modulate valve
- Or - variable speed pump

QUIZ

- Answer the quiz questions.
- The instructor will then review the answers with you.

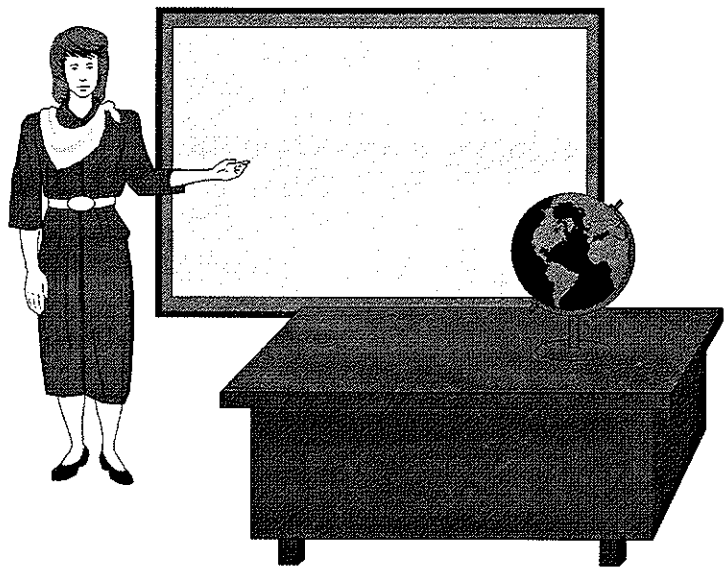

QUIZ

NAME: _____
DATE: _____

1- A 500 ton chiller produces 44F water with a 12F rise. The machines condenser has 85F entering water and 97F leaving water. Calculate the evaporator and condenser water GPMs. Assume a heat rejection factor of 1.2.

2- Water chillers use one of two types of evaporators. Name them:

3- What basic heat transfer equation describes the flow of heat in a chiller's evaporator or condenser ?

4- In a shell and tube heat exchanger, name the four resistances that hinder the flow of heat between the water and refrigerant:

5- If the velocity through a (1) pass condenser is 5 fps, what would it be if the passes were increased to (3):

6- Water chillers utilize one of two types of condensers. Name Them:

7- What is the lowest condenser entering water temperature possible with a water cooled chiller?

8- What is the lowest outdoor air temperature an air cooled chiller can operate at using fan cycling?

9- Name two methods used to control the minimum water temperature entering the condenser of a water cooled chiller:

10- Why does the entering water temperature for a water cooled chiller have to be kept at or above a minimum level?

END

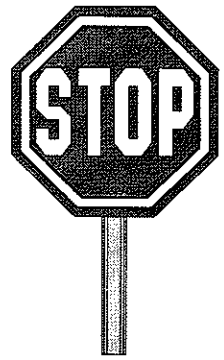

CHILLER PRINCIPLES

(Part II)

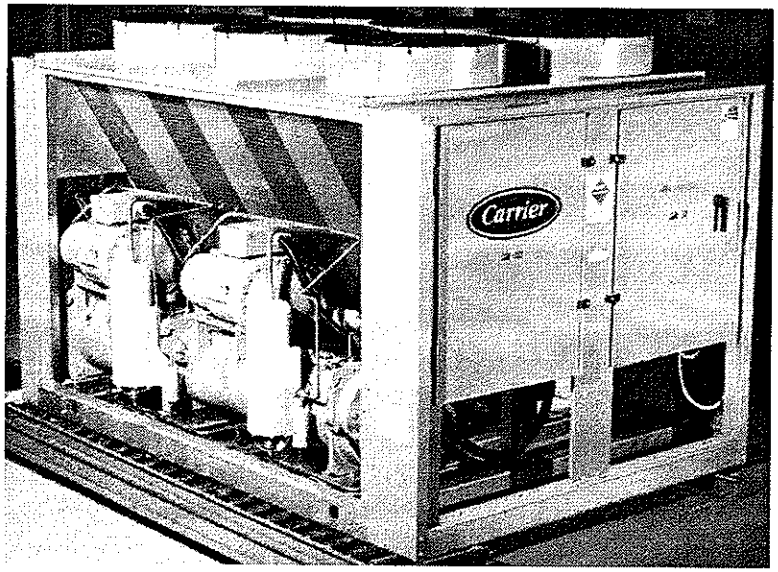

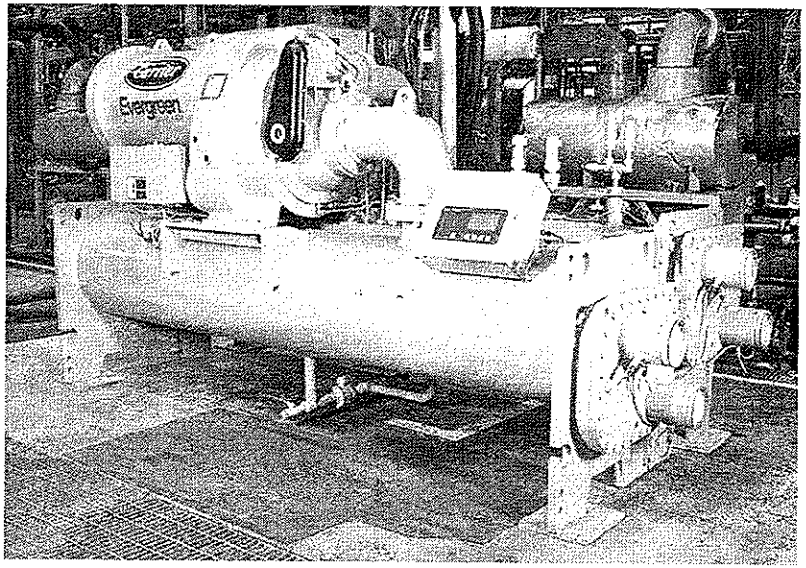

DES700

APPLIED WATER SYSTEM DESIGN

INCREASING THE REFRIGERATION EFFECT

Now let us turn our attention to another of the three factors affecting chiller power and size - increasing the refrigeration effect.

We stated earlier that the power consumed by the compressor in a refrigeration cycle and the ultimate chiller size is a function of three items:

1- The refrigerant mass flow being pumped by the compressor.
2- The pressure rise across which the compressor must operate (Pc - Pb). This referred to as the compression ratio or compressor lift.
3- The actual efficiency of the compressor.

In today's market place, the cost and availability of energy have become important considerations in the purchase of a water chiller. The era of cheap energy has passed. Smaller sized equipment is also being demanded to meet the rising costs of building space.

Let's now take a look at some of the common ways manufacturers have used to increase the refrigeration effect of the refrigeration cycle - thereby improving the efficiency of the chiller and reducing its size.

INCREASING THE REFRIGERATION EFFECT

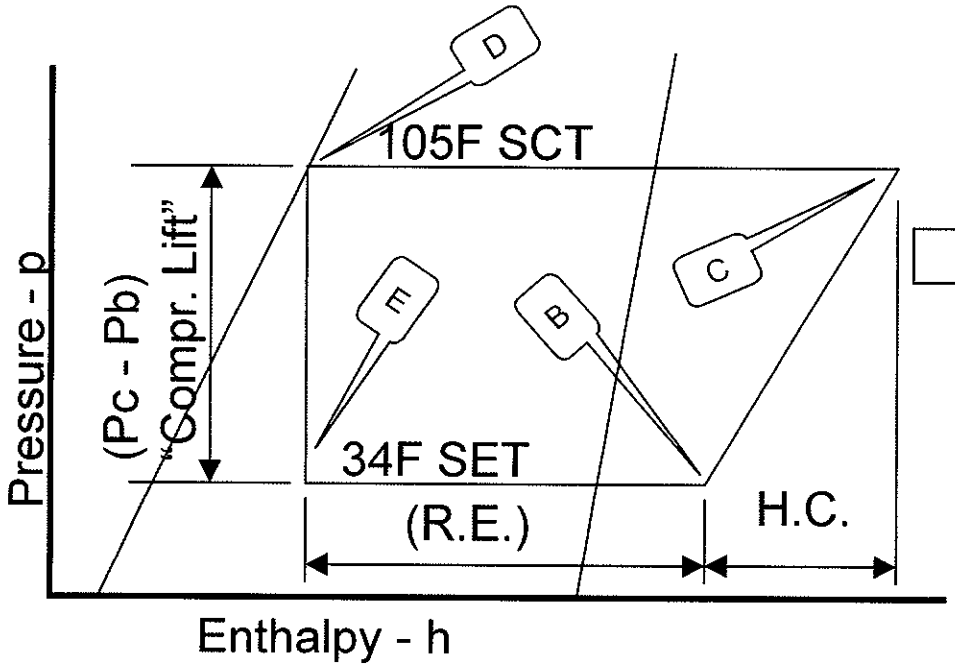

- **Refrigeration Effect (R.E.)**
- **Heat of Compression (H.C.)**
- **Pressure Rise (Pc - Pb)**

- **The power consumed by the compressor is a function of (3) items:**
  - **Refrigerant mass flow through the compressor in lb/min (R.E.)**
  - **Pressure rise ("lift") across the compressor (Pc - Pb)**
  - **Compressor efficiency (heat of compression)**
- **Any device which improves any of the above three items lowers chiller energy and/or size**
- ***Let's look at increasing the (RE).***

INCREASING RE

There are basically three ways a manufacturer can design equipment to increase the cycle refrigeration effect of commercial chillers:

1- Use a subcooler
2- Use of a flasc box
3- Use an economizer

Before we take a close look at each of these options and what the chiller hardware might look like, let's first look at the ideal expansion process - the process of returning high pressure liquid refrigerant from the condenser back to the evaporator.

INCREASING RE

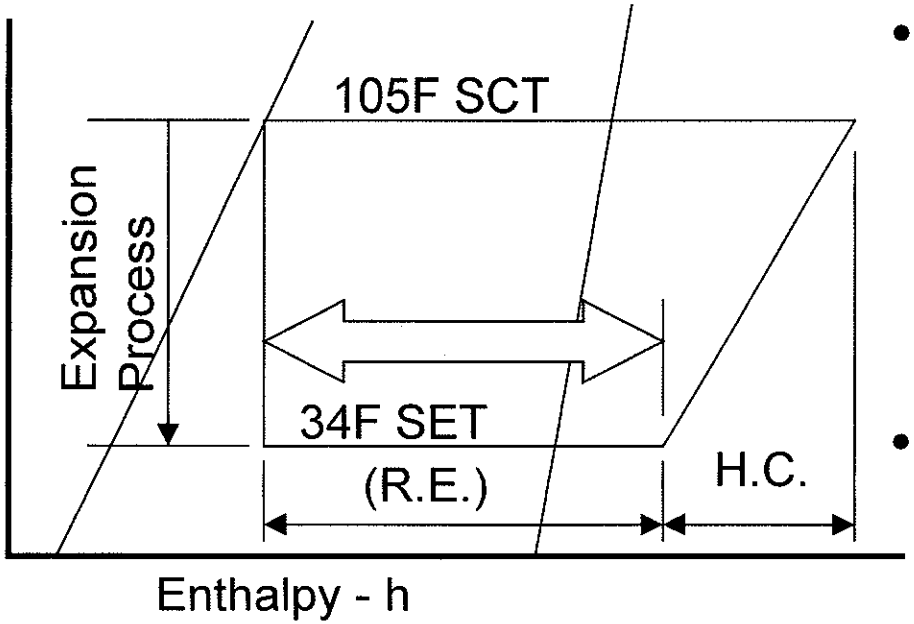

- **Ways to increase refrigeration effect:**
  - **Use of a subcooler**
  - **Use of a flasc box**
  - **Use of an economizer**
- **We will begin by looking at the ideal expansion process**

IDEAL EXPANSION PROCESS

In a normal refrigeration cycle, the refrigerant has given up heat to the condensing medium and is condensed into a liquid at (1) as it leaves the condenser.

Typically the liquid refrigerant passes through some form of metering device and "expands" - drops in pressure as it enters the evaporator at (2). Some of the liquid refrigerant "flashes" into a vapor in the expansion process. The mixture of flash gas and liquid that enters the evaporator has a combined heat content indicated by point (2). Typically some 20% of the liquid has flashed into a vapor and the heat of vaporization of that 20% flash gas is lost to do useful work absorbing heat from the water passing through the evaporator.

Ideally, we would then like the liquid refrigerant to leave the condenser and expand along the saturated liquid line so that it could enter the evaporator as 100% liquid - point (3).

How close we get to point (3) determines how efficient the cycle can become. Let's look at some ways we can cause the expansion process to approach point (3).

IDEAL EXPANSION PROCESS

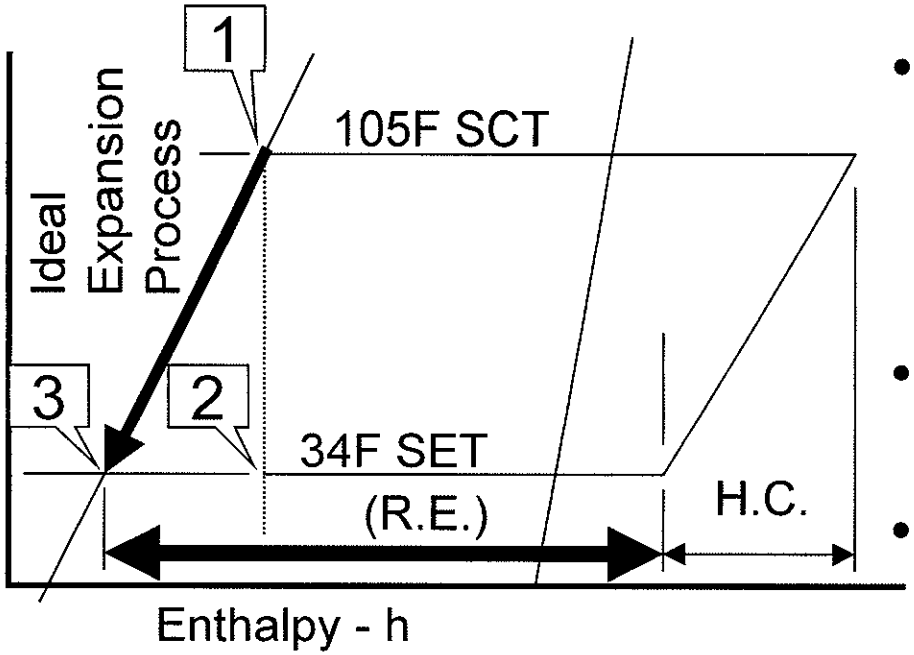

- Refrigerant has condensed into a liquid state and is ready to leave the condenser at (1)
- Refrigerant normally enters evaporator at (2)
- Ideally would like the refrigerant to remain a liquid and enter the evaporator at (3)
- RE would be maximized
- Let's see how we approach point (3)

USE OF A SUBCOOLER

In a simple refrigeration cycle, the liquid refrigerant would be condensed to point (1). A Subcooler is any device that cools the liquid refrigerant below its saturation point (say from 1 to 2).

Normally, the expansion process would be from 1 to 3 and RE1 would result.

With a subcooler, the expansion process takes place from 2 - 4 and RE2 results.

RE2 is larger than RE1, and the cycle efficiency has improved. Each pound of liquid reaching the evaporator at 4 can absorb more BTUs from the water flowing through the tubes. Looked at another way, less pounds of refrigerant need to be circulated by the compressor for the same evaporator load.

Typically, commercial subcoolers are designed for about 15 F of subcooling. This is an economical trade-off point where the extra cost of the subcooler provides sufficient improvement in cycle efficiency.

Let's now take a look at what a subcooler looks like.

USE OF A SUBCOOLER

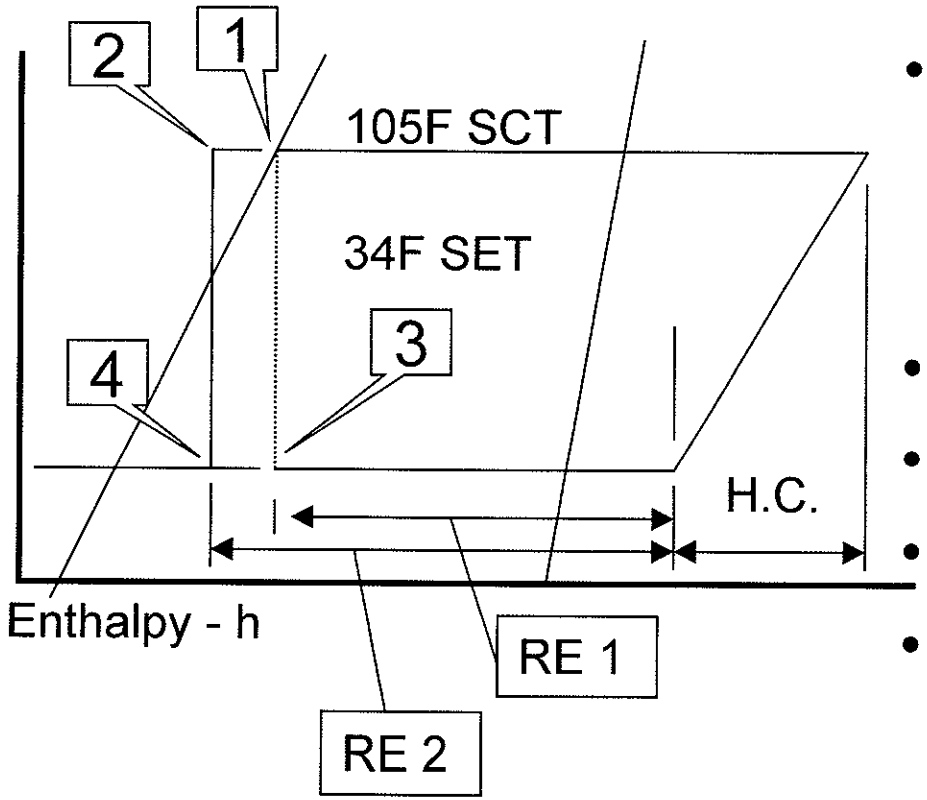

- What does a subcooler look like?

- A subcooler is a device that cools the liquid in the condenser below its saturation point (1 to 2)
- Normal expansion is (1 to 3)
- New expansion is (2 - 4)
- New RE 2 is > old RE 1
- Each pound of liquid refrigerant absorbs more heat in the evaporator
- Less pounds to circulate
- 15 F subcooling is normal and economical

TYPICAL SUBCOOLER

Mechanically the Subcooler is located at the bottom of the condenser. In a water cooled condenser, a "baffle" runs across the bottom of the condenser. A small tube bundle exists below the baffle - the subcooler tubes.

Refrigerant gas from the compressor enters the condenser at the top. Water passing through the condenser portion of the heat exchanger cools the gas to a saturated liquid. The saturated liquid refrigerant falls to the top of the baffle and flows by gravity down through a drain hole in the baffle into the Subcooler. The refrigerant then flows in a serpentine counterflow manner along the Subcooler. The coldest water from the cooling tower is piped into the Subcooler and cools the liquid refrigerant below its saturation temperature - the water subcools the refrigerant.

The subcooled liquid refrigerant is then piped to the bottom of the evaporator. The subcooling increases the refrigeration effect of every pound of refrigerant that flows through the evaporator.

The subcooler for an air cooled condenser is very similar. Refrigerant gas enters the top tubes of several circuits in an air cooled condenser and condenses as the refrigerant moves toward the bottom of the tube circuits in a serpentine manner. The last length of each tube at the bottom is filled with liquid refrigerant and is cooled below saturation by the air passing over the tubes.

The overall effect of a subcooler is to improve the cycle efficiency by about 7% - 12% improvement for every degree of subcooling.

There is another device that acts like a subcooler - a Flasc Box. Let's see how this device works.

TYPICAL SUBCOOLER

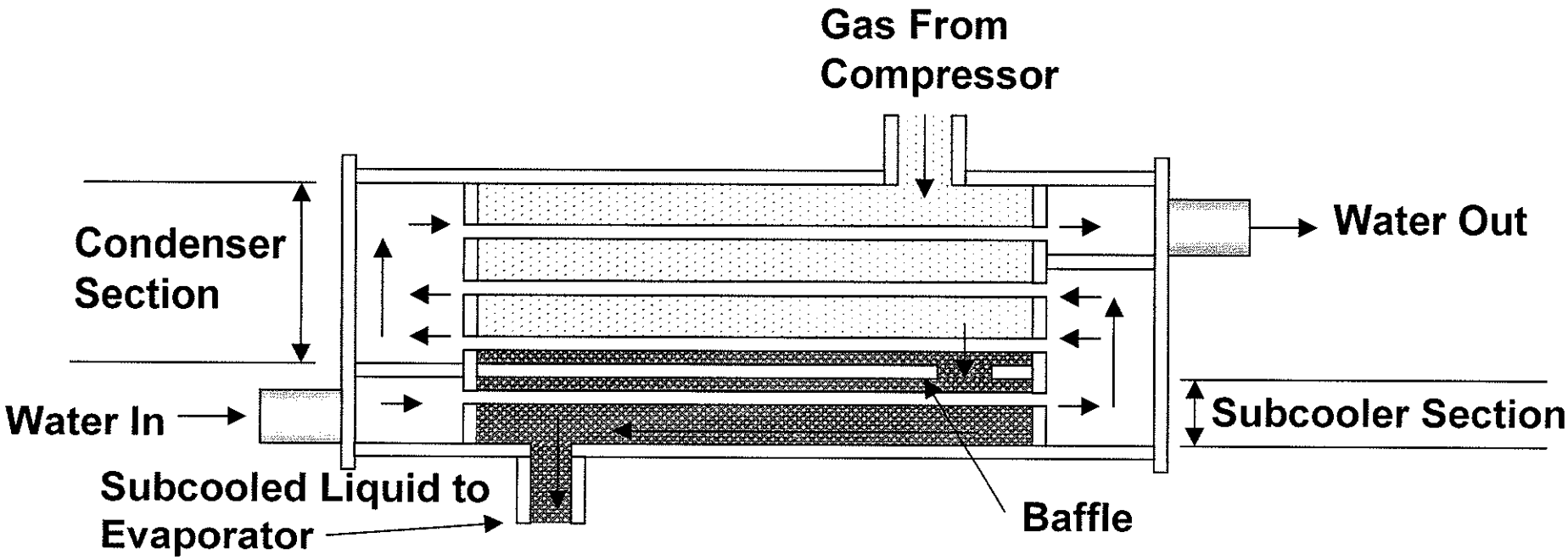

- Baffle separates bottom of condenser
- Refrigerant gas condenses in top of condenser
- Liquid drains into subcooler section below baffle
- Coldest water enters subcooler & subcools liquid refrigerant below saturation

FLASC SATURATOR

Carrier has developed a device that is not a subcooler, but the net effect of its use is the same as a subcooler. The device is called a "Flasc Box". In the center of the diagram below is a box with two flasc orifices shown in the bottom of the box. The flasc box operates as follows:

Refrigerant vapor enters the condenser from the compressor. Refrigerant condenses (1) as it comes in contact with cold water flowing through the condenser tubes. Saturated condensed liquid refrigerant accumulates at the bottom of the condenser (2). The saturated liquid refrigerant is directed to the flasc orifices (3).

As the refrigerant passes through the flasc orifice it undergoes a drop in pressure and some of the liquid refrigerant flashes into a vapor (4 - flasc vapor). The remaining liquid is cooled to saturation at a lower enthalpy than it had at (2).

Cold water flowing through the condenser tubes (5) condenses the flasc vapor to a liquid (6). All the refrigerant is now once again a saturated liquid at (6) - only it is now saturated at a lower pressure. The saturated liquid at (6) now has a lower enthalpy than it did at (2).

A float valve maintains the liquid refrigerant level in the flasc box and feeds refrigerant on to the evaporator. As the liquid drops in pressure, flash gas is once again produced. Both the flash gas and liquid refrigerant enter the evaporator at (8).

The overall effect of a flasc box is to improve the cycle efficiency by about 7% - similar to that achieved by a subcooler.

Thus, the refrigeration effect of the cycle has been improved. The flasc box creates the same effect as a subcooler, but utilizes a much smaller portion of the condenser tubes than a traditional subcooler would. This makes a condenser less costly than one equipped with a traditional subcooler.

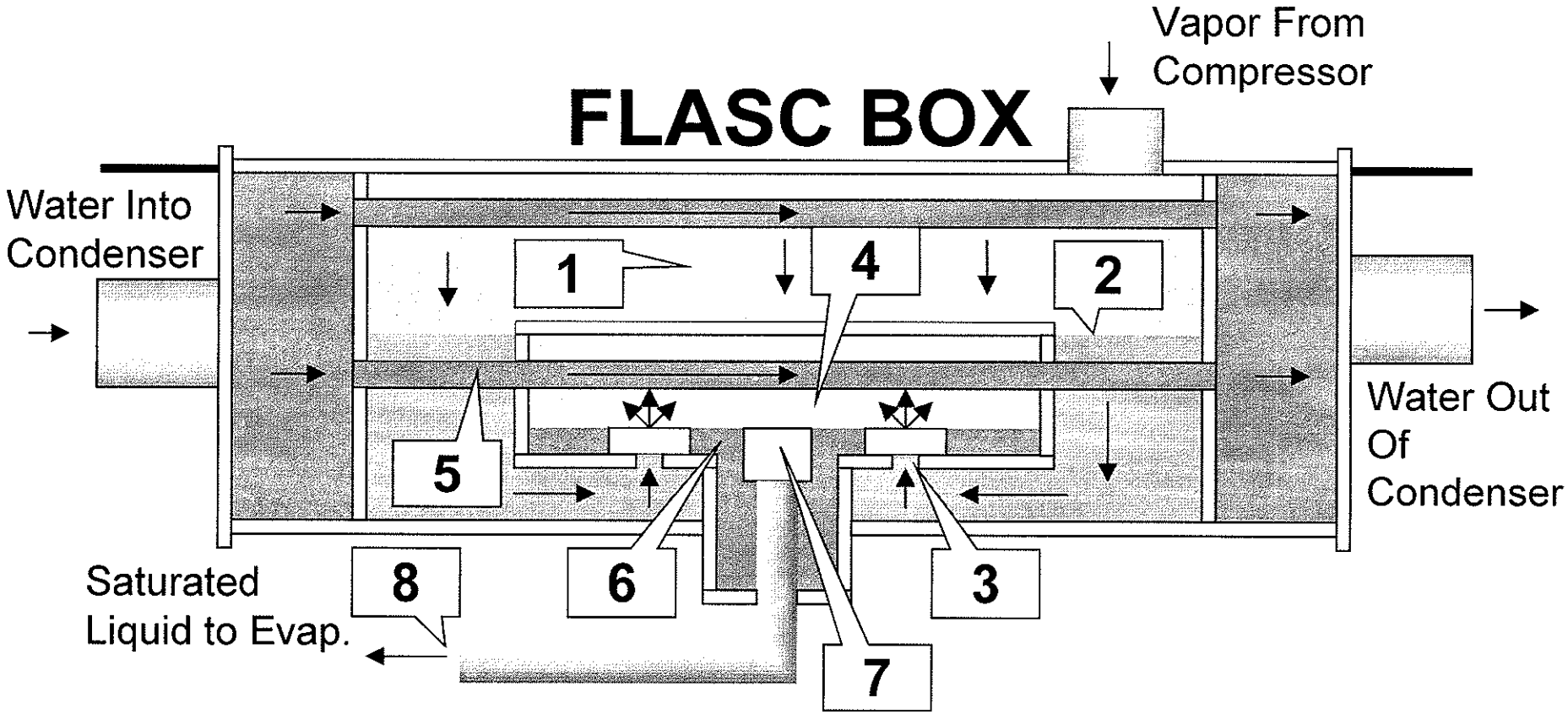

- (1) Condensing vapor
- (2) Liquid at refrigerant (SCT)
- (3) Liquid enters flasc orifice
- (3) Flasc expansion process
- (4) Some liquid vaporizes
- (5) Water condenses flasc vapor
- (6) Sat liquid - at lower pressure
- (7) Float keeps flasc liquid level
- (8) Flasc liquid to evaporator at lower enthalpy than at (2)
- Cycle RE is increased

FLASC SATURATOR CYCLE

When the operation of the flasc box is plotted on a pressure enthalpy diagram, the result is as shown on the page below.

Refrigerant vapor enters the condenser from the compressor. Refrigerant condenses (1) as it comes in contact with cold water flowing through the condenser tubes. Saturated condensed liquid refrigerant accumulates at the bottom of the condenser (2). The saturated liquid refrigerant is directed to the entrance of the flasc orifices (3).

As the refrigerant passes through the flasc orifices it undergoes a drop in pressure and some of the liquid refrigerant flashes into a vapor (4 - flasc vapor). The remaining liquid is cooled to saturation (6) at a lower enthalpy than it had at (2).

Cold water flowing through the condenser tubes also condenses the flasc vapor to a liquid at (6). All the refrigerant is now once again a saturated liquid at (6) - only it is now saturated at a lower pressure. The saturated liquid at (6) now has a lower enthalpy than it did at (2).

A float valve maintains the liquid refrigerant level in the flasc box and feeds refrigerant on to the evaporator. As the liquid drops in pressure, flash gas is once again produced. Both the flash gas and liquid refrigerant enter the evaporator at (8).

The overall effect of a flasc box is to improve the cycle efficiency by about 7% - similar to that achieved by a subcooler.

The refrigeration effect of the cycle has been improved. Thus, the flasc box creates the same effect as a subcooler, but utilizes a much smaller portion of the condenser tubes than a traditional subcooler would. This makes the flasc equipped condenser less costly than one equipped with a traditional subcooler.

Now, let's look at another device that increases the refrigeration effect - an economizer.

FLASC SATURATOR CYCLE

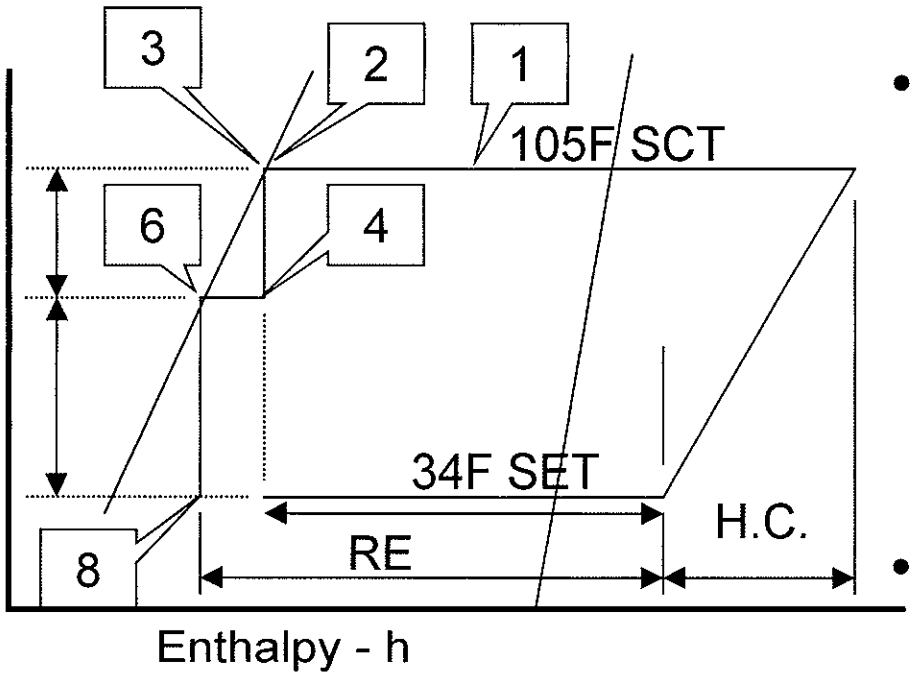

- **Acts like subcooler**
  - (1) Refrigerant vapor is condensing
  - (2) Liquid saturated @ 105 F
  - (3) Liquid enters flasc orifice
  - (4) Flasc liquid expands to (4) from (2)
- **Flash gas created in Flasc Box**
  - (6) Cold water through tubes condenses flasc flash gas to saturation

- **(8) Liquid expands into evaporator (6 to 8)**
- **RE improved**

ECONOMIZER: INCREASE RE

Many chillers use more than one stage of compression. In this case, it is possible to improve the cycle efficiency by using an "economizer". In this cycle, the liquid refrigerant leaving the condenser (6) passes through two pressure reducing devices before reaching the cooler. After going through the first device (2), some of the liquid flashes due to the sudden drop in pressure and is drawn off into the inlet of the second stage (4). Thus, the flash gas generated at the intermediate pressure is cycled through the second stage—reducing the first stage weight flow, and hence, the horsepower handled by the first stage. The remaining liquid is cooled by the flash gas to saturation at (7). The remaining saturated liquid is passed on to the evaporator by the second metering device.

Let's look at a P-H diagram to see the impact of an economizer - an increase in refrigeration effect of some 8 to 10%.

ECONOMIZER: INCREASE RE

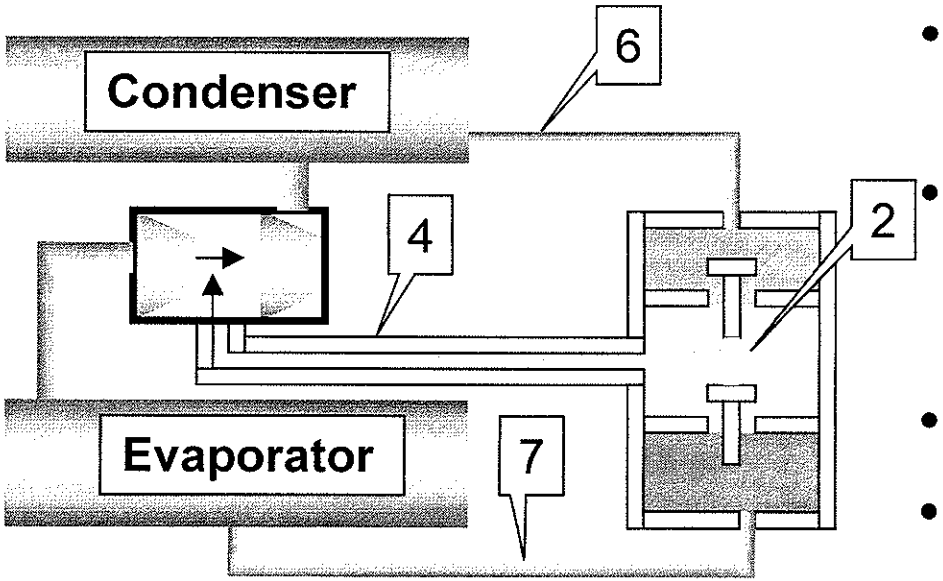

- Two stages needed

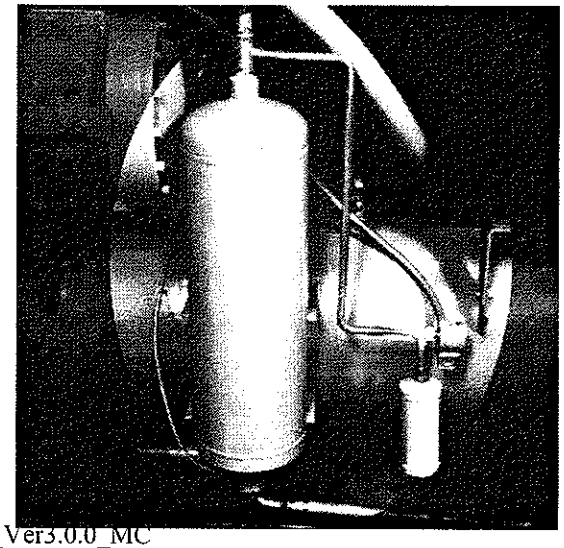

- Saturated liquid leaves condenser at (6)
- Refrigerant passes thru first metering device
  - Drops in pressure
- Flash gas created (2)
- Flash gas drawn off into inlet of second compression stage (4)
- Remaining liquid (7) is cooled to saturation and passes on to evaporator
- Refrigeration effect increased by 8 to 10%

ECONOMIZER CYCLE: INCREASE RE

Many chillers use more than one stage of compression. In this case, it is possible to improve the cycle efficiency by using an "economizer". In this cycle, the liquid refrigerant leaving the condenser (6) passes through two pressure reducing devices before reaching the cooler. After going through the first device (2), some of the liquid flashes due to the sudden drop in pressure and is drawn off into the inlet of the second stage (4). Thus, the flash gas generated at the intermediate pressure is cycled through the second stage—reducing the first stage weight flow, and hence, the horsepower handled by the first stage. The remaining liquid is cooled by the flash gas to saturation at (7). The remaining saturated liquid is passed on to the evaporator by the second metering device (7 to A).

The P-H diagram below shows the increase in refrigeration effect produced by the addition of an economizer to the basic centrifugal cycle. The net result is that the economizer increases the cycle COP by 8 to 10%, and is therefore well justified with any multistage compressor.

ECONOMIZER CYCLE: INCREASE RE

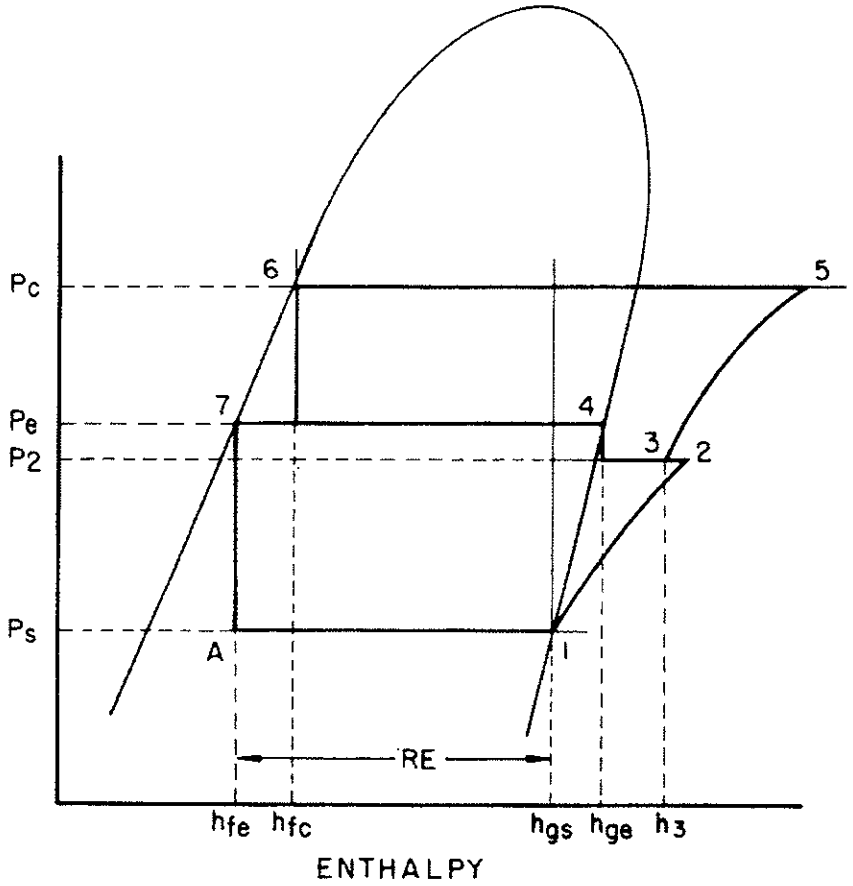

- Saturated liquid leaves condenser at (6)
- Refrigerant passes through first metering device
  - Drops in pressure
- Flash gas created (4)
- Flash gas drawn off into inlet of second compression stage (3)
- Remaining liquid (7) is cooled to saturation and passes on to evaporator
- Refrigeration effect increased by 8 to 10%

COMPRESSOR EFFICIENCY

Now let's turn our attention to the last of the three factors affecting chiller power consumption and size - compressor efficiency.

The power consumed by the compressor in a refrigeration cycle and the ultimate chiller size is a function of three items:

1- The refrigerant mass flow being pumped by the compressor.
2- The pressure rise across which the compressor must operate (Pc - Pb). This referred to as the compression ratio or compressor lift.
3- The actual efficiency of the compressor.

In today's market place, the cost and availability of energy have become important considerations in the purchase of a water chiller. The era of cheap energy has passed. Smaller sized equipment is also being demanded to meet the rising costs of building space.

Therefore, any device or means that improves COMPRESSOR EFFICIENCY will lower compressor energy and reduce chiller size. Let's take a look at some of the common ways manufacturers have used to make chillers smaller and more efficient. We will start with reducing the pressure rise across the compressor.

P. H. DIAGRAM FOR R – 22

As superheat increases, refrigerant specific volume entering the compressor increases

Refrigerant mass flow through compressor decreases

Efficiency drops

EXV reduces needed superheat from 15 F to 5 F

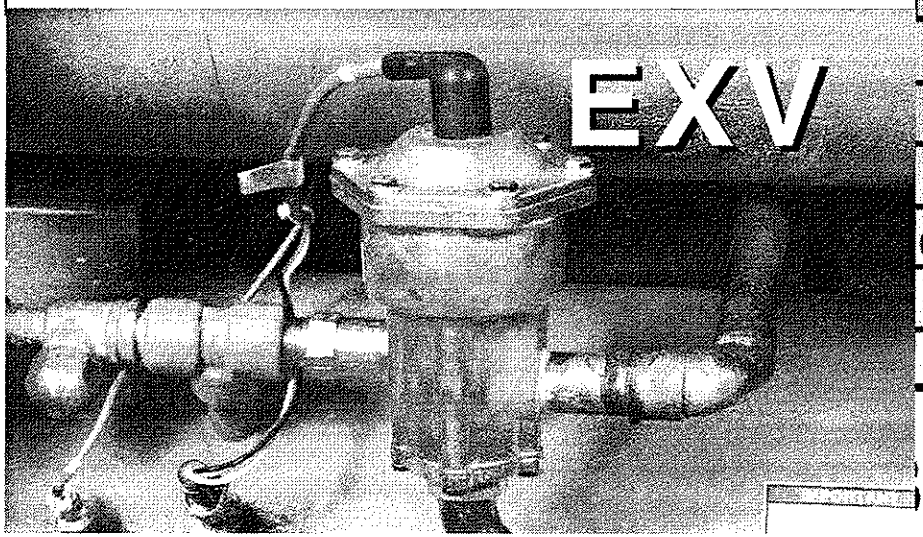

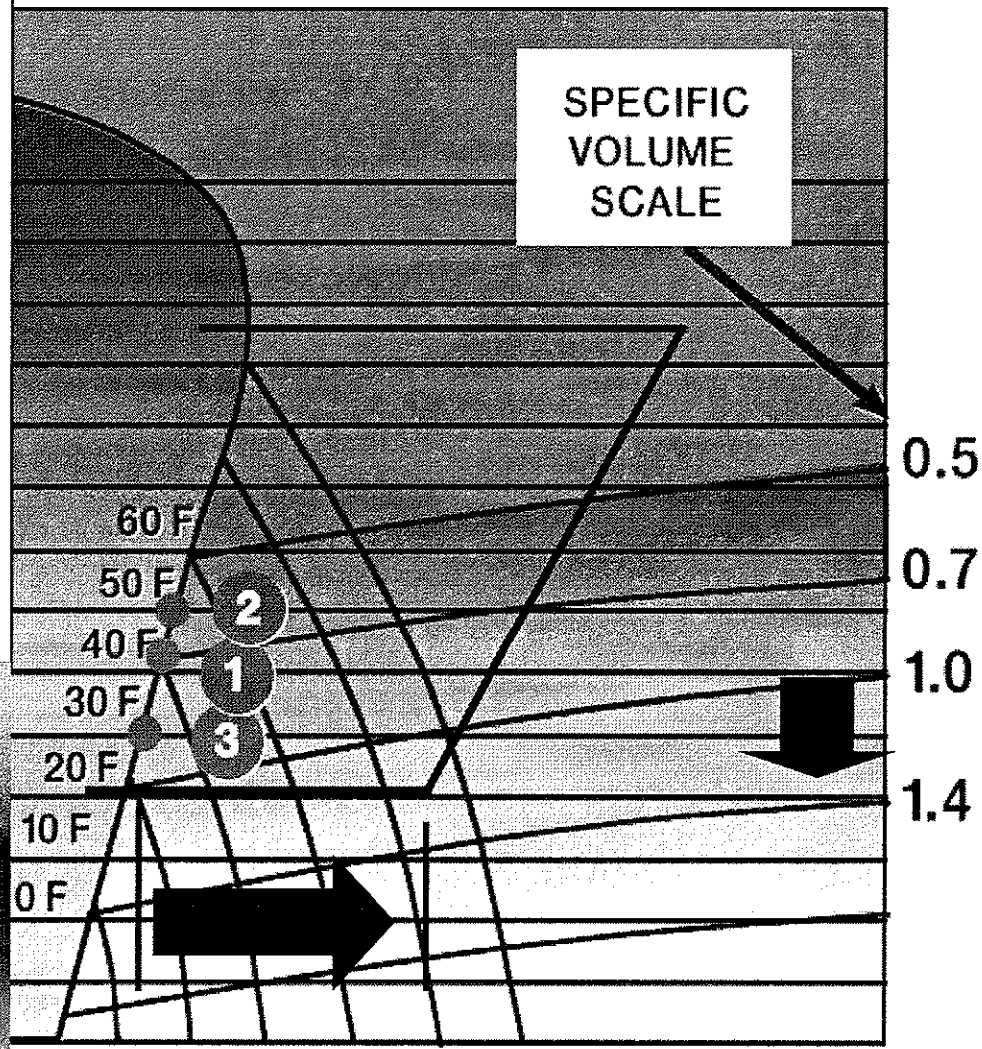

TU / Lb.)

COMPRESSOR TYPES

When considering commercial water chillers, there are several manufacturers who offer three type of chillers:

1- Reciprocating compressor water chillers

2- Screw compressor water chillers

3- Centrifugal water chillers

The type of compressor dictates the overall capacity range and type of chiller operation.

The pages that follow describe their differences and helps to narrow their choice for a specific application.

COMPRESSOR TYPES

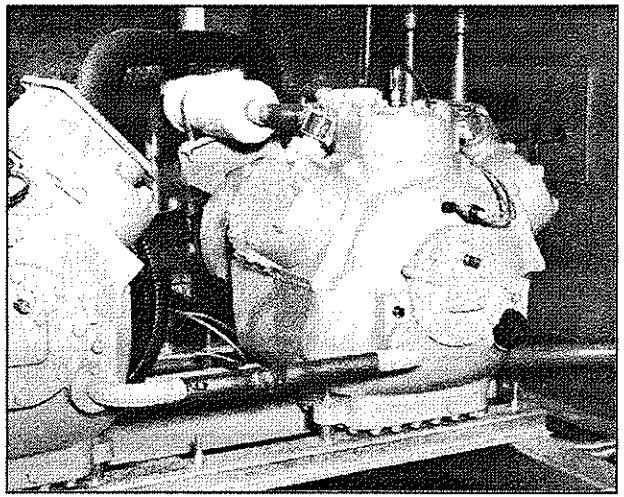

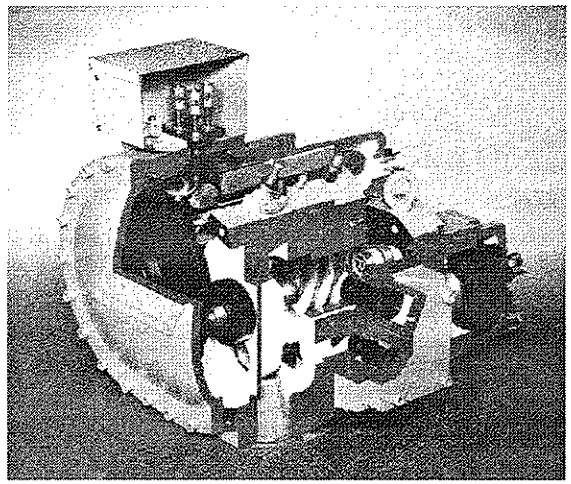

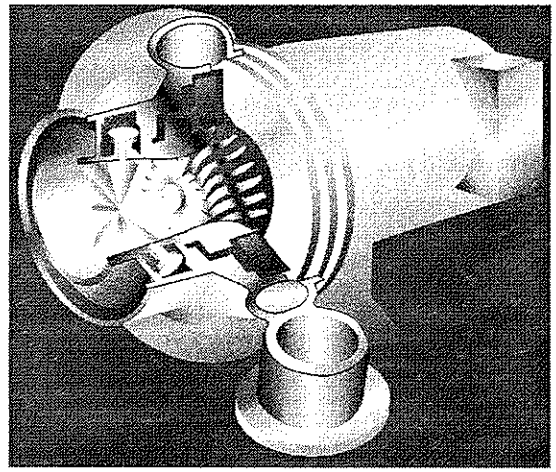

- **Three types of compressors used in commercial water chillers:**
  - **Reciprocating**
  - **Screw**
  - **Centrifugal**
- **In what capacity ranges are they?**

CAPACITY RANGES AVAILABLE

As shown below, water chillers are available from 15 tons to 10,000 tons per machine. Reciprocating chillers are available in the lower capacities from 15 to about 100 tons. Screw chillers start at about 75 tons and run up to around 750 tons. Centrifugal chillers start at about 100 tons and are available up to about 10,000 tons.

Why one versus another? To answer that question we need to take a quick look at the general characteristics of each type of compressor.

CAPACITY RANGES AVAILABLE

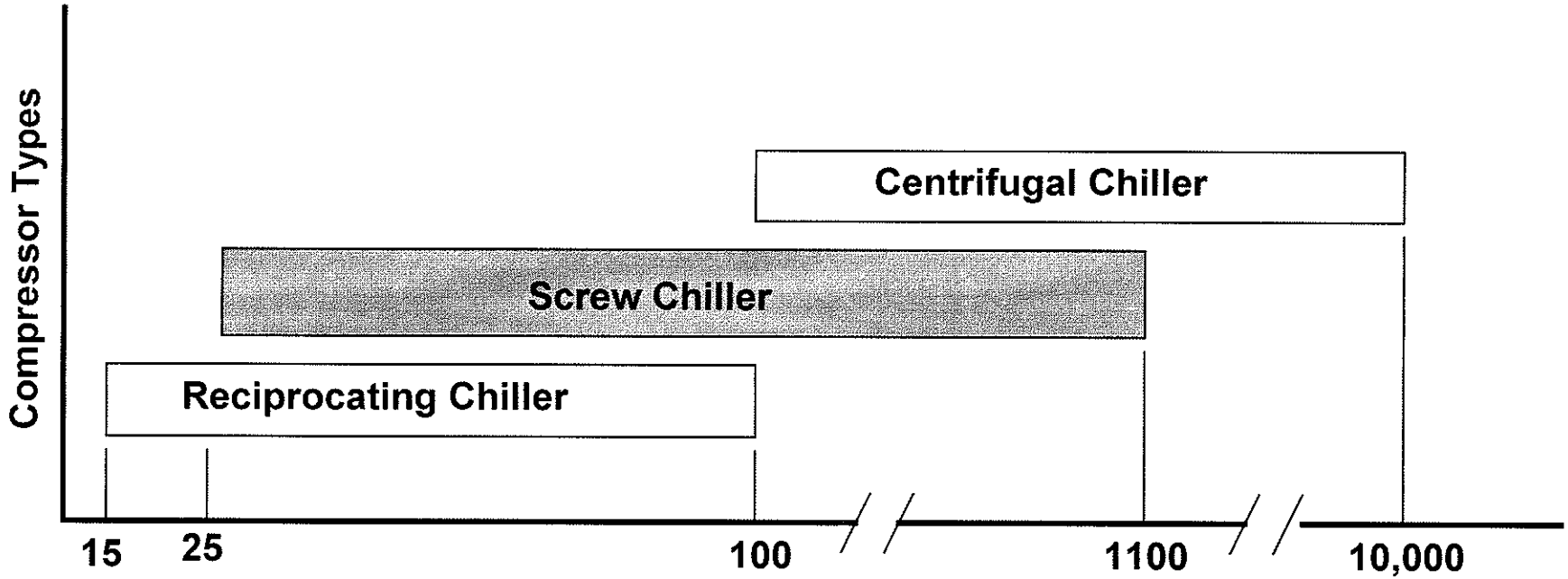

- Reciprocating Water Chillers : 015 to 100 Tons
- Screw Water Chillers: 075 to 750 Tons
- Centrifugal Water Chillers: 100 to 10,000 Tons

RECIPROCATING

The oldest form of compressor is the reciprocating compressor. It uses an up and down stroke to pull gas into a cylinder, compress it, and discharge it to the condenser. Because it captures a fixed volume of refrigerant gas, it is said to be a positive displacement device.

Because it is a positive displacement device it can handle rather large compression ratios readily with no unstable compressor operation at part loads. Such compression ratios are experienced with air cooled applications.

Because of the nature of capturing small quantities of refrigerant vapor, the reciprocating compressor finds it's home in small capacity applications. Multiple compressors - up to 8 - have been arranged together with two refrigeration circuits to provide larger water chillers, however, 4 compressors are the norm in today's market.

RECIPROCATING

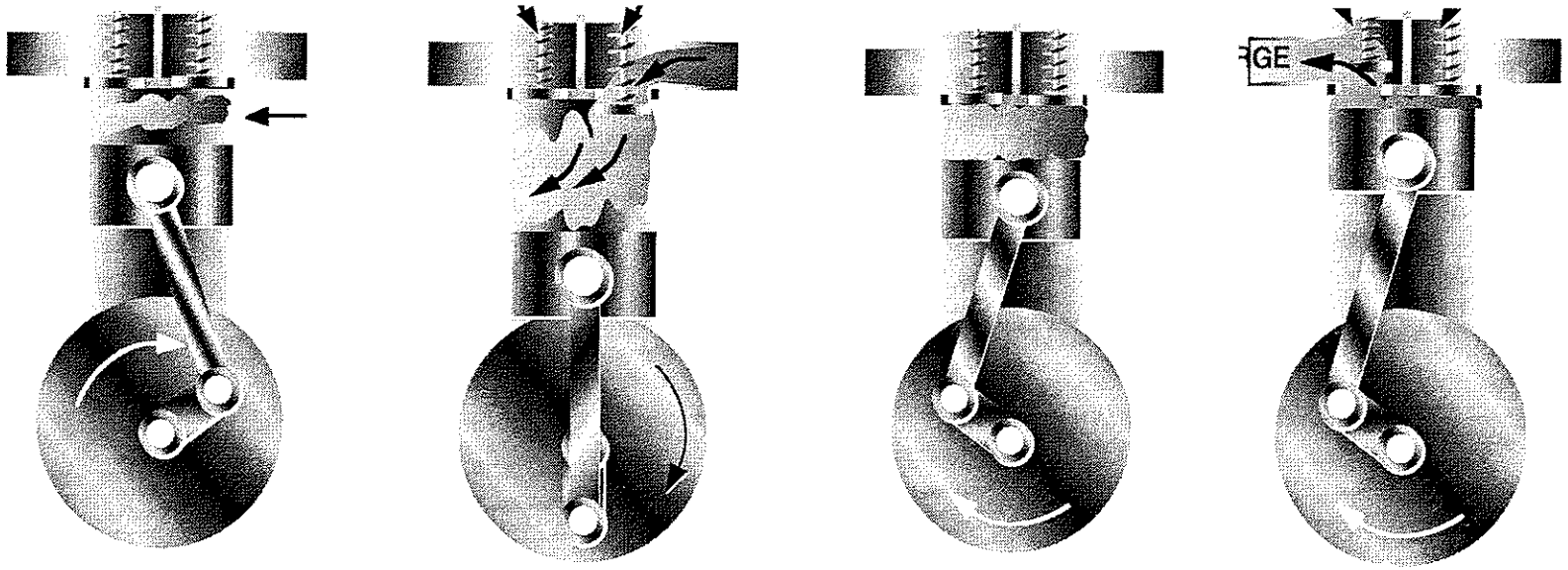

- **Positive displacement device**
  - **Captures volume of gas and compresses it**
- **Good for high compression ratios**
- **Multiple compressors used to increase chiller capacity**
- ***Good for small capacities and high compression ratios***

CENTRIFUGAL

Where as the reciprocating compressor is very capable of handling small capacities at high compression ratios, the centrifugal is at the opposite end of the scale. The centrifugal compressor, due to its rotary nature, is well suited to handle large volumes of refrigerant vapor at low compression ratios.

It is not a positive displacement device. Rather the centrifugal relies on its spinning impeller to impart centrifugal force on the gas - forcing it into smaller spaces at it reaches the diffuser section, and thereby compressing it. Since the impeller can rotate at high speeds, large volumes of refrigerant vapor can be compressed in a short period of time. Centrifugal compressors have been designed to rotate at as high as 100,000 RPM.

Reciprocating equipment, due to its up-down stroke arrangement, is not capable of the same centrifugal speeds, and can not handle the same volumes of vapor that a centrifugal can.

Not being a positive displacement device, the flow into the diffuser section of the centrifugal tends to break down when the compression ratio becomes to large - particularly at part load when the volume of gas flowing into the diffuser is decreased.

Thus, the centrifugal compressor, due to its rotary nature, is well suited to handle large volumes of refrigerant vapor at low compression rations.

CENTRIFUGAL

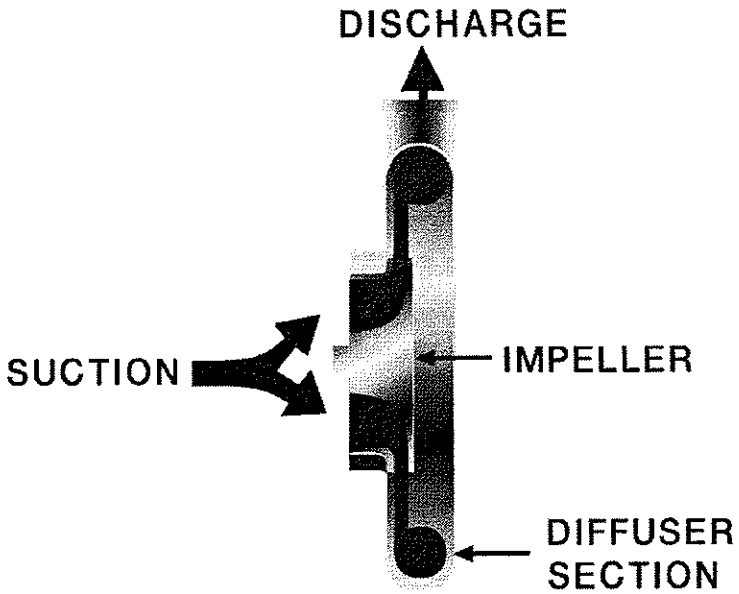

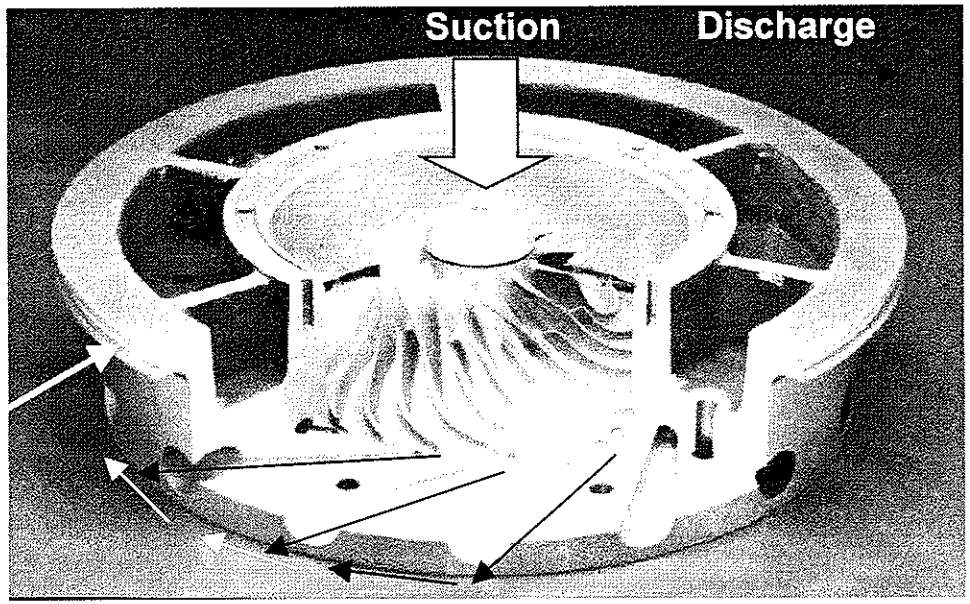

- **Suction gas enters eye of spinning impeller**
- **Impeller imparts centrifugal force to gas**
- **Gas flows to & collects in diffuser (pressurized)**
- **Diffuser discharges gas to condenser**
- ***Handles large capacities at low compression ratios***

SCREW

Where as the reciprocating compressor is very capable of handling small capacities at high compression ratios, the centrifugal, due to its rotary nature, is well suited to handle large volumes of refrigerant vapor at low compression rations.

What is needed is a rotating positive displacement device that combines the attributes of both the positive displacement reciprocating machine and the large volume rotational nature of the centrifugal. Here in lies the strength of the screw compressor.

Like the reciprocating machine, the screw captures and positively compresses volumes of vapor - it is a positive displacement device. The size of the rotors and their mass, however, make it impossible for the screw to be economically feasible in small capacities where the reciprocating compressor is dominant. Thus, the screw tends to be used in larger capacities - starting around the 50 to 75 ton level.

The screw also has the rotational nature of the centrifugal - being able to rotate at speeds higher than the reciprocating machine, and thus able to handle larger capacities than the reciprocating machine.

However, the rotating lobes of the screw that give it its positive displacement characteristic also become its limiting factor when considering compressor size and rotational speeds. The mass of the rotors and their frictional surfaces do not permit the screw to handle the large capacities associated with centrifugal compressors.

The screw tops out at about 750 tons, although one manufacturer has pushed its use to 1100 tons. Clearly, anything above 1100 tons is the pure range of the centrifugal compressor.

SCREW

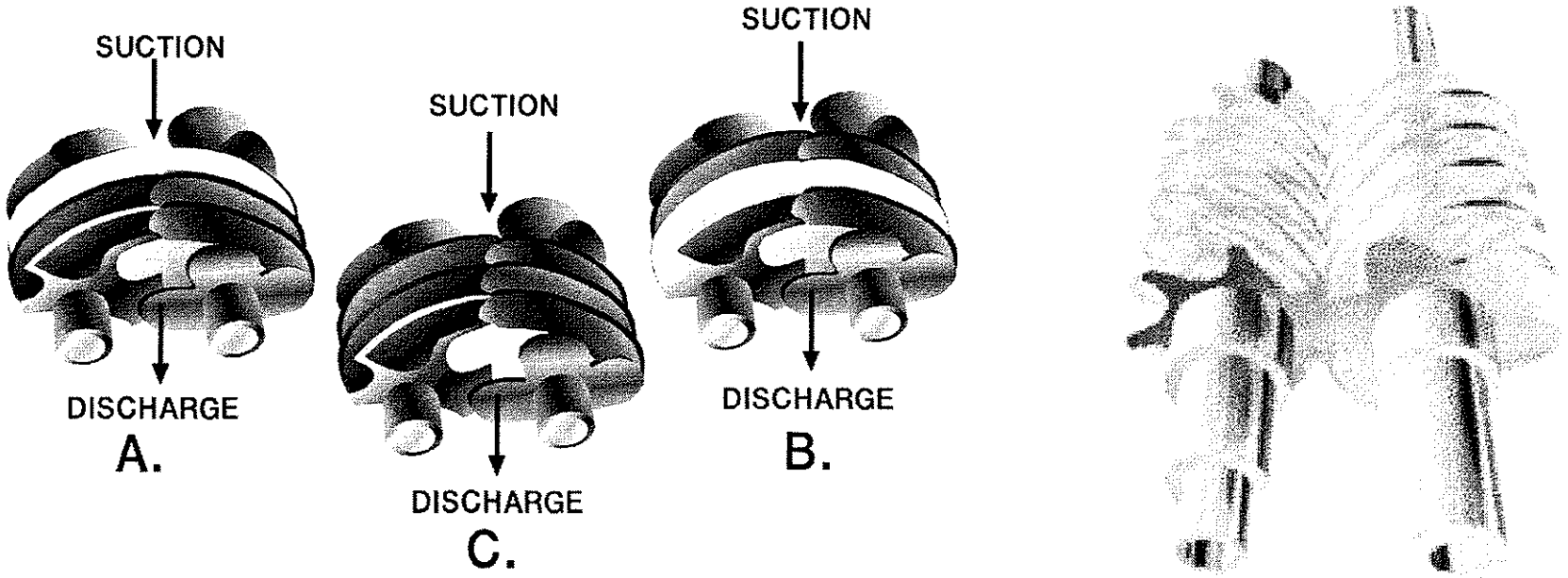

- Gas is pulled into a suction cavity (A)
- Rotors spin and decrease cavity size (B)
- Small compressed volume of gas discharges (C)
- Characteristic: rotating positive displacement
- *Medium capacities at high compression ratios*

COMPRESSOR USE

Need small capacity equipment?
* The Reciprocating Chiller will likely be your choice - Water Cooled or Air Cooled

Need large capacity with air cooled condensing?
* The Screw Chiller is the best choice

Need large capacity with water cooled condensing?
* Again the Screw Chiller is most likely the choice

Need large capacity with water cooled condensing?
* The Centrifugal is the choice to make

What if the choices overlap?
* Compare cost and energy use at full and part load

COMPRESSOR USE

- Need small capacity equipment?
  - The reciprocating chiller will likely be your choice
    - Water-cooled or air-cooled
- Need large capacity with air-cooled condensing?
  - The screw chiller is the best choice
- Need medium capacity with water cooled condensing?
  - Again, the screw chiller is most likely the choice
- Need large capacity with water cooled condensing?
  - The centrifugal is the choice to make
- What if the choices overlap?
  - Compare cost and energy use at full and part load

CAPACITY CONTROL

The task of every water chiller is to produce chilled water for use by the Air Handling Systems in the building. Typically this water temperature is 44F or 45F with a chiller rise of 10F to 12F.

A sensor is mounted in the chiller leaving chilled water line and the machine's controls monitor this temperature. The controls load or unload the machine's compressor in order to match machine capacity to building capacity.

The degree to which this is accomplished is a function of the type of compressor and it's ability to unload.

We will take a look at these issue in the pages that follow.

CAPACITY CONTROL

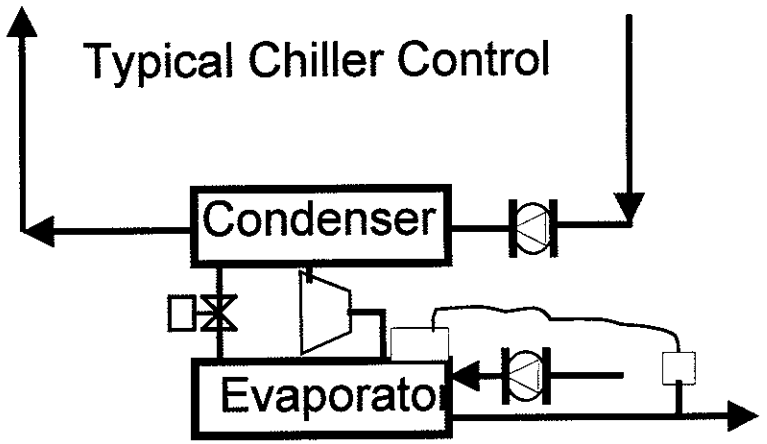

- **The purpose of all chillers:**
  - **Produce chilled water (typically 44F or 45F)**
- **Leaving chilled water temperature monitored**
- **Chiller controls unload compressor to match building load**
  - **Method varies by type of compressor**
- **We will explore each type**

RECIPROCATING UNLOADERS

As the load decreases, the leaving water temperature will decrease. This occurs because the chiller capacity will exceed the load it is serving. The controls sense this lowering temperature and cycle the compressor "on" and "off" the line to maintain the leaving water temperature within a predetermined range. The smaller this range, the more the compressor cycles. The lower the load, the more the compressor cycles. Since a typical air conditioning application will require operation at 50% load for a large number of hours during the year, a machine of this type will go through a great deal of compressor "on-off" cycles.

It is preferred to keep large capacity compressors on the line instead of cycling. Rapid cycling leads to compressor wear and shorter equipment life. Cylinder unloaders are therefore used to decrease compressor capacity without shutting the compressor off. Electric (as opposed to suction pressure unloaders) are used on reciprocating water chillers because the control of the unloading steps integrates so well into the electric and electronic control systems of the machine.

For chillers with one compressor, the machine could have either 4 or 6 active cylinders. Assuming our unit has a 6 cylinder compressor, the chiller could have three steps of capacity control – 100%, 67%, and 33%. Because the hermetic motor of the compressor is refrigerant cooled, the compressor cannot be 100% unloaded without shutting it off. The minimum unloading that can be accomplished in a hermetic compressor and still maintain adequate motor cooling is about 25%.

RECIPROCATING UNLOADERS

SUCTION CUTOFF UNLOADING

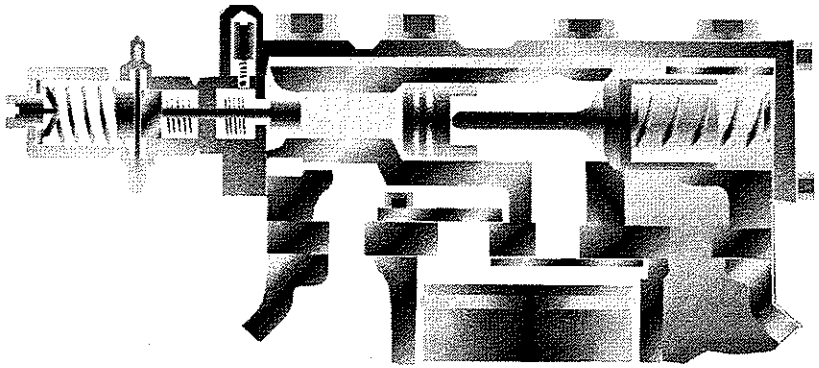

SUCTION BYPASS UNLOADING

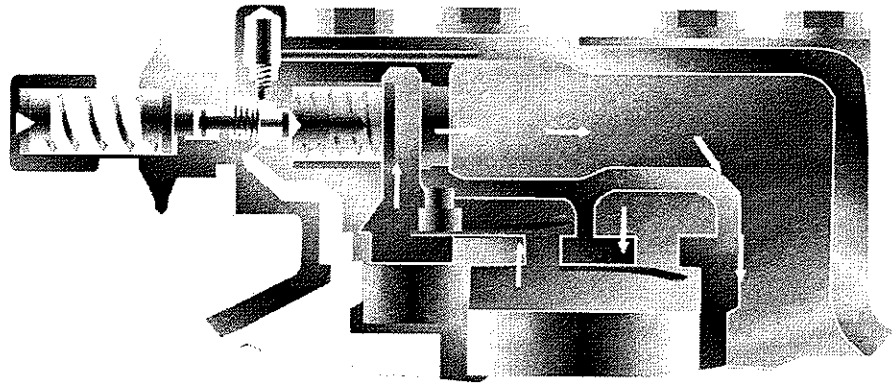

- **Suction cutoff**
  - Piston blocks suction intake of cylinder
  - No compression
- **Suction bypass**
  - Piston opens cylinder discharge to cylinder suction
  - No effective compression

MULTIPLE COMPRESSORS

As the rated capacity of the chiller increases, the compressor capacity must also increase. This can be done by using a single compressor with more cylinders, or by using multiple 6 cylinder compressors. Modern reciprocating water chillers tend to use multiple compressors because of machine stand-by capability and their lower cost of manufacturing. We'll talk more about stand-by capability later in the text.

If our chiller was to be equipped with four compressors – each having three steps of capacity control, the chiller would have 4 + 4 + 4 + 3 = 15 steps of loading without going off the line.

This degree of control sensitivity is really not required. Chillers tend to have from two to eight steps of unloading depending on the number of compressors used.

Let's take a look at the rest of the refrigeration cycle as the compressor chiller unloads through its 8 steps. As the compressors unload, the amount of refrigerant circulating through the system decreases. This lowers the velocity of the refrigerant through the cooler. If the velocity gets too low, oil will not be swept through the cooler tubes back to the compressor.

Also, the amount of flow passing through the TXV valve can be decreased below the minimum point of valve stability causing erratic valve operation and loss of superheat control. Unwanted liquid refrigerant may reach the compressor inlet when this occurs.

DUAL REFRIGERANT CIRCUITS

To avoid the lower refrigerant velocities, and minimum TXV loading, the cooler is split into two separate refrigerant circuits. Each circuit in the chiller contains two compressors, its own condenser, a TXV valve, filter drier, sight glass, and solenoid valve. At light loads (30 to 40%) one of the refrigeration circuits is deactivated, thereby raising both refrigerant velocity in the cooler and loading on the remaining TXV. Good oil return and TXV operation are thus assured.

MULTIPLE COMPRESSORS

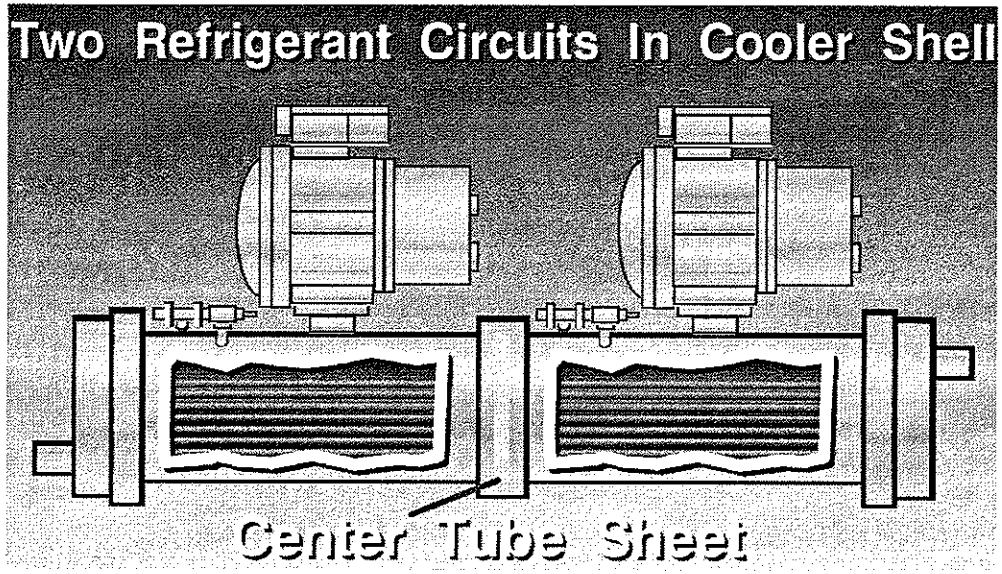

- **Additional unloading steps**
  - Multiple compressors (Up to 8 - typically 4 max.)
  - Up to 2 steps of unloading on each compressor
    - With two compressors, there are more steps
- **Two refrigerant circuits**
  - Better oil return and TXV performance at light load

CAPACITY CONTROL STEPS

Shown below, is the part load capability of a typical four compressor, two refrigerant circuit chiller. The chiller has 8 capacity steps and cylinder unloaders on one compressor in each refrigerant circuit.

Both refrigerant circuits are kept active for 7 of the 8 steps of unloading to get full use of the cooler and condenser surface and minimize compression ratios. The last step of control involves deactivation of one refrigerant circuit. The diagram also shows the use of a Transfer Switch (TRANS SW). The position of this switch dictates which compressor will unload first, and thus allows the machine operator to even up the operating hours on each refrigerant circuit. On units equipped with DDC controls this function is performed automatically by software monitoring the compressor usage.

Because the 4 compressor chiller has 2 distinct refrigerant circuits, the chiller can provide 50% stand-by capability should any component in one of the circuits fail.

The number of compressors used on each refrigerant circuit is not limited to two. A 200 ton capacity Air Cooled Reciprocating Chiller, for example, would have 4 compressors per refrigerant circuit – a total of 8 compressors in all.

However, one problem does exist with more than one compressor on a refrigerant circuit. When a compressor becomes inactive, the remaining operational compressors tend to pump the oil out of their crankcases into the crankcase of the inactive compressor. This could lead to nuisance low oil pressure shut downs. To eliminate this problem, crankcase equalizer lines are provided which connect the compressor crankcases together in parallel and allow the oil to migrate to where it is needed.

CAPACITY CONTROL STEPS

CAPACITY CONTROL STEPS

Unit	Contr Steps	TRANSFER SWITCH POSITION-1						TRANSFER SWITCH POSITION-2					
		% Cap.	Operating Cylinders					% Cap.	Operating Cylinders				
			Tot.	Ckt 1 Compr		Ckt 1 Compr			Tot.	Ckt 1 Compr		Ckt 1 Compr	
				1	2	3	4			1	2	3	4
140	1	19.0	4	x	x	4	x	19.0	4	x	x	x	x
	2	38.0	8	4	x	4	x	38.0	8	4	x	4	x
	3	47.6	10	4	x	6	x	47.6	10	4	x	6	x
	4	57.0	12	6	x	6	x	57.0	12	6	x	6	x
	5	69.0	16	6	6	4	x	69.0	16	6	6	4	x
	6	78.6	18	6	6	6	x	78.6	18	6	6	6	x
	7	90.4	22	6	6	4	6	90.4	22	6	6	4	6
	8	100.0	24	6	6	6	6	100.0	24	6	6	6	6

Only one compr. has cylinder unloaders

- **Typical (4) comp.(2) refrig. circuit chiller**
- **Eight capacity steps**
- **Both refrigerant circuits always active**
- **Transfer switch - even operating hours**
- **Oil migration to inactive compressors**
  - **Solve with crankcase equalizer lines**

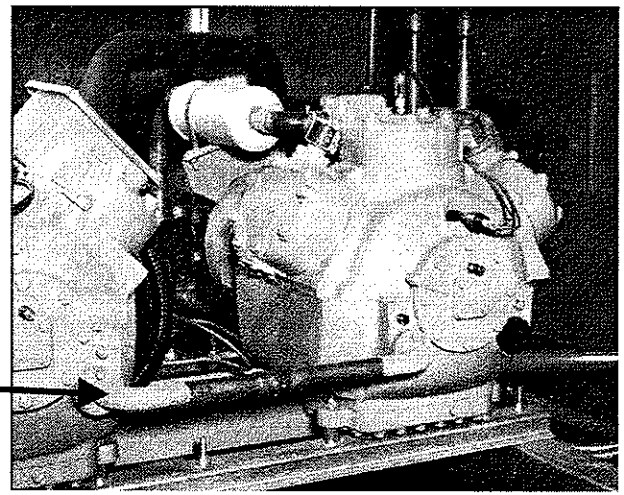

HOT GAS BYPASS

Chillers with four or less steps of control tend to have hot gas bypass as a control accessory. Chillers of this nature have 25% capacity as a minimum, and it is likely that the load they serve will fall below 25% for a considerable number of hours during the operating season. Hot gas bypasses will allow the compressor to remain on the line when loads fall below 25%.

The diagram below shows how this system works. At loads below 25%, the compressor capacity will exceed the flow of refrigerant allowed into the cooler by the TXV. Thus the compressor will tend to pull down the cooler suction pressure.

As the chiller controls call for further load reduction below the last step, the solenoid valve in the control line to the hot gas bypass valve opens. Cooler suction pressure is then transmitted to the control element of the HGBP valve. The valve is set for a predetermined suction pressure. When suction pressure falls below the set point, the HGBP valve opens – bypassing hot compressor discharge gas into the cooler liquid line inlet after the TXV. The hot gas mixes with refrigerant from the TXV to increase the volume of refrigerant flowing to the compressor. A side benefit of the hot gas flow through the cooler is an improvement of oil return to the compressor at loads less than 25%.

Since the refrigerant flow remains constant to the compressor, the cooler pressure stabilizes at the minimum set point and compressor power draw stays constant.

Chillers with greater than 4 steps of control are not typically available with hot gas bypass, since the larger number of control steps adequately covers the minimum load generally experienced on an air conditioning type application. Industrial process type applications might still require such a device, however, a careful look at adequate motor cooling would have to be made.

HOT GAS BYPASS

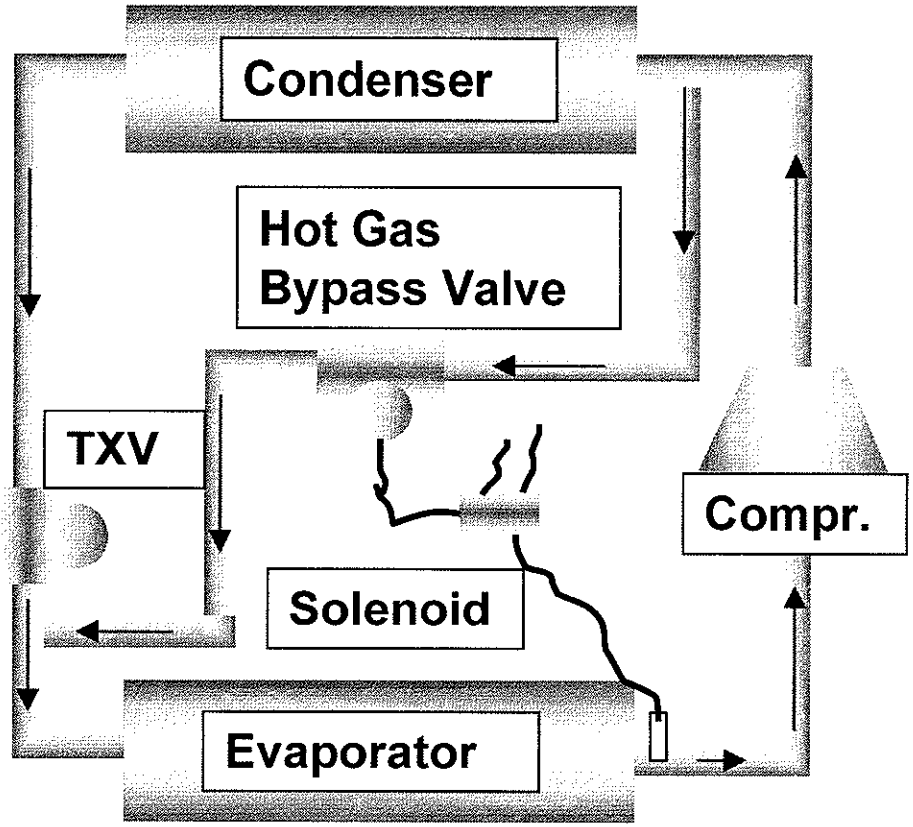

- Chillers with (4) steps of control
  - 25% minimum capacity
- Load will fall below 25%
- Evap. pressure falls when load < 25%
- Controls open solenoid
- Evap. pressure activates bypass valve
- Hot gas sent to evap. liquid line
- Evap. is false loaded

SCREW PART LOAD

The screw compressor is unloaded in a manner very similar to the reciprocating machine. There are two control options:
1- Piston Unloader
2- Slide Valve

The piston unloaders act very much like the reciprocating piston unloaders. In the screw each of two unloaders open a portion of the compression strake of the unit - back to the suction side. Thus, the amount of gas progressing through the whole screw compression stroke is reduced and capacity is reduced accordingly.

Some screw compressors have a slide valve. They do the same thing - allow a portion of the compressed gas to return to the suction side. The net effect is the same as the piston approach with one exception. The slide valve can be modulated to multiple positions and provides finer part load reduction.

SCREW PART LOAD

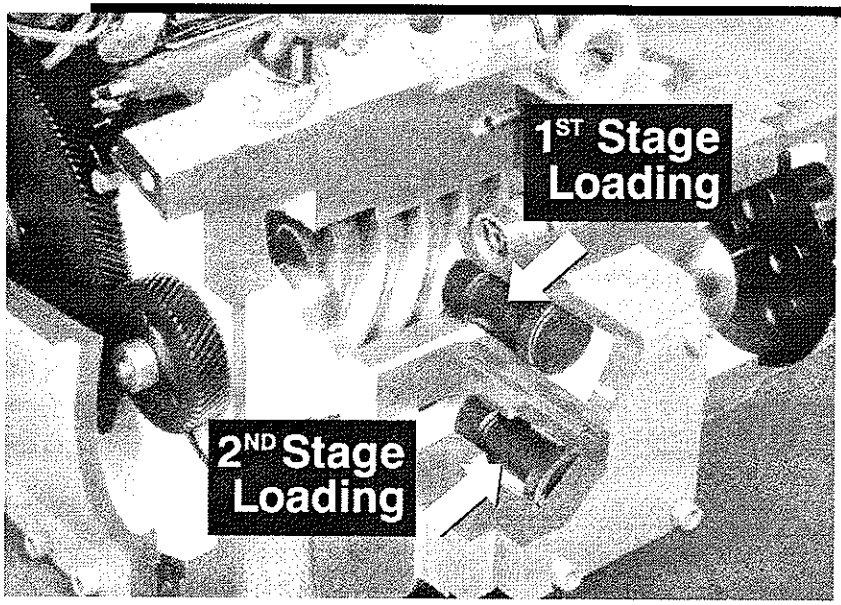

- Same as reciprocating compressor control
- Two unloaders
  - Bypass % discharge to suction
- Multiple compressors
- Dual refrigerant circuits
- Slide valve also option

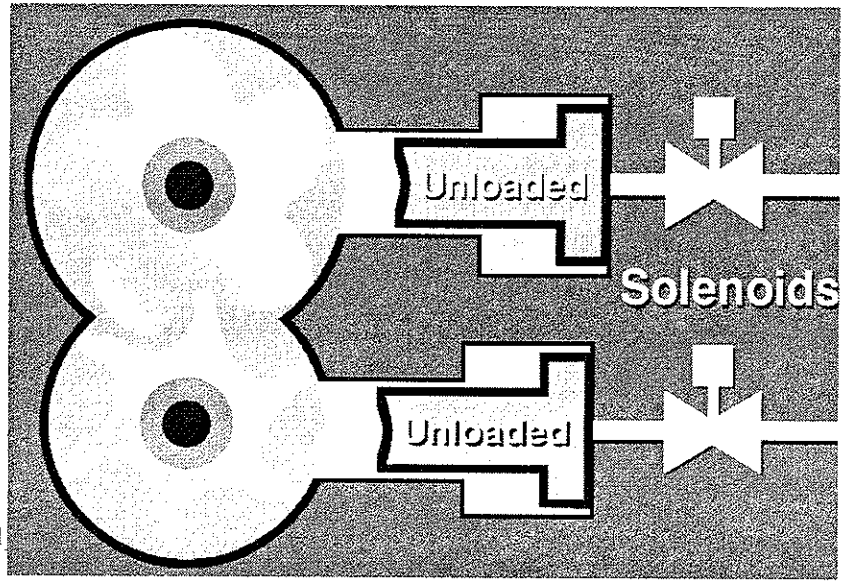

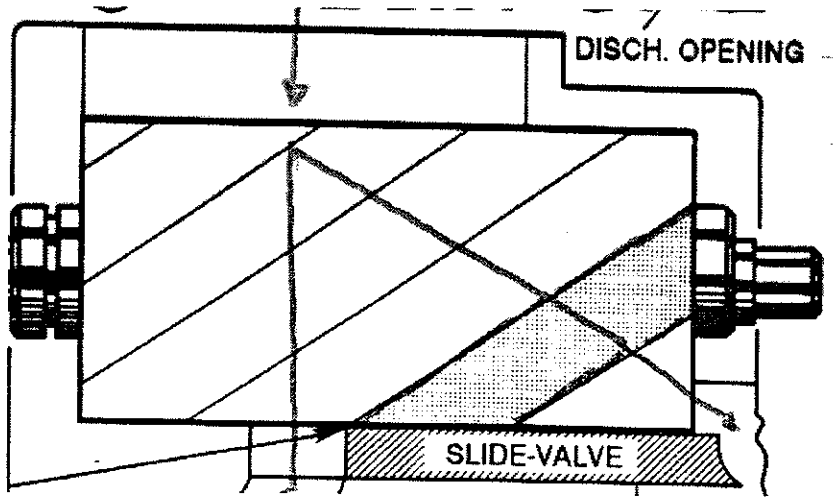

CENTRIFUGAL PART LOAD

The centrifugal chiller is equipped with a set of airfoil shaped blades located in the compressor inlet. They are called inlet guide vanes and they throttle the flow of gas into the compressor. The vanes also give a pre-whirl direction to the gas in the direction of the impeller rotation and alter the performance characteristic of the compressor itself.

The vanes are controlled by a series of pulleys wrapped with a wire cable. A motor moves the cable and thus all vanes simultaneously.

The vanes are modulated and thus provide smooth and precise control of refrigerant volume and thus machine capacity at part load.

The only exception to this is that the compressor may run into something called "surge" at part load. Surge is not associated with positive displacement compressors - only with the centrifugal.

Let's look at this phenomenon called surge in more detail.

CENTRIFUGAL PART LOAD

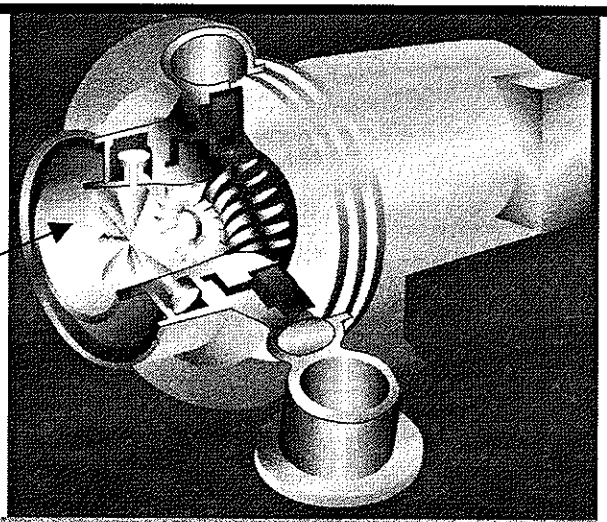

Suction Guide Vanes

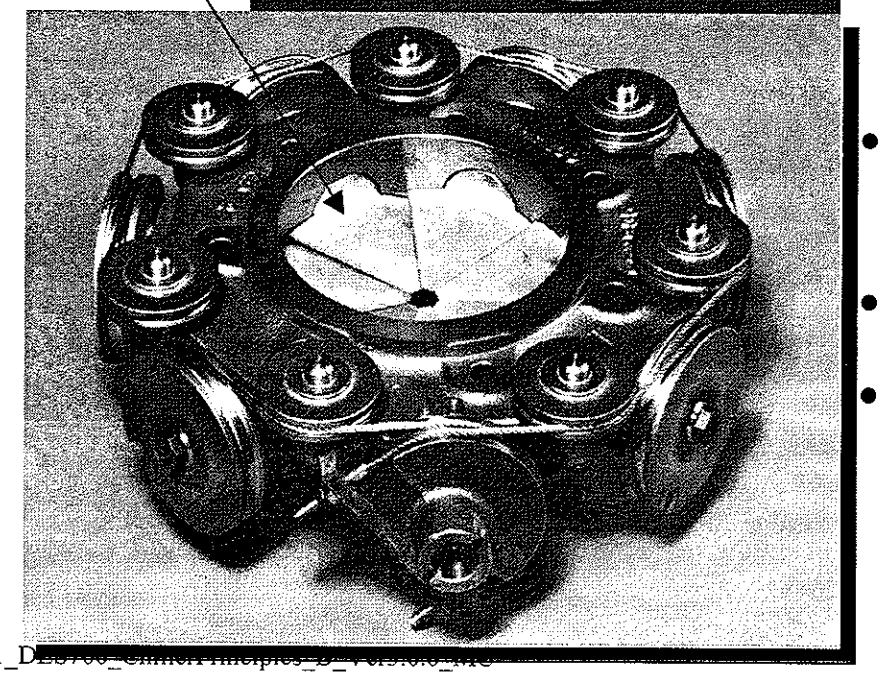

- Guide vanes located in compressor inlet
- Throttle flow to compressor
- Vanes also give pre-whirl to gas
  - Alter compressor performance characteristic
- Smooth modulating part load control
- Surge may be a problem
- Let's look more at surge

SURGE

As the loading, or the inlet volume flow rate, to the constant speed wheel is reduced while system head requirements remain high, a point is reached where surging occurs. Surge is caused by flow breakdown in the impeller passageways. When this happens, the impeller can no longer maintain the required system pressure, and a periodic partial or complete flow reversal through the impeller occurs. This is followed by a lowering of the required system pressure which allows the impeller to function normally again. The system pressure then builds up again until it exceeds the impeller capability, and the reversal of flow repeats itself.

The frequency of the cycle depends on the characteristic of the compressor and the system in which it operates. Surging is characterized by a marked increase in the operating noise level, and by wide fluctuations in discharge pressure. No detrimental mechanical effects are caused by a periodic, short duration of surging. However, prolonged periods of surge may damage the thrust bearing.

CENTRIFUGAL

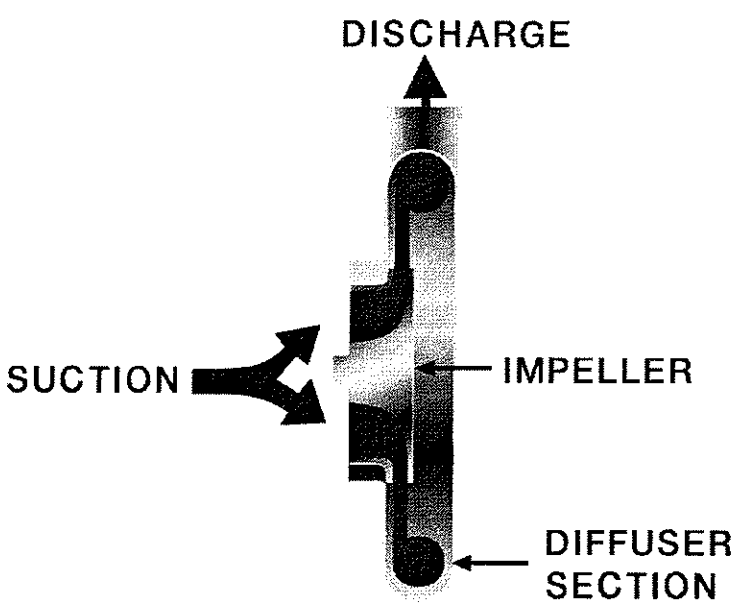

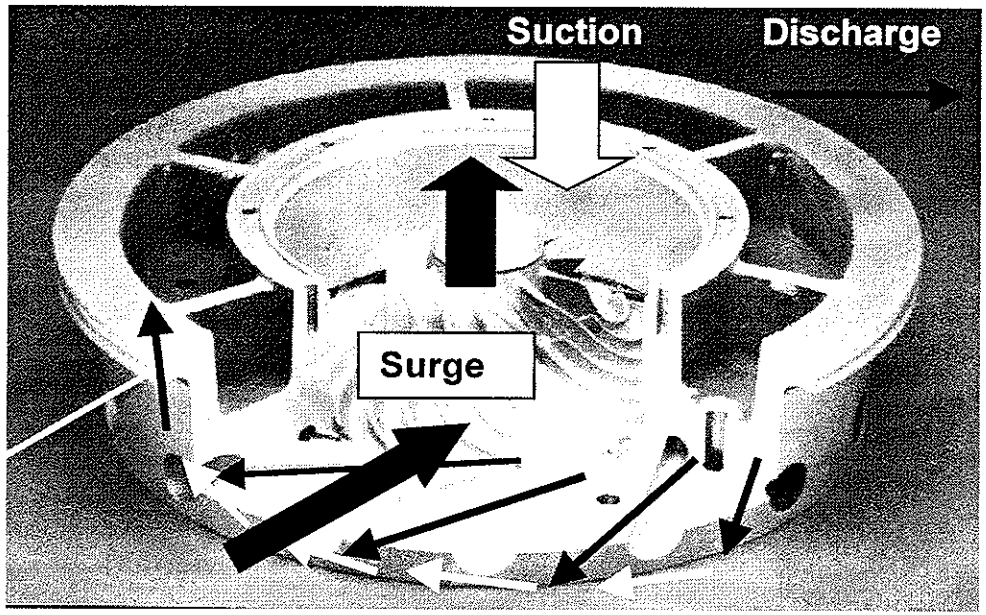

- Normally compressor pumps gas through diffuser
- At part load, flow through diffuser decreases
- If pressure across compressor remains high, flow reverses back through the diffuser channels
- For each vane position there is a surge point

COMPRESSOR CHARACTERISTIC

A centrifugal compressor has a flow versus head characteristic, somewhat like a centrifugal fan. Each setting of the guide vanes produces a new flow versus head characteristic.

Moving from right to left in the diagram below you can see guide vane positions moving toward the closed position. When fully closed the guide vanes still allow about 10% leakage - this representing the minimum compressor capacity - provided surge has not been encountered.

On the right side of the curve is where the compressor reaches "stonewall". When the velocity of the gas anywhere in the compressor exceeds the local sonic velocity, shock waves are created in the compressor and compression performance drops off rapidly.

COMPRESSOR MAP

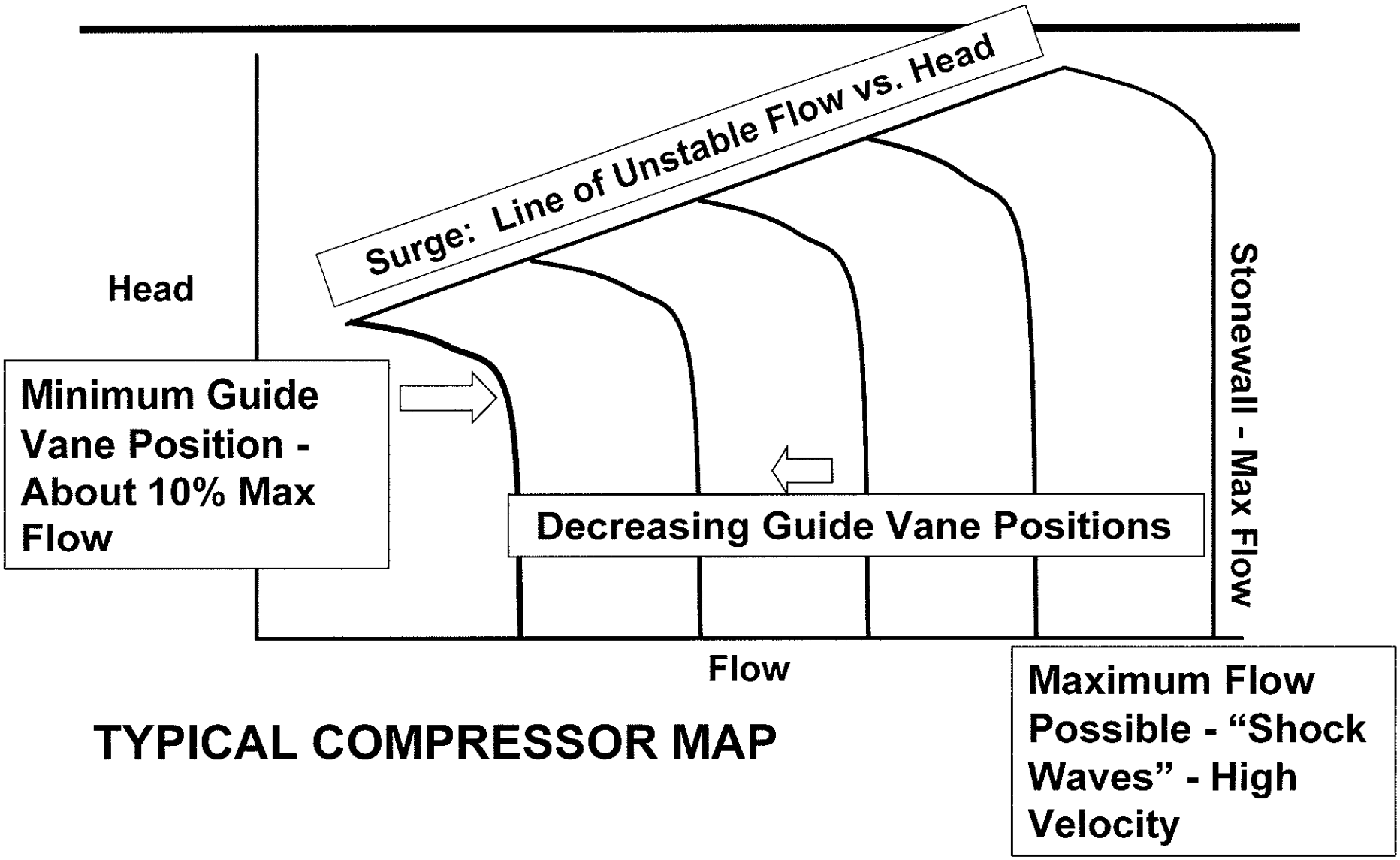

TYPICAL COMPRESSOR MAP

SYSTEM PERFORMANCE

When the refrigerant flow resistance (system characteristic) is superimposed on the compressor map, an interesting phenomenon can be seen.

If the condenser entering water temperature is held constant at design (say 85F), when the compressor guide vanes close to match building load, then the compressor system curve will drive the compressor into surge at about 40% part load. This is consistent with our previous understanding that the centrifugal compressor is not a high compression ratio device - particularly at part load.

However, if the controls allow the entering water temperature to fall 2.5F for every 110% drop in load, then the compressor remains stable at each guide vane setting all the way down to the closed vane position of 10% flow.

Clearly some means of condenser water control is a must with centrifugal equipment.

SYSTEM PERFORMANCE

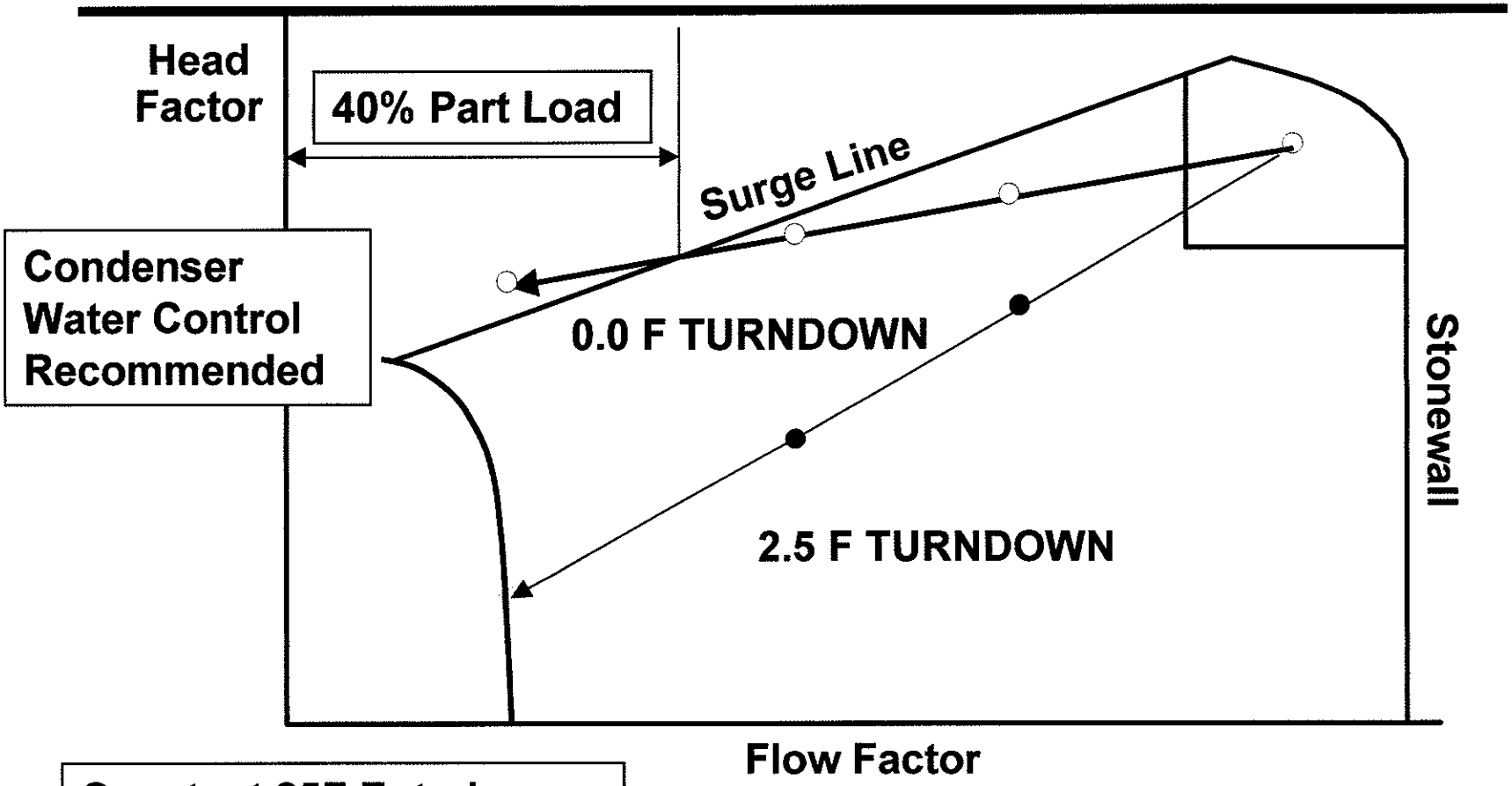

Constant 85F Entering Condenser Water: 40% Part Load

Allow Entering Condenser Water Temp to Drop (2.5F / 10% Load): 10% Part Load

SPLIT RING DIFFUSER

The centrifugal can be equipped with a part load device called a split ring diffuser. Literally, the diffuser is divided into two rings instead of the usual single one.

When load is reduced, the gas flow through the diffuser ring channels drops. Thus, the gas velocity in this area also drops. If head is sufficient, then surge takes place with flow reversal through the diffuser channel; back to the impeller.

With a split ring diffuser the controls sense the oncoming surge conditions and move the inner ring in such a way that the cross sectional area of the diffuser channel is reduced where the two rings come together. The local gas velocity increases and surge is avoided.

The resultant compressor performance can be seen on the following page.

SPLIT RING DIFFUSER

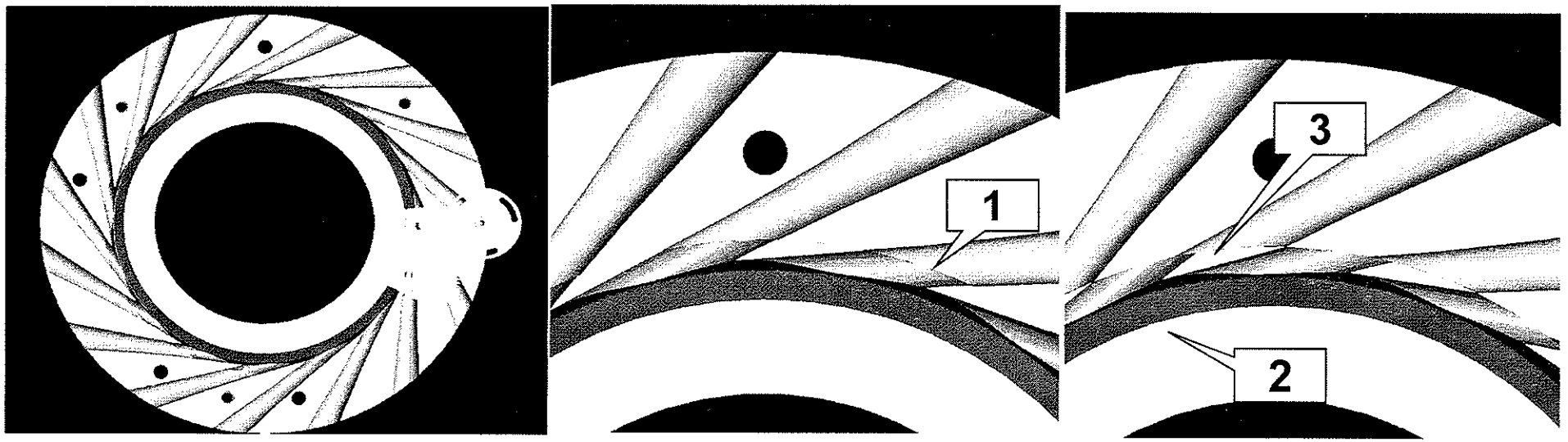

- Gas leaves impeller through channels
- If velocity in channels is too low, surge results
- Channel area is 100% at (1) - low velocity @ low flow
- Controls move inner section of split ring (2)
- Channel area decreased (3) - high velocity @ low load
  - No surge, stable compressor operation

SPLIT RING DIFFUSER

The impact of having a fixed diffuser or a split ring diffuser is shown on the next page. It can be seen that with the condenser entering water being held essentially constant, the compressor would surge.

Using the split ring diffuser dramatically improves compressor part load stability.

SPLIT RING DIFFUSER (SRD)

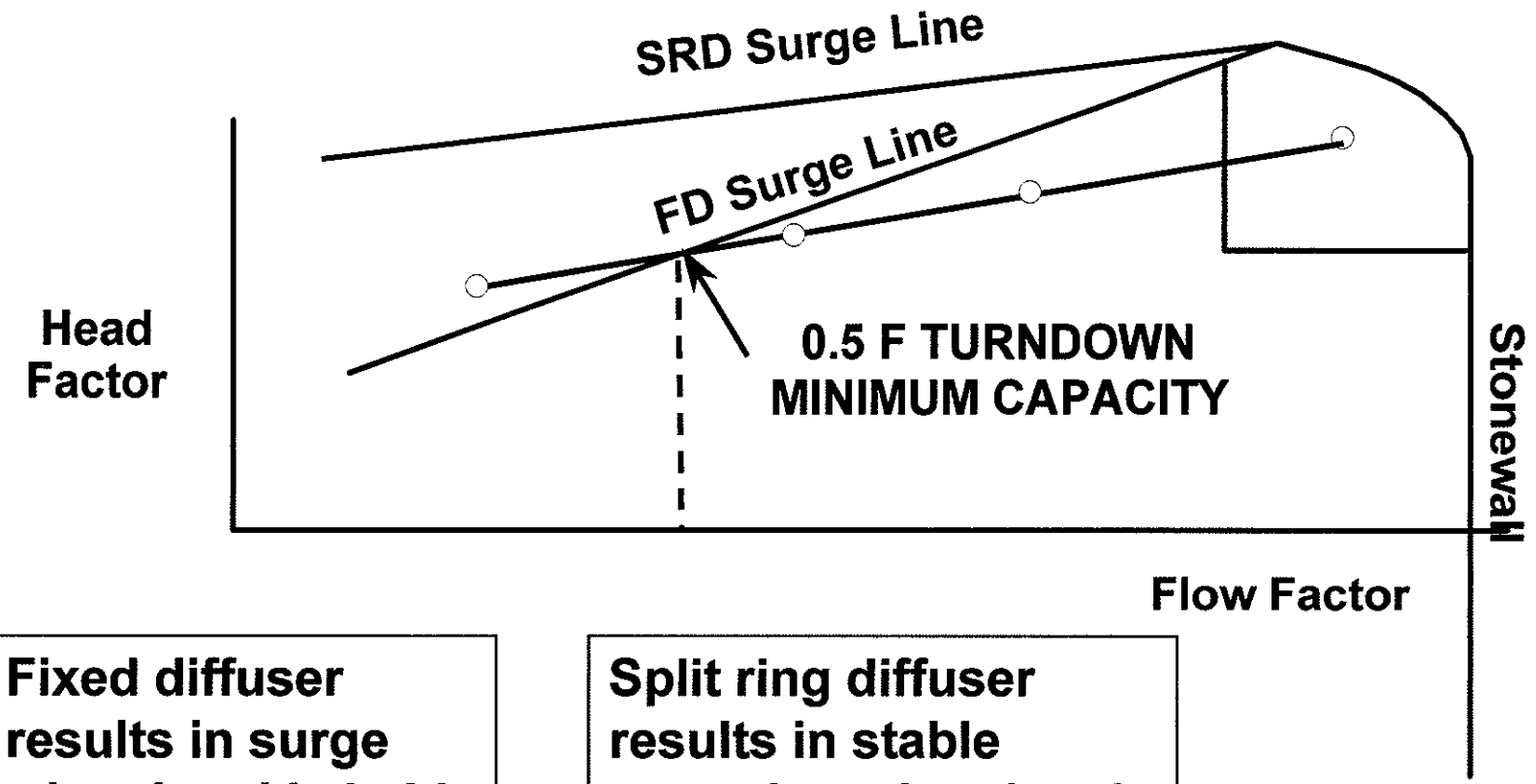

Fixed diffuser results in surge when head is held constant at part load

Split ring diffuser results in stable operation when head is held constant at part load



MISCELLANEOUS TOPICS

- Heat Exchanger Waterbox design
- Refrigerant Pumpout and Storage System
- Starters

WATERBOX DESIGN

The point where the chilled water piping connects to a water chiller is called a waterbox. Chiller waterboxes come in two basic designs:
1- Nozzle-in-head
2- Marine waterbox

The nozzle-in-head is by far the most widely used design. First of all, it is a standard on all small sized chillers (less than 1,000 tons) because it is inexpensive and makes the unit length smaller. Water piping is usually brought to the unit with a flanged 90 degree elbow just before the waterbox. Thus, it is a simple matter of removal of the flange when it is desired to open up the chiller and service the tubes.

In larger chillers the pipe size can be substantially larger and is usually welded - not flanged. For these systems it makes more sense to order the chiller with a marine waterbox - particularly for the condenser which needs annual cleaning. With a marine waterbox, the pipe is welded to the waterbox nozzle. Service of the tube bundle is accomplished by removal of the bolted-on waterbox cover.

WATERBOX DESIGN

Nozzle-In-Head

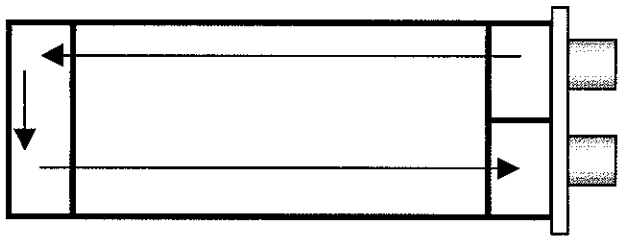

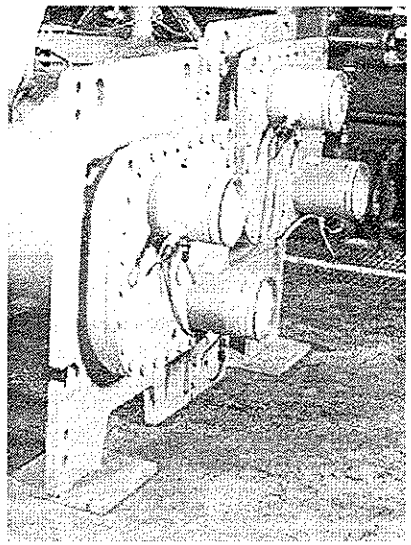

- **Nozzle-in-head**
  - Less costly
  - Smaller chillers
    - Small pipe sizes
    - 90 deg flanged elbow
  - Shorter unit

Marine Waterbox

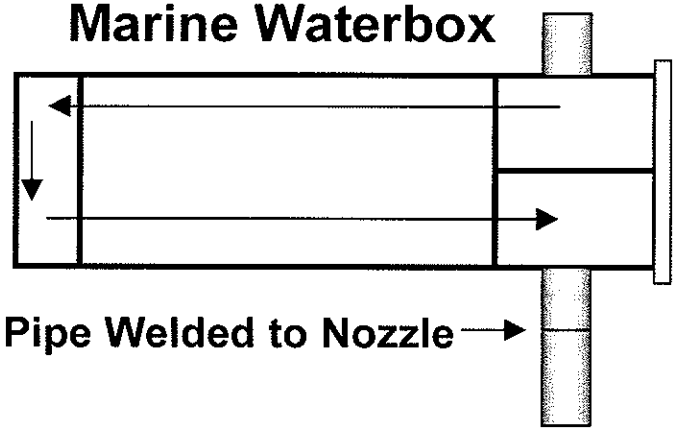

- **Marine Waterbox**
  - Pipe welded to nozzle
  - Clean tubes without removing field piping
    - Remove cover
  - Lower pressure drop
  - Larger chillers
    - Large pipe sizes

PUMPOUT AND STORAGE

High pressure refrigerants are the dominant choice in today's market for ecological and economic reasons. A high pressure refrigerant requires a high pressure on it at normal ambient conditions in order to stay a liquid. If a high pressure machine were to be opened to the atmosphere, the refrigerant would boil rapidly and soon be lost into the surrounding area.

This phenomenon has several negative results. First, the boiling refrigerant would freeze and burst the tubes in the chiller. Secondly, the refrigerant vapor could suffocate anyone in the room. Thirdly, there is a substantial amount of refrigerant in a chiller that would be lost and very expensive to replace. Also, the vapor would have a negative impact on the atmosphere and ozone level.

Thus, high pressure machines need to be equipped with a pumpout compressor and a place to store the refrigerant charge when the machine must be opened. The storage could be in a separate vessel, or the condenser of the machine could serve as the storage vessel.

When the condenser is the storage vessel, the machine needs to be supplied with isolation valves on the lines between the condenser and evaporator and the condenser and compressor. The black boxes on the diagram below indicate these isolation valves. The pumpout compressor is indicated by the large black arrow.

Many chillers are shipped to the job site with the refrigerant charge already stored in the condenser. In this case the chiller is automatically supplied with isolation valves which are opened as part of the process of starting the machine.

PUMPOUT AND STORAGE

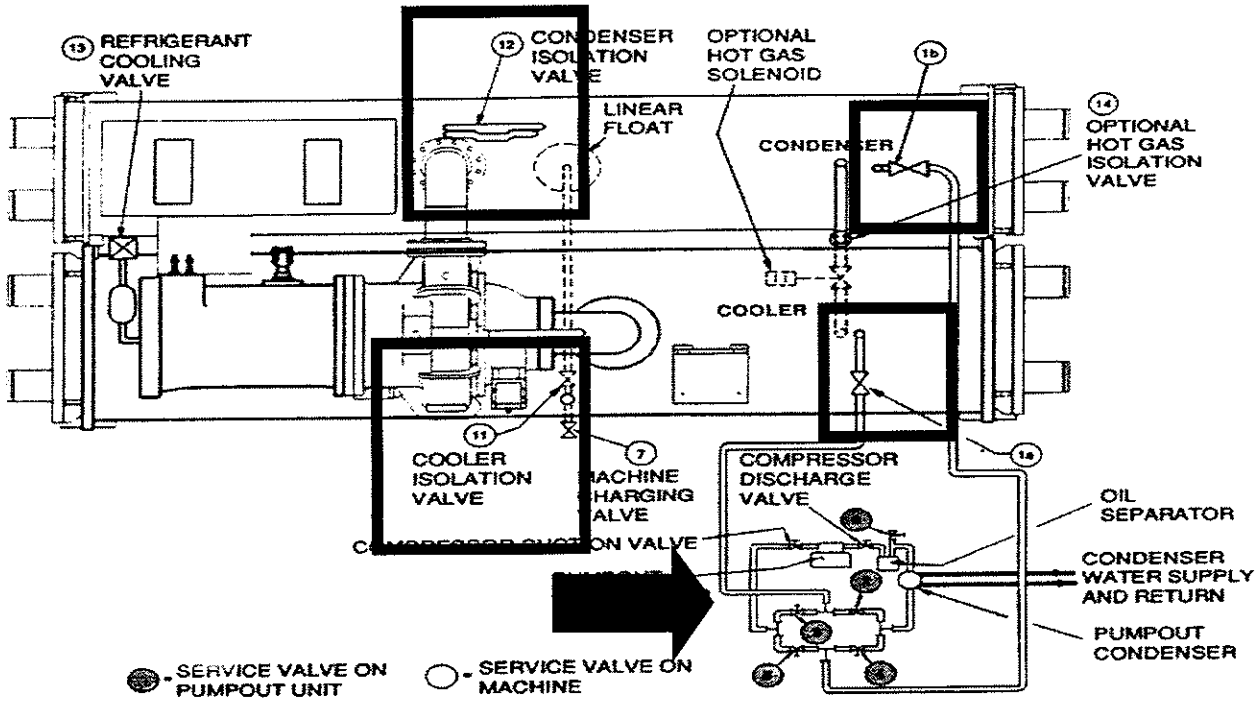

- High pressure refrigerants need to be stored when a chiller is opened up for service work
- Refrigerant will otherwise evaporate rapidly

- **Isolate refrigerant charge in the condenser**
  - Shipped from the factory
  - For service work on the machine
- **Unit from factory is typically equipped with isolation valves and optional pumpout compressor**

STARTERS

There are basically four types of starters used with motor driven centrifugal machines. These are shown below. Besides cost, the selection of a starter depends on many variables, most of which deal with potential electrical system disturbances and power company regulations.

Across-the-line:
Full voltage is the simplest and least expensive method. The motor locked rotor current is drawn directly from the line during starting. This provides the fastest acceleration of all methods of starting. This method is suitable for 600 or above volt motors.

Auto Transformer:
This method reduces inrush line current and starting torque by limiting the voltage applied to the motor. Its cost makes its use typically for voltages under 600 volts.

Primary Reactor:
This method also reduces inrush line current and starting torque by limiting the voltage applied to the motor. It is the most economical reduced voltage method above 600 volts.

Star-Delta:
This method reduces inrush current and torque by switching motor windings. It is the least costly and most used low voltage (under 600 volts) starting method. This method takes the longest time to bring the motor up to speed.

Solid State:
No discussion on starters would be complete without mention of the latest type-starting device introduced to the centrifugal industry. Its principle of operation utilizes a solid state device known as silicon controlled rectifier (SCR). The SCR is like an electronic valve, which allows a volume current to flow through it in response to a controlling electronic signal. Starting inrush current (unlike the other four methods discussed) starts at zero and builds progressively until the starting current of the motor is reached. In this manner, the starter supplies only enough voltage to overcome the motor starting torque requirement. The "soft start" has obvious attractive features in critically loaded electrical systems. However, the starter is considerably more expensive than the most popularly used methods; i.e., star delta and across the line.

STARTERS

- **Across-the line**
  - Full voltage & high current
  - Choice above 600 volts
  - Fastest acceleration
  - Used above 600 H.P.
- **Auto transformer**
  - Limits voltage & inrush
  - Primarily for low voltage
  - Varies torque to motor
- **Primary reactor**
  - Limits voltage & inrush
  - Least costly for high voltage
  - Least efficient
- **Star-delta**
  - Switches motor windings
    - Low inrush
    - Low starting torque
  - Least costly for low voltage
  - Choice under 600 volts
- **Solid state**
  - Silicon controlled rectifier
  - Varies voltage to change speed
  - Low inrush
  - Smooth acceleration
  - Gaining popularity

QUIZ

- This ends our presentation on water chillers
- Answer the quiz questions.
- The instructor will then review the answers with you.

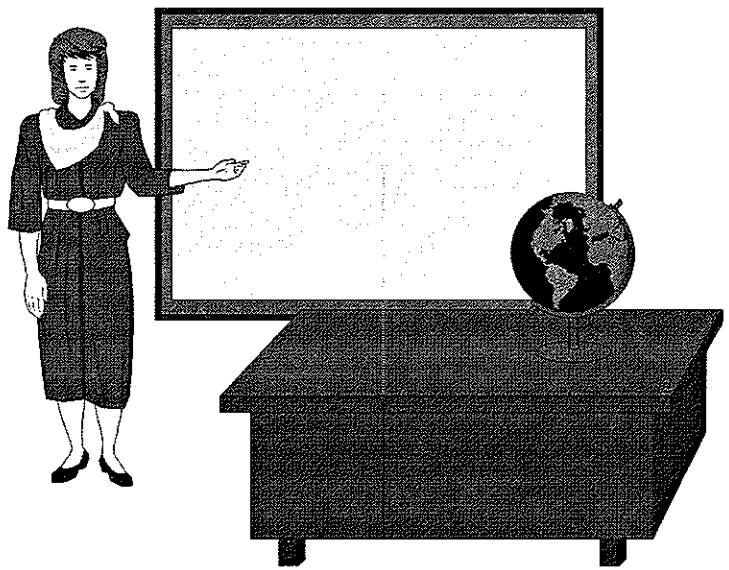

QUIZ

NAME: Guest Name for
DATE: 31 January 2012

1- Name three devices that will increase the refrigeration effect of a water chiller:

Flash Economizer
& condenser
Sub cooling.

2- What is the major benefit of an electronic expansion valve (EXV)? [illegible]
[illegible]
down 5°F to 3°F

3- Name the capacity ranges for each of these chillers:
Reciprocating: 15 to 100 tons
Screw: 75 to 750 tons
Centrifugal: 100 to 10,000 tons

4- Using the terms capacity and compression ratio, describe where each of these chillers best fit:
Reciprocating: Small capacities & high compression ratios
Screw: Medium capacities & high compression ratios
Centrifugal: Handles large capacities & low pressure ratio

5- What means are use to provide part load control for:
a) A Reciprocating Machine: [illegible]
Suction cut off ✗ Unloaders & Multiple compressors.
Suction bypass ✓
b) A Screw Machine: [illegible]:
Slide valve ✗ Unloader & Multiple compressor.
Slide valve
c) A Centrifugal Machine: Inlet guide vane & diffuser valve
Slide valve ✗ Inlet guide vanes & Split Flow Impeller.

6- When is hot gas bypass considered a viable means of part load control? [illegible]
- Most effective method to control on the
[illegible]
- [illegible]

7- What device improves the surge performance of a centrifugal at part load? [illegible]

Ans:-
a. For reciprocating [illegible] - with 4 steps of control.

END

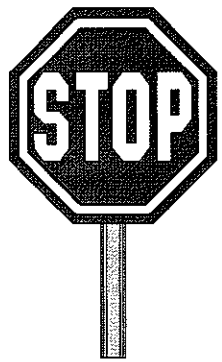

CHILLER PLANT

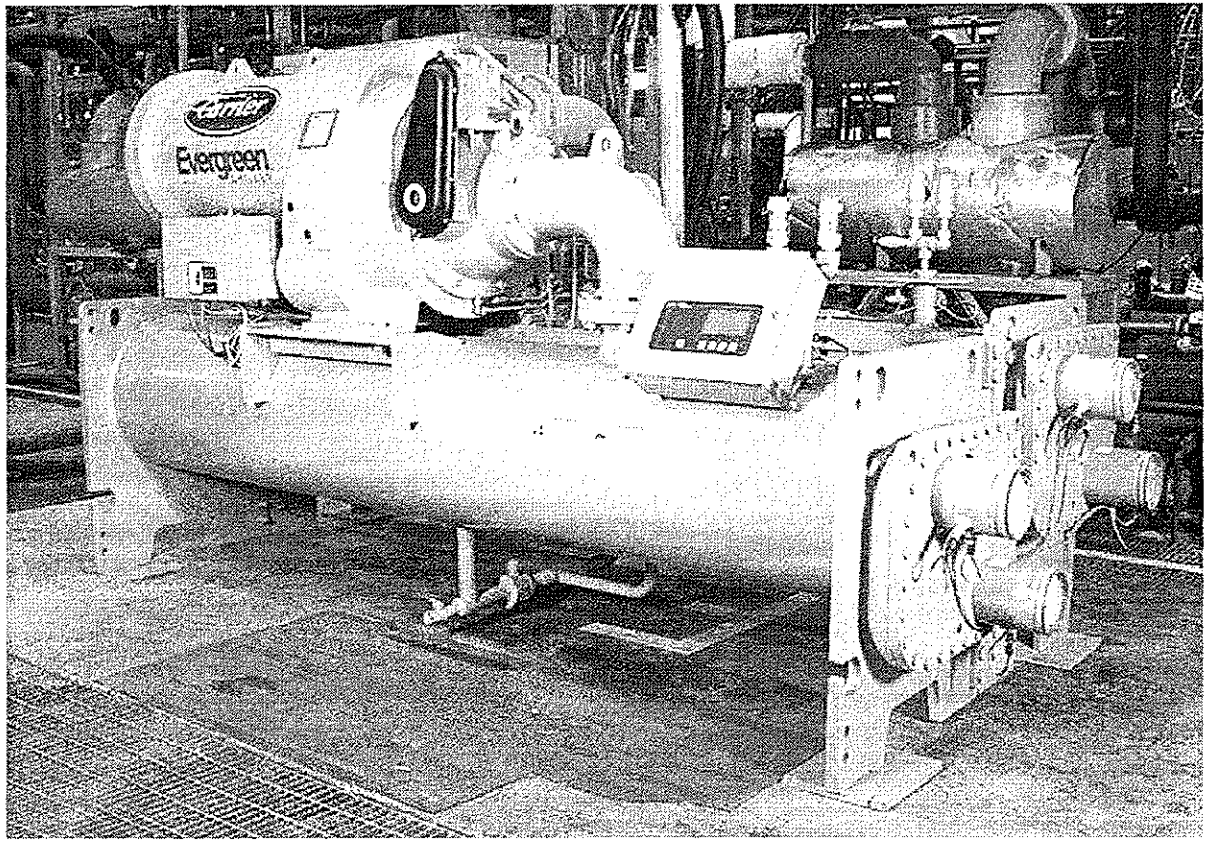

DES700

APPLIED WATER SYSTEM DESIGN

OBJECTIVES

Having explored the principles of water chillers we now need to take a look at combining them into a "Chiller Plant". The many choices about chiller piping and control arrangements, necessary to have multiple chillers operate together in a coordinated chiller plant, are covered in this section.

After completing this section you should be able to:

Module Objectives:

1- Understand the characteristics of a Chiller
    a) Response to variable evaporator flow
    B)Power consumption at full and part load
    C) How it is controlled
    D) Typical sequence of operation
2- Understand Multiple Chiller Applications
    a) Typical plant configurations
    b) When to choose Parallel versus Series Chillers
    c) How to maintain control of chiller flow
        * Coil 3-way Valve Bypass
        * Differential Bypass Line
        * Primary-Secondary Pumping Loops
3- How to integrate a Cooling Tower
    a) Apply a Tower Bypass Valve

OBJECTIVES

- **Understand the characteristics of a chiller**
  - Response to variable evaporator flow
  - Power consumption at full and part load
  - How it is controlled
  - Typical sequence of operation
- **Understand multiple chiller applications**
  - Typical plant configurations
  - When to choose parallel versus series chillers
  - How to maintain control of chiller flow
    - Coil 3-way valve bypass
    - Differential bypass line
    - Primary-secondary pumping loops
- **How to integrate a cooling tower**
  - When to apply a tower bypass valve

SIMPLE CHILLER PLANT
(SINGLE CHILLER)

The simplest of chiller plants is to have a single chiller to supply coils in the building with chilled water. The chiller may be air cooled or water cooled. Regardless of the condensing medium, this single chiller system has some characteristics that are shared by larger chiller plants with multiple chillers.

Those characteristics have to do with a chillers response to variable flow, the energy consumption pattern it has, how it is controlled, and its typical sequence of operation.

Let's begin by taking a look at these underlying principles.

SIMPLE CHILLER PLANT
(SINGLE CHILLER)

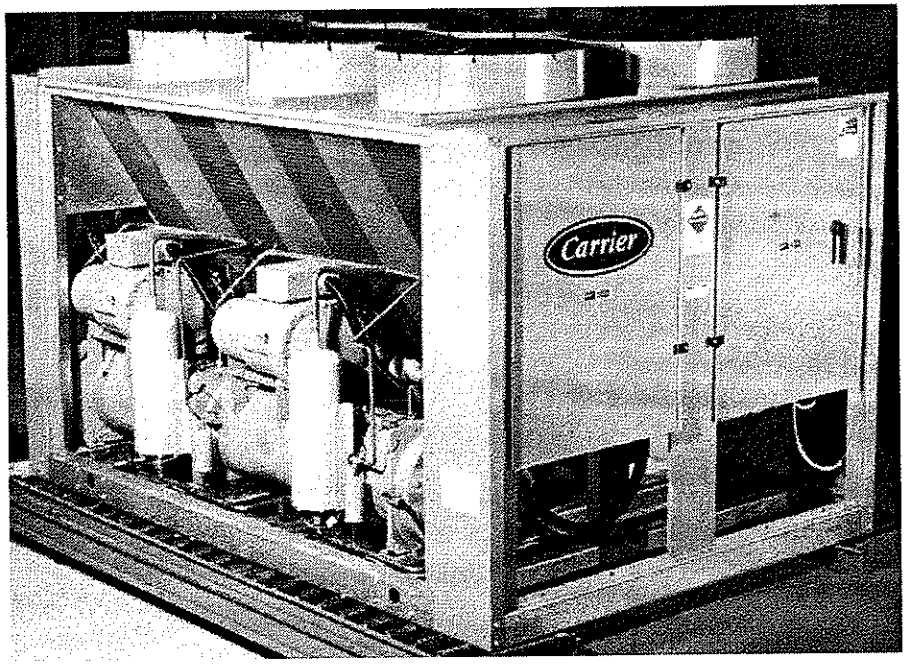

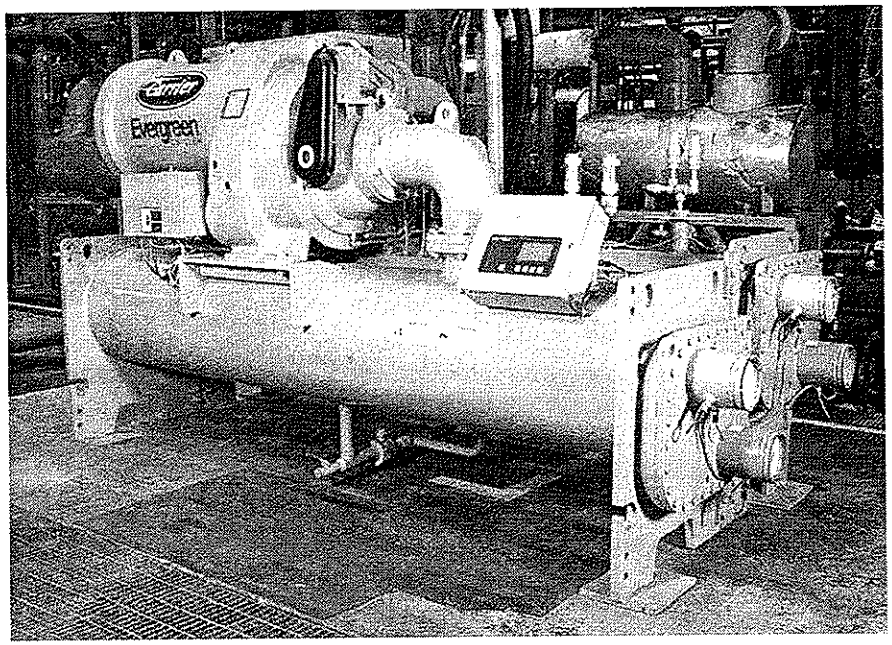

Let's explore:

- Response to variable water flow
- Energy consumption
- How chiller is controlled
- Typical sequence of operation

RESPONSE TO VARIABLE FLOW

Chillers are designed to operate with water velocities between 3 feet per second (fps) and 12 fps. In this velocity range, the flow through the tubes is turbulent and good, predictable heat transfer takes place. Below 3 fps the flow through the tubes becomes laminar and the heat exchanger performance becomes unpredictable and erratic. The chillers will operate erratically, and trip of the line occasionally.

Thus, the flow must be kept out of the laminar region to insure good reliable operation.

Although heat exchanger design dictates an upper limit of 12 fps, system design considers pressure drops. Thus, the designer will try and keep the pressure drop around 20 to 30 feet wg. Generally, this results in a tube velocity between 8 and 10 fps.

Thus , the % load that the chiller can expect to run into laminar flow will be between [(3/10) x 100] = 30% to [(3/8) x100] = 38%. Once again, the number of 40% jumps out. Thus, it is wise to keep chiller flow from falling below 40% to assure good reliable chiller operation.

RESPONSE TO VARIABLE FLOW

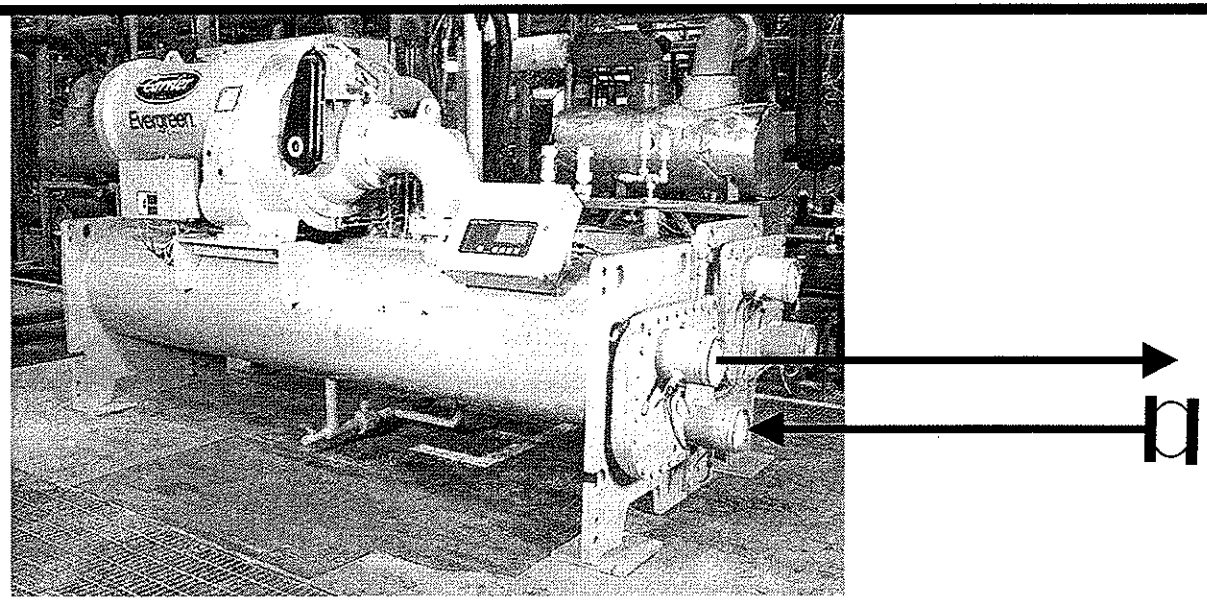

- **Chiller heat exchanger water velocity range**
  - **(3 < velocity < 12 feet per second)**
- **Typically sized for 8 to 10 fps**
- **Laminar flow & nuisance shut-downs below 3 fps**
  - **This represents (3/10) x 100 = 30% to (3/8) x100 = 38% flow**
- **Must keep flow to chiller above 40% typically**

ENERGY CONSUMPTION

The graph below contains the typical part load performance range for water chillers. Actual chiller performance varies from chiller manufacturer depending on chiller type and size. However, the final numbers should fall close to the range shown. This graph is representative and anyone doing an actual job would need to do an actual energy study with manufacturers providing part load performance for the specific chillers involved.

Having qualified the information shown, it can be seen that the most efficient operating point for chillers is at full load or slightly less than full load.

As the load drops on a chiller, its energy use also drops, but not in a linear manner. Chillers kw/ton tend to fall slightly until about 40% load and then rise rapidly. Thus, operating a chiller below 40% load is an inefficient proposition.

Another trend that can be found by studying manufacturers data is that smaller chillers tend to be less efficient then larger chillers. This is due to the general market forces which place a premium on first cost for smaller sized equipment. Customers investing in a larger more expensive piece of equipment are more likely to be interested in energy consumption.

Whether small or large, the chillers must work with the building load. The graph below shows a typical load distribution for a building. The chillers are sized for peak design conditions and the chillers will see this load for about 1% of the year. The bulk of the chillers operating hours will be between 30% and 80% building load. This leads to a simple conclusion.

Using multiple chillers is a far better way to produce an efficient chiller plant. Multiple chillers allow the machines to operate at or near their full load, and most efficient point, for a great deal of the time. Also, it is far easier to keep the chillers loaded above 40% where they are most efficient.

ENERGY CONSUMPTION

- Most efficient loading is at full load
- Kw/ton remains same down to 40% load
- Less efficient at part load
  - Kw/ton poor < 40%
- Small sizes less efficient than large sizes
- Sized for peak loads
- Building operates between 30% and 80% load most of year

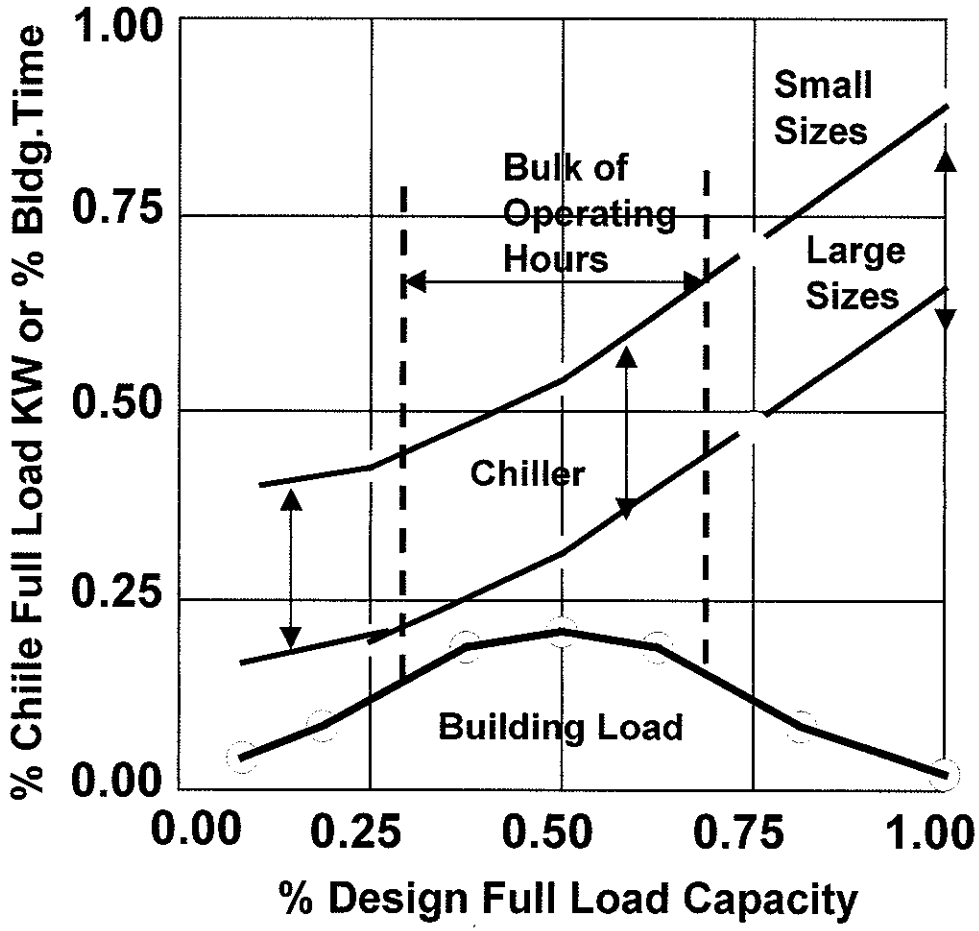

- Multiple Chillers- Good
  - Better overall efficiency
  - Stay above 40% chiller load

SINGLE CHILLER CONTROL

The diagram below shows a typical single chiller application. A single chilled water pump pumps water from the chiller to the coils in the building. The chiller monitors and maintains its leaving chilled water temperature (LCHW). Typically there will be a small number of air handler coils involved in a system of this nature.

The control valves on this system dictate the flow variation seen by the chiller. If 2-way valves are used the water will vary significantly and may fall below the minimum 40% level needed by the chillers. For this reason, constant bleed bypass lines are typically installed around the two way valves to assure the minimum chiller flow.

If 3-way valves are employed, then the chiller flow is constant and no part load energy pumping savings is possible.

Thus, this system typically employs 2-way valves with a single 3-way valve at the coil furthest from the chiller. The three way valve bypasses water when not needed by the coil. This bypass is sized for the minimum chiller flow of about 30 - 40%. In this case, with equal size coil loads, the bypass would be sized for 33% flow.

If the number of coils becomes significantly larger - indicating that the bypass line would be less than 30%, then another bypass type design is used. We will cover this shortly.

The pump itself must be supplied with a minimum flow. The pump bearings are normally cooled by the water passing through it. With no flow, the pump will overheat and damage the bearings.

The condenser side of the system would have a condenser water pump piped to a cooling tower or other source of water in a once through system.

Another consideration for this system is that it offers no backup capacity. If the chiller needs service or fails, building capacity is lost.

System Characteristics:

Low installed cost

Minimal part load turndown

- Chiller efficiency poor below 40%
- Chilled water flow must be kept above 40%
- Pump minimum flow required

No backup capacity

SINGLE CHILLER CONTROL

- Sensor in leaving chilled water line (LCHW)
  - Compression capacity varied to maintain LCHW
- Single chilled water pump started by chiller controls
- Coil control valves dictate chiller flow variation
  - Bypass line sized for minimum chiller flow (40%)

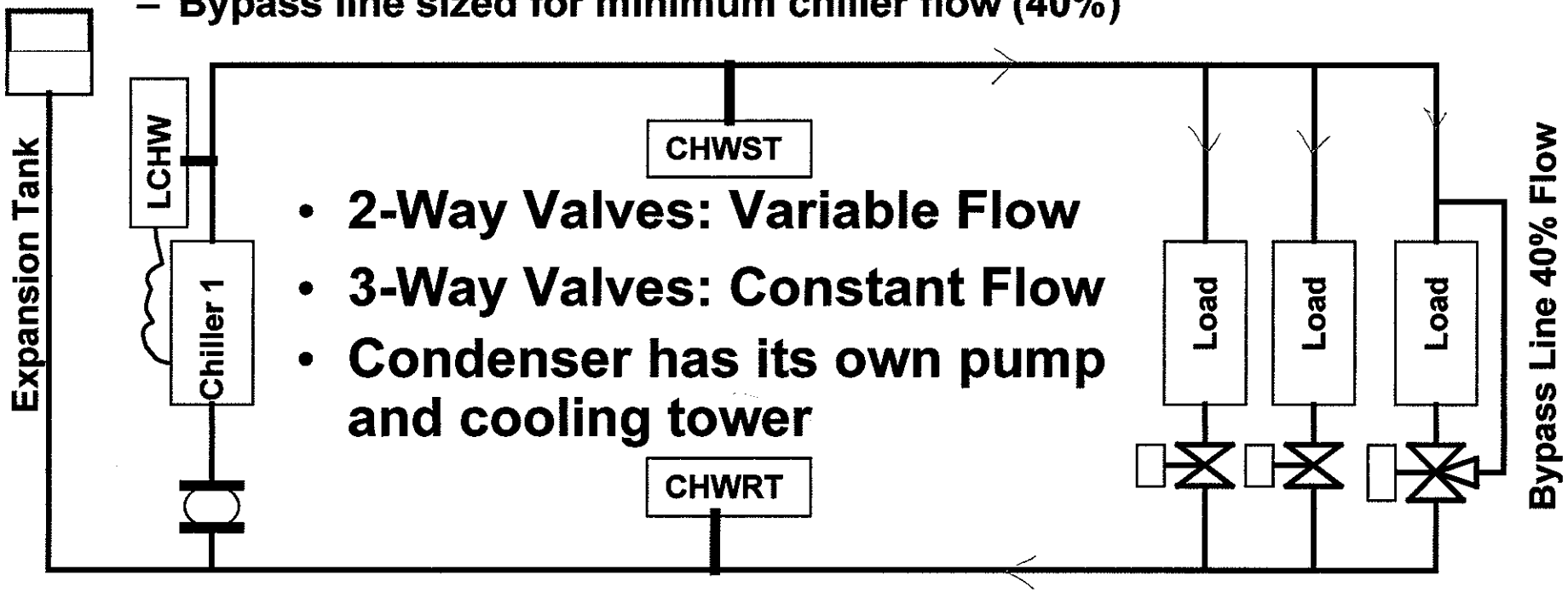

TYPICAL CONTROL SEQUENCE

Let's look at how the single chiller application is controlled.

The chiller controls start the chiller in response to its own internal timeclock or a set of external contacts. The controls go through a pre-start time-delay routine that checks all chiller safeties and provides positive oil pressure lubrication. Additionally, the pre-start routine starts the chilled and condenser water pumps through relays in the chiller starter. If the chiller is equipped with an isolation valve, the position of the valve (open/closed) is verified before starting the condenser pump.

Carrier recommends one chilled and condenser water pump for each chiller and that the pumps be started as indicated above for optimum protection for the chiller.

When the pre-start lubrication cycle is complete, the controls activate the pull-down cycle by adding the necessary compressor capacity to bring the chilled water temperature to setpoint. This is accomplished by controlling the inlet guide vanes on a centrifugal, the slide valve on a screw machine, or the stages of compression on reciprocating equipment. The controls monitor the rate at which the chilled water temperature is falling and activate only as much compressor capacity as necessary to bring the chilled water loop to temperature in a reasonable time.

Once the pull-down cycle has ended, the chiller increases or decreases compression capacity as needed to control the chilled water temperature at setpoint. All safeties are continuously monitored, and the chiller stopped if any should trip.

When the internal time clock or external start/stop contacts open, the controls will stop the chiller and activate a post-stop time delay and shutdown routine. During this cycle, rotary equipment (screw and centrifugal) will go through a coast-down lubrication cycle ensuring oil pressure to the bearings until the compressor comes to a complete stop. Reciprocating equipment goes through a pump-down cycle. The oil crankcase heaters are also activated to minimize refrigerant absorption by the oil during shutdown.

TYPICAL CHILLER CONTROL SEQUENCE

- Start based on internal or external timeclock
- Pre-start routine initiated
  - Check safeties
  - Shut off crankcase heater and starts oil pump
  - Start chilled water and condenser water pumps
- Enters pull-down cycle
  - Slows rate of adding chiller capacity
  - Brings chilled water loop to setpoint
- Enters normal control
  - Adds or removes capacity as needed to meet building load
    - Monitors safeties - shut down if necessary
- Stop chiller based on internal or external timeclock
  - Coast down lubrication and activates crankcase heater
  - Activate delay time between starts

SINGLE LOOP - TWO CHILLERS

The most popular chilled water plant arrangement involves two chillers. A great deal of buildings are supplied with this chiller plant arrangement. Shown below, are two chillers arranged in parallel. Each chiller is supplied with its own chilled water pump. The chiller pump is activated when the chiller is activated, and check valves prevent an active chiller pump from pumping water backward through the inactive chiller.

The remainder of the chilled water system design remains the same as we have just covered with one chiller.

A system of this type can provide significant chiller and pump part load energy savings. Since a typical building's load pattern bulks between 30% and 80% - peaking at 50%, operating two chillers affords a better match of chiller capacity to building load. The pumping energy follows likewise.

Thus, the main question faced when employing two chillers is, should the evaporators be piped in parallel or should they be piped in series.

Much discussion and many studies have been centered around this discussion. Which is more efficient? Which offers better plant operation and serviceability?

SINGLE LOOP - TWO CHILLERS

- Two equal sized chillers (50% building capacity)
- Each has its own pump
  - Cycles with chiller activation
  - Check valves prevent back flow through idle chiller
- Excellent part load chiller and pumping energy

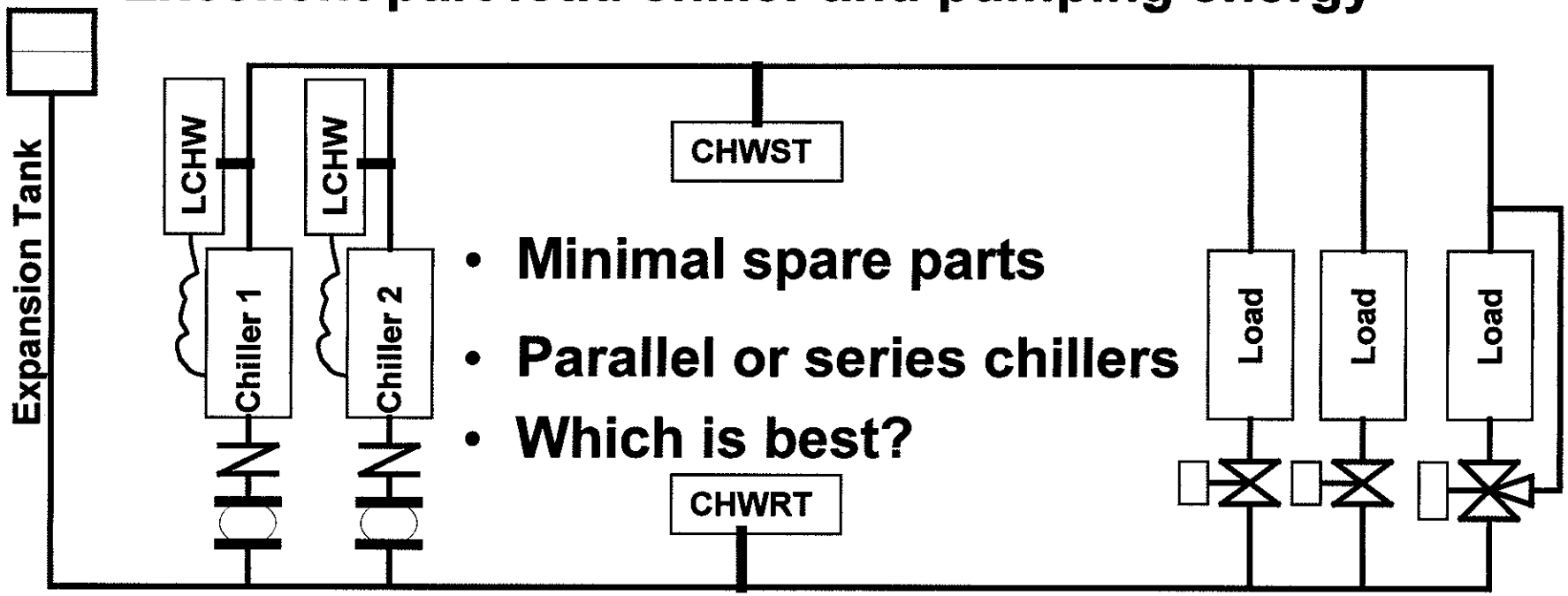

- Minimal spare parts
- Parallel or series chillers
- Which is best?

SERIES VERSUS PARALLEL THEORY

(Parallel Condenser Flow)

The diagram below shows two chillers piped in series (left side), compared to two chillers piped in parallel (right side). All condensers are assumed to be piped in parallel - all having the same condenser pressure drop and pumping energy. Both chillers have 2-pass evaporators and 2-pass condensers.

The two parallel machines operate against the same lift and unload in parallel as the building load drops. The evaporator pressure drops are each about 20 ft wg.

The theory behind placing the chillers in series is that chiller "A" would be able to operate at a lower lift and thereby save energy compared to the parallel arrangement. This would be true if the two series chillers could keep the same pass arrangements with the same pumping pressure drops.

However, the reality of switching the chillers into a series configuration, is that with a two pass arrangement, each chiller would now have to handle twice the flow. The tube velocity would double and the pressure drop rise by four times. Clearly an 80 ft wg pressure drop would not be acceptable.

In order to bring the pressure drop back to reasonable levels, the pass arrangements must be dropped to 1-pass. A I-pass evaporator will have a lower saturated evaporator temperature (SET) than a 2-pass version. Thus, the low side chiller's SET will be lower than the parallel chillers.

With the same condenser performance as the parallel chillers, chiller B will be overall less efficient than chillers C or D.

Chiller A operates at a higher chilled water temperature than chillers C & D, and even with a 1-pass evaporator chiller A's SET will be higher than chillers C & D.

Combining chillers A & B together, however, results in an overall energy use that would be about the same as chillers C & D together.

The only savings might be from the slightly smaller pumping horsepower chillers A & B might enjoy from the 1-pass, high-rise, arrangement.

In the end the comparison is a wash from an energy point of view.

The argument doesn't stop here, though. Wouldn't the series arrangement offer a better energy result if the condensers were to be piped in a series counter-flow arrangement?

SERIES VERSUS PARALLEL THEORY

(Assumes all chillers piped with parallel condensers)

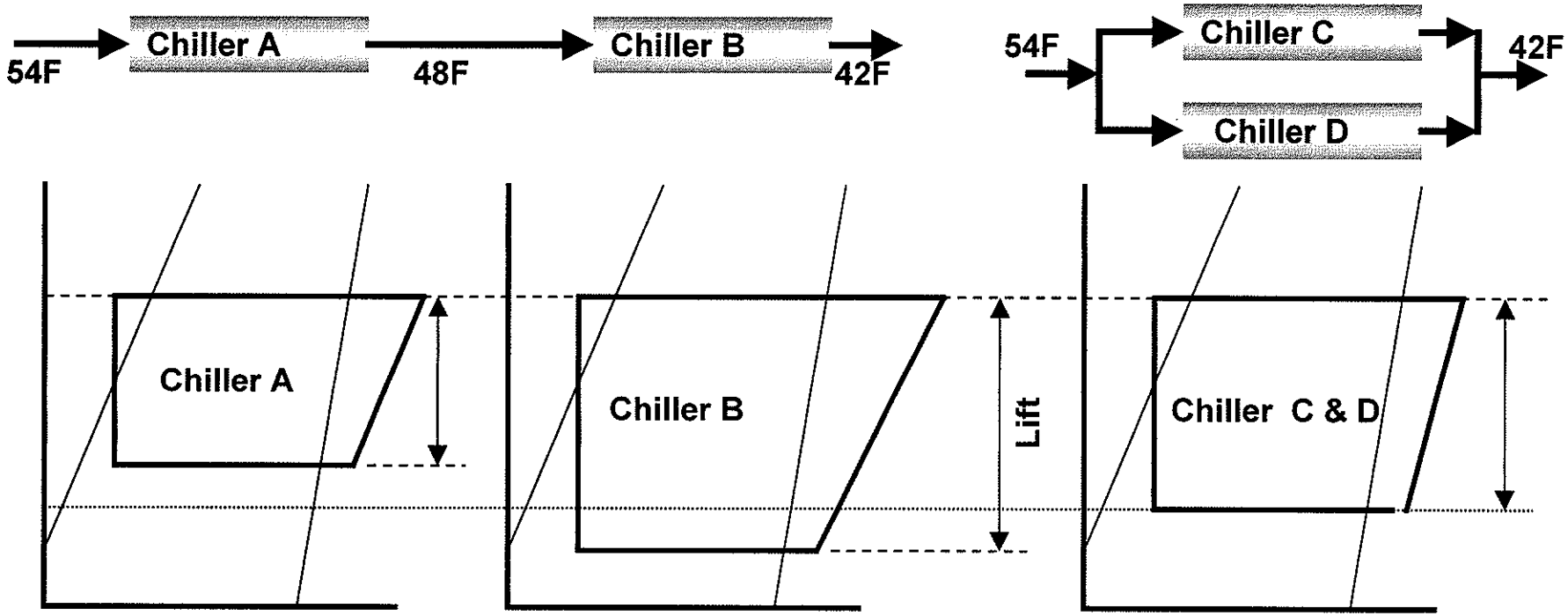

- **Must reduce pressure drop**
  - 2 pass Condr, 1-pass Evap
- **Energy balances**
- **Both Chillers**
  - 2 pass Condensers
  - 2 pass Evaporators
- **Both Chillers: Same lift**

SERIES VERSUS PARALLEL THEORY

(Series machines: Counter-flow Condenser Flow)

In the diagram below, the best possible scenario for the series arrangement is made. The condensers are piped in a counter-flow arrangement to the evaporators.

The reality of trying to pass all the condenser water flow through the condensers results in the same problem encountered in the evaporators of chillers A & B. The normal pressure drop of 20 ft wg would become 80 ft wg. Thus, like the evaporators, the condensers must become 1-pass in order to keep the condenser pressure drop reasonable. When this is done, the condenser Saturated Condensing Temperatures for chillers A & B increase over what their parallel versions are.

Once again, both chillers A & B tend to compare equally with chillers C & D due to the 1-pass arrangement versus the 2-pass arrangements. Overall, both systems consume about the same amount of energy.

SERIES VERSUS PARALLEL THEORY

(Assumes Series Counter-flow Condensers)

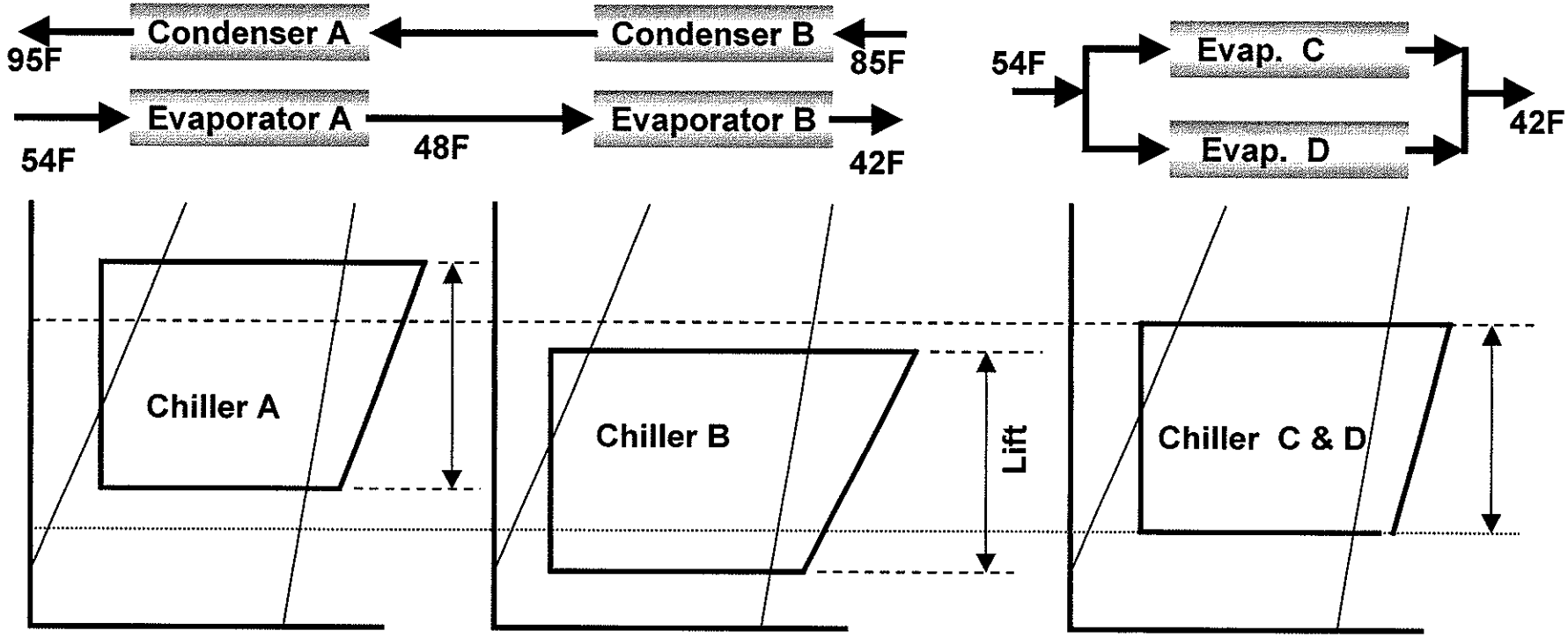

- **Must reduce pressure drop**
  - 1 pass Condr, 1-pass Evap
- **Energy balances**
- **Both Chillers**
  - 2 pass Condensers
  - 2 pass Evaporators
- **Both Chillers: Same Lift**

SERIES - PARALLEL STUDY

The page below shows the actual energy study done for a series versus parallel chiller arrangement. The best possible series arrangement pitted against the typical parallel arrangement. The study was based on two 500 ton chillers with 54F to 42F chilled water and 85F to 95F condenser water.

As expected, the compressor energy turns out to slightly favor the series arrangement (491 versus 510). The pumping energy, however, favors the parallel chillers (41.3 total head versus 64.3 total head).

In the overall analysis, the two systems turn out to be about even when it comes to saving energy.

The choice between the two systems must therefore be based on other considerations. Let's see what those are. To begin with, let's look at the piping arrangement of two chillers in series.

SERIES VERSUS PARALLEL ENERGY STUDY
(2) 400 Ton Chillers
Series -Counter Flow, Coolers and Condensers

	(2) 400 Ton Series	(2) 400 Ton Par.
Tons	416+384 = 800	400 X 2 = 800
KWI	256+335 = 491 ⇦	255 X 2 = 510
KW / Ton	0.61	0.64
Delta P Cooler	17+17.3 = 34.3	17.6
Delta P Condenser	17+17.3 = 34.3	23.7 ⇦

Overall energy use about the same

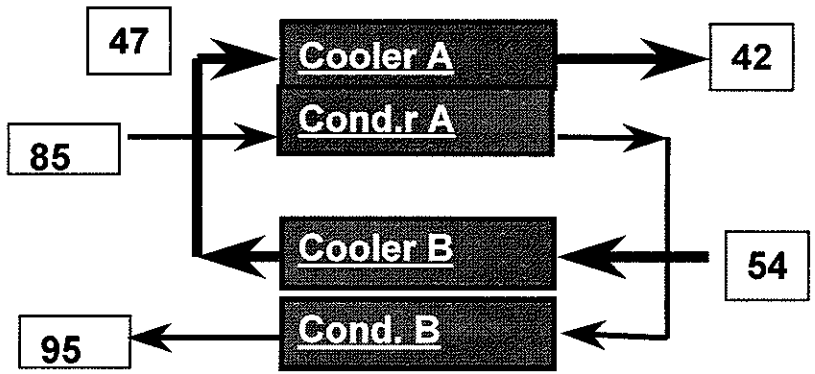

(2) 400 Ton Series

(2) 400 Ton Parallel

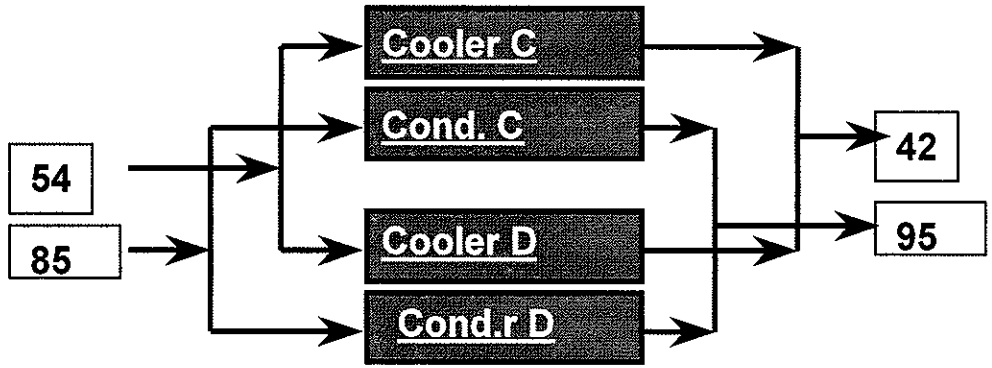

TWO CHILLERS IN SERIES

When the two chillers are piped in series, both chillers leaving chilled water sensors (LCHW) must be located downstream of the last machine. Experience has shown that in this configuration both chillers will share the load equally.

If each chiller had its LCHW located in its own leaving line, the upstream chiller would attempt to always be fully loaded, and leave the downstream chiller to handle what ever shortfall in load might exist. This is not the most efficient way to operate the chillers.

The second significant consideration is that both chillers require bypass lines for service considerations. The bypass lines must be sized at 50% system flow and equal to the chiller pressure drop.

Thus, this arrangement requires more piping than a parallel chiller arrangement.

However, the most significant consideration is what to do if you ever want to expand the chiller plant. Putting three chillers in series is not practical from an operational or a piping point of view.

Clearly, the parallel arrangement facilitates plant expansion.

TWO CHILLERS - SERIES

- **Locate both chillers control sensors as shown**
  - **Both chillers share load equally**
- **Provide chiller bypass lines with service valves**
  - **Size for 50% flow - full chiller bypass**

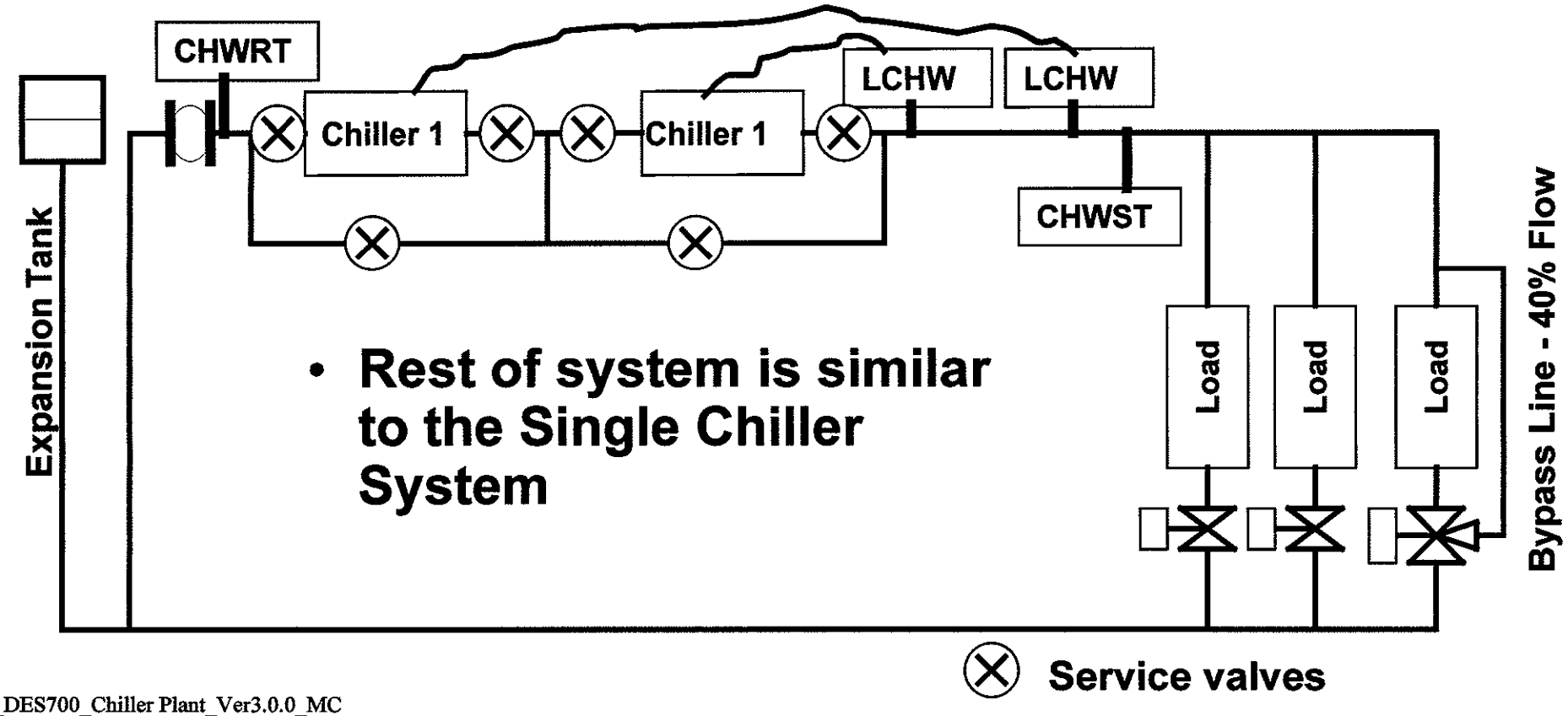

- **Rest of system is similar to the Single Chiller System**

PLANT EXPANSION

Clearly, it is easier to add an additional chiller when all chillers are piped in parallel. The piping modifications are simple, and the coordination of controls is also simple.

PLANT EXPANSION

- **Parallel chiller arrangement favors plant expansion**
  - **Easy to pipe**
  - **Easy to coordinate operation and control**
- **Parallel chiller arrangement is very popular**

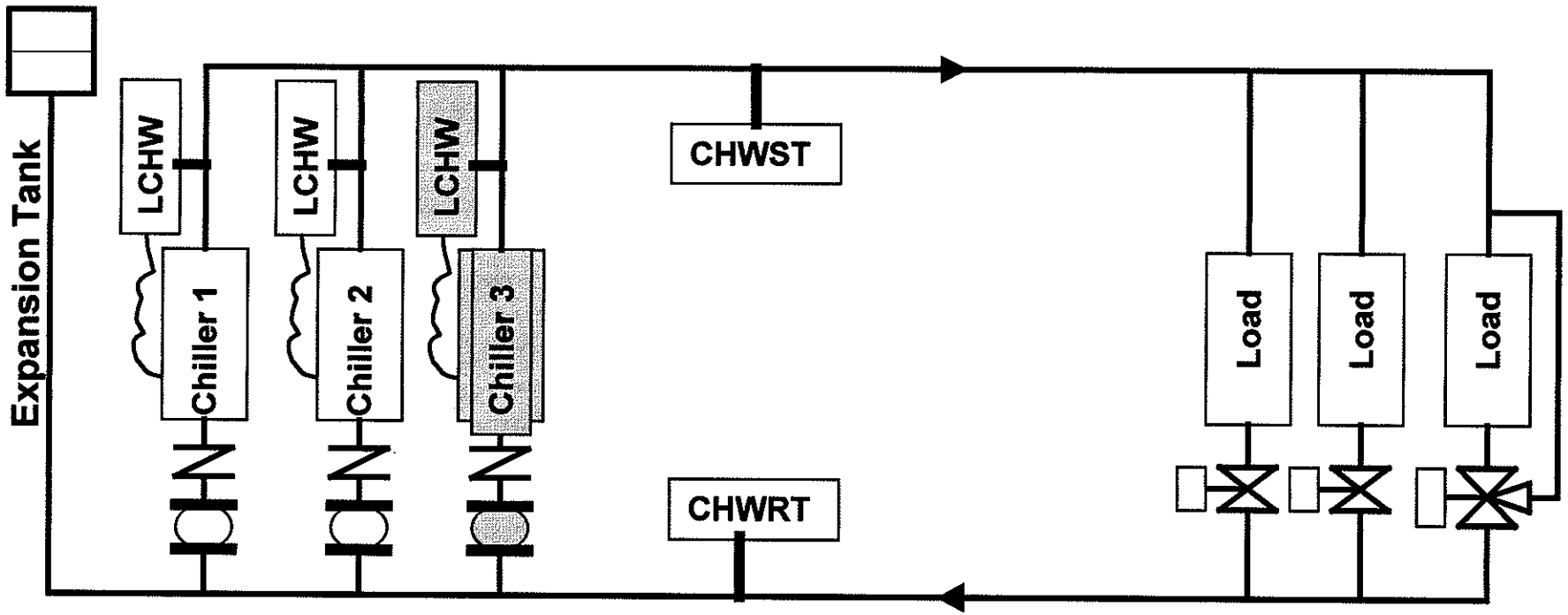

DIFFERENTIAL BYPASS

An alternative approach to ensuring minimal chiller and pump flow is to provide a differential bypass valve and line between the chillers and the load.

This method gives more precise control over the chiller flow. The bypass line should be located as far downstream as possible before the loads in order to maintain as much as possible of the piping system under a constant pressure drop. This constants pressure drop ensures constant chiller flow and stable chiller operation.

With this system, all coils can have 2-way valve control.

The bypass valve is controlled by maintaining a target pressure drop across the supply and return headers. As the two way valves controlling the loads throttle, the the system pressure drop will increase. The pressure difference across the headers will increase. The bypass valve control senses the rise in header pressure differential and bypasses water from the supply back to the return. Thus, the chiller flow remains constant.

DIFFERENTIAL BYPASS

- **Bypass maintains constant header differential**
- **Locate bypass and sensors as far downstream as possible**
  - **Maximize portion of piping under constant pressure**
  - **Constant chiller flow**

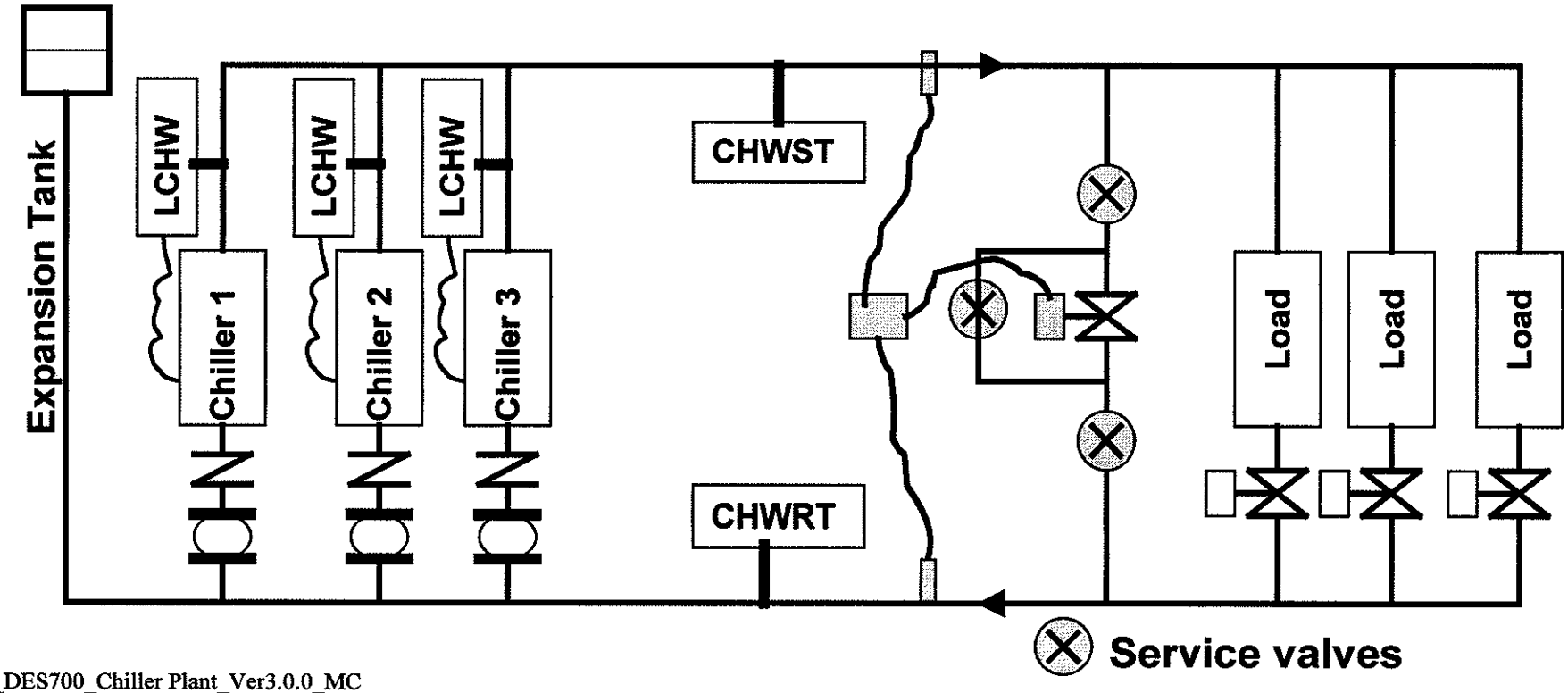

PARALLEL PUMPS

Some engineers prefer to locate all chilled water pumps in a single location in a parallel piping arrangement. This offers the capability of easily providing an extra standby pump.

This type of arrangement lends itself to equal sized pumps to match equal sized chillers. Each chiller control panel can still activate an individual pump dedicated to it - just as if the pumps were not in a "ganged" configuration.

Automatic isolation valves are required for each chiller and matched to a coordinated pump. This prevents water from being circulated backward through an inactive chiller.

With 2-way coil valve control, the farthest coil must be provided with a 3-way valve and a bypass line sized for minimum chiller flow to protect the chillers and pumps.

This pumping system is **not recommended when unequal sized chillers are installed** - particularly if the method of control could result in a mismatch of pumping and chiller capacity. Chiller operational problems would result. The Murphy Law principle dictates that at some point this, would occur.

PARALLEL PUMPS

- Easy to provide pump standby (extra pump)
- Recommended for equal sized chillers
  - Each chiller starts/stops its own pump
- Automatic isolation valves needed at chillers
- 3-way bypass valve needed

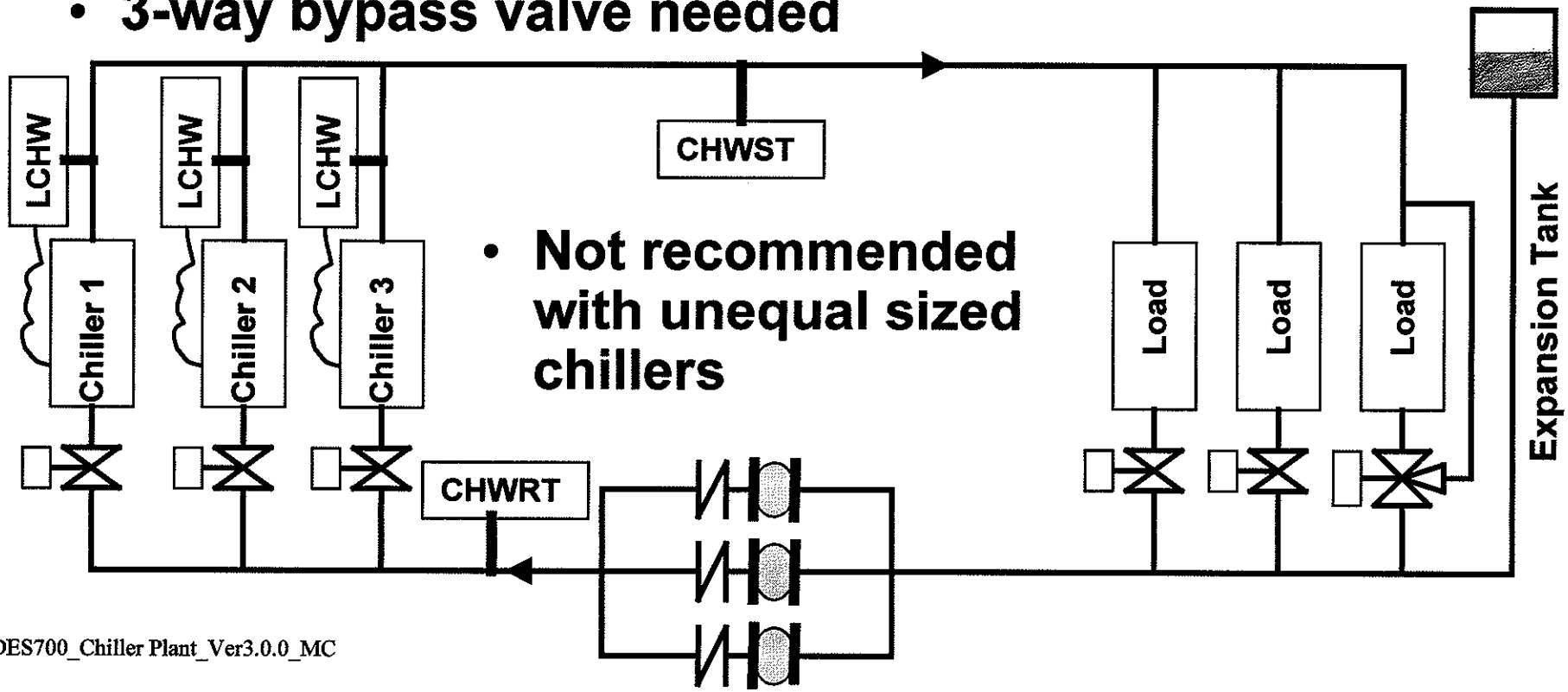

- Not recommended with unequal sized chillers

PRIMARY SECONDARY PUMPS

Another common approach to maintaining chiller flow while taking advantage of variable load flow pumping savings is the use of primary-secondary pumping.

In this arrangement, each chiller in the primary loop starts/stops with its chiller. Chiller flow is maintained constant by water circulating through the chillers and back through the "hydraulic decoupler line".

2-way control valves are used on the coils on the load side of the system. A secondary pumping station provides chilled water to the coils. The pump station is usually a lead-lag pump arrangement with only one pump operating at any one point in time. This provides standby and equalizes pump operating hours. Check valves are needed for each secondary pump to prevent water circulating backward through the idle secondary pump.

As the coil control valves close off, less water is pumped through the secondary circuit and the secondary loop pressure rises. This would normally mean that the primary pumps would be starved of water. However, the flow not needed by the secondary pumps flows from top to bottom and returns to the primary pumps - insuring a constant primary loop flow.

In order not to dead head the secondary pump, a bleed line or 3-way valve and bypass is provided at the end of the secondary loop. The bypass is sized for the minimum pump flow and is therefore a smaller line size than if no secondary loop had been used.

During startup conditions, the coil control valves will all go wide open and the secondary pump will pump more than the design flow provided by the primary loop. Now water flows the opposite way in the hydraulic decoupler line. The extra water not needed by the primary loop passes from bottom to top in the diagram and back to the secondary pump. Once again, the primary pumping flow remains constant.

The decoupler line is sized for the flow rate required by the largest chiller.

An alternative control method would be to use a variable speed drive on the secondary pump to match secondary pump flow to coil load flow demand.

PRIMARY SECONDARY PUMPS

- **Secondary pumping station**
  - One pump active, the other standby (lead-lag)
  - Matches secondary flow to coil loads
  - Coil bypass line to match minimum secondary pump flow
- **Decoupler maintains constant primary flow**

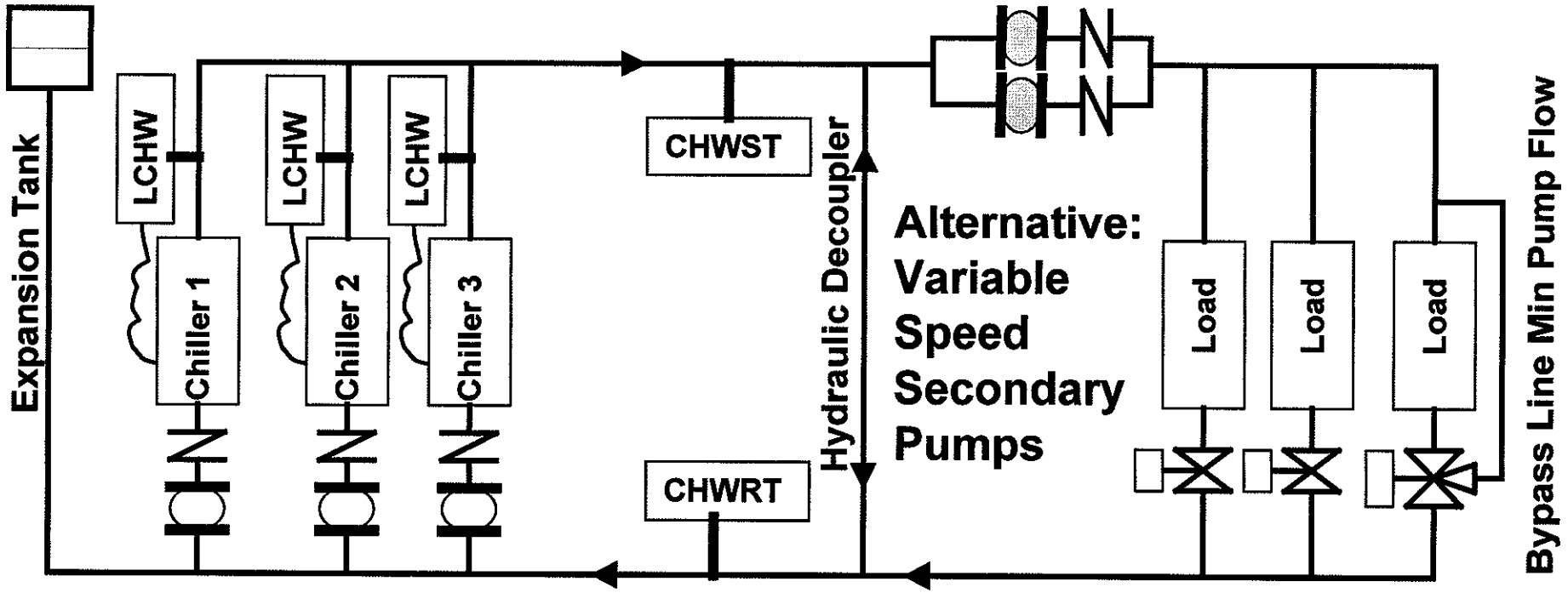

COOLING TOWER

The condenser circuit for the chiller plant is shown below. A cooling tower is piped to parallel chiller condensers. Flow passes through all tower cells whenever any chiller runs.

Each condenser has a dedicated pump that is started by the individual chiller controls. The controls also monitor the return tower water flow switch - assuring flow to the condenser. This switch is wired into the chillers safety circuit.

A separate controller is required for the cooling tower. The controller typically varies air flow through the tower to maintain a temperature returning to the condensers. This is done by cycling tower fans or switching them from high to low speed (2 speed fans). One tower fan may be a variable speed fan to allow operation at low, ambient conditions.

In colder climates, difficulty may be encountered with starting and keeping chillers on the line. If the water temperature entering the condensers cannot be maintained at a high enough level, the chillers will start, pump refrigerant into the condenser, starve the evaporator, and then trip off on the low refrigerant temperature safety.

In this situation a tower bypass is needed.

COOLING TOWER

- Common cooling tower
  - Flow over all tower cells when any chiller runs
- One dedicated condenser pump/ chiller
- Chiller controls start condenser pump
  - Chiller controls monitor flow switch

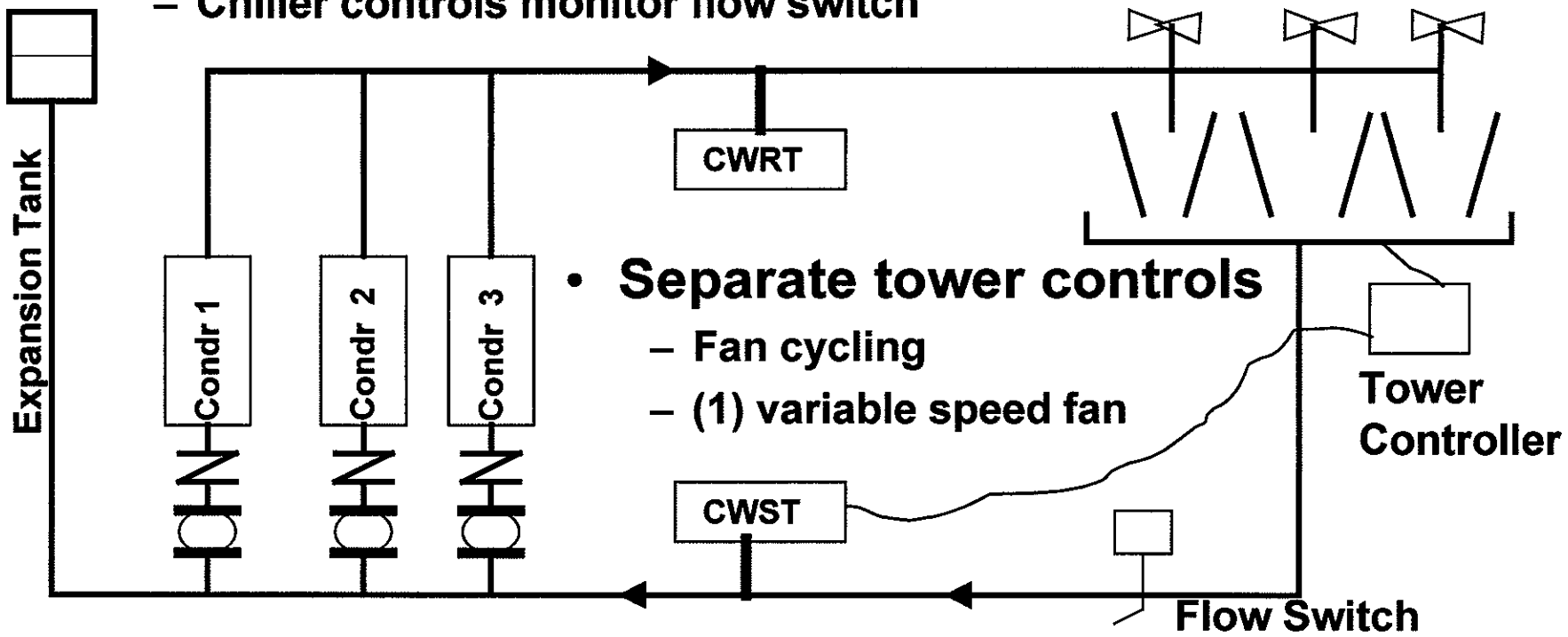

- Separate tower controls
  - Fan cycling
  - (1) variable speed fan

COOLING TOWER BYPASS

This arrangement operates just as previously described, with one exception:

If the temperature returning to the condensers is too low, the tower bypass valve is modulated to increase it to a pre-determined setpoint. As we learned earlier, the controls handling the valve should allow this temperature to drop to the level that the chillers can safely operate at. This is around 55F to 65F depending on the specific chiller design.

Dropping this temperature significantly reduces chiller lift and horsepower.

The control of the valve is sometimes provided by microprocessor based chiller controls, or it can be established by a separate controller.

COOLING TOWER BYPASS

- Allow CWST to drop to chiller limit (less energy)
- If CWST is too low, modulating bypass valve sends water around tower
  - Typically a special controller needed for bypass valve
  - Sometimes chiller controls modulate bypass valve

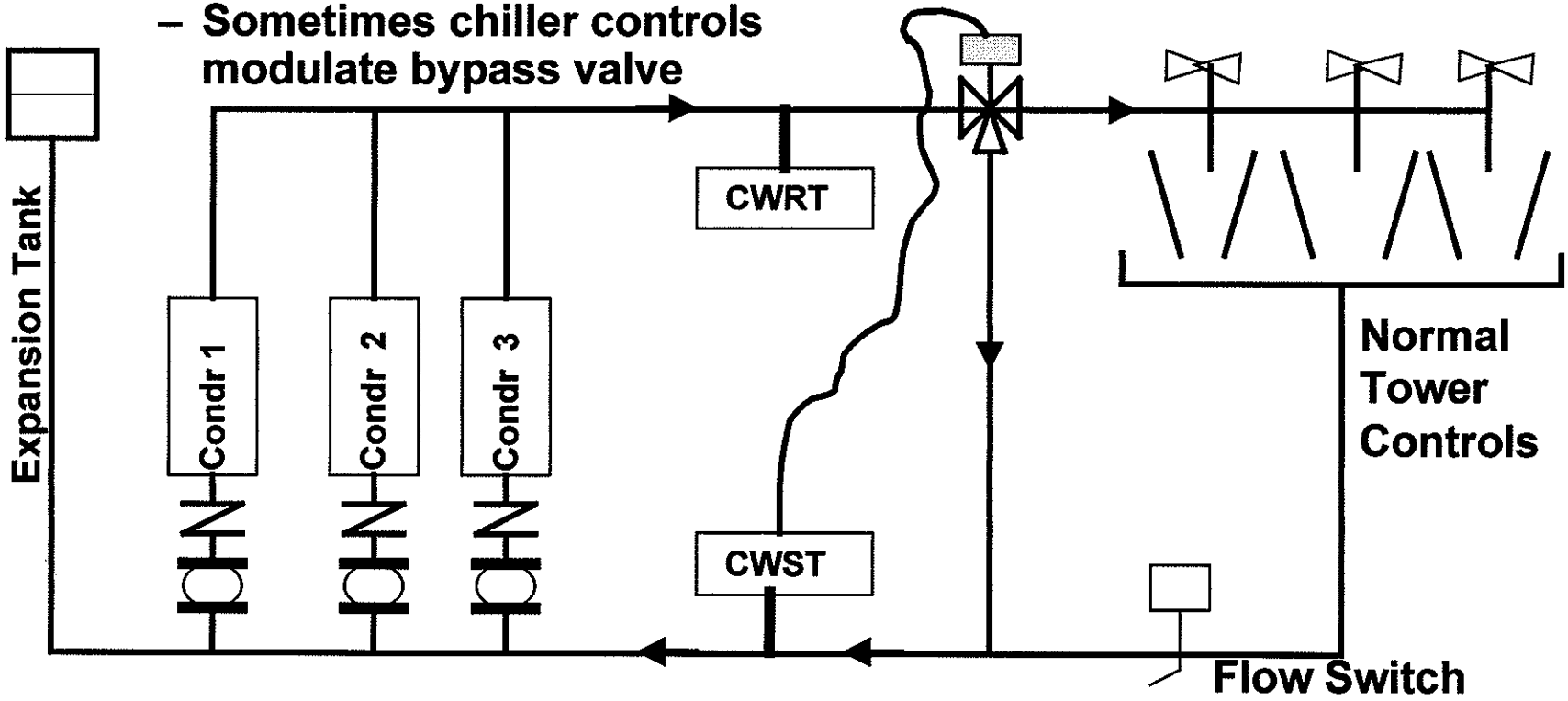

THREE CHILLER OPERATION

It is common practice in three chiller systems to provide two chillers each sized for 40% of the building load, and a third chiller sized for 20%. As we have previously seen, the bulk of the building operating hours occurs between 30% and 89% building load. Using the above arrangement of chiller capacities provides the optimum in plant operation.

When a need for cooling is established, the smallest (20%) chiller is started. If the building load exceeds 20%, one of the idle 40% chillers is started. As the 40% chiller ramps up taking on more load, the 20% chiller is ramped down and then stopped. If the building load exceeds 40%, the second 40% chiller is started and both machines share the load equally, until the building load exceeds 80%. At this point the smallest (20%) chiller is re-enabled to meet the building needs.

THREE CHILLER OPERATION

- 20% chiller started first
- If load > 40%, first 40% chiller started
- As 40% chiller takes on load, 20% chiller stopped
- If load > 40%, 2nd 40% chiller started (both share load)
- If load > 80%, 20% chiller re-started

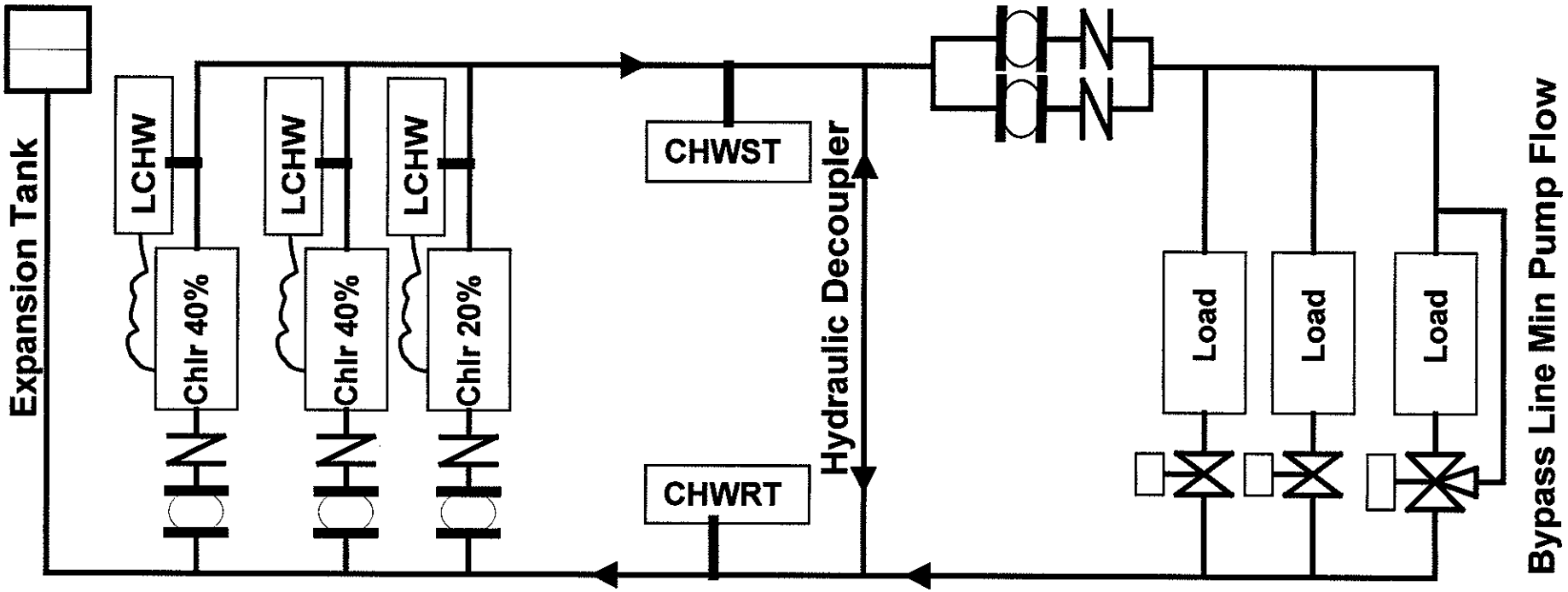

CHILLER PLANT CONTROL
(Carrier Comfort Network)

This section could not be complete without a mention of the control system behind any chiller plant. With the advent of Direct Digital Control technology, microprocessors are utilized throughout the control of HVAC systems - including the chiller plant.

First of all, each chiller can be purchased from the factory with the microprocessor control already installed. This is referred to by Carrier as a PIC control - Product Integrated Control. The factory installs (integrates) the controller.

The PIC is capable of stand alone control of the chiller. It monitors its own leaving chilled water temperature - (LCHW) in the diagrams - and controls its compression capacity to meet load. It also starts and stops the chiller chilled and condenser water pumps as needed.

Another microprocessor is mounted in the chiller plant in a NEMA1 enclosure mounted on the wall. This module is called a Chiller System Manager (CSM). It is connected to the individual chiller PICs with a network wire. Now, we have microprocessors talking to each other over the network. The CSM starts/stops the chillers as needed based on its internal timeclock and by monitoring the building load through the two sensors shown in the diagrams in this section - CHWST and CHWRT.

The CSM module also provides setpoints for each chiller depending on building load and adjust each chiller so that the building load is shared equally by all active chillers.

The CSM further can replace a failed chiller automatically if one should fail.

A third controller called a "Comfort Controller" (CC) is also mounted in the same NEMA1 enclosure within the chiller plant and connected to the same network wire. The CC can be programmed to control the tower start/stop, stage its fans , and modulate the tower bypass valve as needed. Receiving information from the chillers, it can drop the water off the tower to optimize chiller energy while maintaining the temperature high enough to prevent unstable chiller operation.

The final component in the chiller plant controls is a personal computer, wired to the same network wire. Through the PC, the plant operator can monitor plant temperatures, chiller internal data, change setpoints, change plant time schedules, receive alarms from the microprocessors, and generate regular reports on plant performance.

This total network of controllers is called the "Carrier Comfort Network".

CHILLER PLANT CONTROL

(Carrier Comfort Network)

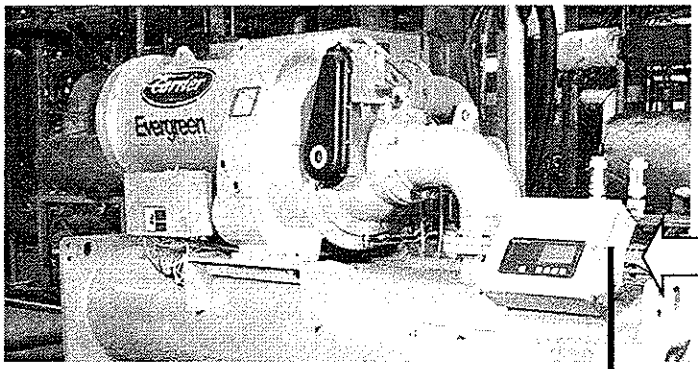

- **Product integrated control (PIC) controls each chiller**
  - **Control chiller & pumps**
- **Chiller system manager microprocessor**
  - **Controls chillers start/stop**
  - **Equal load sharing by active chillers**
  - **Controls plant leaving chilled water temperature**
  - **Provides auto. chiller backup**
- **Comfort controller microprocessor**
  - **Controls cooling tower**
  - **Controls tower bypass valve**
- **Central computer**
  - **Operator interface**

DESIGN PROJECT

- Assemble into your design teams
- Locate the "Chiller Plant Form" in the Design Project material in the back of this book
- Based on the material in this section decide on the chiller plant configuration to use for the Casino Hotel Building
  - Consider the valve packages you have chosen previously
- In the space provided on the Design Project "Chiller Plant Form" document your choice. Why did you select this particular plant configuration?

CHILLER PLANT FORM

CHILLER PLANT CONFIGURATIONS:	CHECK OFF THE ONES THAT APPLY TO YOUR CHILLER PLANT: IN THE SAPCE BELOW JUSTIFY YOUR CHOICES
1- Single Chiller	
2- Single Loop With Chillers in Series	
3- One of the Following Parallel Configurations	
a) Single Loop With Dedicated Chiller Pumps	
b) Single Loop With Parallel ("Ganged") Pumps	
c) Primary-Secondary Pumping Loops	
d) Differential Bypass Flow Control	
4- Air Cooled Condensers	
5- Water Cooled Condensers	
e) Cooling Tower Bypass	
6- Carrier Comfort Network Chiller Plant Control	

END

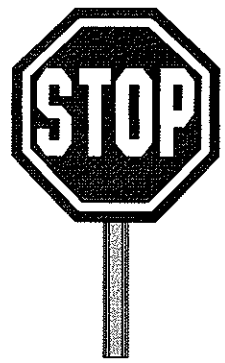

CHILLER SELECTION

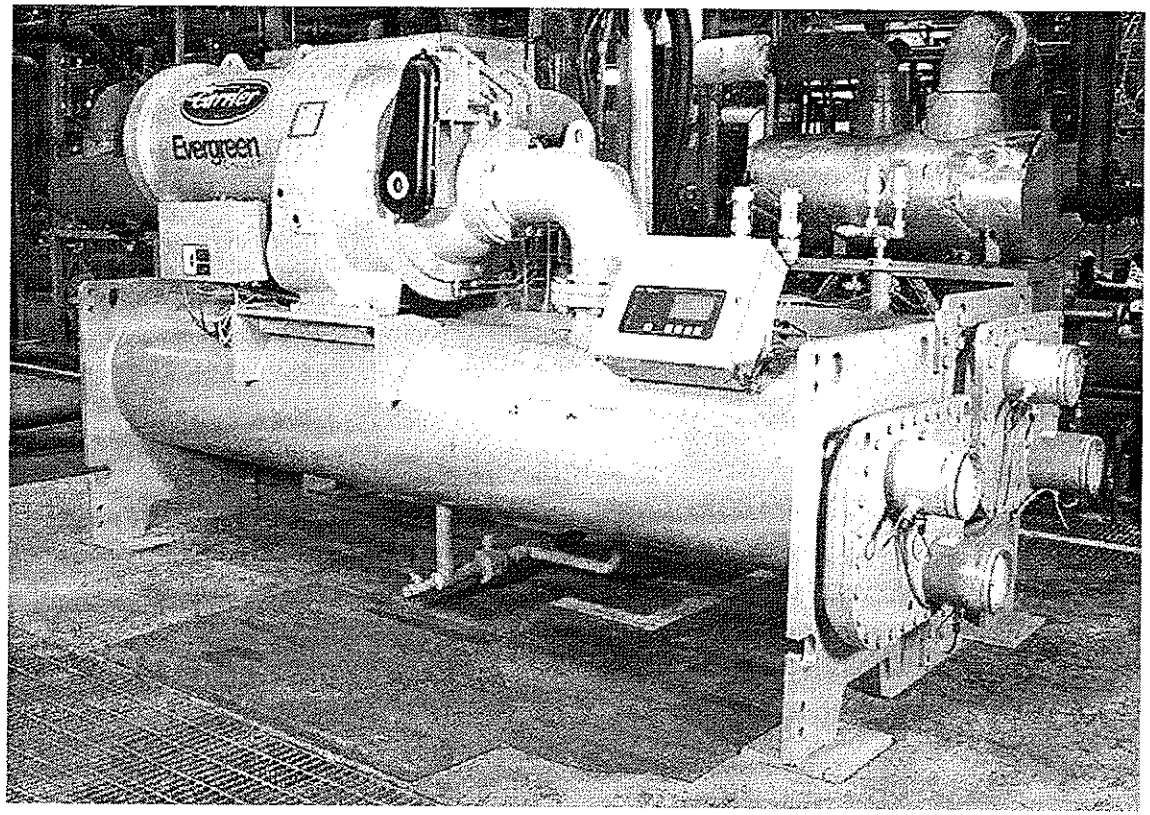

DES700

APPLIED WATER SYSTEM DESIGN

OBJECTIVES

Understanding how multiple chillers interact and work together in a Chilled Water System is critical for anyone involved in designing, specifying, or purchasing a chiller-based HVAC system. Knowledge of the appropriate number and tonnage of chillers, how condenser systems work, and how to integrate a chiller plant control system, are key factors in arriving at the best solution for a given application. Let us then begin our study by centering on the energy use of a chiller plant.

It is estimated that 86% of chillers are installed in some type of multiple chiller application. It is therefore important to understand how to select them and check their part load performance, particularly since many engineers will only assume the evaluation of a single machine, even though there are multiples in the system.

We are now ready to consider the chillers. In this section, we will cover chiller selection guidelines that take you from the building load to the final equipment selection and performance analysis.

When you finish this section you should be able to:

1- Determine Chiller plant GPM, tons, rise, and supply water temperature
2- Establish a water cooled condensers entering temperature and flow rate
3- Decide on a chiller plant layout
4- Establish individual chiller design selection parameters
5- Select Screw type chillers using Carrier's Computerized Selection Program
6- Check chiller part load performance and stability

OBJECTIVES

- Determine chiller plant design operating parameters
- Establish water cooled condenser design conditions
- Decide on chiller plant layout design
- Establish individual chiller design operating parameters
- Select chiller type for a project
- Size chiller(s) for a chiller plant
- Check chiller part load efficiency and stability

CHILLER SELECTION GUIDLINES

A- From the building terminal schedule, determine the total GPM needed by the system.

B- From the air handler schedule determine the GPM needed for any Air Handling Units on the job.

C- Calculate the chiller plant total required GPM by adding the terminal and air handler needs.

D- From the building loads, determine the building design block load.

E- Calculate the chiller plant design rise.
Rise = (24 x Block Load Tons) / Total GPM

F- Establish the chiller plant leaving chilled water temperature. Since the piping system is delivering water through an extensive building piping system, it may be desirable to provide the chiller plant with a slightly lower temperature than needed by the room terminals or air handlers. Selecting the chillers for a 1F lower chilled water temperature allows a 1F loss through the piping. The actual plant operating temperature can be adjusted upward later.

G- Establish entering condenser water temperature. This is a function of Cooling Tower performance.
1) Find 1% design wet bulb temperature from ASHRAE (say 78F as an example).
2) Establish tower approach - typically 7 to 8F
3) Entering condenser water temperature is the 1% design wet bulb plus the tower approach.
(78F + 7F = 85F).

H- Establish the condenser GPM (typical 3 GPM per evaporator tons)

I- Decide on chiller plant layout
1) How many chillers?
2) Series or parallel evaporators?
3) Counter-flow or parallel condensers?

J- Establish required individual chiller performance
1) Tons = Block tons/ no. of chillers or use the 20%, 40%, 40% approach for a Three Chiller Plant.
2) Establish the corresponding evaporator GPM
GPM = (24 x tons) / block load rise
3) Establish condenser water entering temperature
4) Establish condenser GPM (typically 3 GPM/evaporator ton)
5) Establish brine or water for the evaporator
6) Establish fouling factors for the evaporator and condenser (typically 0.00025 for evaporator and 0.005 for condenser).
1) Adjust these to fit water conditions at job

K- Decide on the type of Chiller (1 of 3 types)

L- Use manufacturer's computer program to size chillers.

M- Check part load performance using IPLV or NPLV methods, or your own method.

CHILLER SELECTION GUIDLINES

- Determine chiller plant GPM, tons, rise, and leaving chilled water temperature
  - Based on building loads, terminal selections, and air handler selections
- Establish condenser water entering temperature & GPM
  - Based on Cooling Tower parameters
- Decide on chiller plant layout
- Establish individual chiller required performance
- Select type of chiller
  - Reciprocating, Screw, or Centrifugal
- Size chillers using manufacturer's ratings
- Check chiller part load performance and stability

SAMPLE PROBLEM

The following page contains selection parameters for a sample problem that we will use to demonstrate the chiller selection procedure.

It is important to realize that the chiller or chillers to be selected are part of a Chilled Water Plant whose duty is to supply chilled water to terminal coils or air handler coils located throughout the building. For this problem we have provided the total terminal GPM and the total air handler GPM.

The chiller plant must deliver the peak block load tonnage - the largest load the building will expect to see at any one point in time during the year. For our problem, the block load tonnage will be 650 tons.

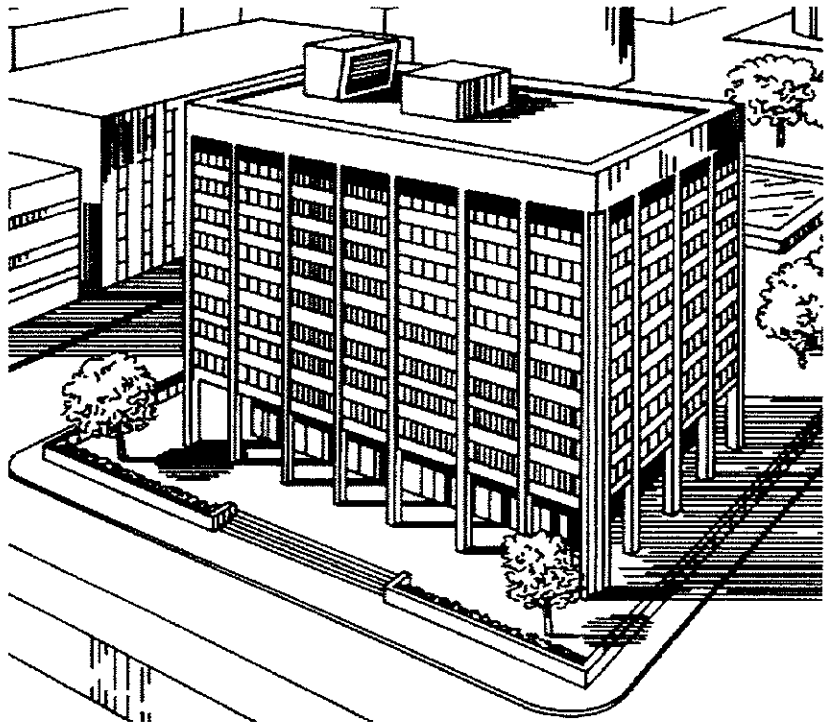

SAMPLE PROBLEM

- **Required Selection Parameters:**
  - Building terminal GPM needs — 844 GPM
  - Building air handler needs — 435 GPM
  - Building tonnage — 650 tons
  - Chiller plant layout : — Three Chillers (20%/40%/40%)
Parallel Evaporators
Parallel Condensers
Primary-secondary Pumping
Water Cooled Condensers with Tower
  - Design leaving chilled water temperature — 44 F
  - Design wet bulb temperature — 78 F
  - Design tower approach — 7 F
  - Design condenser water flow — 3 gpm/ton
  - Evaporator fouling factor — 0.00025
  - Evaporator fluid type — water
  - Condenser fouling factor — 0.0005

CHILLER PLANT NEEDS

1- Determine chiller plant GPM needs:

Terminal GPM	844 GPM
Air Handlers	435 GPM
Chiller Plant	1279 GPM

2- Determine building block load 650 Tons

3- Determine chiller plant design rise:

Rise = (24 x tons) / GPM

Rise = (24 x 650) / 1279 = 12.2 F

4- Determine chiller plant leaving chilled water temperature (CHWST):

a) Air handlers and terminal were selected using 45 F chilled water. Therefore, we will use 44 F plant chilled water to allow for piping losses in the building. A more thorough study could be conducted here, and is done in many cases.

5- Determine the Chiller plant return temperature:

CHWRT = CHWST + Rise

CHWRT = 44 + 12.2 = 56.2F

a) This could be rounded off to 12 F or left as is. At 12 F the chillers would assume a higher flow rate for the tonnage involved. Since load estimating is an art and not a science, we will round this off to 12 F

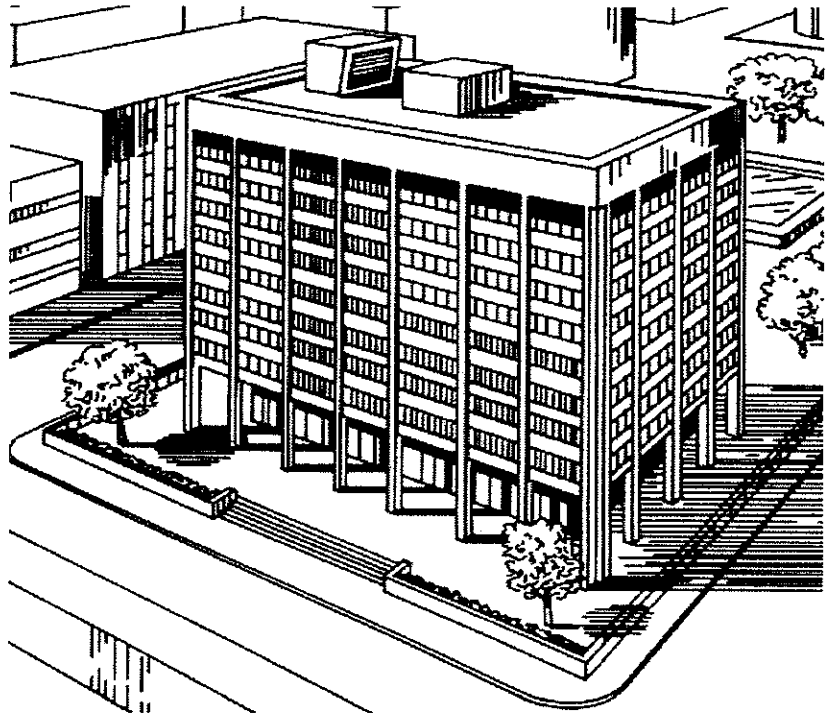

CHILLER PLANT NEEDS

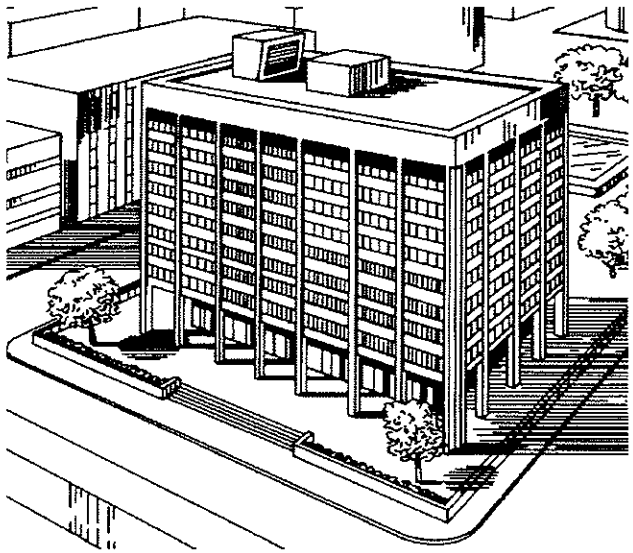

- **Chiller plant GPM**
  - Terminal + air handler GPM
  - Total GPM = (844 + 435) = 1279
- **Chiller plant tons (Given): 650**
- **Chiller plant rise**
  - Rise = (24 x Tons) / GPM
  - Rise = (24 x 650) / 1279 = 12.2 F
- **Plant supply chilled water temperature (CHWST)**
  - Selected terminal and air handlers based on 45 F
  - Assume 1 F piping line loss
  - CHWST = (45 - 1) = 44 F
- **Plant return chilled water temperature (CHWRT)**
  - CHWRT = (CHWST + rise) = (44 F + 12.2 F) = 56.2 ; round to 56 F

CONDENSER WATER NEEDS

1- Determine tower water returning to the condensers of the chillers (CWRT).
   A) Tower design (1% ASHRAE) wet bulb temperature (WB) = 78 F
   B) Assume tower approach of 7 F
   C) CWRT = (WB + Approach) = (78 + 7) = 85 F

2- Determine chiller plant condenser GPM needs:
   a) Assume the standard 3.0 GPM per evaporator tons. This will result in reasonable condenser pressure drops and a low Saturated Condensing Temperature for the chiller.

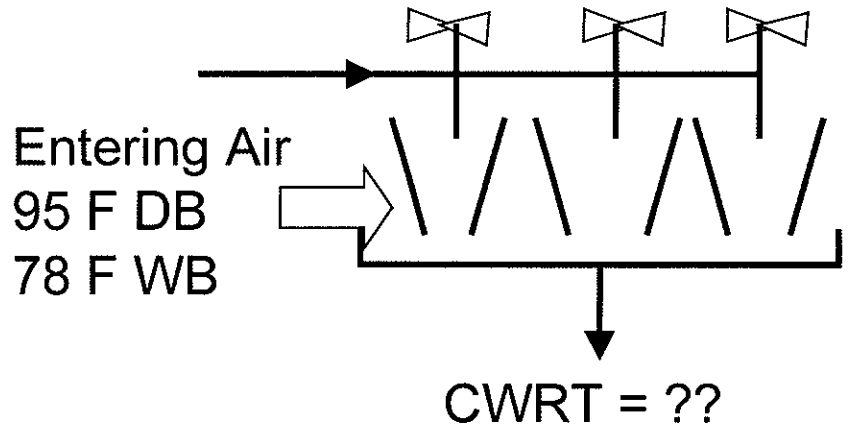

CONDENSER WATER NEEDS

- **Tower water return temp. (CWRT)**
  - **Design wet bulb (WB) temp = 78 F**
  - **Assume a 7 F tower approach**
  - **CWRT = (78 + 7) = 85 F**
- **Tower water GPM**
  - **Assume standard 3.0 GPM / ton**
    - **Reasonable condenser pressure drops**
    - **Low saturated condensing temp. in chiller**

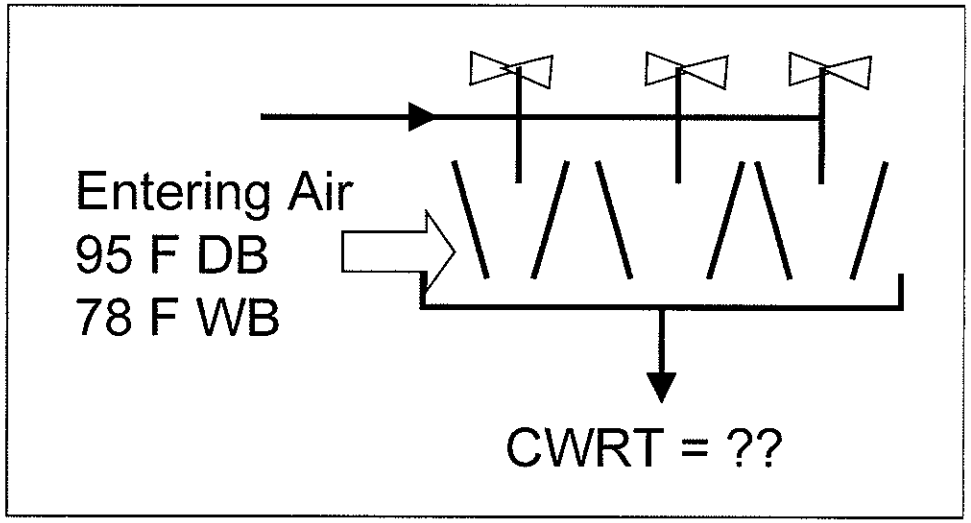

Cooling Tower

CHILLER PLANT LAYOUT

As shown on the following page, the sample problem has been chosen to have a Primary-secondary Pumping Loop type arrangement to take advantage of the two way valve controls chosen for the coils in the building. This system also allows the chillers to have their own chilled water pumps and maintain constant chilled water flow.

Three chillers were chosen to optimize the part load energy use of the chillers. Similarly, a cooling tower with water cooled condensers was chosen for energy reasons.

PRIMARY-SECONDARY PUMP LOOP SYSTEM

- Three parallel chillers (20%, 40%, 40% capacity)
  - Good plant efficiency
- Variable flow secondary to match coil control valve choices
- Cooling tower with water cooled condensers (energy)

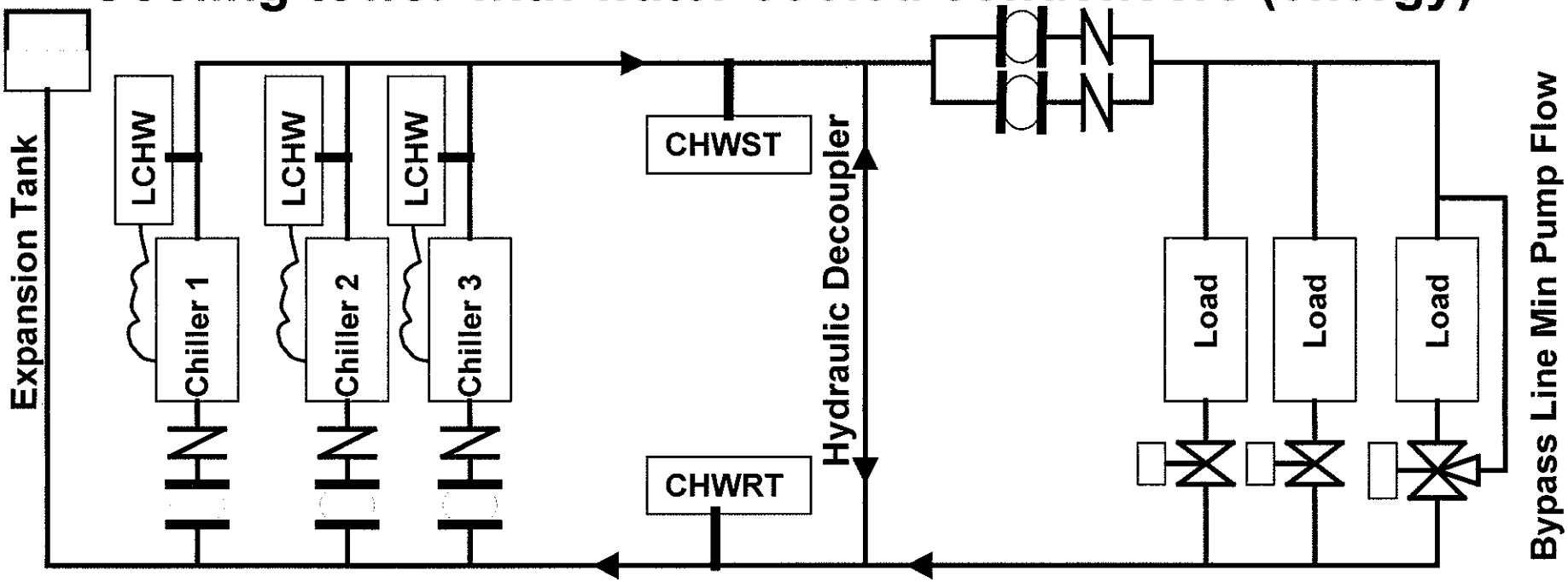

INDIVIDUAL CHILLER NEEDS

1- Determine each chiller's capacity:
   a) Plant was chosen at 20%, 40%, 40%
   b) Chiller 1 = 0.20 x 650 = 130 tons.
   C) Chillers 2 and 3 = 0.40 x 650 = 260 tons

2- From previous calculations:
   a) CHWST = 44 F
   b) CHWRT = 56
   c) CWRT = 85 F (from tower)
   d) Condenser GPM = 3.0 / ton

3- Choose Evaporator fluid type:
   a) Since all the chilled water lines will run inside the building, we will use fresh water. A brine, such as ethylene glycol would be needed if the piping were exposed to possible freeze conditions.

4- Choose fouling factors:
   a) Evaporator = 0.0025 This is standard for chiller ratings and based on a closed piping system which is filled with clean water.
   b) Condenser = 0.005 This is an open system and will foul over time. Therefore, use a higher fouling factor - typical for cooling towers. If we had brackish river water, .001 or .002 is not uncommon.

INDIVIDUAL CHILLER NEEDS

- **Multiple chillers chosen:**
  - 20%, 40%, 40%
  - Low plant energy use
- **Chiller capacity**
  - Chiller 1 = 0.2 x 650 = 130 tons
  - Chiller 2,3 = 0.4 x 650 = 260 tons
- **From previous calculations:**
  - CWST = 44 F
  - CWRT = 56 F
  - CWRT = 85 F (from tower)
  - Condenser GPM = 3.0 / ton
- **Evaporator fluid = water**
  - Closed Clean System

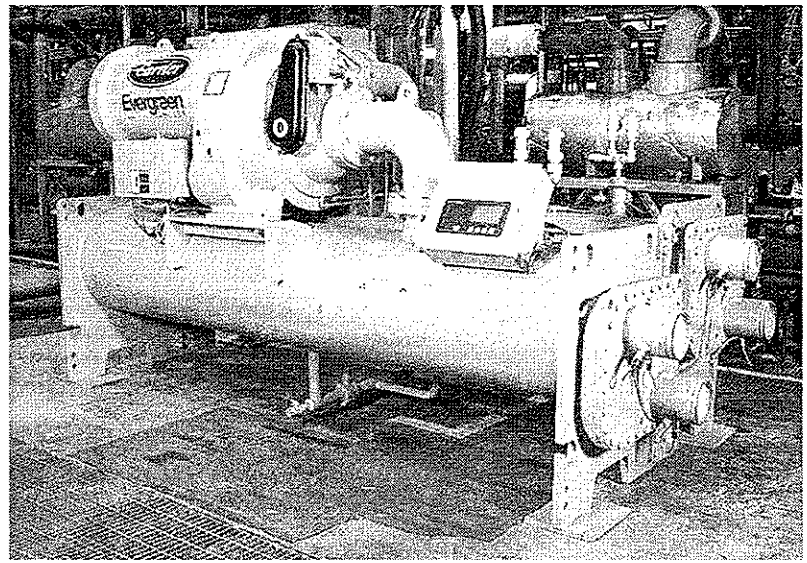

- **Evap. fouling = 0.00025**
  - Standard for closed system
- **Condr fouling = 0.0005**
  - Standard for cooling tower

CHOOSE CHILLER TYPE

There are three possible chiller types to choose from:
1- Reciprocating (up to 100 Tons/unit)
2- Screw Chillers (up to 850 Tons/Unit)
3- Centrifugals (up to 10,000 Tons.unit)

For the sample problem we see that the individual chillers are to be:

1- A single chiller at 130 tons
2- Two chillers at 260 tons.

Therefore, the choice of reciprocating chillers is not possible. The choice is narrowed to Screw versus Centrifugal.

Were it possible to select centrifugal chillers by hand, we could take a look at the differences. However, Carrier Centrifugal Chillers are selected by the factory, and this is not a practical approach for this class.

Therefore, we will use Screw Chillers in order to make use of the chiller selection program. In a real situation, you would have to evaluate full and part load energy use and stability based on the actual job conditions. In addition, service and maintenance considerations would have to be considered.

CHOOSE CHILLER TYPE

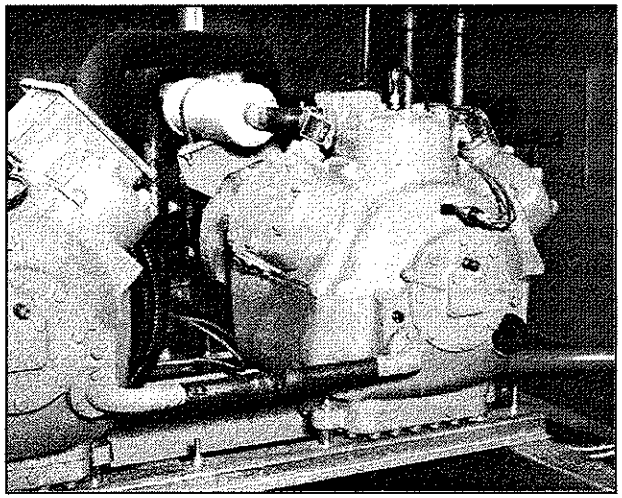

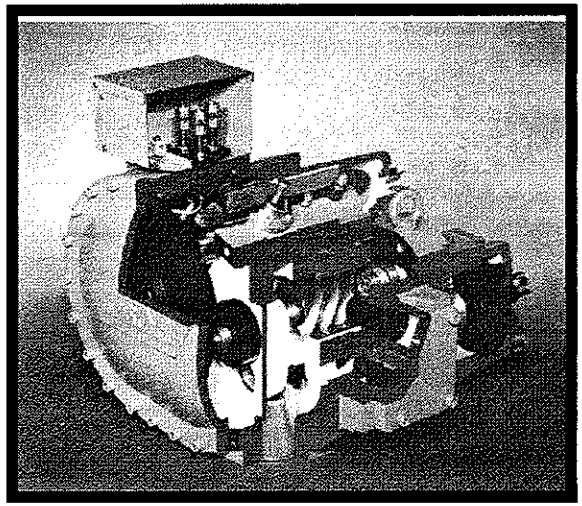

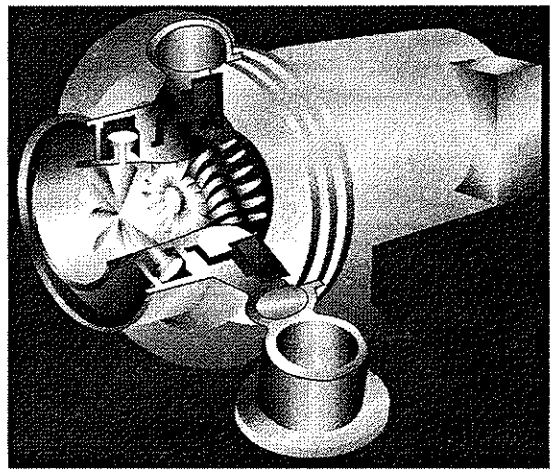

- **Tonnage Ranges:**
  - Reciprocating: Up to 100 tons
  - Screw: Up to 850 tons
  - Centrifugal: Up to 10,000 tons
- **Sample Problem:**
  - One at 130 tons
  - Two at 260 tons

- **Eliminate Reciprocating**
  - Not enough capacity
- **Screw or Centrifugal**
  - Compare full and part load energy and stability
  - Compare service and maintenance
- **Use Screw In Class**
  - Computerized Selections

CHILLER PART LOAD

In December of 1998, the American Refrigeration Institute (ARI) released a revised standard for water-cooled chillers – ARI 550/590-98. One of the major changes in the standard was made to the Integrated Part Load Value formula, or IPLV. The IPLV is a calculation of predicted chiller efficiency at the ARI Standard Rating Point. This efficiency number is an estimate of how efficiently a chiller will operate at part load conditions based on average criteria dictated by the standard.

The revisions to the IPLV equation were designed to make a more accurate representation of actual field operating conditions, such as geographic location and building type. However, because of the many assumptions, the formula cannot exactly match any one particular chiller installation. IPLV is not the most accurate way to simulate an actual chiller system. In fact, the ARI Standard 550/590-98 white paper, published in the ASHRAE Journal (the magazine of the American Society of Heating, Refrigeration and Air Conditioning Engineers) states:

"Because IPLV represents an average single chiller application, it may not be representative of a particular job installation. It is best to use a comprehensive analysis that reflects the actual weather data, building load characteristics, number of chillers, operational hours, economizer capabilities, and energy drawn from auxiliaries such a pumps and cooling towers, when calculating the overall chiller plant efficiency."

You will shortly see that you have the ability to check a Carrier Chiller against the ASHRAE IPLV or any part load criteria you desire. The Carrier 30 Series Computer Program allows this type of part load analysis, and your instructor will take you through the process shortly.

CHILLER PART LOAD

- ARI 550/590-98 Standard
  - Establishes rating criteria for chiller manufacturers
- Standard made major changes to the integrated part load value formulae (IPLV).
  - More closely approaches a typical field job
- For best accuracy, perform an individual study based on actual job conditions (NPLV)
- Carrier's Chiller Selection & Performance Program allows:
  - IPLV Calculations
  - Calculations based on your own criteria (NPLV)
- We will explore this shortly
  - Follow your instructor's directions

CHILLER PLANT ROOM SCHEDULE FORM

- Locate this form in the Design Project material
- Fill out the form as a team
- Submit the form as part of the Design Project

CHILLER PLANT ROOM SCHEDULE FORM	
CHILLER PLANT GPM NEEDS:	
ROOM FAN COIL TERMINAL GPM NEEDED	
VENTILATION AIR HANDLER GPM NEEDED	
CASINO AIR HANDLER GPM NEEDED	
TOTAL CHILLER PLAN ROOM GPM NEEDED	
CHILLER BLOCK LOAD FROM LOAD SUMMARY FIGURES SHOW YOUR CALCULATIONS HERE:	
BLOCK LOAD TONS	



SAMPLE COMPUTER INPUT DATA

30 SERIES CHILLERS INPUTS		
Job Name:	Sample Problem	
Prepared by:	TRAINCOM	
UnitTag Information		
UnitTag Name	Sample	
Location	City, USA	
Buyer P.O.		
Date	3/20/00	
Program Version	2.2	
Inputs:		
Cooling Capacity	260.0	Tons
Evap. Fouling Factor	0.00025	
Evap. Brine	Fresh Water	
Evap. Leaving Temp	44.0	F
Evap. Entering Temp	56.0	F
Condenser Type	Water Cooled package	
Compressor Type	Screw	
Refrigerant	R134a	
Hertz	60	
Unit Size	AutoSelect	
Volts	460	
Cond Entering Temp	85.0	F
Cond GPM	3	gpm/ton
Cond Brine	Fresh Water	
Cond Fouling factor	0.0005	
Suction Servise Valve	Yes	
Evaporator Passes	Standard	
Condenser Passes	Standard	

- **Use this form to assemble data that has been determined for the job:**
  - **Sample problem information is shown**
- **After running the program, the typical output data is shown on the following page:**

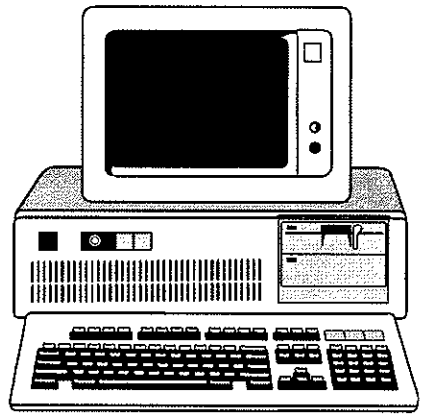

SAMPLE COMPUTER OUTPUT

TYPICAL CHILLER PROGRAM OUTPUT

		Primary	Alternate		Primary	Alternate
Location	Anywhere, USA					
Buyer P.O.	TRAINCOM					
Date	3/20/00					
Version	2.2					
Unit Size		30HX....		Factory Options		
Capacity, Tons		260.2		Flow Control Type	EXV	
Compressor Input Power, Kw		200.8				
Unit Input Power, Kw		200.8		Chiller Electrical Data		
Capacity control steps		8		Nameplate Voltage, volts	460	
Minimum capacity, %		36.8		Elec. Power Frequency, hertz	60	
Input Kw/Ton		0.769		Power to Control Circuit, volts	115	
Unit EER		15.6		Power to Control Circuit, phases	1	
Refrigerant		R134a		Minimun Circuit Amps	Need to Specify	
				MOCP, amps	FIOPs	
				Max. Instantaneous Current, amps		
Cooler Data				Condenser Data		
Fluid Type		Fresh water		Fluid Type	Fresh water	
Fluid Entering Temperature, F		56.0		Fluid Entering Temperature, F	85.0	
Fluid Leaving Temperatur, F		44.0		Fluid Leaving Temperatur, F	94.7	
Fluid Flow Rate, gpm		522.0		Fluid Flow Rate, gpm	783.7	
Fluid Pressure Drop, ft wg		11.1		Fluid Pressure Drop, ft wg	22.1	
Fluid Velocity, fps		4.9		Fluid Velocity, fps	6.6	
Fouling Fcator, (hr-sqft-D)/BTU		0.00025		Fouling Fcator, (hr-sqft-D)/BTU	0.0005	
Foul. Fact. Temp. Adj., F		1.01		Foul. Fact. Temp. Adj., F	2.32	
Saturated Suction Temp, F				Saturated Condensing Temp, F		
Circuit A		42.3		Circuit A	99.6	
Circuit B		42.5		Circuit B	99.3	
Outside Surface Area, sgft		465.9		Outside Surface Area, sgft	547.7	
Physical data				Factory Installed Options		
See printout				See printout		

Program Also Provides an Alternative at Lower Capacity

DEMONSTRATE SELECTION PROGRAM

- Follow your instructor
- Activate your computer
- Activate the 30 Series Selection Program in the Carrier Electronic Catalog
- Your instructor will guide you through the steps

- Then select the chillers for your project:
- Provide this output:
  - Chiller input printout
  - Chiller performance summary
  - Chiller NPLV part load performance

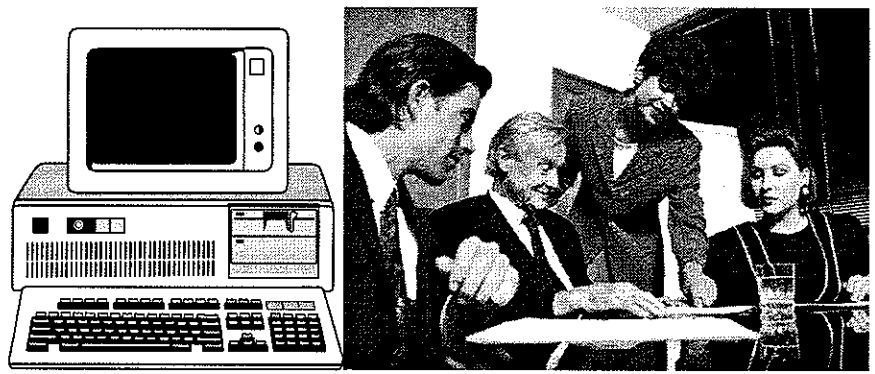

END

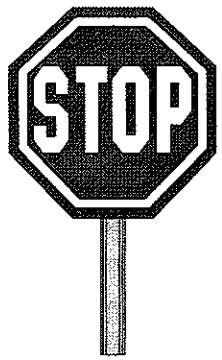

WATER PUMPS

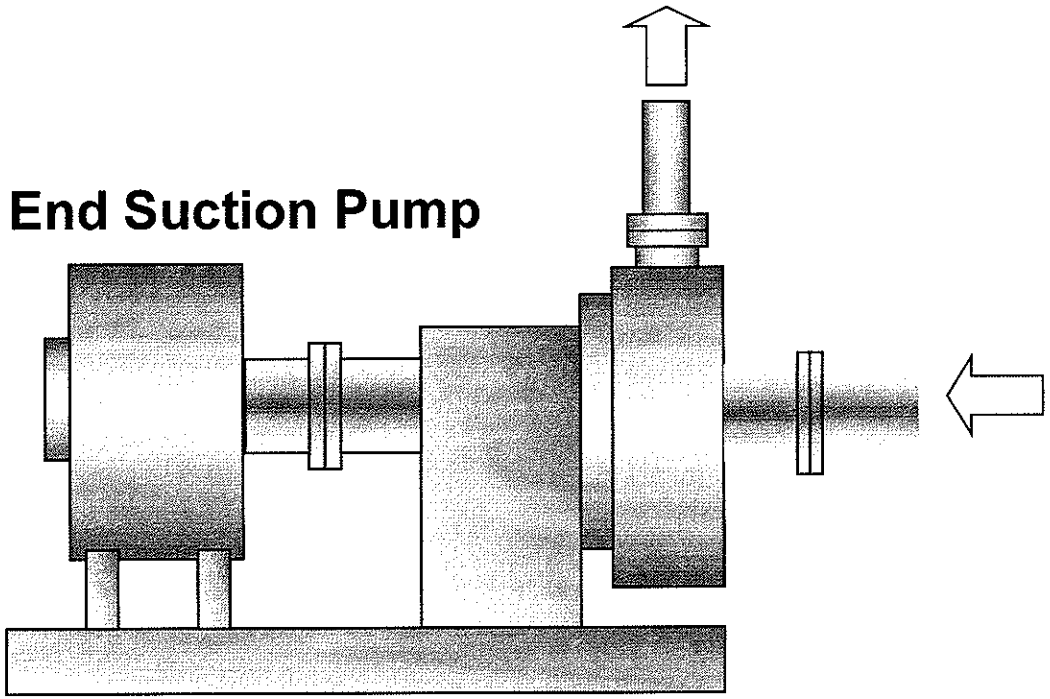

DES700

APPLIED WATER SYSTEM DESIGN

OBJECTIVES

So far, we have established the need for chilled water in the building by selecting a Chilled Water System with Room Terminal Water Coils and Air Handling Unit Coils. We have also located the coil equipment in the building. Next, we located and selected a Chilled Water Plant to supply the coils with chilled water.

To distribute the chilled water from the chiller plant to the coils we have laid out a Chilled Water Piping Distribution System, sized the piping, and estimated the highest frictional loss to be expected by the pumping system.

Finally, it is time to consider the pumping system. This section describe centrifugal water pumps, and how to apply and select them.

When you have finished this section you should be able to:

1- Describe the operation of a Centrifugal Pump
2- Properly apply a Centrifugal Pump
3- Select a Centrifugal Pump from manufacturer's pump data
4- Plot a Piping System Curve against a Pump Curve
5- Develop Pump Curves for Series and Parallel Pumps

OBJECTIVES

- Describe the operation of a centrifugal pump
- Properly apply a centrifugal pump
- Plot a piping system curve against a pump curve
- Select a centrifugal pump from manufacturer's pump data
- Develop pump curves for series and parallel pumps



DESIGN CHECK LIST STEPS

- Select control zones
- Calculate peak zone cooling and heating loads
- Select room fan coil terminals
- Select type of terminal controls
- Make piping layout
- Make condensate drain layout
- Select refrigeration machine
- *Select auxiliary equipment (pumps)*

PUMP TERMS

Capacity:
The pumping capability of the pump is usually expressed in gallons per minute (gpm).

Head:
Pressure at the base of a column of water is usually measured by the height of the water column in feet.

Net Positive Suction Head (NPSH):
The pressure at the pump suction flange is required to prevent pump cavitation.

Cavitation:
If the water pressure anywhere in the system falls below the vapor pressure of the water, dissolved air will flash out of the water forming bubbles. When moved to a higher pressure area, these bubbles will collapse. This bubble formation and collapse is called cavitation, and is likely to occur at the inlet to the pump impeller.

When it occurs, it causes noisy operation, rapid erosion of the pump impeller, and water hammer. It must be avoided.

PUMP TERMS

- **Capacity:**
  - **Volume flow measured in gallons per minute (GPM)**
- Head:
  - **Pressure at the base of a column of water is usually measured by the height of the water column in feet.**

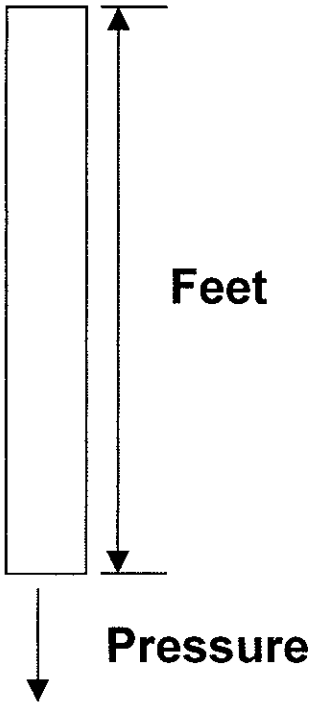

DETERMINING PUMP HEAD

The pumping head of a pump is broken down into the suction head and the discharge head. Columns of water are heavy and the pump may have to overcome some of this if the Piping System is an open system.

The next few pages show how the overall pump head is to be determined for various situations.

It can be said that the pump suction head is equal to the sum of any suction static head, pressure acting on the surface of a reservoir being emptied by the pump, the piping friction losses, and the velocity head. The same components make up the discharge head.

However, the suction components may actually show up as a credit. It depends if the suction piping and reservoir are above the centerline of the pump or below it.

Review the next few pages to see this impact.

DETERMINING PUMP HEAD

(With suction reservoir <u>below</u> pump centerline)

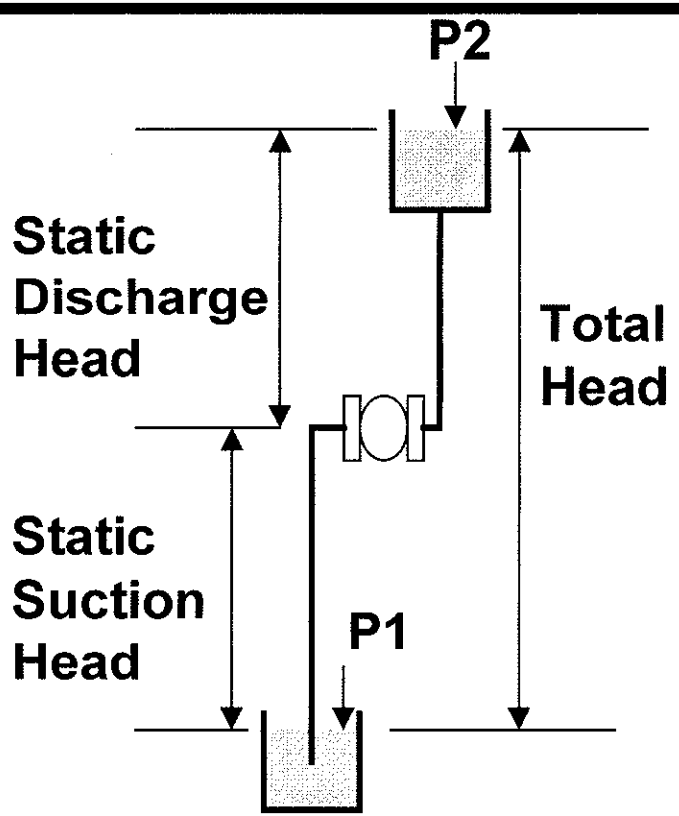

- **Suction head (total of):**
  - Static suction head
  - Suction line friction losses
  - Any positive pressure (P1) that exists on the reservoir
- **Discharge head (total of):**
  - Static discharge head
  - Discharge friction losses
  - Any positive pressure (P2) that exists on the reservoir

- **Total pump head = suction head plus discharge head**

DETERMINING PUMP HEAD

(With suction reservoir above pump centerline)

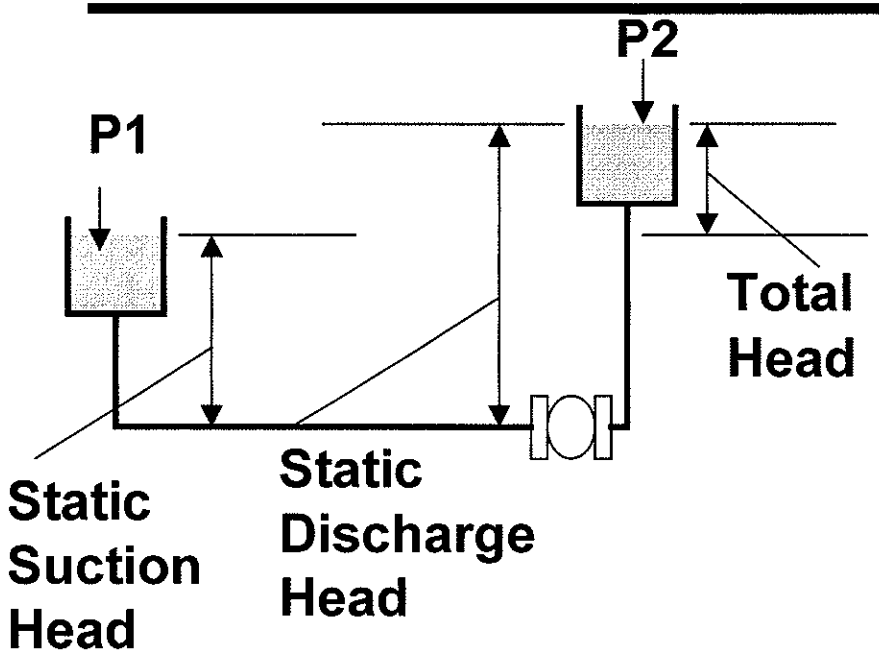

- **Suction head (total of):**
  - Static suction head
  - Suction line friction losses
  - Any positive pressure (P1) that exists on the reservoir
- **Discharge head (total of):**
  - Static discharge head
  - Discharge friction losses
  - Any positive pressure (P2) that exists on the reservoir

- **Total pump head = suction head plus discharge head**

DETERMINING DISCHARGE HEAD

(Possible discharges into a reservoir)

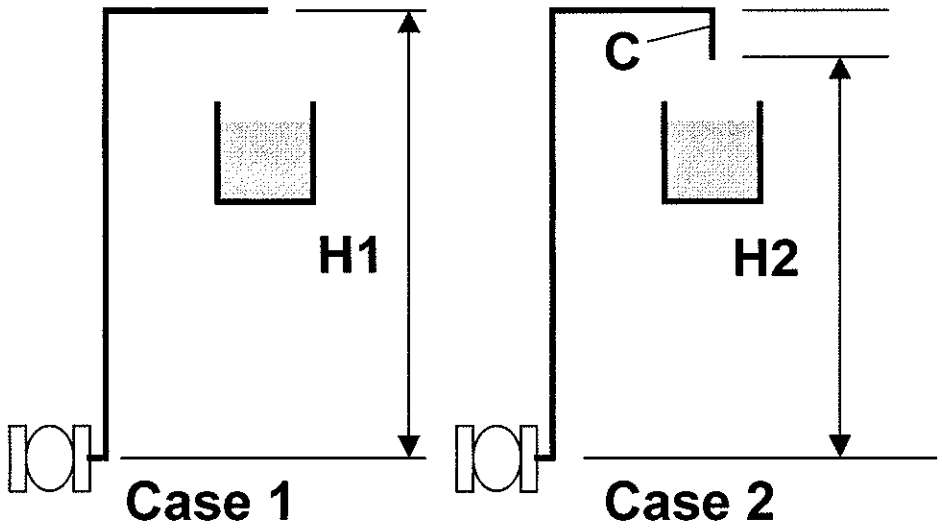

- Static discharge head =
- Case 1:
  - No drop leg into reservoir
  - Static discharge head = H1
- Case 2:
  - Drop leg into reservoir (C)
  - Static discharge head = H2
- In case 2, drop leg provides a credit (C).

- Drop legs provide columns of water whose weight is a credit to pump discharge head

VACUUM BREAKER
(at Discharge into a Reservoir)

The page below illustrates a piping situation that needs special attention. This can happen on condenser piping circuits. If the height of column (H) is greater than 35 ft at shutdown, the atmospheric pressure (P) acting on the surface of the reservoir will not be able to support the column of water (H). Some of the water in (H) will drain into the reservoir, creating a vacuum pocket at the top of column (H).

When the pump starts again, the pressure rapidly rises in the piping, the vacuum rapidly collapses, and violent water hammer occurs. Water hammer can exert great forces on the system and can break mechanical parts of the condenser and or piping.

To prevent this, provide a vertical discharge loop with a vacuum breaker at the top of the loop. When the pump stops, the pipe leg (H) will drain into the reservoir. It simply is filled by the pump when the pump starts.

With a vacuum breaker, the pump discharge head is H2 when running, and H at pump start.

VACUUM BREAKER

(at Discharge into a Reservoir)

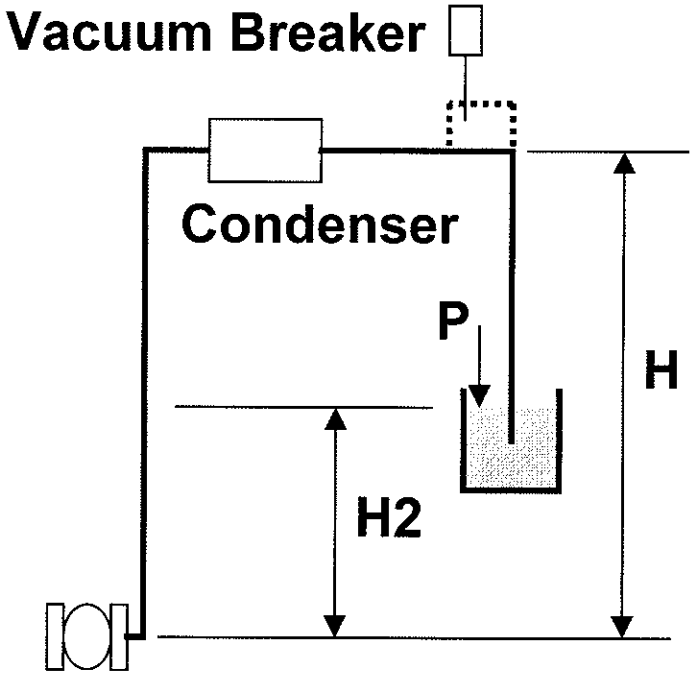

- **If length of (H) is greater than 35 ft at shutdown:**
  - Atmospheric pressure (P) can not support weight of column of water (H - H2)
  - Vacuum pocket will form At top of column (H)
  - When pump starts: vacuum pocket rapidly collapses
  - Violent water hammer occurs
  - Mechanical breakdown of piping
- **Avoid with a discharge loop and a vacuum breaker**
- **Line (H) drains when pump shuts down**
- **Pump discharge head with vacuum breaker**
  - Running = H2; starting = H

NET POSITIVE SUCTION HEAD (NPSH)

NPSH is the pressure required at the suction flange of the pump to prevent cavitation of the pump.

Cavitation of the pump occurs when water flashes into vapor bubbles and then rapidly collapse back into a liquid state. The vapor bubbles occur if the pressure at the suction flange is not above the vapor pressure of the entering water. If it is not, vapor bubbles occur at the entrance to pump's impeller. The water pressure bubbles rapidly collapse within the impeller itself causing noise and rapid erosion of the impeller metal.

This must be avoided.

NET POSITIVE SUCTION HEAD (NPSH)

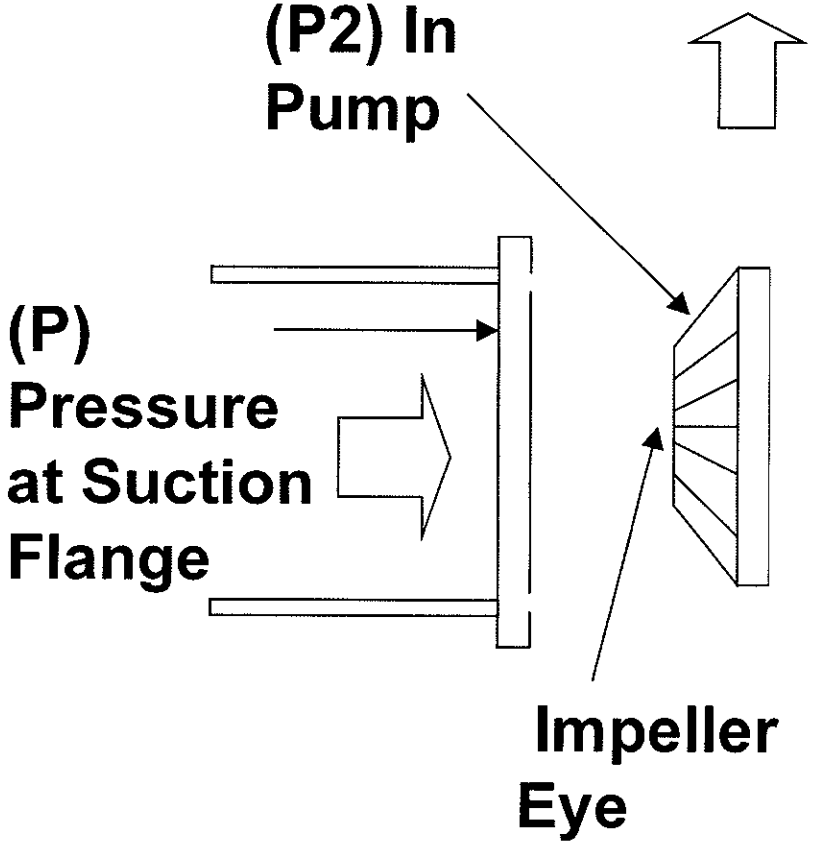

- Pressure (P) at pump suction flange required to prevent cavitation
- Cavitation:
  - Formation of vapor bubbles and their rapid collapse
  - If (P) drops below vapor pressure of water, water will flash into vapor bubbles before reaching impeller inlet
  - Pump raises pressure (P2) above vapor pressure
  - Bubbles rapidly collapse
  - Noise
  - Rapid wear of impeller

HORIZONTAL SPLIT CASING PUMP

The figure below shows a split casing or double suction pump. These pumps usually run at either 1150 or 1750 RPM.

The bearings are located at the end of the shaft and are easily serviced. The pump can be completely dismantled without disturbing the piping. Since water enters the pump from both ends, no end thrust is required.

The disadvantage is that the casting for the casing is somewhat complicated, and two stuffing boxes are required. Also, since the shaft takes up room at the eye of the impeller and is long between bearing supports, the shaft diameter has to be increased to keep the first critical speed above the operational speed. These two factors tend to increase entrance losses.

However, good efficiencies are available and many engineers favor this type of pump.

HORIZONTAL SPLIT CASING PUMP

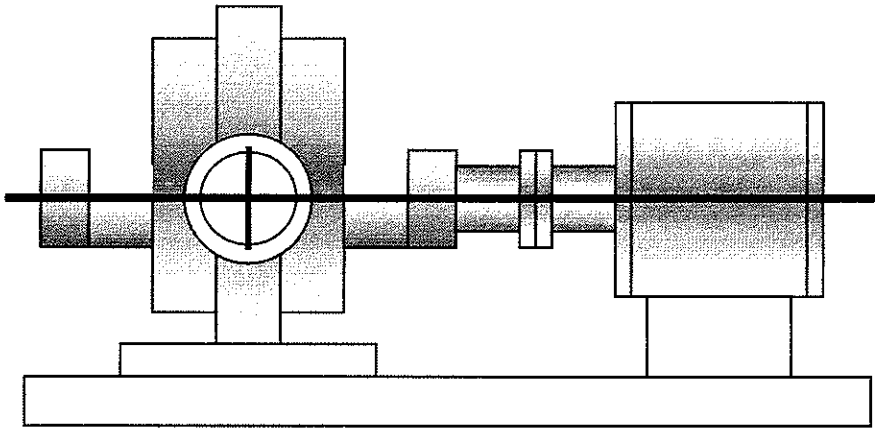

- Run at 1150 or 1750 RPM
- Two suctions
- Bearings at shaft ends
  - Easily serviced
  - No thrust bearing needed
- Entire pump can be dismantled without disturbing piping
- Good efficiencies
- Long shaft
  - Large diameter
- Tends to be expensive

END SUCTION PUMP

The figure below shows an end suction or vertical split casing pump. The pump is also referred to as a "unipump". The motor and pump are one integral unit. This makes a very compact and less costly pump - even in larger capacities. The motor and shaft are of special design.

An alternate is to make the motor and pump in such a way that they have separate casings and are coupled by a shaft and mounted on a single base. This allows the use of standard motors.

In either case, the piping must be disconnected to open up an end suction pump for servicing. Although only one stuffing box is needed, it is difficult to get at.

There is no impedance to the flow entering the eye of the impeller and entrance losses are low.

These pumps are often coupled to a 4 pole or 2 pole 60 cycle motor and run at speeds of 1750 or 3500 RPM.

END SUCTION PUMP

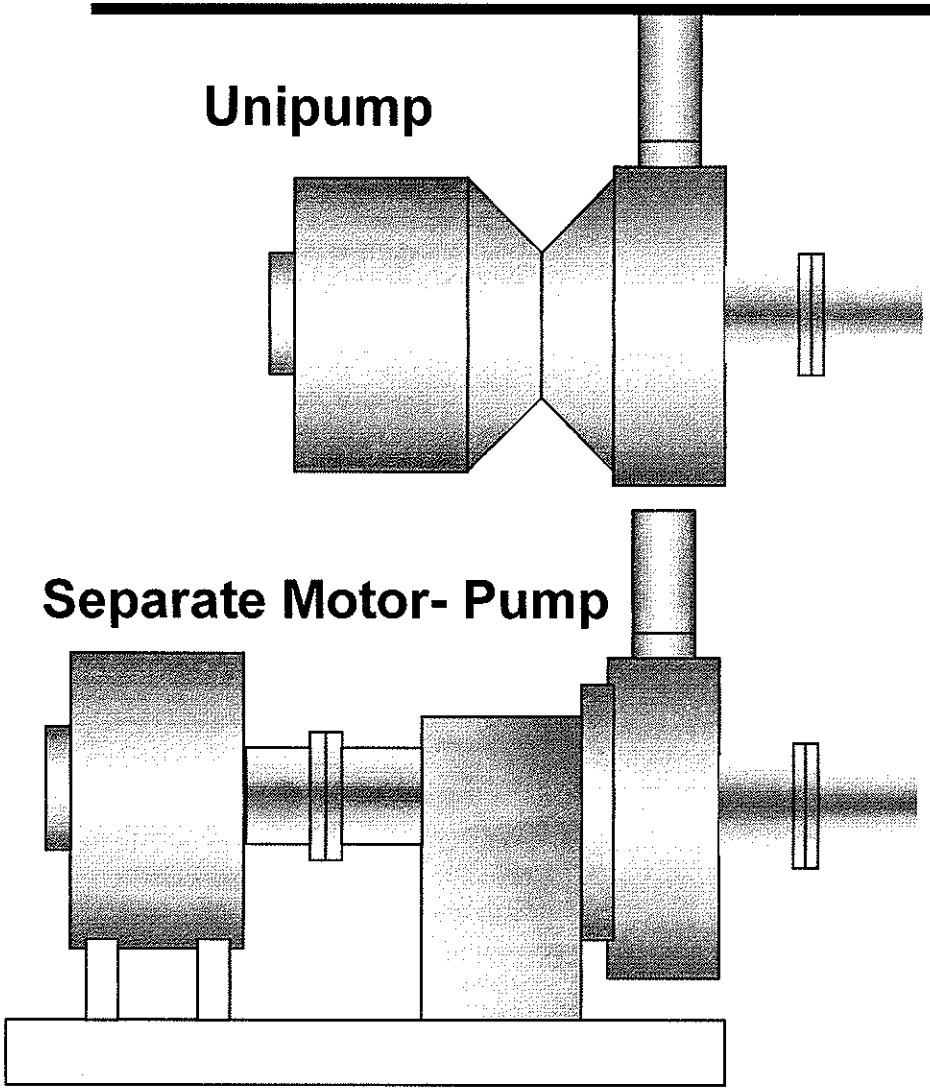

- End suction
  - One packing gland
    - Hard to service
    - Low entrance losses
  - "Unipump design"
    - Special motor & pump
  - Separate pump & motor
    - On single base
    - Standard motors
- Lower cost pump
- Run At 1750 or 3500 RPM
- Popular in market

PUMP PACKING

The figure below shows both ring packing and a mechanical seal to control water leakage along the pump shaft. The packing rings require a constant small leakage of water along the shaft for bearing cooling and lubrication. If the gland is tightened too much the shaft will become scored and the leakage will get out of control. Repairs will then be expensive and troublesome.

If a pump with ring packing has its suction below atmospheric, it becomes necessary to induce water under pressure into a "lantern ring" near the center of the packing. Under this condition, water leakage flows both into the pump suction and out along the pump shaft. If the water being pumped is clean and free of grit, it can be piped from the pump discharge to the lantern ring. Otherwise, the packing water must come from an external regulated pressurized source.

Mechanical seals will stop all leakage, except for a negligible amount in the form of vapor, so a pump drain is not necessary. However, flow through the pump must be maintained to supply the bearings. Otherwise the pump will overheat and become damaged.

Mechanical seals are very popular in commercial work

PUMP PACKING

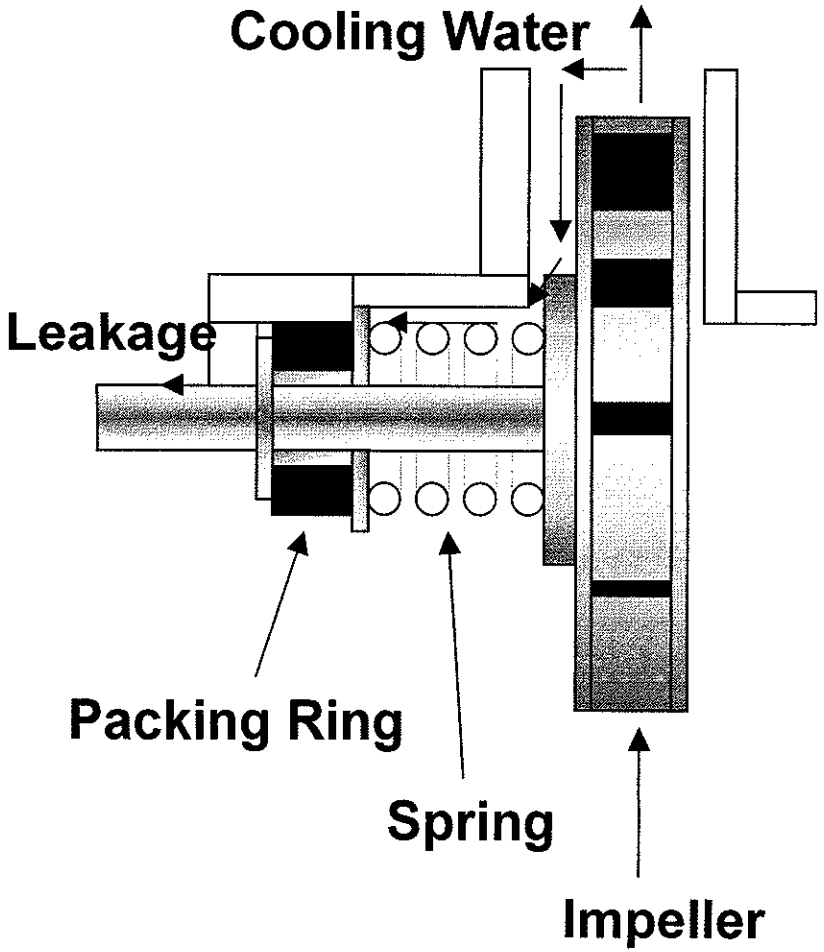

- **Packing ring and mechanical seal**
  - Small leakage of pump water
  - Cools and lubricated bearings
  - Water from pump itself
- **Pump must be pumping water**
  - Overheat bearings otherwise
- **Minimal leakage**
  - Vaporizes
  - No pump drain needed

PUMP MATERIALS

The usual specifications for air conditioning call for a cast iron pump casing with bronze impellers and bronze trim. The shaft may be of stainless steel or mild steel with bronze or ceramic shaft sleeves covering all parts that come in contact with the water. Bearings are almost universally ball bearings.

To cope with special conditions, pumps can be provided with a variety of special materials.

PUMP MATERIALS

- Air conditioning duty
  - Cast iron pump casing
  - Bronze impeller
  - Stainless steel shaft
  - Alternate mild steel shaft
    - Bronze or ceramic sleeves cover water contact area of shaft
  - Bearings are ball bearings
- Special applications
  - Materials selected as needed

PUMP CURVE

The typical characteristic of pump performance is described by the diagram below. A head - capacity curve is developed by a manufacturer from standard tests for a fixed RPM, impeller size, and casing size.

For a centrifugal pump, the head it can develop decreases as the flow rate increases.

TYPICAL PUMP CURVE

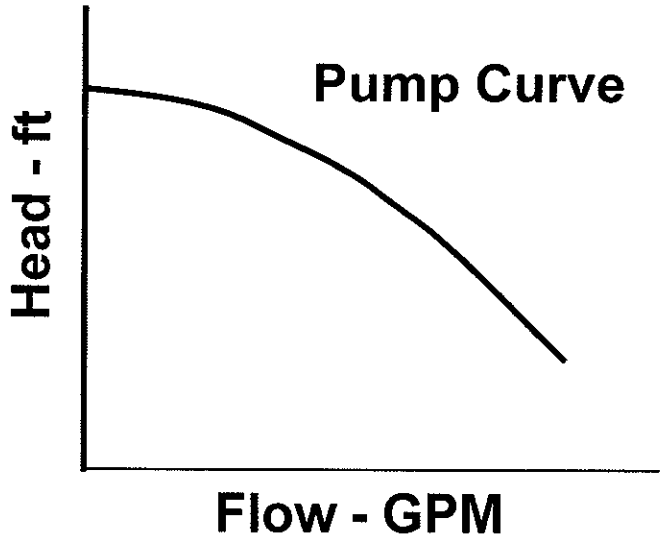

- Typical pumps performance
- Head-capacity curve
  - "Pump curve"
- Determined from standard tests by manufacturer

FLAT VERSUS STEEP PUMP CURVE

Pump performance can be further characterized by the slope of the pump curve. Pumps are said to be either flat or steep. Flat pumps are typically used on Closed Systems where variable flow conditions are expected to exist. Steep pump curves are typically used in Open Piping Circuits such as Cooling Towers where high head and constant flow can be expected.

FLAT VERSUS STEEP PUMP CURVE

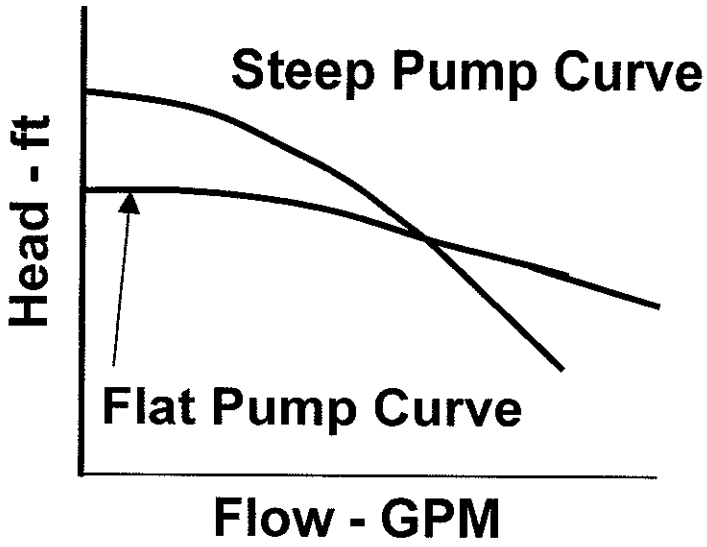

- Characterized by the slope of the pump curve
  - Flat or steep
- Flat curved pump
  - Head varies slightly as flow changes
  - Used on Closed Systems where variable flow is expected (chilled water circuit)
- Steep curves pump
  - Head varies significantly as flow changes
  - Used in open circuits (tower) where high head and constant flow desired

SYSTEM CURVE
(Closed System)

For a given Piping System the frictional loss will vary as the flow through the piping changes. This resistance characteristic when plotted on a head versus flow graph is called the "system curve". It can be constructed based on the following equation:

$$Flow2 = [\ Flow1 \times (Head2 / Head1)^2\ ]$$

Thus, once the design flow and frictional losses for a piping system have been determined, the system curve for the Piping System can be plotted on a pump curve as shown below.

Where the system curve crosses the pump defines the "operating point" for the Piping System.

SYSTEM CURVE

(Closed System)

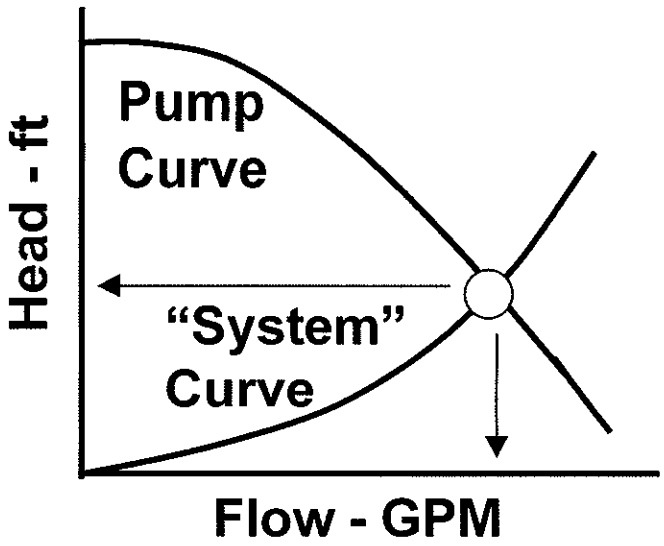

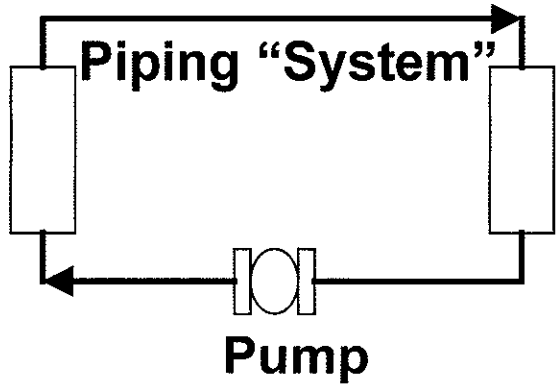

- System curve represents frictional resistance of the piping system as the flow rate varies
  - Flow2 = [flow1 x (head2/head1)^2]
- Where system curve crosses pump curve defines the operating point for the system.

SYSTEM CURVE
(Open System)

For a given piping system, the frictional loss will vary as the flow through the piping changes. This resistance characteristic when plotted on a head versus flow graph is called the "system curve". It can be constructed based on the following equation:

$$Flow2 = [\ Flow1 \times (Head2 / Head1)^2\ ]$$

Thus, once the design flow and frictional losses for a piping system have been determined, the system curve for the Piping System can be plotted on a pump curve as shown below.

The difference that comes in to play when the system is "open" is that the head on the pump is not zero at zero flow - it is the unbalanced head due to the Open System.

The system curve starts at this unbalanced head at zero flow and progresses from there. In other words, the unbalanced head is added to each point calculated for the system head.

Where the system curve crosses the pump defines the "operating point" for the Piping System.

SYSTEM CURVE

(Open System)

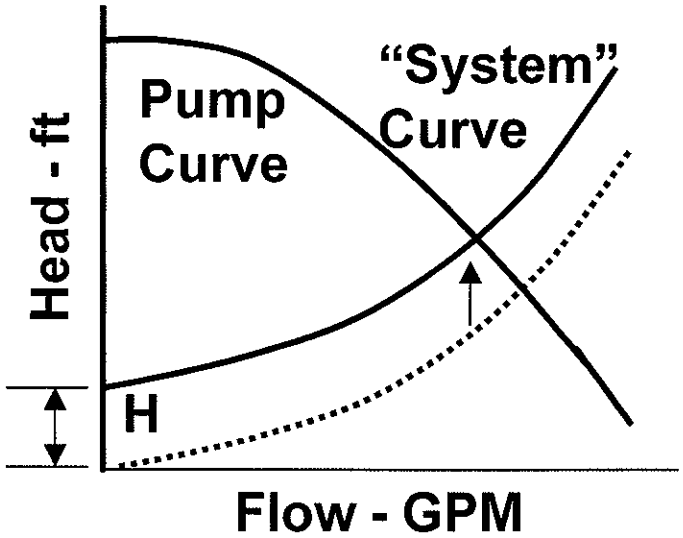

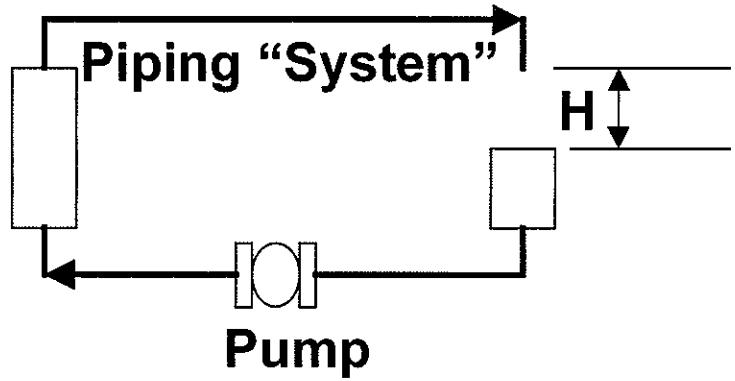

- System curve represents frictional resistance of the piping system as the flow rate varies
  - Flow2 = [flow1 x (head2/head1)^2]
- Unbalanced head (H) of open system is additive
- System curve crosses pump curve at higher operating point for the open system.

PUMP HORSEPOWER

Liquid Horsepower:
The energy needed to produce the total pump head (Hd)
Liq HP = (GPM x 8.33 (lb/gal) x Hd (ft)) / 33,000
= (GPM x Hd) / 3960

Brake Horsepower:
The power a motor must supply to drive the pump.
BHP = (Liq HP) / (Pump Overall Efficiency)

The pump efficiency is determined from actual manufacturer tests.

.

PUMP HORSEPOWER

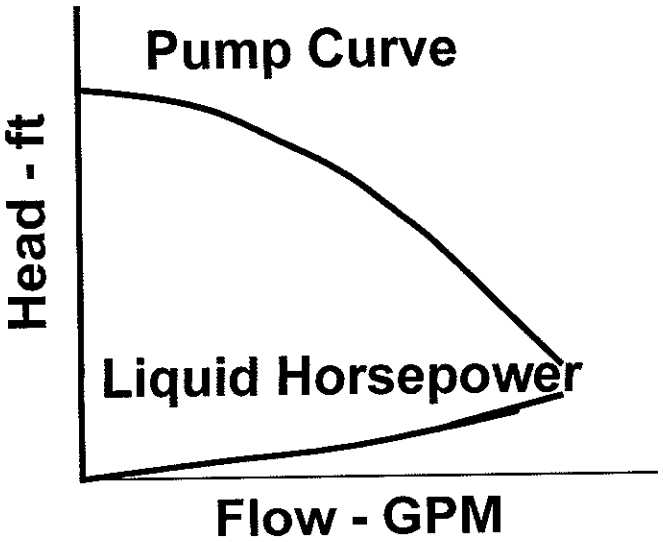

- **Liquid horsepower:**
  - Energy needed by pump to overcome all losses from discharge flange to suction flange
  - Static head losses + friction losses + velocity head (usually neglected)
    = (Gpm x 8.33 lb/gal x total head)/33,000
    = (Gpm x total pump head) / 3960
- **Brake horsepower:** (greater than liquid horsepower)
  - Motor power to deliver liquid horsepower
    = Liquid horsepower / pump efficiency
  - Efficiency determined from tests

PUMP RATINGS

Manufacturers usually produce several families of pumps. All members within a given family have similar hydraulic performance characteristics.

Casings are made in several sizes and often classified by the size of their discharge connection. The suction connection is usually one pipe size larger than the discharge. To vary head and capacity, impellers of various diameters are installed in a given casing size.

Pump performance is typically shown in the form of a pump curve which show capacity in GPM versus head in feet for a variety of impeller diameters. The curve is for a given RPM consistent with the motor drive chosen. Brake horsepower and efficiency lines are also shown.

Thus for a given GPM operating at a desired head, one can select a pump size, impeller diameter, and determine the required brake horsepower.

PUMP RATINGS

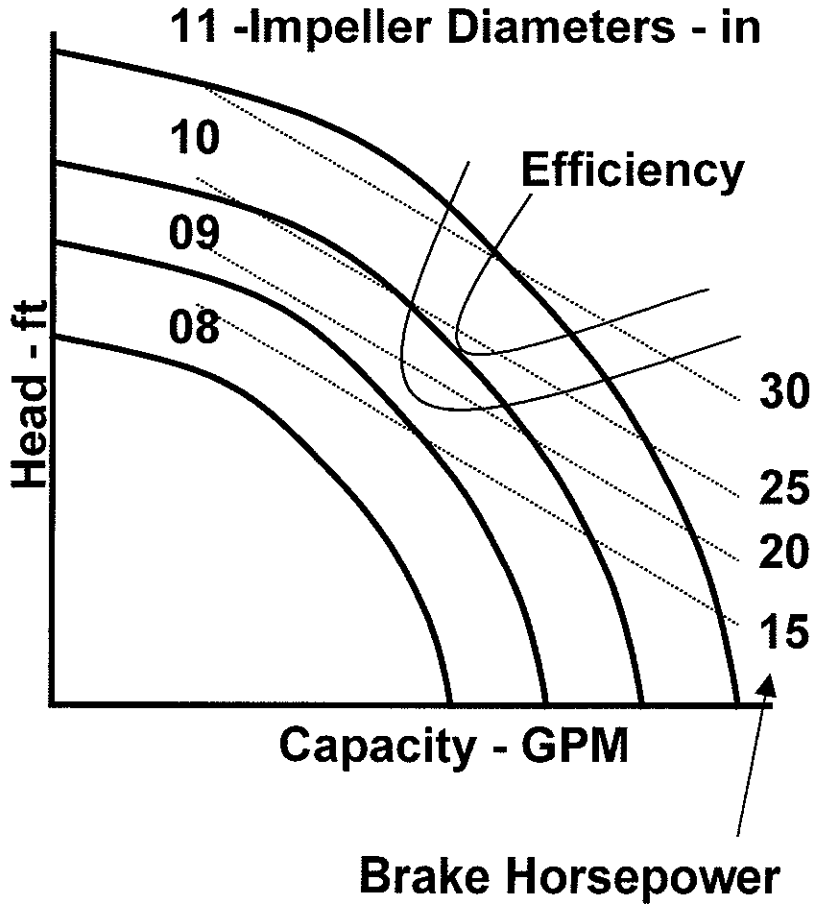

- **Manufactured in families**
  - Have similar performance characteristics
- **For family:**
  - Casing sizes vary
  - Impeller changes in each casing
  - Run at fixed RPM
- **Typical curve**
  - Head versus RPM
  - Various diameters
  - Brake horsepower and efficiency lines shown

PUMP SELECTION RANGE

From the pump plot, the maximum efficiency island becomes the target for pump selection (MET). The MET island is located in the middle of the pump's operating head range. The MET is therefore considered to be the 100% design capacity selection point.

From the MET, pump manufacturers recommend that a pump be selected at no lower than 67% of the MET and no more than 115% of the MET. A range is necessary because pump casing and impeller sizes are not infinite in their variety and the designer may have to select one that does not exactly match the jobs desired flow and head needs.

If one has to favor which side of the MET to select a pump on, it should be to the left of the MET. Head estimates for Piping Systems are based on pipe roughness factors that have to accumulate over years and also the designer tends to be on the conservative side.

When installed, the pump will meet less resistance than designed for and tend to "move out" on its curve and pump more than design GPM. Thus, selecting to the left of the MET provides some cushion for this phenomenon.

PUMP SELECTION RANGE

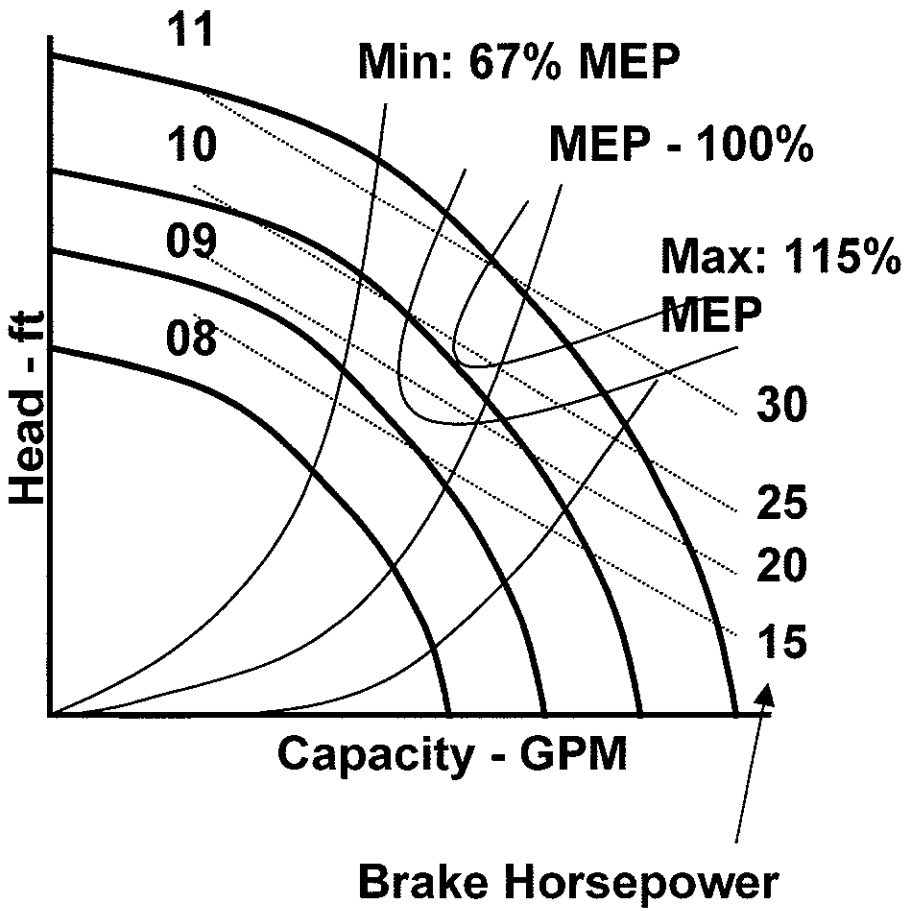

- Max. Efficiency Point of pump is found (MEP)
  - Mid point of pump head
- Select for design flow at MEP = 100%
- Min flow: 67% MEP
  - Tend toward this
  - Head usually overestimated
  - At start-up pump will "over-pump" against lower actual head
- Max flow: 115% MEP

AFFINITY LAWS

Since a water pump imparts velocity to water and then converts the velocity to pressure it behaves according to a set of relationships called the "affinity laws".

These laws state the following:
1- Capacity varies directly with rotational speed.
2- Capacity varies directly with impeller diameter.
3- Head varies with the square of the rotational speed
4- Head varies with the square of the impeller diameter.
5- Brake horsepower varies with the cube of the rotational speed.
6- Brake horsepower varies with the cube of the impeller diameter.

The laws are very useful when estimating performance of a known pump at a different RPM or at a different impeller diameter.

If the affinity laws are used to calculate a new condition in a Piping System due to changing pump speed or impeller diameter, it is assumed that the system head curve is known and behaves normally. The system head will vary with the square of the flow change in a parabolic fashion.

AFFINITY LAWS

- **Flow:** $Q2 = Q1 (N2/N1)$ $Q2 = Q1 (D2/D1)$
- **Head** $H2 = H1 (N2/N1)^2$ $H2 = H1 (D2/D1)^2$
- **BHP** $B2 = B1 (N2/N1)^3$ $B2 = B1 (D2/D1)^3$
- **Where:**
  - Q = Flow in GPM
  - N = RPM
  - D = Impeller Diameter in inches
  - H = Head in feet
  - B = Brake Horsepower
- **Useful to predict new pump performance when changing pump speed or impeller diameter**

PUMP SELECTION PROCESS

The following represent a summary of some of the steps we have already covered in this class and some new ones. Follow them to arrive at a proper pump selection:

1- Determine cooling or heating loads to be pumped.
2- From equipment selections determine the GPM required for each load.
3- Total all the load GPMs to arrive at the total GPM to be delivered by the pump.
4- For the pump loop, determine the most resistant path in feet of head that the pump must handle while pumping the totaled GPM.
5- With the total head and GPM figures, select a pump from the manufacturer's pump performance curves.
   A) Select a flat curved pump for Closed Systems with control valves to minimize variation in system head at reduced loads.
   B) Select a steep curved pump for Open Systems. These systems will tend to have an extra unbalanced head to overcome in addition to the piping losses. Thus, a steep curved pump will provide high head at a constant GPM.
6- Plotting the system curve determine the final operating
   point for the selected pump.
   A) Establish horsepower
   B) Check to see what horsepower will be required if the actual system resistance is less than predicted.
      1) Will this overload the motor?
   C) Size motor accordingly

PUMP SELECTION PROCESS

- Determine cooling or heating loads to be pumped
- From equipment selections find load GPMs
- Find total pumping GPM
- Establish most resistant pumping path in loop
  - Calculate resistance
- Select pump from manufacturers data
- Flat curved pumps for closed systems with control valves
- Steep curved pumps for open systems
- Find final operating point
- Check for start-up conditions
- Select motor accordingly

SELECTION EXAMPLE

In that we have already worked through loads, established their GPMs, run totals for pumping purposes, and estimated the worst case piping resistance, we will pick up the pump selection process with a known GPM and head.

As shown below, a Closed Piping System has a 35 ft wg pressure loss when 300 GPM is flowing through the piping system.

1- Select a pump (Model, Impeller Size, RPM) that will be capable of this duty.

2- Determine what the operating point will be with the chosen pump impeller.

Pump Selection:

Using the pump curve shown on the next page we select a 7 AR at 1750 RPM.

* Use 7 inch impeller
* 3.5 Brake Horsepower

Check %MET (67% to 115% Good)

* At 35 ft MET = 350 GPM
* At 300 GPM % MET = 100 (300/350) = 86% (Good)

The only question remaining is what will the final operating point be. Our selection point falls between two impeller sizes. We could have the manufacturer trim the impeller, or we could leave the impeller at 7 inches and check how it performs against the system curve.

PUMP 7AR - 1750 RPM

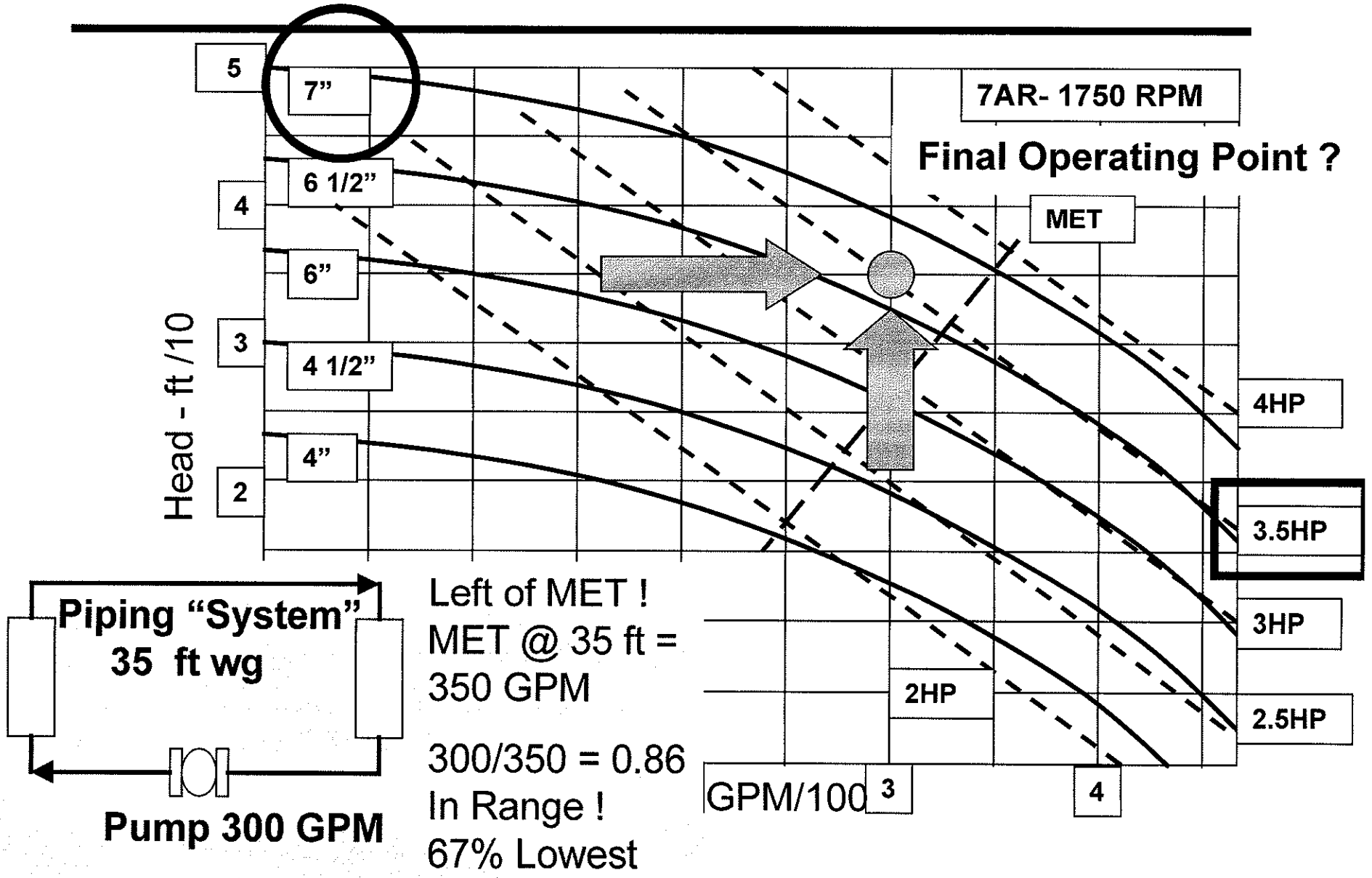

FINAL OPERATING POINT

We need to know where the 7 inch impeller will balance out with the system curve - establish the final operating point.

We know that the head in our system is 35 ft, at a flow rate of 300 GPM. Therefore, we can calculate two points on either side of this point, connect them, and plot to find the final operating point of the pump and system.

At 250 GPM, Head = $35 \times (250/300)^2 = 24.2$

At 350 GPM, Head = $35 \times (350/300)^2 = 47.8$

We now plot the two new points and connect them through the original point of 35 ft and 300 GPM. The final operating point where the pump curve crosses the system curve is at 37.5 ft and 315 GPM. The required BHP is 3.8.

Now, let's see what would happen to the pump during initial start-up when the actual resistance is less than we predicted. The system curve would lower and the balance point would shift to the right.

By following along the 7 inch impeller performance curve to the right it can be seen that the largest horsepower the pump would ever draw would be 3.9 BHP.

Therefore, we select a motor of 4 or 5 horsepower - whichever is a standard, off the shelf choice. The motor will never be overloaded.

FINAL OPERATING POINT

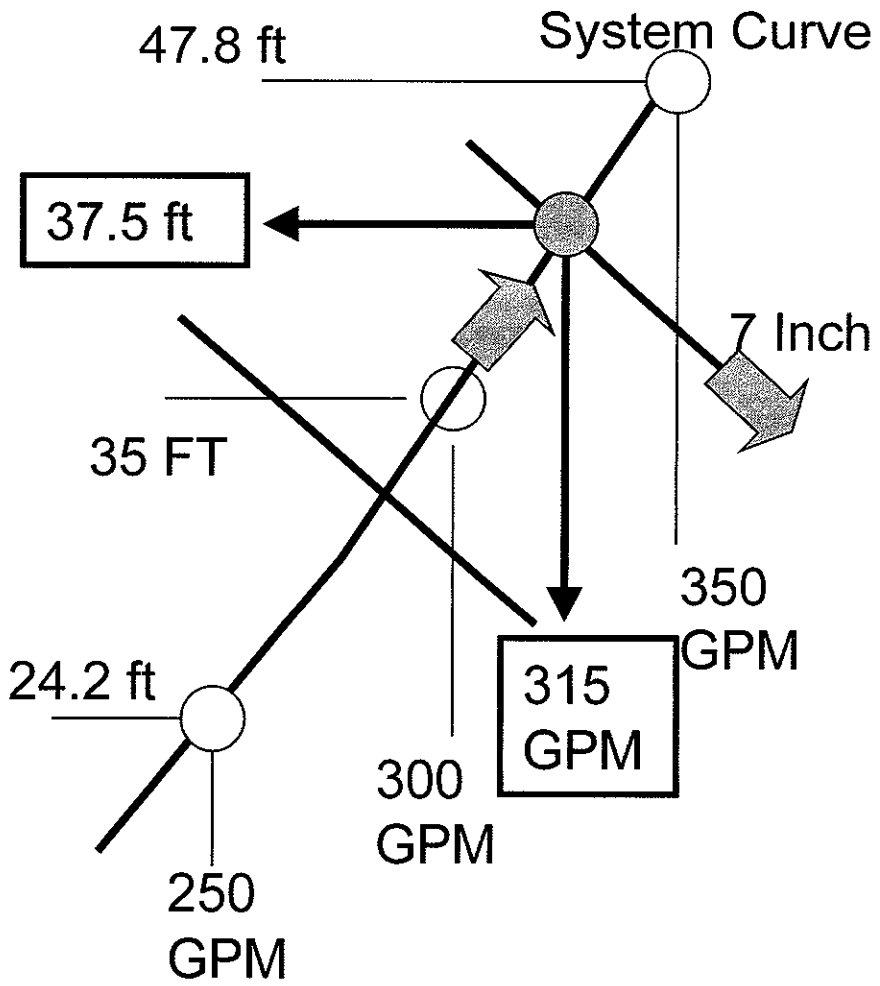

- **Plot system curve**
- **Head = 35 ft @ 300 GPM**
  - **@ 250 GPM**
    ft = 35 x (250/300)² = 24.2
  - **@ 350GPM**
    ft = 35 x (350/300)² = 47.8
- **Plot new system points and connect**
- **Final operating point**
  - **315 GPM**
  - **37.5 ft head**
  - **3.8 BHP**
- **Check overload to right**
  - **Max BHP = 3.9 with 7 IN**
  - **Choose 4 or 5 BHP motor**

IMPACT OF CONTROL VALVES

What happens in a piping circuit when a 2-way valve or valves start to throttle? How does it impact the pump? What is the impact on the control valve?

The diagram below shows a pump curve operating against a system curve for the system on the right. With all valves wide open, the system curve is (A-B-C). This consists of the piping resistance plus the wide open resistance of the control valve.

As load on the coils drop, the control valves begin to throttle back. This offers more resistance to the pump. The pump sees the higher resistance (C-D) and reduces flow through the system from (E-F).

As flow through the piping system drops, the piping resistance drops - following its system curve to point (B). Thus, the control valve has taken on the additional pressure drop from (B-D). This is typical .

In fact, the more the control valves close, the more the operating point will move further to the left on the pump curve. With all valves fully closed, the pump would "dead-head" at zero flow and the control valves would absorb the largest head (A-G). Thus, when selecting valves, you must check to see that the valve close-off pressure exceeds the pump dead-head pressure.

IMPACT OF CONTROL VALVES

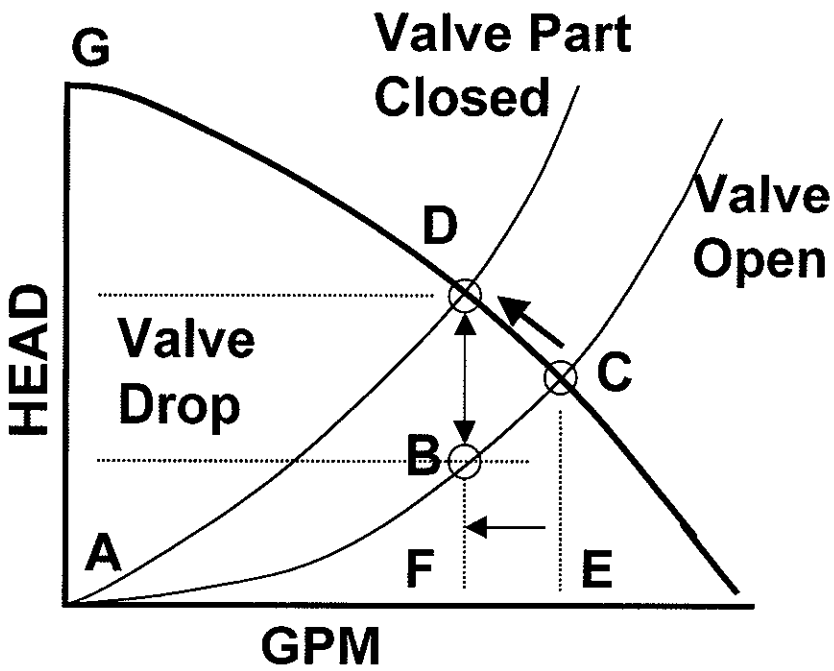

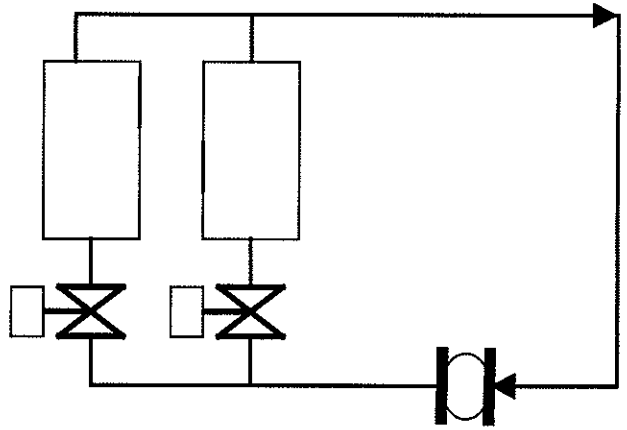

- Valves wide open
  - System curve (A-B-C)
- Valves start to close
- Resistance rises (C-D)
- Pump flow drops (E-F)
- Piping resistance drops (C-B)
- Pressure drop across valve increases (B-D)
- New system curve with valve part closed (A-D)
- Valve close-off is (A-G)

SERIES PUMPS

(Two Identical Pumps)

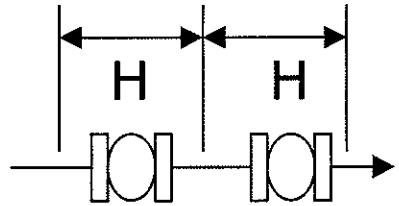

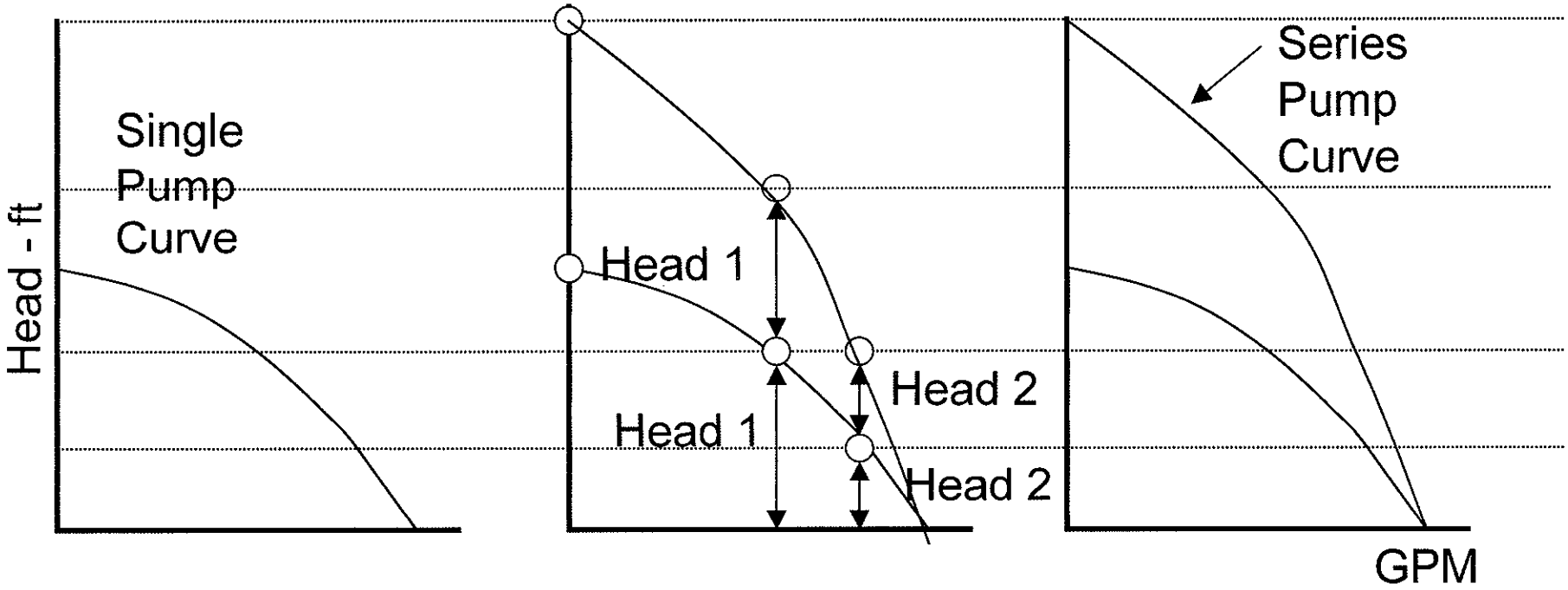

- **Two identical pumps In series**
- **Head at each GPM flow rate doubles**
- **Plot result to obtain series pump curve**

PARALLEL PUMPS

(Two Identical Pumps)

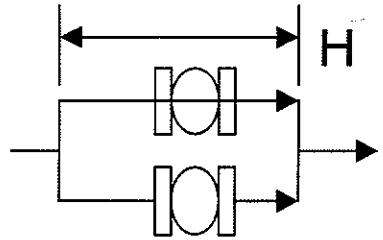

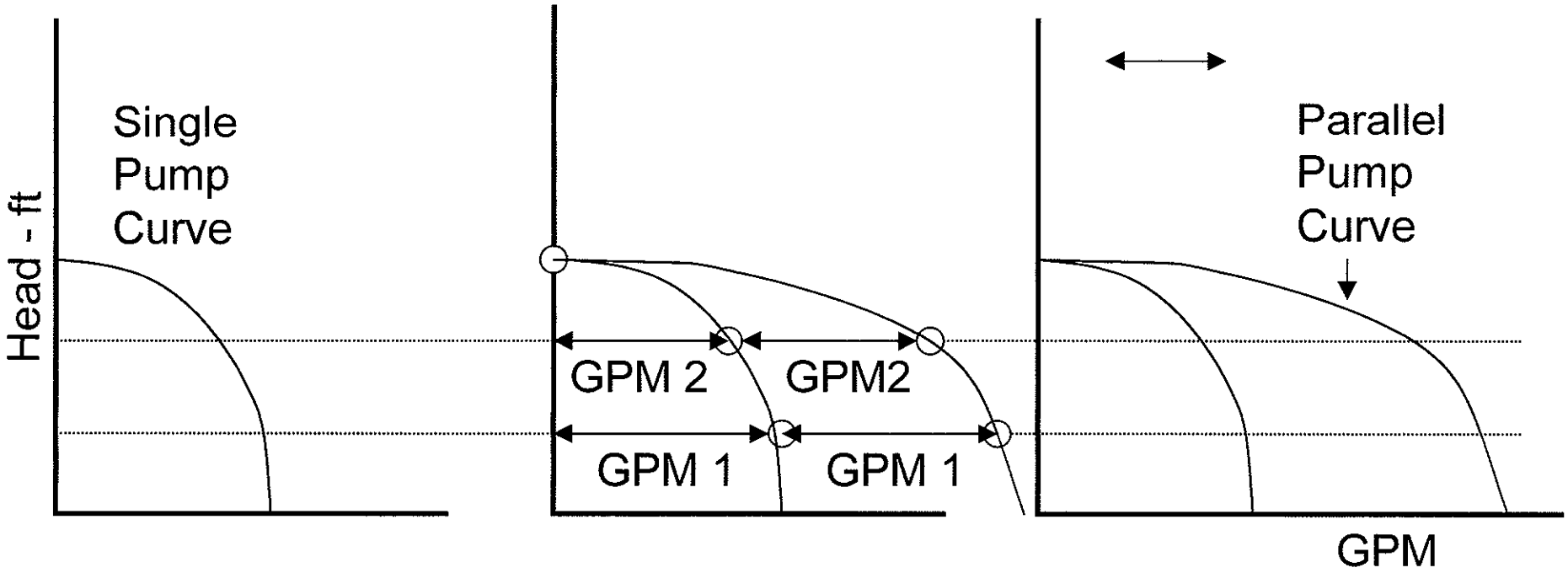

- **Two identical pumps in parallel**
- **GPM at each head doubles**
- **Plot result to obtain parallel pump curve**



DESIGN PROJECT

It is now time to make the final pump selections for the Chilled Water System for the Casino Hotel Building. Locate the Pump Selection Form in the Design Project material in the back of this book and fill it out.

You will need to select a pump from the pump curves provided in the Design Project material, plot the system curve, and arrive at a final operating point.

PUMP SELECTION FORM

(Chilled Water Loop)

- Find form in Design Project
- Total GPM needed by the building (Show how you arrived at this): _____ GPM
- Estimated worst circuit resistance from previous exercise: _____ ft wg
- Select a pump from those in the Design Project:
  - Establish final operating point
  - Head = _____ ft
  - GPM = _____
  - BHP = _____
- Attach pump curve with system curve plot

PUMP 6DK - 1750 RPM

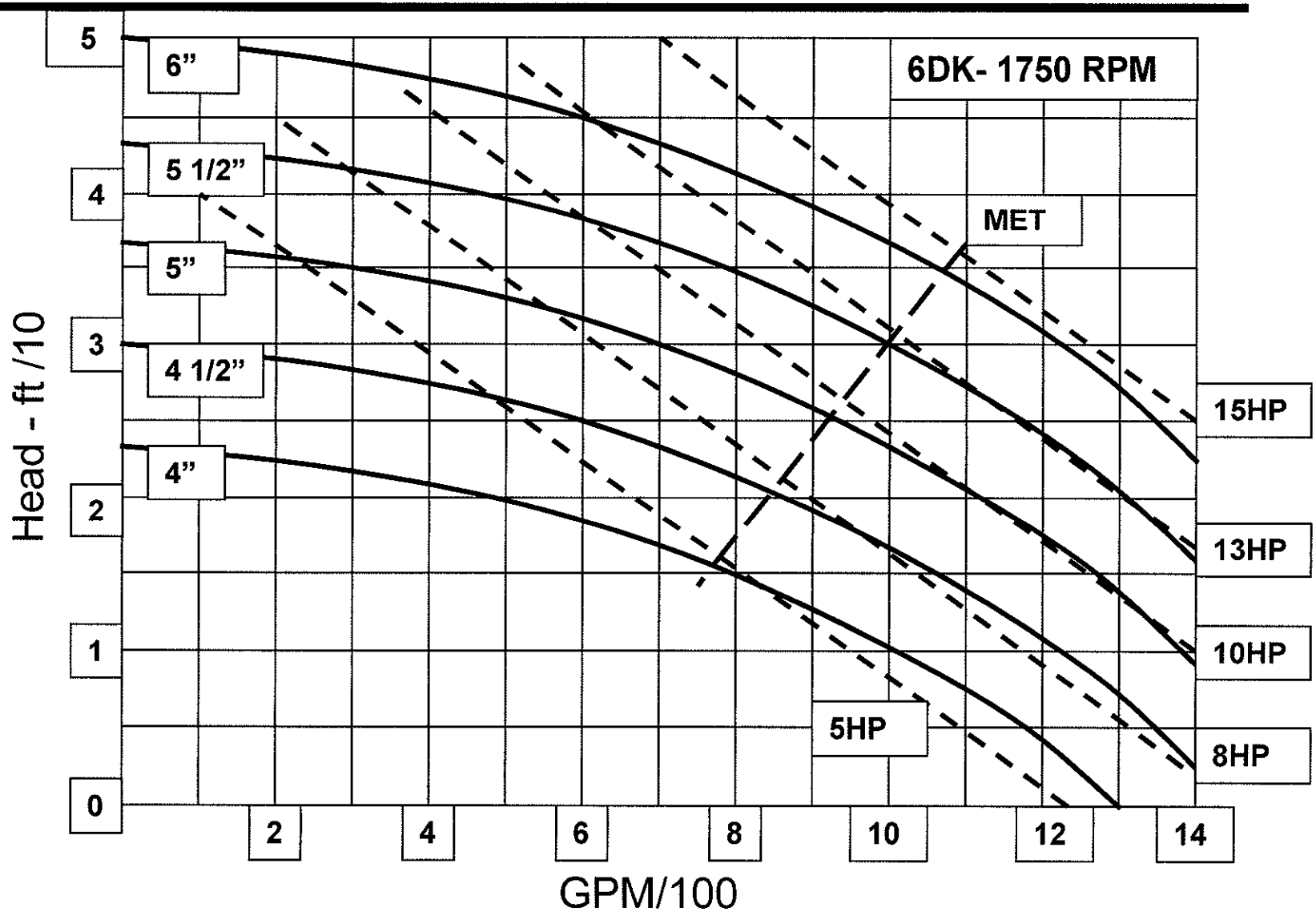



PUMP 7BM - 1750 RPM

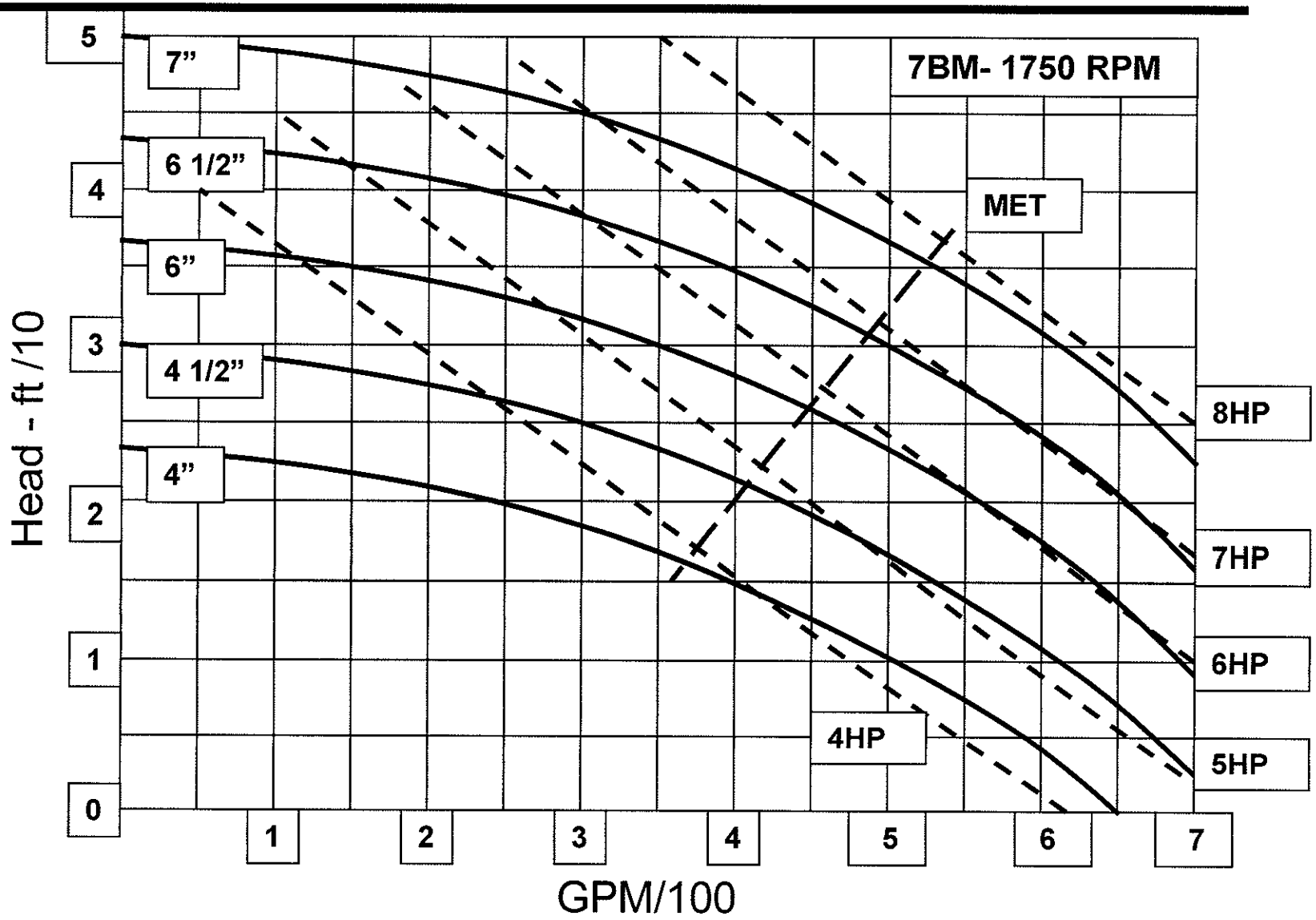



PUMP 7AR - 1750 RPM

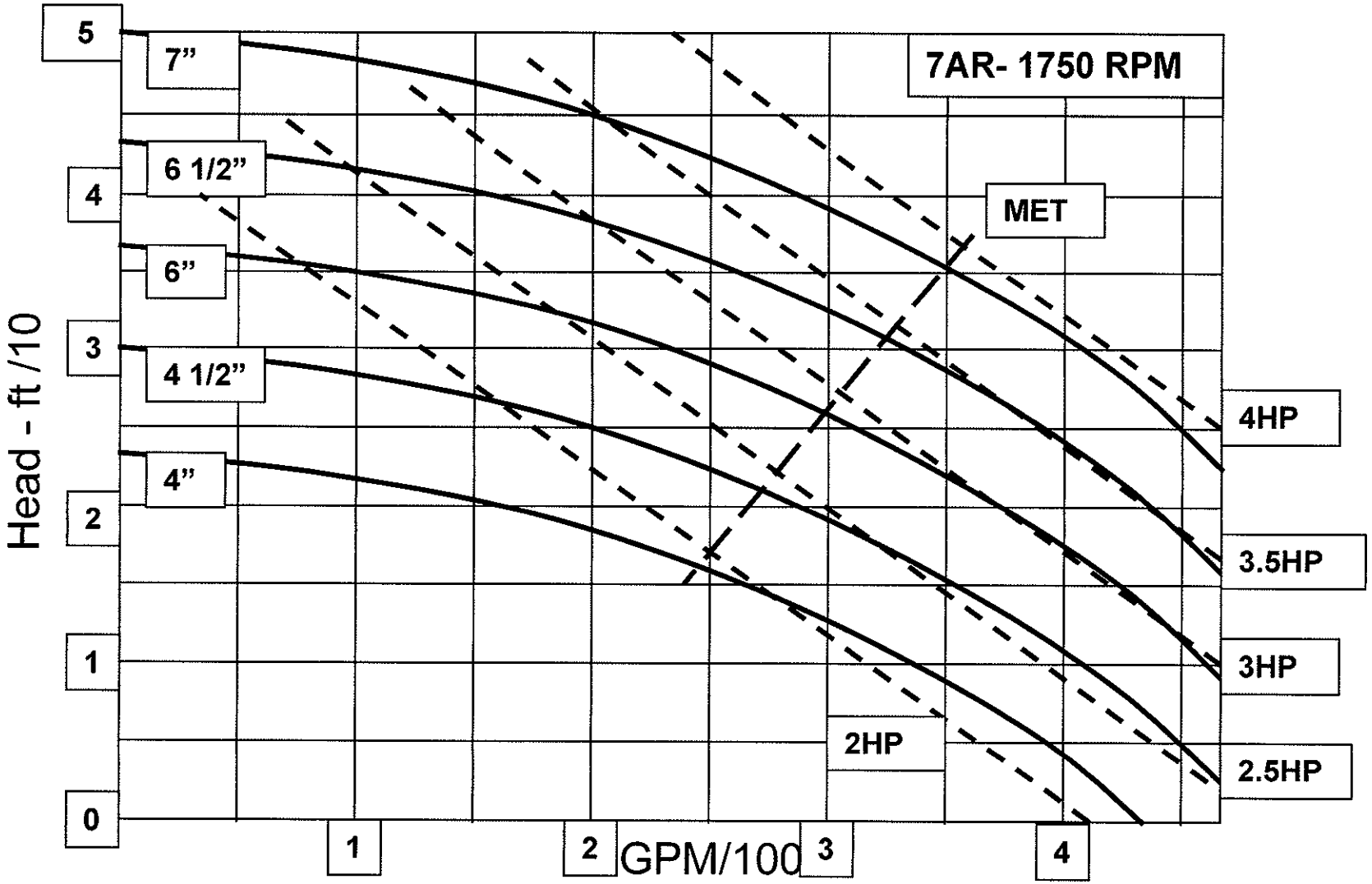



PUMP 10EK - 1750 RPM

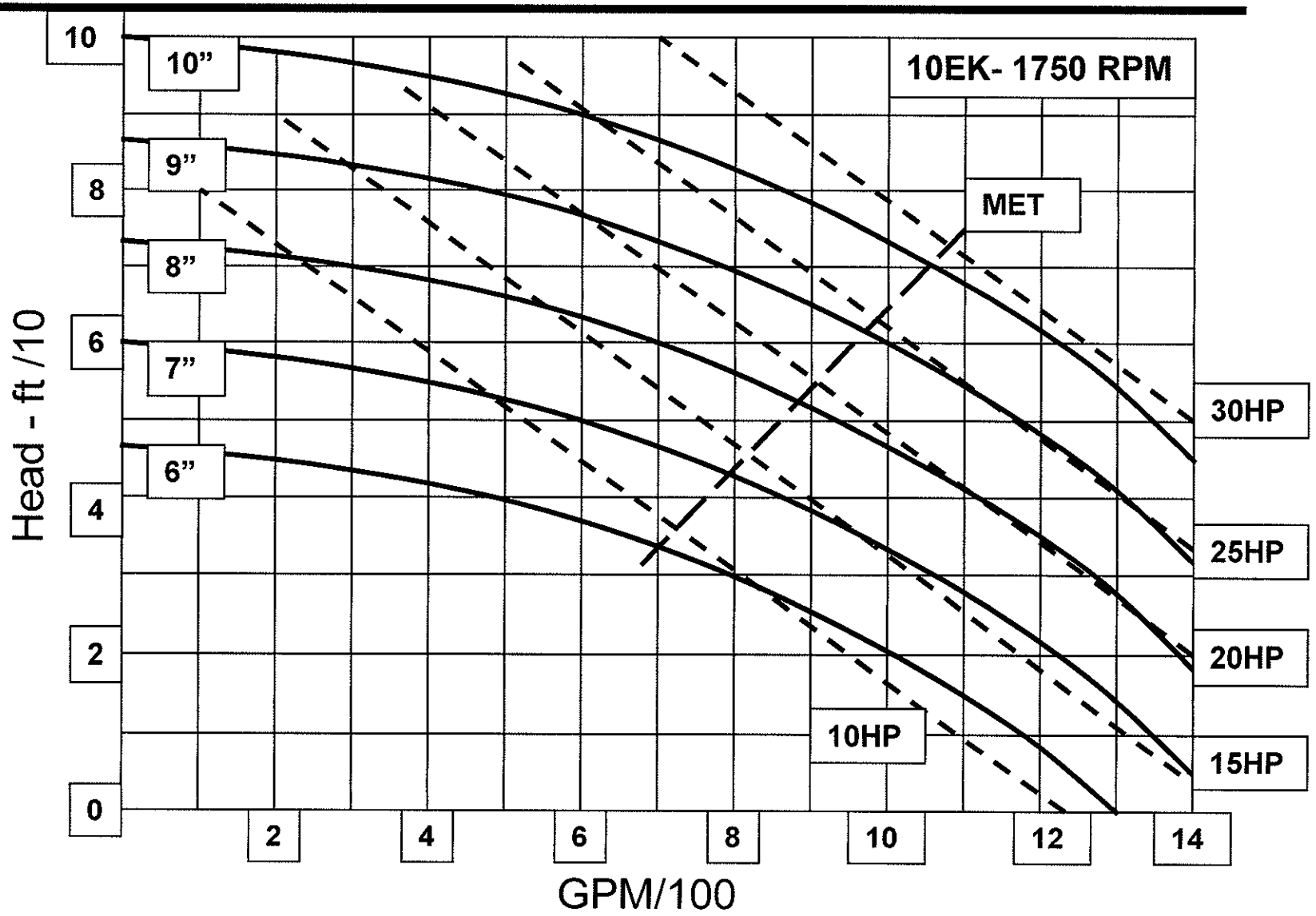

COOLING TOWER

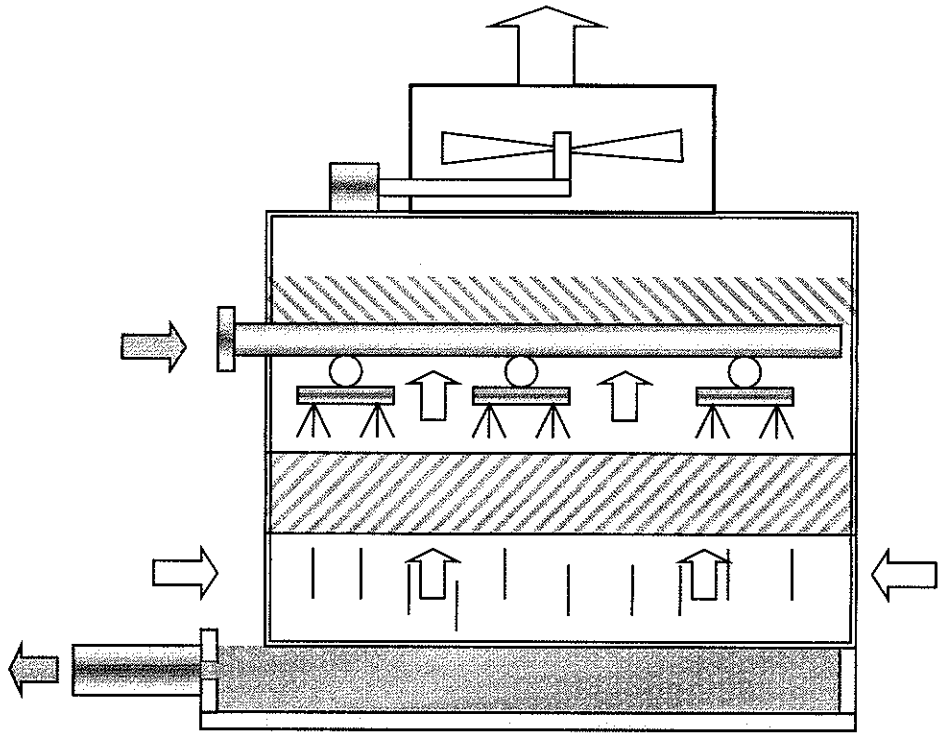

DES700

APPLIED WATER SYSTEM DESIGN

OBJECTIVES

Like chillers, cooling towers rely on the fact that when a fluid evaporates takes away heat to change state. This happens in the chiller's evaporator where boiling refrigerant absorbs heat from water flowing through the tubes.

In a cooling tower the same thing happens. Water evaporates into an air stream passing through it, and in doing so, removes heat from the remaining water and the air. The cooled water is returned to the process that heated it.

In the pages that follow, you will come to learn about how the air and water contact is established, how it is controlled, and the impact on tower size caused by changing some selection parameters. This is basic material upon which you can build.

When you complete this section you should be able to:

1- Recognize the various types of cooling towers
2- Understand the types of tower "fill"
3- Understand tower psychrometrics
4- Become familiar with common tower terms
5- Understand how approach impacts tower and chiller size
6- Understand how range impacts tower and chiller size
7- Be aware of common tower application norms
8- Select a tower using Tower Software

OBJECTIVES

- Recognize the various types of cooling towers
- Understand the types of tower "fill"
- Understand tower psychrometrics
- Become familiar with common tower terms
- Understand how approach impacts tower and chiller size
- Understand how range impacts tower and chiller size
- Be aware of common tower application norms
- Select a tower using Tower Software



DESIGN CHECK LIST STEPS

- Select control zones
- Calculate peak zone cooling and heating loads
- Select room fan coil terminals
- Select type of terminal controls
- Make piping layout
- Make condensate drain layout
- Select refrigeration machine
- *Select auxiliary equipment (cooling tower)*

FORCED DRAFT COUNTERFLOW

Cooling towers are designed and manufactured in several types, with numerous sizes available in each. Not all types are applicable for all applications. It is worth it to understand the advantages and disadvantages of each type.

In this discussion, we will consider those types that tend to be used in commercial air conditioning applications - leaving out those used in industrial type applications.

Mechanical Draft:
Towers of this type use either single or multiple fans to provide flow of a known volume of air through the tower. Their thermal performance tends to be stable and is affected by fewer psychrometric variables. The use of fans provides a means for regulating tower capacity by regulating air flow. This is accomplished by modulation of fan speed or cycling fans.

Mechanical draft towers fall into two types:
1- Forced draft
2- Induced draft

Forced draft:
The page below shows a typical forced draft tower. The fan is located in the tower's air entrance, and air is "forced" through the tower. Towers of this type are characterized by high entrance velocities and low exit velocities. They are susceptible to recirculation and are considered to have less performance stability than induced draft towers.

In cold climates, forced draft fans become subject to icing and imbalance when moving recirculated or heavily moisture laden air.

These towers are typically furnished with Centrifugal fans which consume more horsepower than propeller types. However, they are capable of operating against greater static pressures, so the fans can be located away from the tower where recirculation can be avoided.

The towers tend to be compact and less costly than the induced towers.

FORCED DRAFT COUNTERFLOW

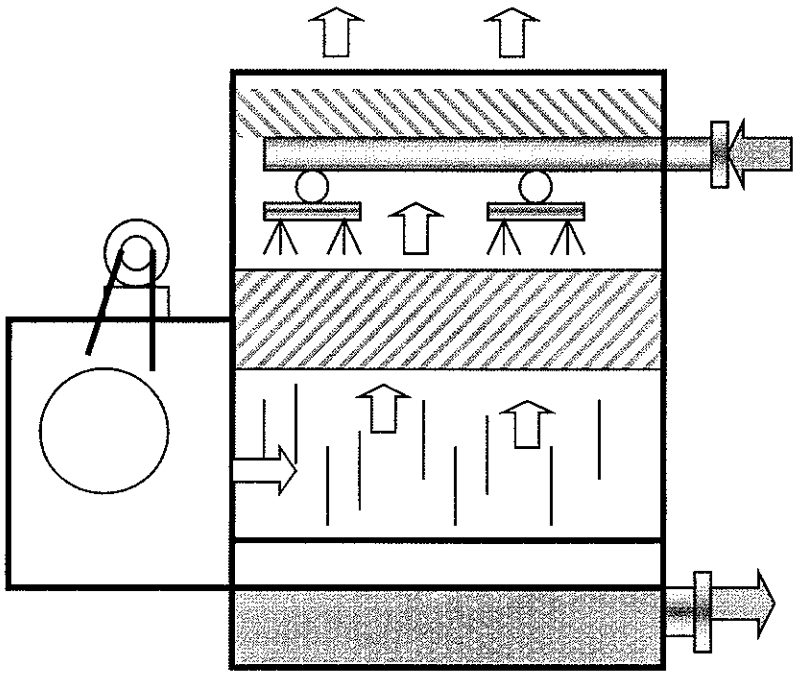

- Fan forces air thru tower
- Use centrifugal fans
  - High horsepower
  - High static
- High entrance velocity
- Low exit velocity
  - Tend to re-circulate discharge air
  - Fan tends to ice in cold climates
- Smaller, less costly construction
- Counter-flow
  - Air flows opposite to water
- Applications
  - HVAC (chillers), clean process

INDUCED DRAFT COUNTERFLOW

Air is drawn through the tower by propeller fans in an induced draft tower. This type of tower tends to have discharge velocities 3 to 4 times higher than their entrance velocity (equivalent to about a 5 mph wind). Therefore, there is little tendency to recirculate discharge air.

With the fan in the warm air stream, the danger of icing is minimized. Induced draft towers have gained widespread acceptance from over the range of 15 GPM to 700,000 GPM capacities.

Both in the forced draft and induced draft tower examples shown, the air flow is counter-flow to the water flow, and is another means of tower classification.

INDUCED DRAFT COUNTERFLOW

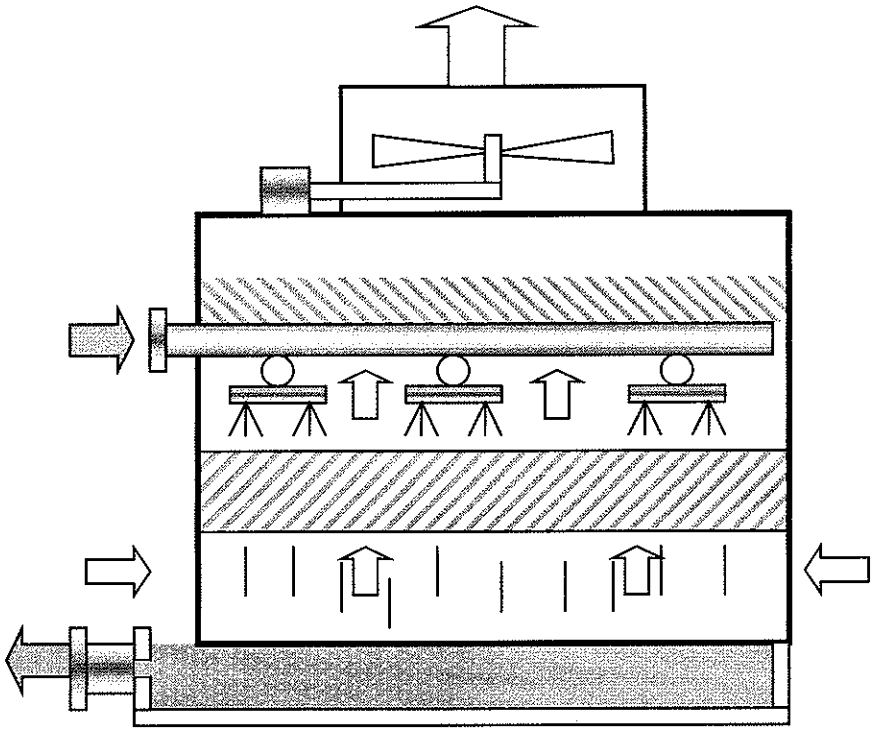

- **High exit velocity**
  - Like a 5 MPH wind
  - No recirculation
  - Fan in warm air stream
  - No fan icing
- **Widely used**
  - 15 to 700,000 GPM
- **Counter-flow design**
  - Air flows opposite water
- **Applications**
  - HVAC (chillers)
  - Clean process



COUNTER-FLOW CHARACTERISTICS

- Either extended air intake plenum (forced) or discharge plenums (induced)
- High pressure water spray nozzles
- High air pressure losses
- High pump head
- High fan horsepower
- Small size equipment
- Low cost

INDUCED DRAFT CROSSFLOW

Counter-flow towers have fill through which air passes horizontally across the downward fall of water. Water is delivered to water inlet basins above the fill areas and is distributed by gravity through metering orifices in the floor of the basins to the fill material.

Thus, no pressurized spray system is required, and pumping horsepower is reduced. Since the fill is readily available on the outside, service of sections of the tower can be accomplished while the tower is still operating.

Cross-flow towers may have fill on one or two sides with casings on the other sides. Single side fill towers are good when prevailing wind conditions dictate, or when access to the tower is limited.

INDUCED DRAFT CROSSFLOW

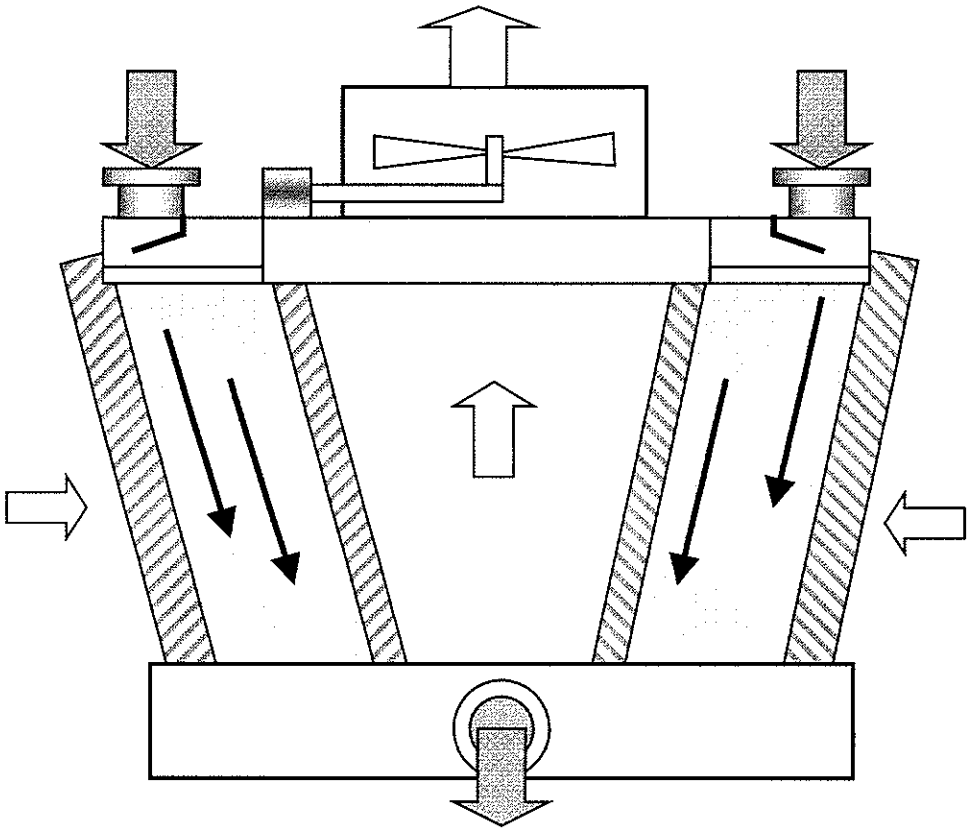

- Water feed by gravity
  - Low pump HP
- Air passes through fill horizontal to water flow
- Fill located in banks on 1 or 2 sides
- Low air pressure loss
  - Low fan HP
- Larger in size
- More first cost
- Applications
  - HVAC (chillers)
  - Industrial cooling

COOLING TOWER FILL

- Tower fill = heat transfer
- Manufacturers try to develop fill types that enhance heat transfer
- Three basic types
  - Splash type fill
  - Film type fill
  - Spray (no fill)



SPLASH-FILLED COUNTERFLOW

Splash type fill breaks up the water and interrupts its vertical progress, by causing it to cascade through successive offset levels of parallel splash bars. Maximum exposure of the water surface to the passing air is thus obtained by repeatedly arresting the water's fall and splashing it into small droplets, as well as by wetting the surface of the individual splash bars.

Splash fill is characterized by low air pressure losses, and is not conducive to clogging. However, it is very sensitive to inadequate support. The splash bars must remain horizontal, otherwise the water will be channeled through the fill in separate flow paths and the performance will be degraded.

Treated wood lath (primarily Douglas Fir) has predominated for years as the splash bar material. Currently, however, plastics have gained predominance. Steel or aluminum is occasionally used in large steel framed towers for strength purposes.

Splash type fill is used in either cross-flow or counter-flow towers.

SPLASH-FILLED CROSSFLOW

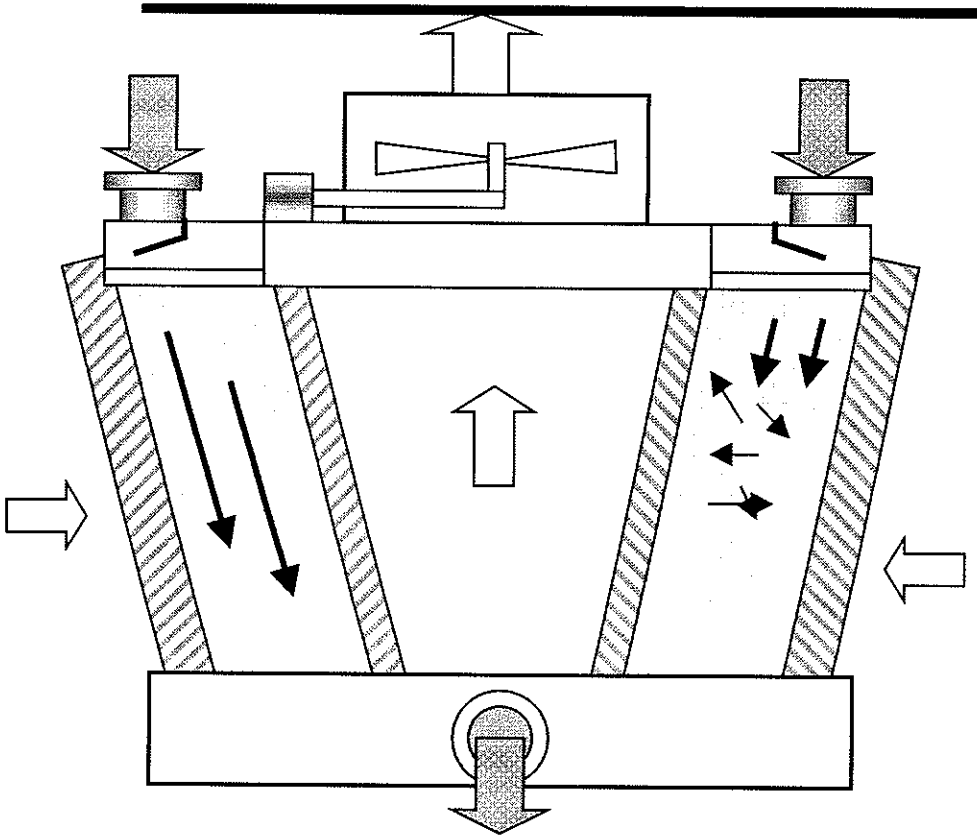

- Splash bars break up water
- Interrupt it's vertical fall
- Splashes into small droplets
- Successive offset levels
- Maximizes water surface area
- Splash bar material
  - Wood lath or plastic bars
- Used mostly with crossflow
- Low air pressure loss
- Not easily clogged

TYPICAL FILM-TYPE FILL

Film type fill causes the water to spread into a thin film, flowing over large vertical surface areas, to promote maximum exposure to the air flow. It can provide a more effective cooling capacity within the same amount of space compared to splash types. However, it is very sensitive to poor water distribution and clogging. Tower design provides uniform distribution of air and water films.

Film is generally made of PVC type plastic which is easily molded into shapes that increase surface area.

TYPICAL FILM-TYPE FILL

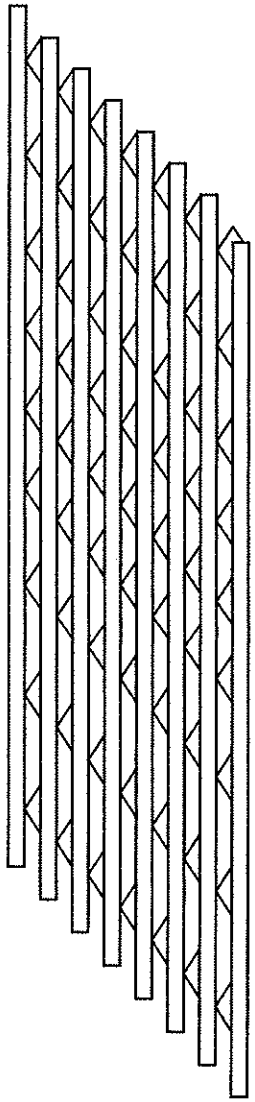

- Causes water to spread into a thin film
- Water flows over large vertical areas
- More efficient heat transfer
- More easily clogged
- PVC is common material used

SPRAY-FILLED TOWER

Spray-filled towers have no heat transfer fill surface, and depend only on the water break-up afforded by water nozzle's atomization of the water and the air-water contact as the two fluids flow in a counter-flow manner through the tower.

These type of towers are used where high temperature water must be cooled, but not for normal condenser applications. They are also used where poor water conditions could damage the heat transfer surface of the fill.

SPRAY-FILLED TOWER

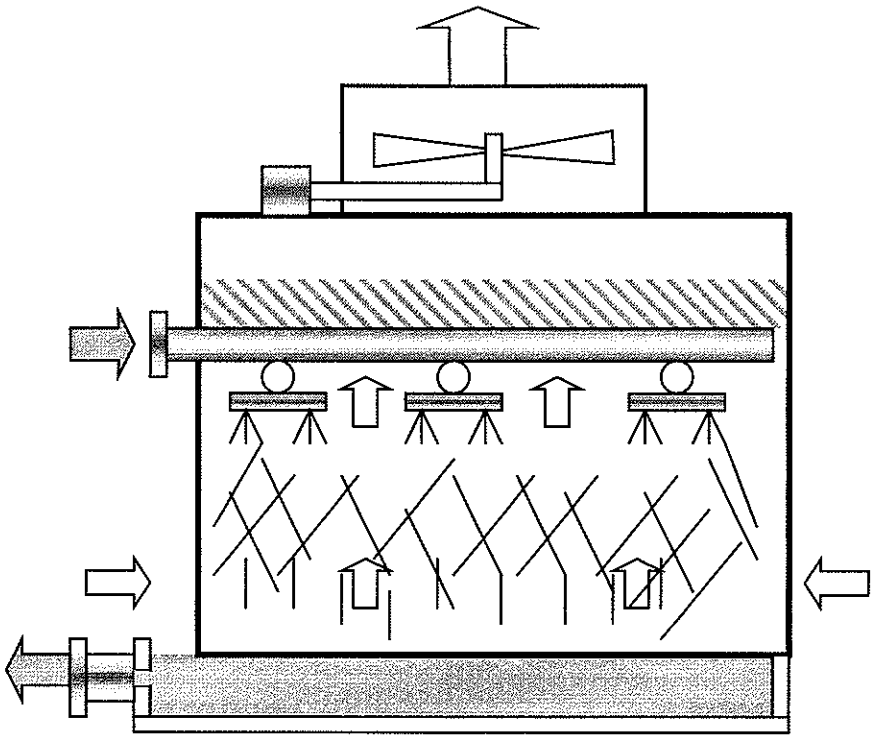

- No fill material
- Rely on air-water contact
- High pressure nozzles atomize water into a fine mist
- Higher pumping costs
- Lower first cost
- Not as efficient as other fill types
- Use to cool high temperature water
- Not for chillers

COOLING TOWER PERFORMANCE
EVAPORATIVE COOLING

Evaporative cooling, as discussed previously, uses recirculating water sprays to saturate the air. We will elaborate on this principle in light of the knowledge we have acquired so far.

Assume that the temperature of the spray water and the leaving air is the same as the wet bulb temperature of the entering air.

The air is cooled and humidified and becomes saturated at a temperature equal to that entering wet bulb. The pscch chart below shows the way evaporative cooling appears on the psychrometric chart. The process takes place along the wet bulb line of the entering air and approaches the saturation line.

The sensible heat given up is exactly equal to the latent heat required to saturate the air with moisture.

If a continuous supply of spray water is available at a temperature **below the dewpoint of the entering air**, the air is cooled and dehumidified by the spray water. One way the spray water might be cooled below the dewpoint is by using a water chiller in a refrigeration system. Another method uses a cooling coil with recirculating water sprays.

The water sprays improve the performance of the cooling coil during summer operation and provide close control of humidity as well as temperature. This process can be reversed in winter when it is desirable to heat and humidify the air. In this case, heat is added to the spray water to keep the wet bulb temperature of the leaving air above that of the entering air. The heated spray water is cooled, releasing heat and humidifying simultaneously

COOLING TOWER PERFORMANCE EVAPORATIVE COOLING

In a perfect process the spray water temp. = Leaving air DB temp @ saturation = entering air WB = 65F

Heat to evaporate water & saturate air also cools the air. Air is cooled & humidified.

If temp of spray water < 40DP, air is cooled & dehumidified. Water acts like a cooling coil.

Warm spray water can also heat the air

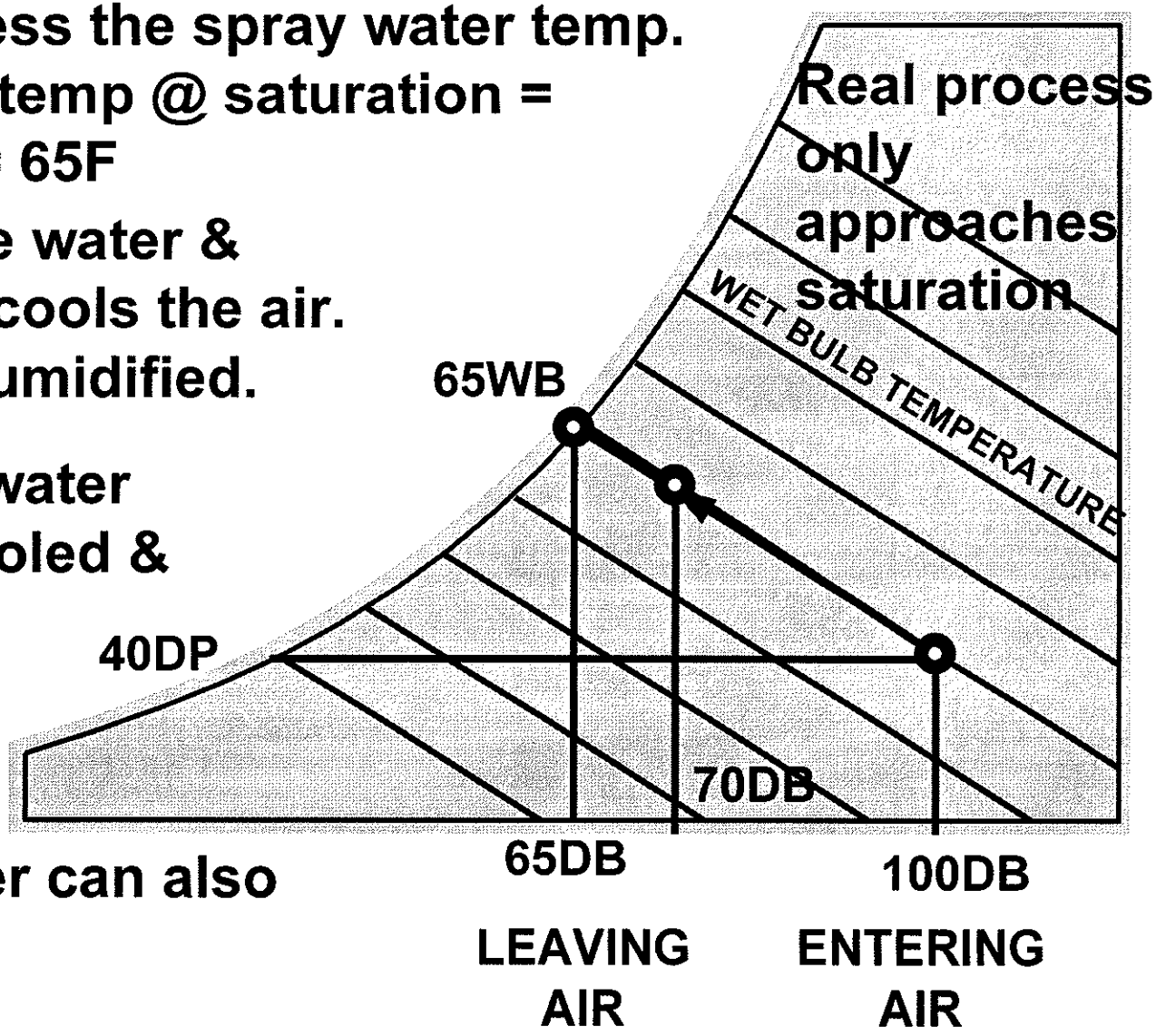

COOLING TOWER –NO LOAD

A cooling tower acts as an evaporative cooler when the compression equipment is cycled off and there is no heat added to the condenser water loop by the condenser. Then the condenser water temperature entering and leaving the Cooling tower will equalize, as shown here at 85° F. The tower will cool and saturate the air flowing through it just like the swamp cooler. In fact, under these zero-load conditions, with the condenser pump running, the psychrometric plot looks just the same as the swamp cooler.

COOLING TOWER –NO LOAD

With no load, entering & leaving water temp will equalize @ 85F.

Water will evaporate into air.

Air will cool to saturation 65F.

Tower is a swamp cooler

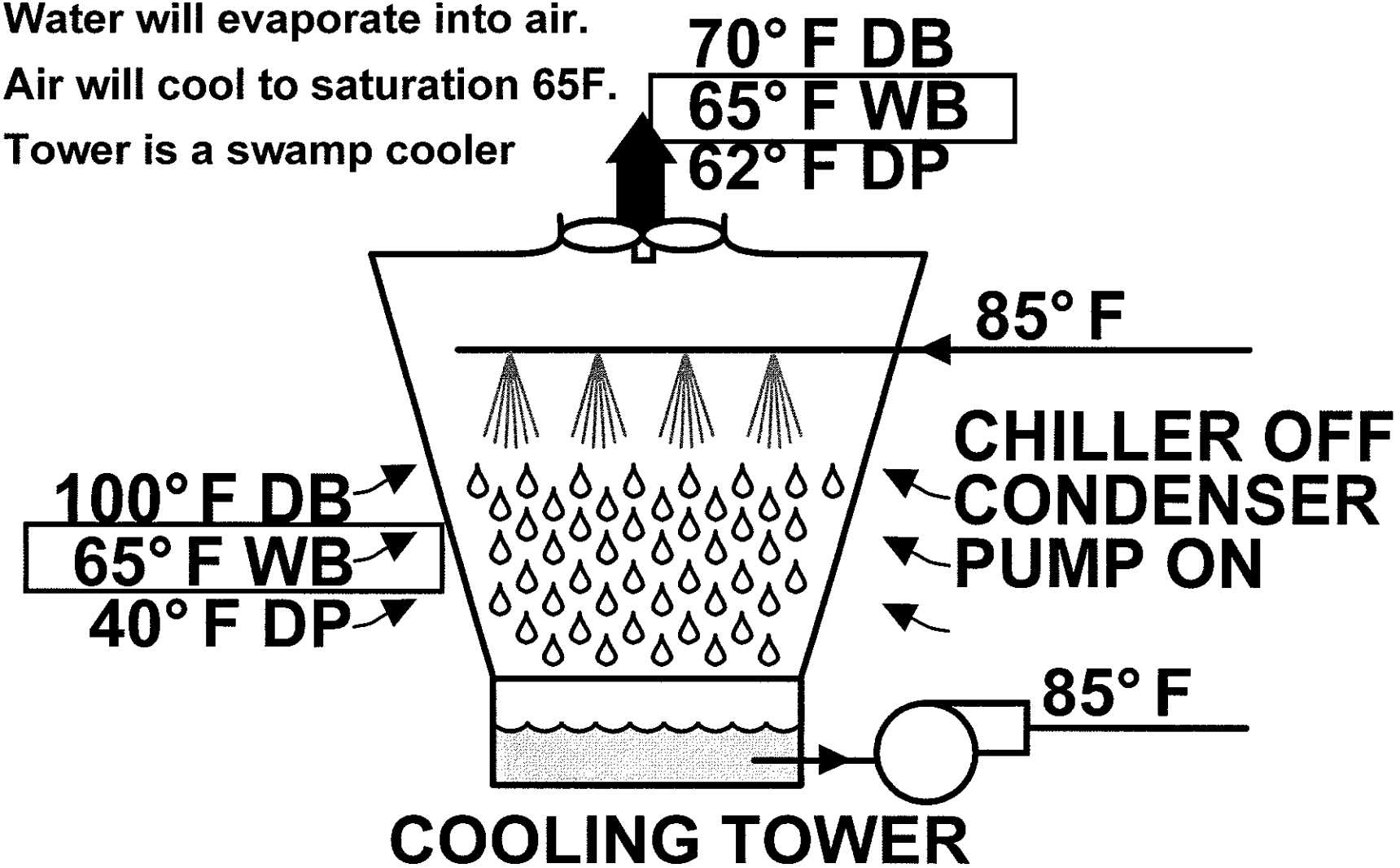

COOLING TOWER-PEAK LOAD

When the compression is running, heat is rejected first to the condenser, and then to the condenser water, raising it about 10° F from about 85° F to 95° F at peak load conditions. The cooling tower uses evaporation to bring the condenser water temperature back down to about 85° F, even when the outdoor dry bulb temperature is 100° F. Since the outdoor air dry bulb is higher than the incoming condenser water temperature, sensible cooling of the water by the outdoor air is impossible. Latent cooling by evaporation is the way the tower cools the condenser water so that it can be re-circulated to the condenser and continue removing heat rejected from the mechanical refrigeration system by the condenser.

COOLING TOWER – PEAK LOAD

Water is cooled from 95F to 85F as it passes through tower.

Water is cooled by evaporation - water vapor added to the air.

Entering air is cooled and humidified - approaching saturation @ the leaving water temperature.

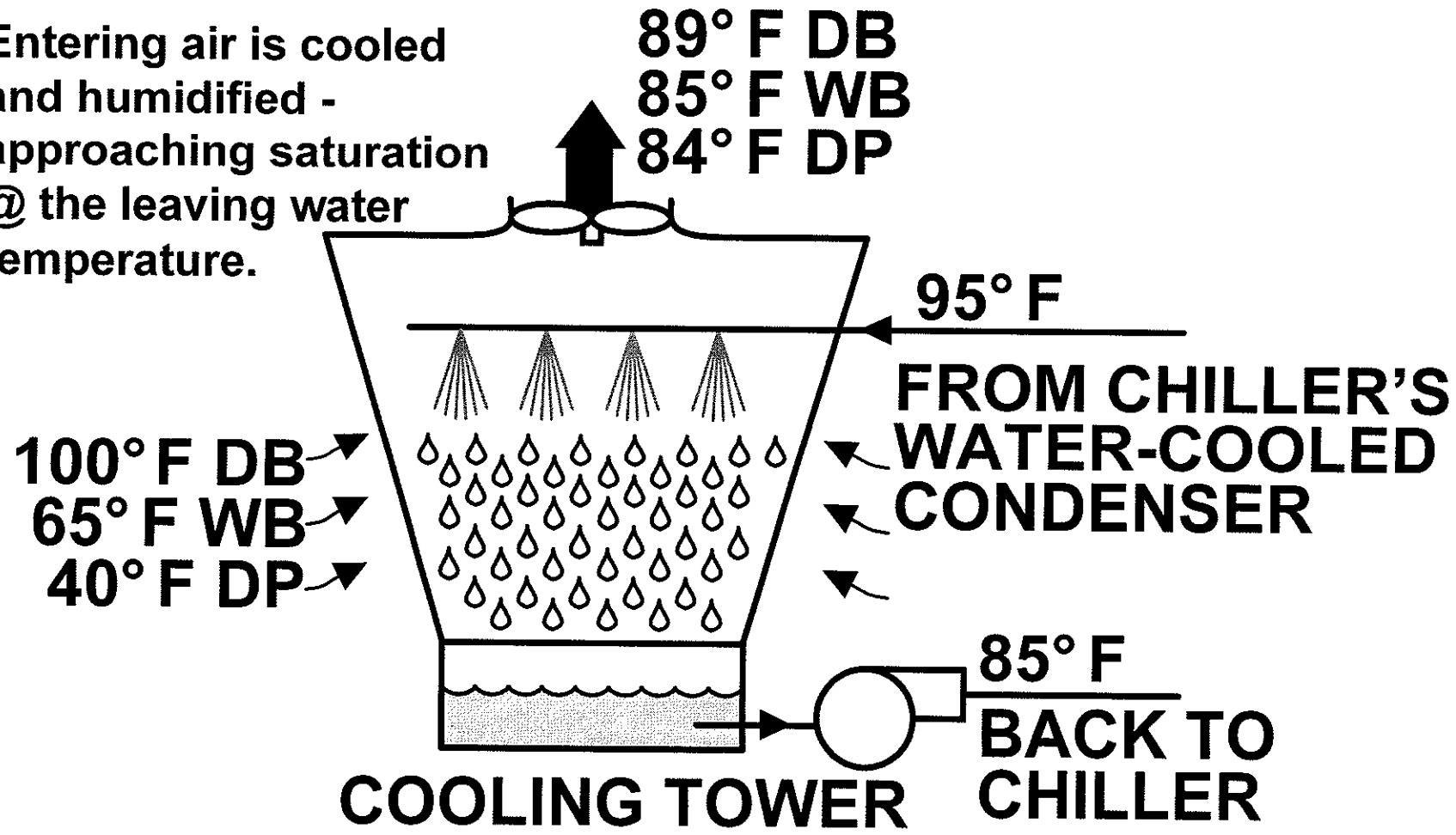

COOLING TOWER-PEAK LOAD

When operating with the compression equipment running, the cooler tower functions similar to an evaporative cooler with heat added to the spray water. The heat is added by the mechanical refrigeration system via the condenser. For example, when the outdoor air temperature is 100° F/65° F and the condenser water enters the tower at 95° F, a reasonable leaving air condition is 89° F/85° F. To accomplish this, the air passing through the tower has been greatly humidified, increasing in absolute humidity from 36 to 178 grains per pound of dry air. The outdoor air has also been slightly cooled, from 100° F to 89° F. At less than peak cooling conditions, as outdoor air dry bulb temperature drops, the outdoor air may increase somewhat in temperature, rather than decreasing.

The principles discussed in this TDP have many applications in the air conditioning industry. Psychrometrics is the backbone of air conditioning, and a thorough knowledge of the psychrometric chart is necessary for efficient and economical air conditioning design.

COOLING TOWER-CHILLER ON – PEAK COOLING LOAD

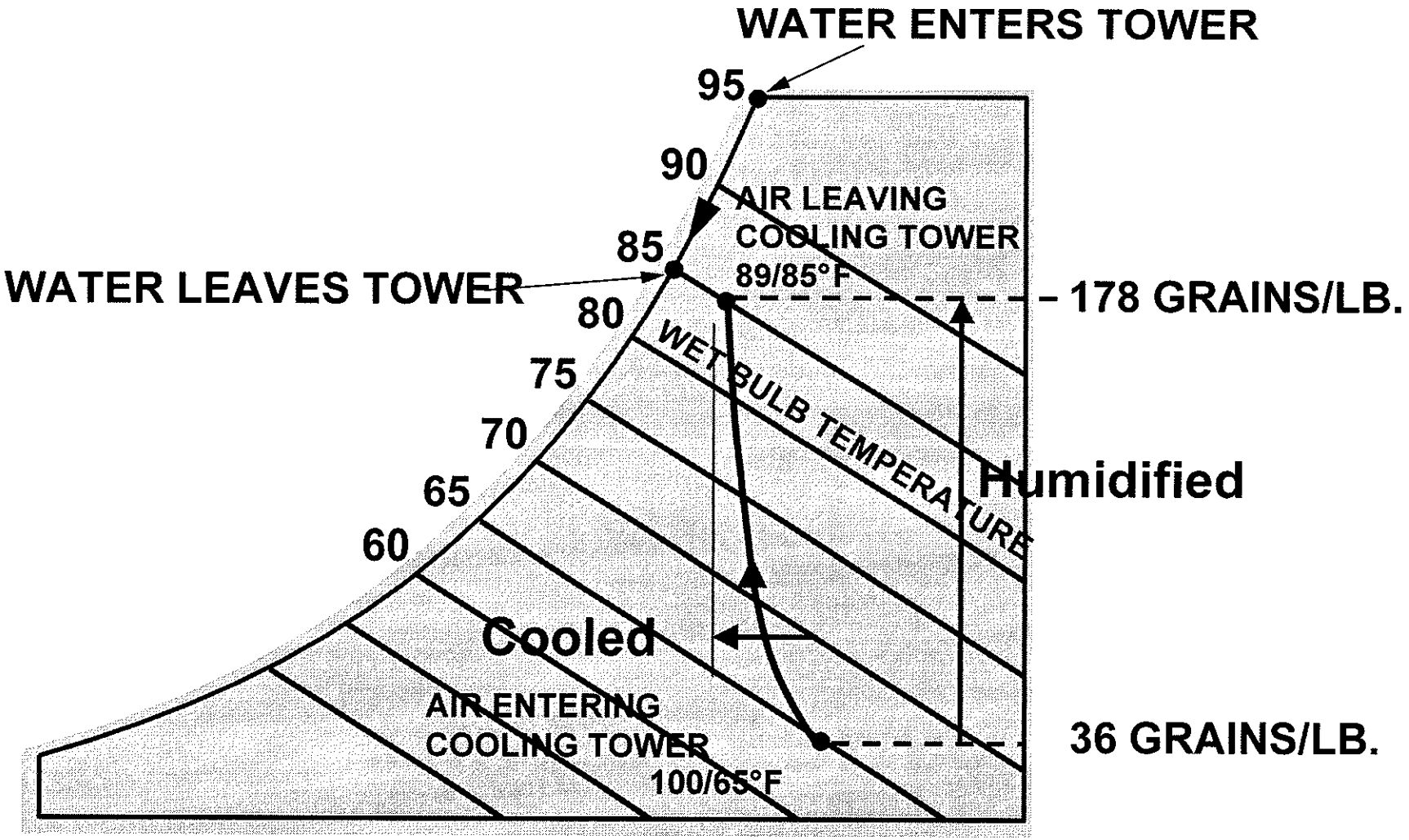

TOWER TERMS

Calculating Tower Heat:
The heat load of the tower is the heat rejected from the condenser of the chiller. From the towers perspective, here are some terms commonly used:

GPM = Water flowing through the tower.
Range = Tower (Entering Temp - leaving Temp.)
500 = 8.33 lb/gal x 60 min/hr

The above are used to determine the tower heat capacity as follows:

Tower BTUH = GPM x R x 500

Tower Operating Wet Bulb Temperature (WB):
The water passing through the tower approaches the air's wet bulb temperature. In selecting a tower, we need to determine the worst case condition under which the tower must function. Thus, the WB we are concerned with is not the mean coincident WB - that is an average type value.

When selecting a tower, the 0.4% WB from the ASHRAE Fundamentals book located on chapter 26, Table 1, WB/MDB column should be used.

Approach:
This is defined as the difference between the tower leaving water temperature and the design WB temperature. An approach of 7 or 8 F is typical.

TOWER TERMS

- **Heat load in Btuh (Q) = GPM x R x 500**
  - GMP = water flowing through tower
  - R = range = (entering - leaving) tower temperatures
  - 500 = 8.33 lb/gal x 60 min/hr
- **Air wet bulb temperature**
  - Cooled tower water approaches this temperature
  - Use ASHRAE design data to find
    - Recommend 0.4% wet bulb from ASHRAE fundamentals, chapter 26, table 1, WB/MDB column
    - Weather exceeds only (8760 hours x 0.004 = 35 hr/yr)
    - DON'T USE MEAN COINCIDENT WB (MWB) COLUMN
- **Approach**
  - Difference between water temperature leaving the tower and the 0.4% wet bulb temperature

TOWER TERMS

In a chiller system working with a cooling tower, the tower must get rid of the chillers condenser heat. The condenser heat (total heat rejection) is equal to the evaporator tons plus the compressor heat of compression. The efficiency of the chiller refrigeration cycle thus influences the amount of heat the tower must process for each evaporator ton. Let's look at a couple of examples:

An evaporator ton = 12,000 Btuh
Typical Heat of compression ranges around 1.2

At 1.20 a tower ton = 12,000 x 1.2 = 14,400 Btuh
At 1.25 a tower ton = 1.25 x 12,000 = 15,000 Btuh

There is a traditional figure used of 3.0 GPM per ton for the condenser circuit. This comes from the following:

GPM = (15,000 Btuh)/ (10 x 500) = 3.0
Where 10 is the range of the tower water temperature

In today's market, it is not unusual to see a heat rejection ratio of 1.15 for larger chillers. Thus, tower size is reducing as chillers become more efficient.

TOWER TERMS

- **Cooling tower ton:**
  - Chiller condenser heat rejection = evaporator tons + heat of compression
  - Evaporator ton = 12,000 Btuh
  - Typical heat of compression is 20 to 25% more
  - Tower ton = 12,000 x 1.2 = 14,400 or
  - Tower ton = 12,000 x 1.25 = 15,000 Btuh
- **Newer chillers are at the 1.15 level**
- **Older chillers are at the 1.25 level**
- **Traditional condenser flow is 3.0 GPM per evaporator ton**
- **At 15,000 Btuh, and a 10F range, the tower flow rate would be:**
  - GPM = (15,000) / (10 x 500) = 3.0 (3.0 GPM/ evaporator ton)

APPROACH AND RANGE

APPROACH

The approach is fixed by the size and efficiency of a cooling tower. A large tower of average efficiency will deliver cold water at a temperature that approaches the air's wet bulb temperature no closer than a somewhat smaller tower having significantly better efficiency.

Given two towers of equal efficiency, operating with proportionate fill and air flow rates, the larger tower will produce colder water. The graph below shows this. Given the base tower at a 1.0 size, increasing the tower by a factor of 2.0 would lower the approach from 15 F to 7 F. With the same wet bulb temperature, the larger tower would produce colder water.

Also, note that the curve tends to become asymptotic at an approach of 5 F. It is for this reason that tower manufacturers will not guarantee an approach less than 5 F.

What would be the impact on the chiller if the approach were lowered?

RANGE

The page after next is a plot of the effect of range on tower size. It indicates that increasing the tower range tends to decrease the size of the tower. Increasing the range means that the tower entering temperature is rising and the tower GPM is decreasing.

What would be the impact on the chiller if the range were increased?

APPROACH VERSUS TOWER SIZE

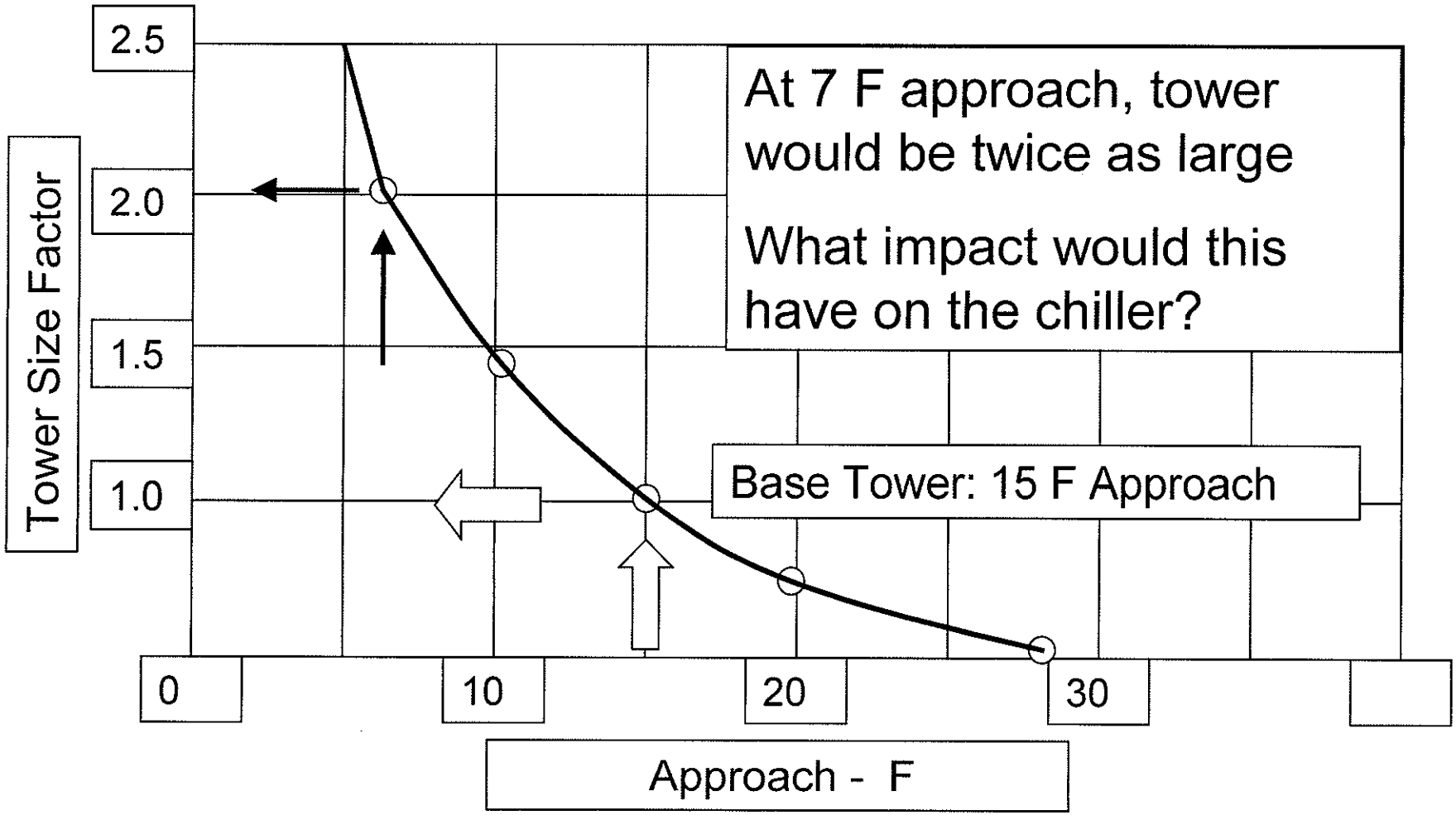

APPROACH VERSUS TOWER SIZE

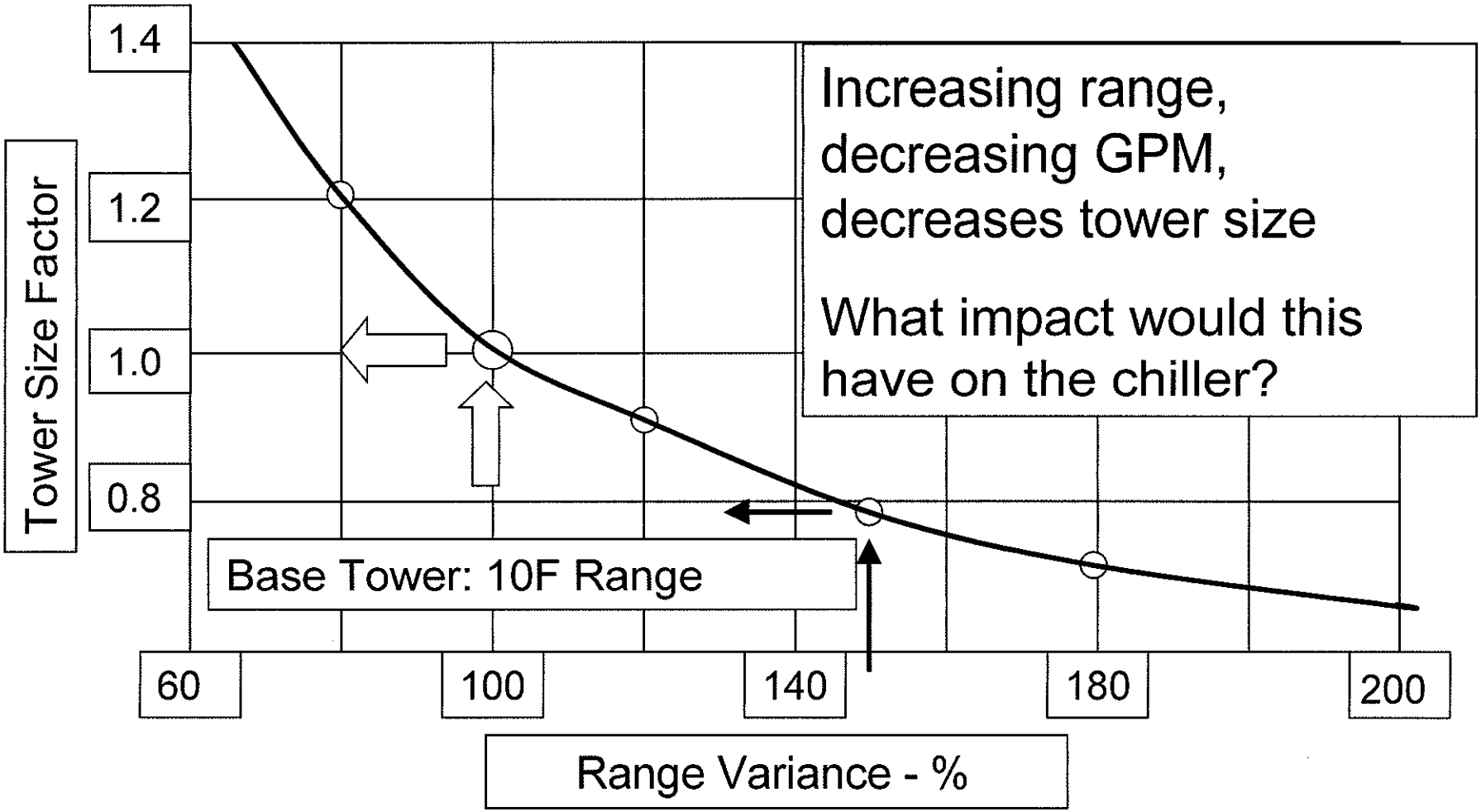

FACTORS AFFECTING TOWER SIZE

When this factor is reduced:		the tower size is:	the chiller size is:
GPM	- Reduced	Decreased	Increased
Approach	- Reduced	Increased	Decreased
Wet Bulb	- Reduced	Increased	Decreased

- Whatever works to make the tower smaller, also makes the chiller larger. !!!
- The designer must optimize the combination of chiller with tower

APPLICATION TIPS

The next three pages provide some application tips for cooling towers. The key is that a tower likes to operate - like a chiller - with constant water flow. A tower's capacity is best varied by varying the air flow through it. Therefore, the tower location should never present a situation that compromises the access of the tower to fresh outdoor air.

Like air cooled chillers, low ambient conditions are best handled with a variable speed fan on the tower.

Finally, there is nothing magic about 85 F water temperature off the tower. It is a function of the outdoor wet bulb. Let it fall to the chiller minimum operating range. The chiller's efficiency will improve by 1% to 3% for every 1 F drop in entering condenser water temperature.

APPLICATION TIPS

- **Place in unobstructed environment**
  - No interference with air flow
  - Minimum clearance from enclosure wall
  - Tower discharge to be flush with top of enclosure wall
  - Single air inlet unit to face the prevailing wind
- **Place tower basin above the chiller (gravity)**

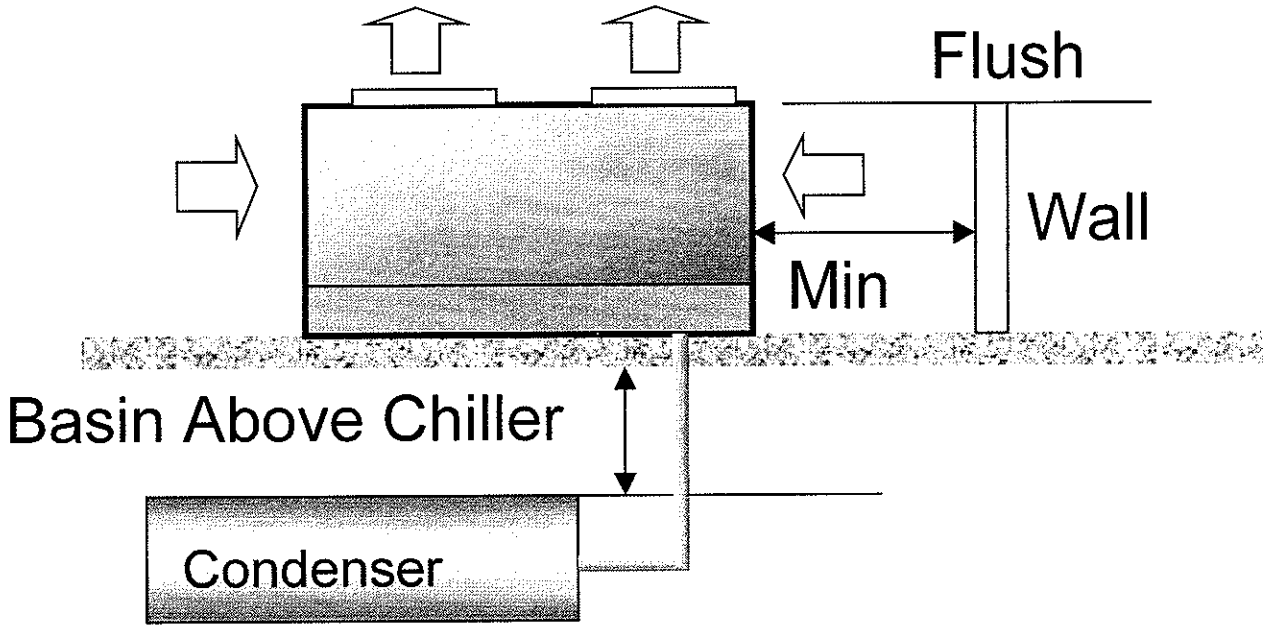

APPLICATION TIPS

- **Design water flow range:**
  - **One to five GPM**
- **Operating water flow range:**
  - **+5% to -25%**
- **Control capacity by varying air flow, not water flow**

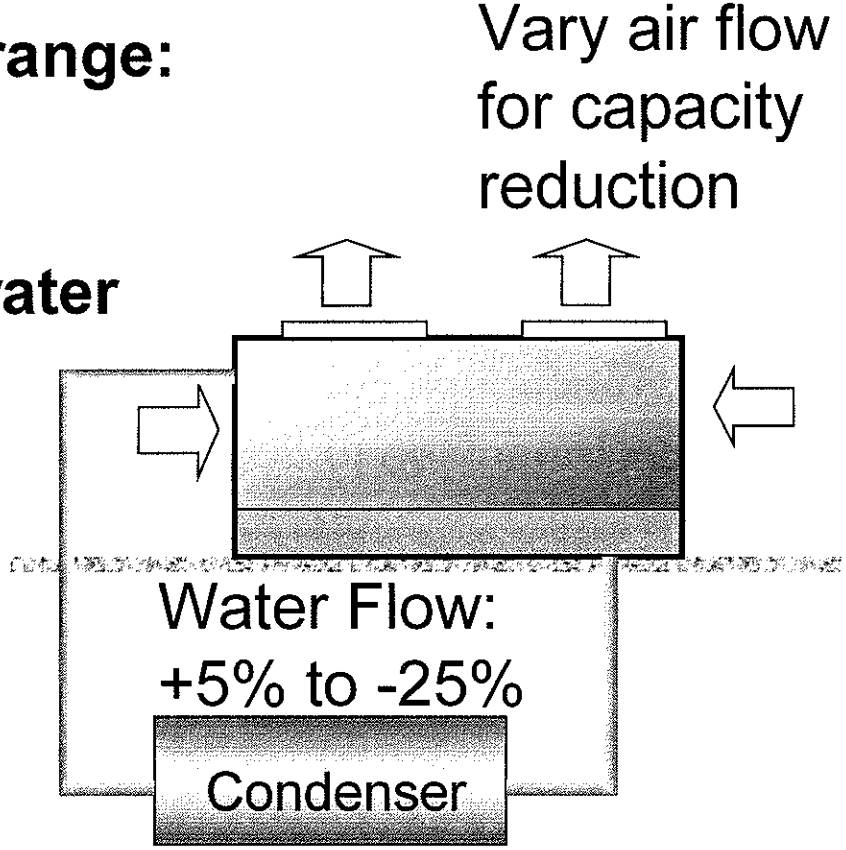

APPLICATION TIPS

- **Low ambient conditions:**
  - **Use modulating tower bypass <u>only</u> for chiller cold starts**
  - **Always use multi-speed fan or a variable seed fan**
  - **Tower performance drops off with cold water**
  - **Be careful at 32 F with free cooling applications**

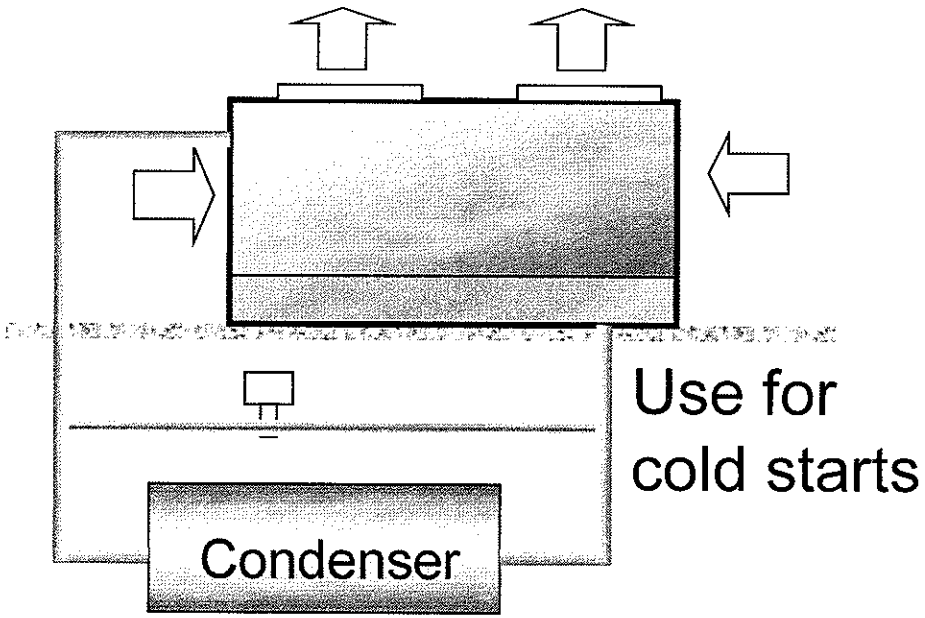

APPLICATION TIPS

- **Nominal 15,000 Btuh / evap. ton**
  - **85 to 95 F range**
  - **3.0 GPM / evap ton**
  - **3000 Btuh heat of compression**
    - **3000/3413 = 0.89 kw/ton**
- **Range = 9.2 F with 0.53 kw/ton chiller**
- **Don't get stuck at 85 F return temp**
  - **Drop it at part load**
  - **Chiller efficiency reduces by 1% to 3% per degree drop below 85 F**

15,000 Btuh
- Not always-

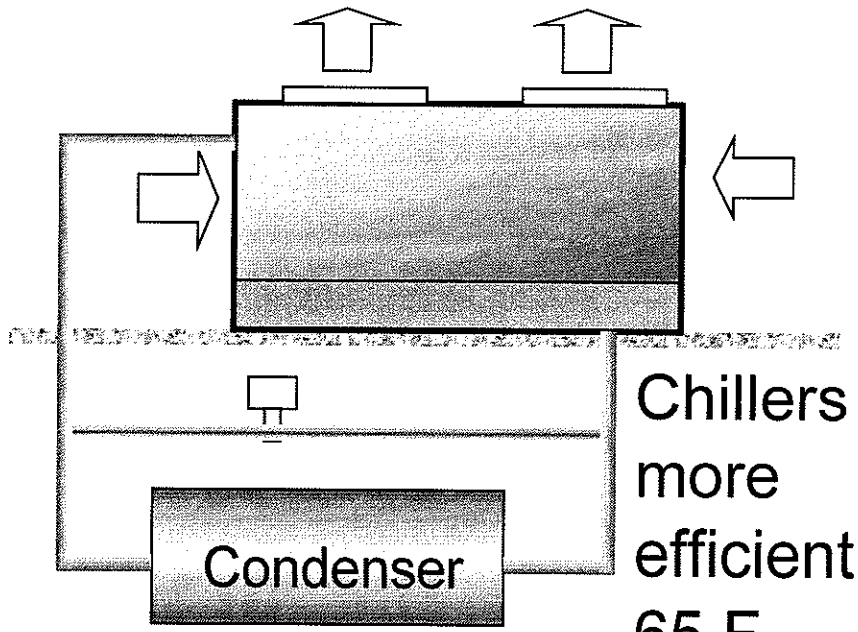

Chillers are more efficient at 65 F

TYPICAL TOWER SELECTION OUTPUT DATA

Project: Sample							Mar, 20,00
Location: Anywhere, USA							TRAINCOM
Product Line	Series NC						
Model	NC6221						
No. of Cells	1						
Motor	40 HP, 1800 RPM						
Motor Output	40 BHP						
Tower Flow rate	1515 GPM						
Hot water Temperature	95.04 F						
Cold water Temperature	85.04 F						
Wet-Bulb Temp	78.00 F						
Fan	10 ft dia., 9 blades						
Fan Speed	384 RPM, 12064 ft/min						
Air Flow	161,600 DFM Per Cell						
	161,600 CFM Total						
Weights:	Per Cell	Total					
Shipping	10,245	10,245					
Max. Operating	22,058	22,058					
Dimensions	Per Cell	Total					
Width	19.83	19.83					
Length	11.90	11.90					
Height	12.98	12.98					
Static Lift	12.23						
Minimum Clearance For Enclosure:							
Clearance required on air inlet sides of tower without altering performance.							
Assumes no air from below tower.							
Solid Wall	8.56 ft						
50% Open Wall	6.71 ft						
Collection Basin Heater Sizing:							
Minimum ambient temperature to maintain water at 40.00 F							
Heater Kw/cell	24.0	18.0	15.0	12.0	9.0	7.5	6.0
Ambient Temp - F	-25.81	-8.25	0.53	9.31	18.09	22.48	26.87



DESIGN PROJECT

- If your computer is equipped with a Tower Computer Selection Program:
- Try selecting a tower for your chiller plant
  - Assume 78 F design wet bulb for design
- Submit this for extra credit on the project

DESIGN PROJECT TITLE PAGE

HIGH-RISE HOTEL WITH CASINO

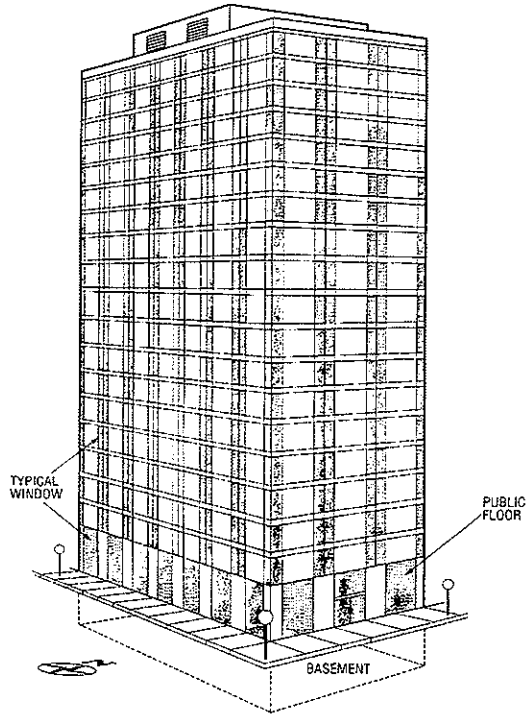

Date: _____

Team Number _____

Team Members:

_____

_____

_____

_____

_____

DES700

APPLIED WATER SYSTEM DESIGN

DESIGN PROJECT

During this week you are required to design a chilled water system for a 19 story Casino-Hotel complex. The pages that follow provide you with data, drawings, and schedules you will need for your project.

Your design team is required to assemble your completed work into a folder. The folder will be handed into your instructor for grading and will be returned to you by mail.

The material to be handed-in should be assembled in the order that follows. Use this list as a check list as you progress through the week.

Order Of Material For Hand-in:

01- Cover page
Fill in the team member names, team number, & date.
02- Copy of top floor plan (show hotel rooms).
Identify room numbers & use these numbers as tags when identifying Fan Coil selections.
03- Copy of intermediate floor plan (show hotel rooms)
Identify room numbers & use these numbers as tags when identifying fan coil selections.
04- Title page introducing Room Fan Coil section
05- Completed Ventilation Method Form
06- Completed Fan Coil Control Schedule Form
07- Copy of Hotel Room Load Summary Sheet
08- Completed Room Fan Coil Selection Schedule Form
09- Copy of Fan Coil selection for each unique room load.
10- Title page identifying Casino Air Handler section
11- Copy of Casino Load Estimate and limits for AHU
12- Print-outs from the 39T Computer Selection Program:
a) Cool Coil Selection Input Summary
b) Cool Coil Selection Performance Summary
c) Heat Coil Selection Input Summary
d) Heat Coil Selection Performance Summary
e) Fan Selection Input Summary
f) Fan Selection Performance Summary
13- Completed copy of the Air Handling Unit Control Valve Schedule Form.
14- Title page identifying the Piping Layout Section
15- Typical hotel room layout showing your 42S locations
16- Hotel floor plan drawing showing:
a) All Fan Coil Risers
b) Ventilation AHU
c) The (2) Casino AHUs
d) The Chiller Plant (not individual chillers)
17- Completed Riser GPM Needs Schedule
18- Completed Vertical Riser GPMs Form for the Fan Coil Riser supplying the Ventilation Unit
19- Vertical Sketch(East & West) of vertical risers with supply and return headers shown
a) Leave stub-outs on supply and return headers where they would connect to the chiller plant.
b) Show GPMs leaving the supply header and entering the return header
20- Completed total Chiller Plant GPM form

DESIGN PROJECT

21- Title page identifying The Pipe Sizing section

Computer printed outputs showing the piping loss for:

a) Typical fan coil unit loss

b) Typical stack riser loss (assume all are same except for the riser supplying the stack unit)

* Provide rough estimate for this stack loss.

C) Supply and return header loss

22- Title page identifying The Chiller Plant

23- Completed Chiller Plant Schedule form

24- Complete the Chiller Program Input form

25- Printout from the 30 Series Chiller Selection Program:

a) Chiller "Tag" Input Form

B) Chiller "Tag" Performance Summary

C) Chiller NPLV Part Load Performance

26- Completed Pump Selection Form for the Chilled Water System

27- Copy of selected pump curve with system curve plotted on it

THE CASINO BUILDING

- **Building details**
  - Location: St. Louis, MO
  - 19 story building
  - Casino/Restaurant - 1st floor
  - Hotel - top 18 floors
  - Equipment penthouse on roof
  - (24 x 18) = 432 hotel rooms
  - Hotel room floor to floor height is 10 feet
  - Casino floor to floor height is 14 feet
  - Basement floor to floor height is 20 feet
  - 24 hour building operation

HIGH-RISE HOTEL WITH CASINO

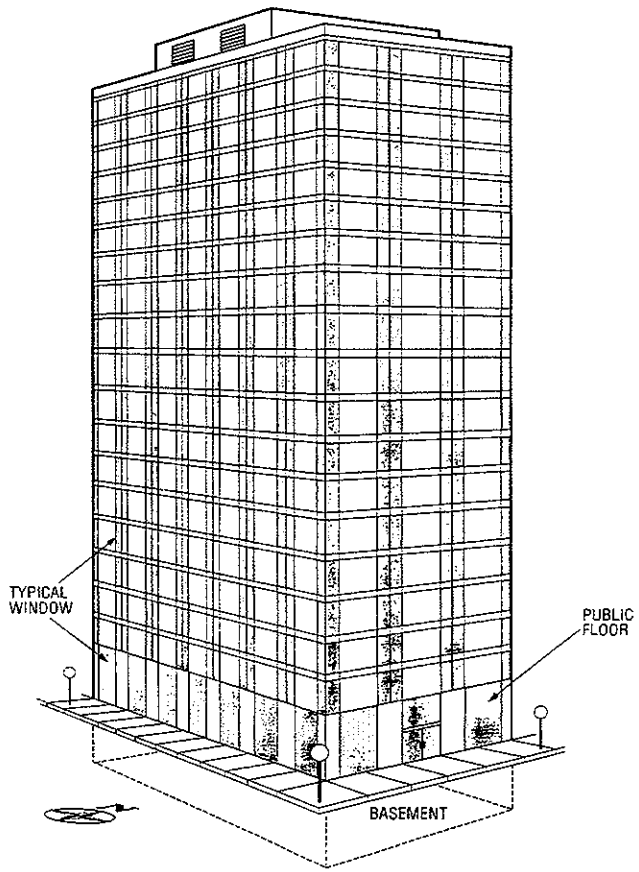

DESIGN CHECKLIST

DESIGN STEP	DESIGN REMINDERS
1.Select module or room	Based on exposure, partition depth and column spacing
2. Outdoor peak design	Typical time – 40°N N module – 3:00 PM july E module – 9:00 AM july S module – 2:00 PM sept-oct W module – 5:00 PM july Building block – 4:00 PM aug
3.Calculate cooling loads	a. Peak for each module or room b. Peak black load for building and terminal fan ht gain
4.Calculate heating loads	a. For module or room b. For building – include tempering loads of outdoor air
5.Select terminals	a. Select type of Room Fan Coil Unit b. Select for ERSH c. Select for sound levels required d. Select for external static pressure required e. Provide floor level return for heating
6. Ventilation	a. Decide on method of room ventilation b. Locate & select Ventilation Air Handler (if it is chosen method) c. Layout & size any required Ventilation Duct System

DESIGN CHECKLIST

DESIGN STEP	DESIGN REMINDERS
7. Terminal control	a. Standard factory package most economical b. Water flow control advantageous for temperature control 1. Both wall and unit thermostats available 2. Fan must operate whenever chilled water is circulating 3. Two way valve-pump requires pressure regulating controls 4. Reset hot water temperature compensator c. Fan cycling control 1. Less desirable than water flow control 2. Use wall mounted thermostat 3. Provides best room humidity control (automatic cycling)
8. Make piping layout	a. Locate equipment in the building b. Install shutoff valves at unit supply and return connection c. Install necessary vents and expansion tanks d. Size in a conventional manner e. Apply diversity to chilled water piping of the 4 pipe system f. Do not use diversity on any piping system used for heating duty
9. Lay out condensate drain	a. Run-out size to correspond to drain pan connection b. System to be gravity flow and sized from charts for open piping
10. Select refrigeration machine	a. Fan coils require chilled water plant b. Reciprocating, Screw, Centrifugal or Absorption units are available c. Control Chiller leaving chilled water at desired terminal supply water temperature
11. Select auxiliary equipment	Pumps, valves, cooling towers, heating plant, associated piping

HOTEL FLOOR PLAN - WEST

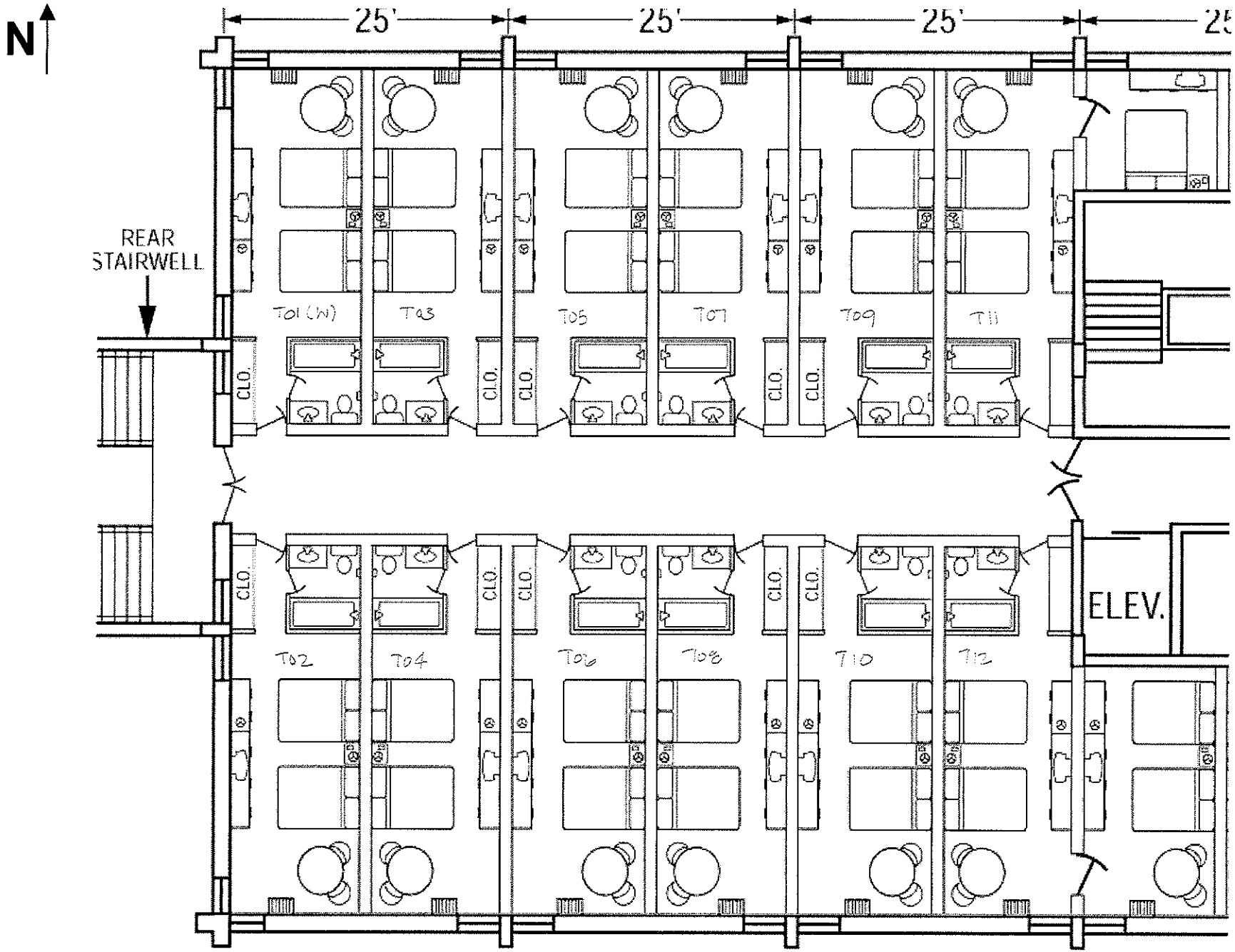



HOTEL FLOOR PLAN - EAST

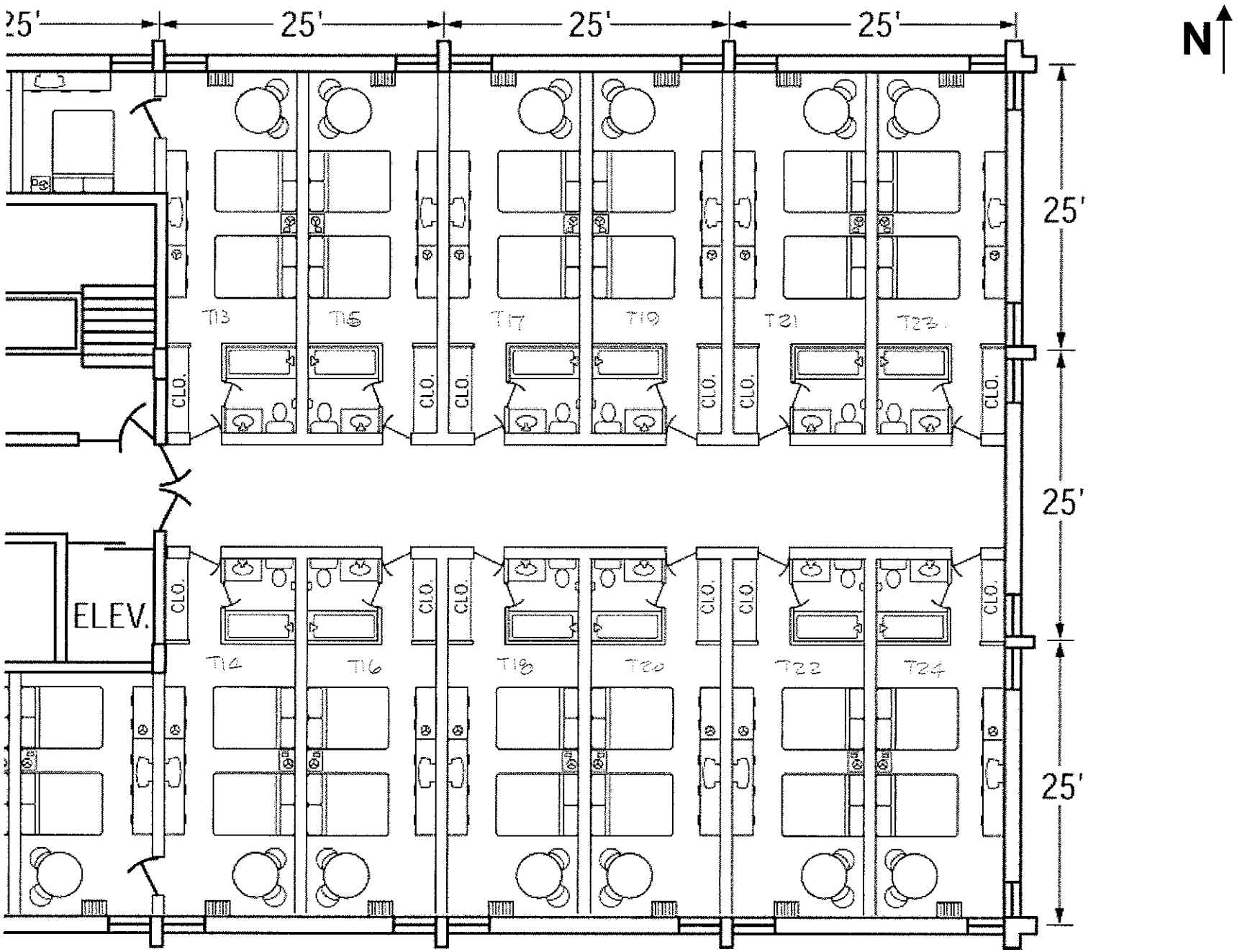



TYPICAL 2 BEDROOMS

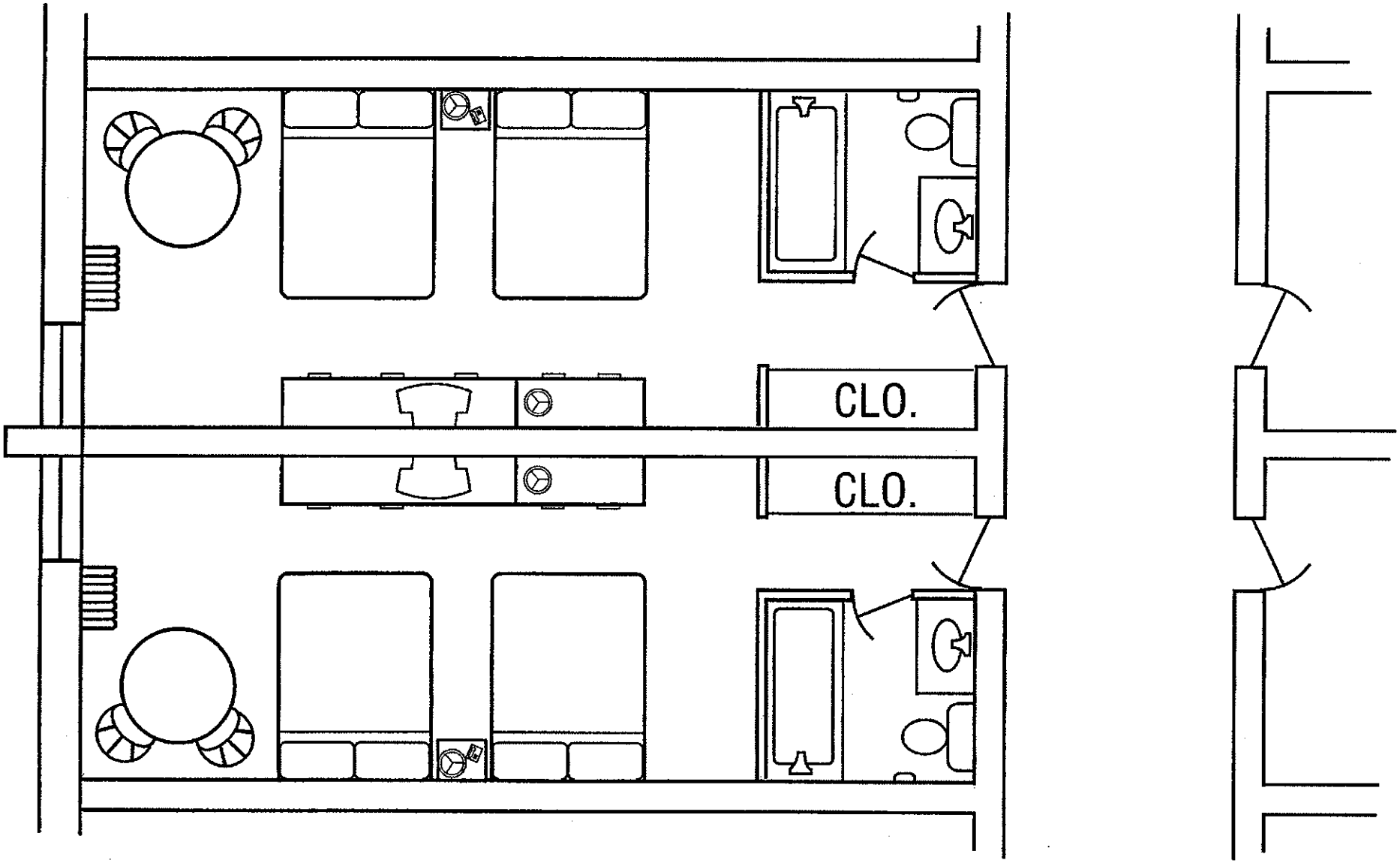



TYPICAL 2 BEDROOMS

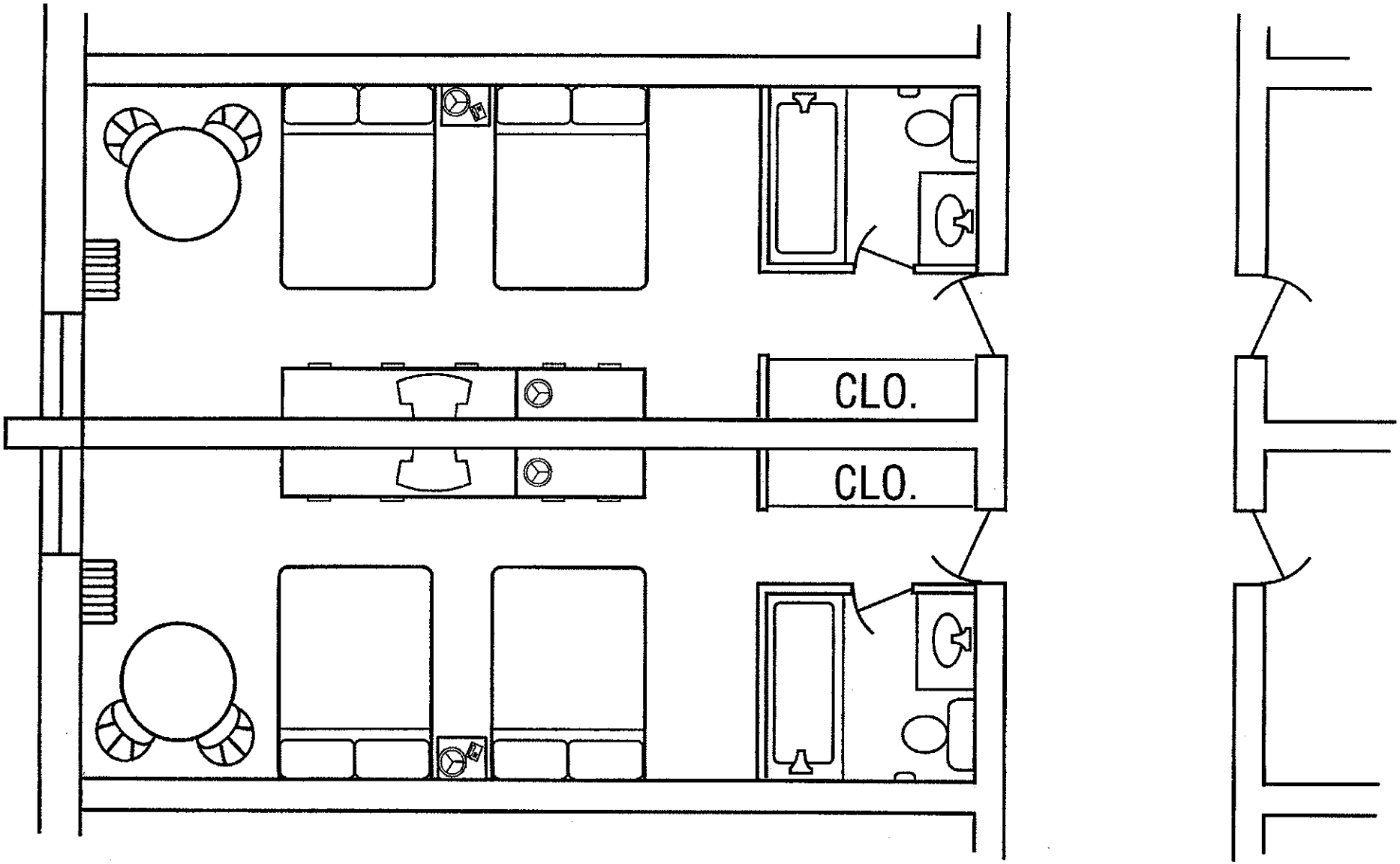



BLANK HOTEL FLOOR PLAN - WEST

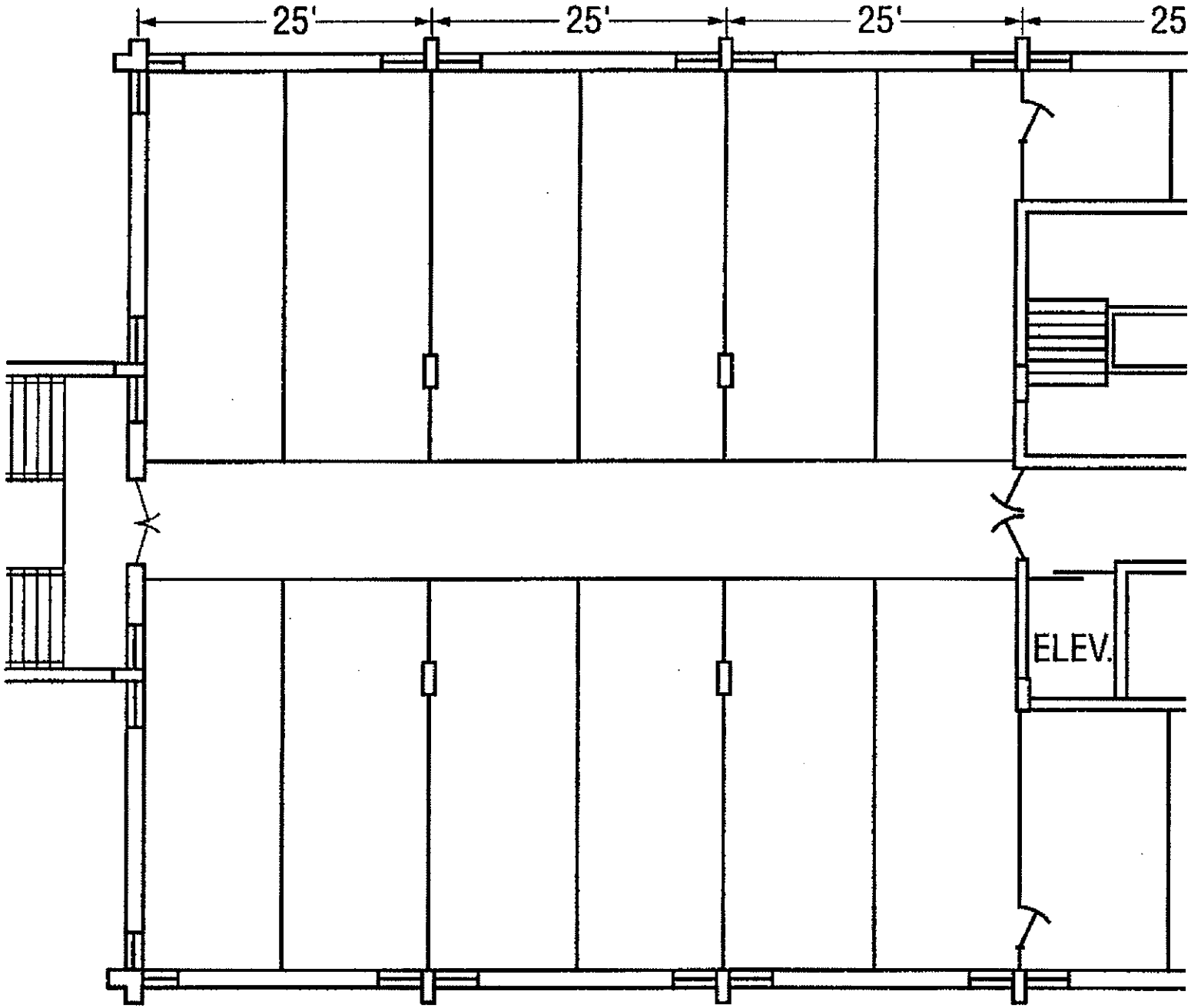



BLANK HOTEL FLOOR PLAN - EAST

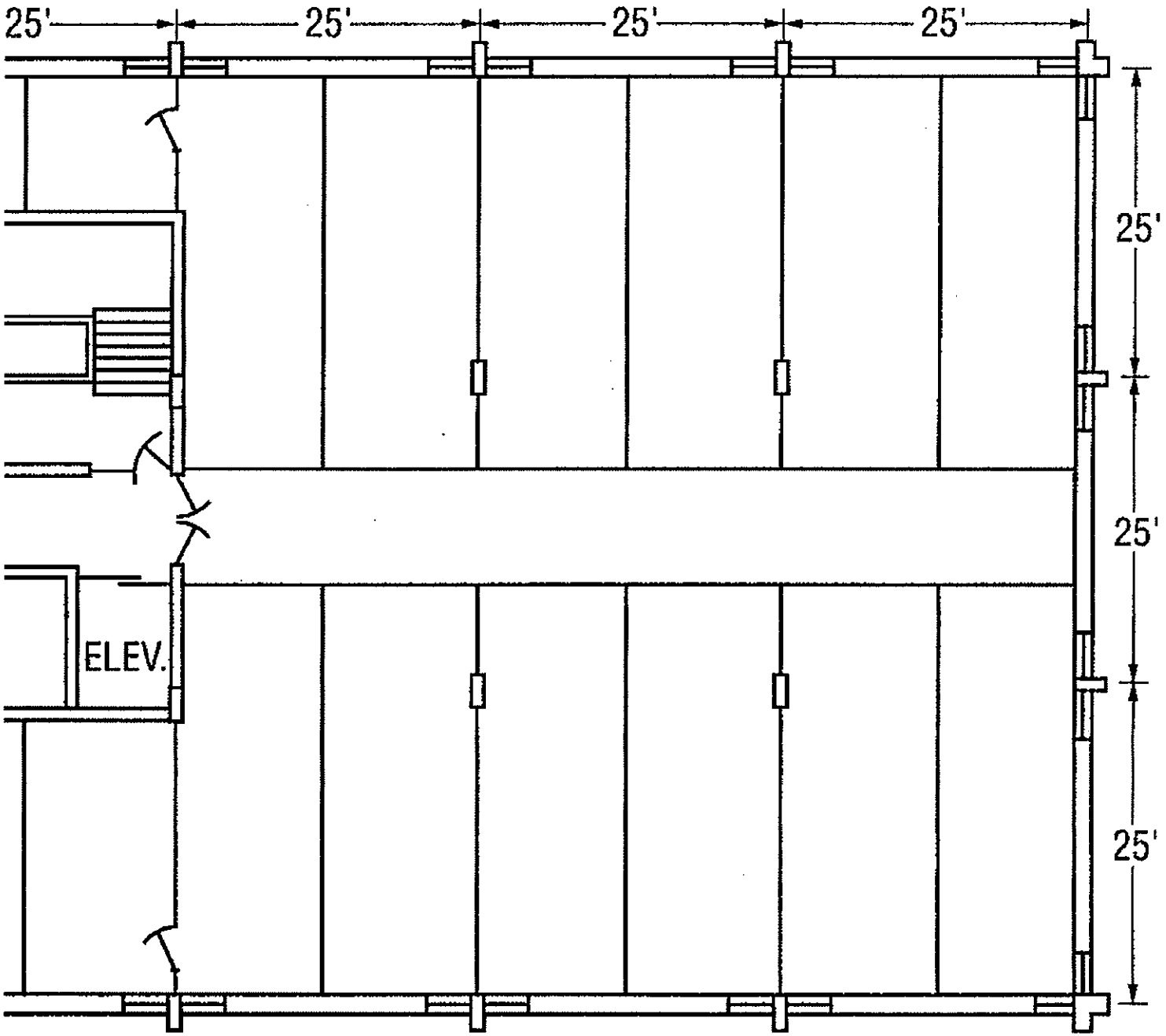



BLANK HOTEL FLOOR PLAN

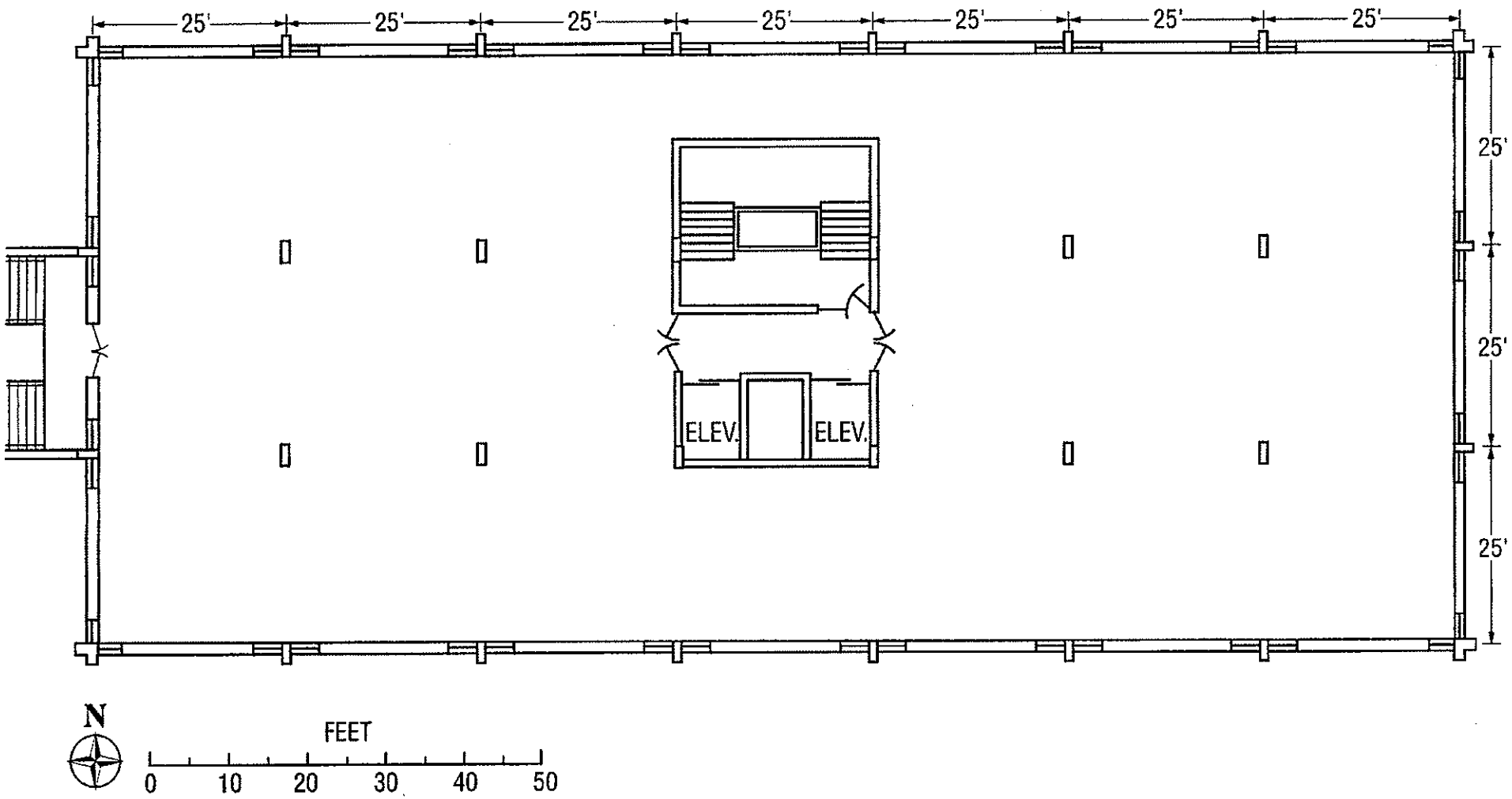



CASINO GROUND FLOOR

HIGH-RISE HOTEL

CASINO GROUND FLOOR

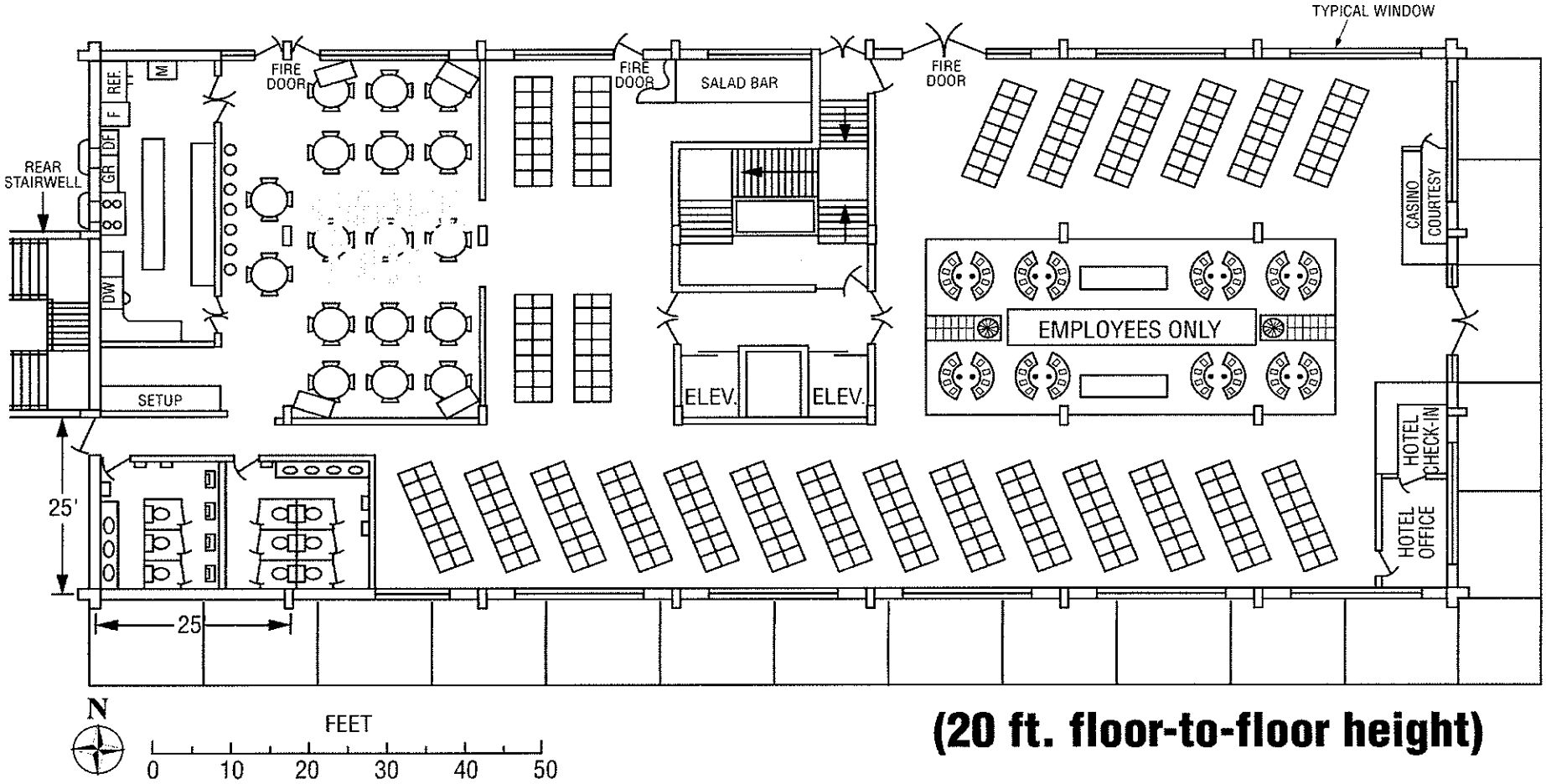

(20 ft. floor-to-floor height)



VENTILATION SCHEDULE FORM

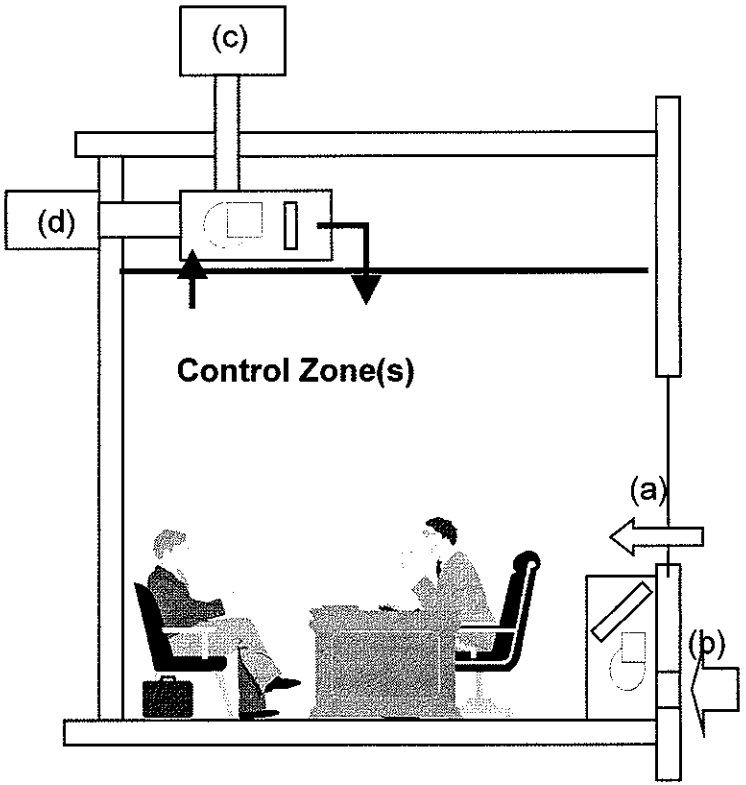

1- Infiltration
2- Outside Air Damper in Terminal Unit
3- Extension of Interior System
4- Separate Ventilation System

Ventilation System chosen for the Hotel equipped with 42S Stack Units:

Justify in the space below how you arrived at your final choice from among the 4 possible ventilation methods:



CASINO BUILDING LOAD SUMMARY

ZONE	PEAK TIME	OUTDOOR DESIGN DB / WB	NUMBER PEOPLE	PEAK RSH	PEOPLE LATENT LOAD	SPACE HEAT LOAD	VENTILATION			
							CFM (std)	Cool Sen+Lat	Cool Sen	HEAT TO ROOM
N Top 2-Bed	Jul 4PM	96.4/74.8	2	6,360	320	5,066	80	3,261	1,936	6,160
N Top Small 1-Bed	Jul 4PM	96.4/74.8	1	5,500	160	5,000	40	1,630	968	3,080
S Top 2-Bed	Aug 4PM	96.4/74.8	2	6,640	320	5,066	80	3,261	1,936	6,160
S Top Small 2-Bed	Aug 4PM	96.4/74.8	2	6,200	320	5,000	80	3,261	1,936	6,160
NW Top 2-Bed	Jul 5PM	94.9/74.4	2	9,829	320	9,876	80	3,261	1,936	6,160
NE Top 2-Bed	Jul3 PM	97.0/75.0	2	10,082	320	11,157	80	3,261	1,936	6,160
SE Top 2-Bed	Jul 3PM	97.0/75.0	2	10,329	320	11,157	80	3,261	1,936	6,160
SW Top 2-Bed	Jul 5PM	94.9/74.4	2	10,074	320	9,876	80	3,261	1,936	6,160
Hall Top	Jul 5PM	94.9/74.4	9	28,961	2,363	15,590	90	3,668	2,178	6,930
Hall Entry Top	Jul 7PM	89.9/73.1	1	5,393	338	3,600	0	0	0	0
N Int 2-Bed	Jul 3PM	97.0/75.0	2	4,896	320	2,266	80	3,261	1,936	6,160
N Int Small 1-Bed	Jul 3PM	97.0/75.0	1	4,300	160	2,200	40	1,630	968	3,080
S Int 2-Bed	Aug 3PM	97.0/75.0	2	3,392	320	2,266	80	3,261	1,936	6,160
S Int Small 2-Bed	Aug 3PM	97.0/75.0	4	3,300	570	2,200	80	3,261	1,936	6,160
NW Int 2-Bed	Jul 5PM	94.9/74.4	2	6,468	320	7,076	80	3,261	1,936	6,160
NE Int 2-Bed	Jul 3PM	97.0/75.0	2	6,665	320	8,357	80	3,261	1,936	6,160
SE Int 2-Bed	Aug 3PM	97.0/75.0	2	6,920	320	8,357	80	3,261	1,936	6,160
SW Int 2-Bed	Aug 5PM	94.9/74.4	2	6,776	320	7,076	80	3,261	1,936	6,160
Hall Int	Jul 3PM	97.0/75.0	9	15,546	2,363	3,340	90	3,668	2,178	6,930
Hall Entry Int	Jul 3PM	97.0/75.0	1	3,691	338	1,850	0	0	0	0
18 Floors (Hotel)	Aug 3PM	97.0/75.0	972	2,164,719	155,520	1,777,421	45,180	1,841,537	1,093,356	3,478,860
Top Floor Hotel	Jul 4PM	96.4/74.8	54	163,631	8,640	180,790	2,250	91,710	54,450	173,250
Int Floor Hotel	Aug 3PM	97.0/75.0	54	118,018	8,640	93,731	2,250	91,710	54,450	173,250
Casino(Floor 1)**	Aug 3PM	97.0/75.0	540	864,685	146,500	382,939	15,020	612,215	363,484	1,156,540

** Exhaust = 2400 cfm

Casino Coil Selection Parameters:		Heating
1. Standard CFM =	40,032	
2. Actual CFM =	40,815	
3. Entering DB / WB (F)	84.8/68.6	60 DB
4. Leaving DB / WB (F)	55.0/54.3	
5. Total Coil Load (Btuh)	1,778,332	
6. Sensible Coil Load (Btuh)	1,290,348	1,539,479
7. Apparatus Dewpoint (F)	53.4	
8. Bypass Factor	0.05	

St. Louis Design Conditions:	
Latitude =	38 deg
Elevation =	535 ft
Summer DB (F)	97.0
Coincident WB (F)	75.0
Grains/Lb	95.0
Daily Range (F)	21.0
Winter DB (F)	2.0
Atmospheric Clear. NO.	0.95

Thermostat Setpoints		Room Occ
Cool (occ)	75.0	71GR
Cool WB	63.8	53.8%RH
Cool (Unoc	85.0	57.6DP
Heat	72.0	

Ent Chilled Water	45 F
Ent Hot water	120 F

Typical Input to Fan Coil Program

	42 SERIES ROOM FAN COIL SELECTION PROGRAM INPUT DATA								
	Input Information	**Units**							
1	**Zone Tag Name**								
2	42 Product Type	1 thru 6							
3	**Coil Application**	1 thru 3							
4	Fluid Concentration	%							
5	System Altitude	feet							
6	System Heating Rows	1 thru 3							
7	Motor Voltage	1 thru 5							
8	Cooling Selection Method	1 thru 4							
9	Fan Motor Speed	H, M, L							
10	External Static pressure	In W.G.							
11	Required Capacity	Btuh							
12	Entering Air Dry Bulb	F							
13	Entering Air Wet Bulb	F							
14	Entering Fluid Temperature	F							
15	Fluid Flow Rate (maximum)	GPM							
16	Fluid Temperature Rise	F							
	Heating Performance								
17	Solve For Total Heating Laod	Btuh							
18	or Fluid Flow rate	GPM							
19	Entering Air Dry Bulb	F							
20	Entering Fluid Temperature	F							
21	Fluid Flow Rate	GPM							

42 Product Type
1. 42C Horizontal
2. 42V Vertical
3. 42V Lowboy
4. 42D Ducted
5. 42S Stack
6. 42B Belt Drive

Coil Application
1. Fresh Water (default)
2. Ethylene Glycol
3. Direct Expansion

System Heating Rows
1. 2 Pipe Cooling/Heating
2. 4 pipe, 1 Row Heating
3. 4 pipe, 2 Row Heating

Motor Voltage
1. 115, 1 Phase, 60 Hz
2. 208, 1 Phase, 60 Hz
3. 230, 1 Phase, 60 Hz
4. 277, 1 Phase, 60 Hz
5. 220, 1 Phase, 50 Hz

Cooling Selection Method
1. Total Cooling
2. Sensible Cooling
3. Fluid Flow rate (Maximum)
4. Fluid Temperature Rise

Sample Solution & Schedule For NW-TOP Room

TYPICAL FAN COIL COMPUTER OUTPUT

Prepared by ..... TRAINCOM
Tag Name ..... 1901NW TOP

Date: '03-16-00
61015982

SYSTEM DATA

Product ..... 42S STACKED
Model ..... 42SJ - BACK-TO-BACK FURRED
Size 06
System ..... 2 Pipe
Altritude ..... 0 Ft
Type ..... Fresh Water

Air Flow Rate..... 450 CFM
External Static ..... 0.05 In
Fan Motor data: ..... Medium Speed
277V, 1Ph, 60Hz
1/10 hp, 0.05 amps, 100 watta

COOLING DATA

Total Capacity	14.7	MBH	Entering Air DB	75.0	deg F
Sensible Capacity ...	9.8	MBH	Enterinmg Air WB ...	63.8	deg F
Fluid Flow Rate	2.7	GPM	Leaving Air DB	54.8	deg F
Entering Fluid Temp.	45.0	deg F	Leaving Air WB	52.4	deg F
Leaving Fluid Temp.	55.7	deg F			
Fluid Temp Rise	10.7	deg F	Cooling Rows	3.0	
Fluid pressure Drop.	8.1	ft wg	Method of Balance ..	Sensible Cooling	

HEATING DATA

Heating capacity	16.1	MBH	Entering Air DB	72.0	deg F
Fluid Flow Rate	1.8	GPM	Enterinmg Air WB ...	105.1	deg F
Entering Fluid Temp.	120.0	deg F	Heating Rows	3.0	
Fluid pressure Drop.	2.5	ft wg	Method of Balance ..	Heating Load	

ROOM FAN COIL SCHEDULE

NAME: Marvin Patnode	NOTE: 45 F CHILLED WATER	**DATE: Mar 16, 2000**
DESIGN TEAM NUMBER:	120 F HOT WATER	**JOB NAME: Casino Hotel Example (NW Top Room)**

TAG NAME	UNIT MODEL	NO. OF UNITS	UNIT SIZE-ROWS	COOLING				HEATING					FAN SPEED	FAN MOTOR VOLTAGE
				CAPACITY				COIL		CAPACITY				
				TOT BTUH	SEN BTUH	GPM	P.D.	TYPE	ROWS	BTUH	GPM	P.D.		
1901NW TOP	42SJ	1	06-3	14700	9800	2.7	8.1	HW	3	16100	1.8	2.5	Med	277/1/60



Room Fan Coil Selection Schedule

ROOM FAN COIL SCHEDULE															
NAME:								DATE:							
DESIGN TEAM NUMBER:								JOB NAME:							
TAG NAME	UNIT MODEL	NO. OF UNITS	UNIT SIZE-ROWS	COOLING				HEATING						FAN SPEED	FAN MOTOR VOLTAGE
				CAPACITY		GPM	P.D.	COIL		CAPACITY BTUH	GPM	P.D.			
				TOT BTUH	SEN BTUH			TYPE	ROWS						
TOI								NA	NA						



CASINO AHU LOAD ESTIMATE & LIMITS

- **The following load data has been provided in the Design Project section at the end of this book:**
- **Adhere to the following limits in selecting the two Casino Air Handlers:**
  - **Maximum face velocity for cooling 550 FPM**
  - **Maximum water pressure drop (cooling) 15 ft wg**
  - **Maximum water pressure drop (heating) 15 ft wg**
  - **AHU accessories:**
    - **Require a forward curved fan - horizontal**
    - **Standard mixing box**
    - **(1) flat filter 2 inch throwaway**
    - **(1) bag filter 90-95% efficient**

Casino Coil Selection Parameters:		Heating
1. Standard CFM =	40,032	
2. Actual CFM =	40,815	
3. Entering DB / WB (F)	84.8/68.6	60 DB
4. Leaving DB / WB (F)	55.0/54.3	
5. Total Coil Load (Btuh)	1,778,332	
6. Sensible Coil Load (Btuh)	1,290,348	1,539,479
7. Apparatus Dewpoint (F)	53.4	
8. Bypass Factor	0.05	

St. Louis Design Conditions:	
Latitude =	38 deg
Elevation =	535 ft
Summer DB (F)	97.0
Coincident WB (F)	75.0
Grains/Lb	95.0
Daily Range (F)	21.0
Winter DB (F)	2.0
Atmospheric Clear. NO.	0.95

Thermostat Setpoints		Room Occ
Cool (occ)	75.0	71GR
Cool WB	63.8	53.8%RH
Cool (Unoc	85.0	57.6DP
Heat	72.0	

Ent Chilled Water	45 F
Ent Hot water	120 F

CASINO AHU SELECTION

- Locate your Design Project material in the back of this book
- Gather into your Design Teams
- Select an AHU for 1/2 the Casino loads.
  Casino will have two equal sized Air Handlers
- Provide the following print-outs for your project:
  - Cool Coil Selection Input Summary
  - Cool Coil Performance Summary
  - Heat Coil Selection Input Summary
  - Heat Coil Performance Summary
  - Fan Selection Input Summary
  - Fan Performance Summary



FAN COIL CONTROL OPTIONS

PIPING SYSTEM	CONTROL SYSTEM	DESCRIPTION	THERMOSTAT ORDER CODE	SUPPLY AQUASTAT SENSOR	VALVE	UNIT FAN SWITCH	NOTES
2-PIPE HEAT & COOL CHANGE-OVER	FAN Control Use wall mounted thermostat	Manualy Cycled.	None	None	None	3 - Speed Switch	Not recommended for high humidity
		Thermostat cycles fan on-off with manual switch setting. Manual selection of heat or cool.	**Special Order**	None	None	3 - Speed Switch in Thermostat	
		Thermostat cycles fan on-off with manual switch setting. Mode set automatically by changeover sensor	**Special Order**	Yes	None	3 - Speed Switch in Thermostat	
		Thermostat cycles Hi to Lo on Cooling and Lo to Off on Heating. Mode set automatically by changeover sensor.	**Special Order**	Yes	None	No	Best cycle control for high humidity applications
	Two position motorized electric valves	Thermostat cycles valve open or closed Manualy switch from heat to cool heat to cool	Wall (T-1) Unit (T-2) Heat/Cool Switch	None	Motorized 2-way or 3-way	3 - Speed Switch in Thermostat	Valve packages with bell ends for soldering to coil
		Thermostat cycles valve open or closed Automatic switch heat to cool	Wall (T-3) Unit (T-4) Heat/Cool Switch	Yes			Bypass bleed line neded for 2-way valves with auto-changeover
ELECTRIC HEATER	Two position electric valve with auxiliary heater (2-Pipe)	Thermostat cycles valve open or closed. 2 F after valve closes, thermostat activates electric heater. Mode set automatically by changeover sensor.	Wall (T-5) Unit (T-6) sequenced Heat/Cool Switch	Yes Two Required	Motorized 2-way or 3-way	3 - Speed Switch in Thermostat	Valve packages with bell ends for soldering to coil
		Thermostat cycles valve open or closed. Manual switch from heat to cool.	Wall T-7) Unit (T-8) Heat/Cool Switch	None None			Bypass bleed line neded for 2-way valves with auto-changeover

FAN COIL CONTROL OPTIONS

PIPING SYSTEM	CONTROL SYSTEM	DESCRIPTION	THERMOSTAT ORDER CODE	SUPPLY CHNG-OVR SENSOR	VALVE	FAN SWITCH	NOTES
4-PIPE	Two position electric valve. (2-Pipe) Cool and heat valves	Thermostat cycles valve open or closed. 2 F after valve closes, thermostat activates electric heater. Mode set automatically by thermostat.	Wall (T-9) Unit (T-10) sequenced Heat/Cool switch	None	Motorized 2-way or 3-way Two Valves required	3 - Speed Switch in Thermostat	Valve packages with bell ends for soldering to coil No bypass bleed line required with 4-pipe systems.
		Thermostat cycles valve open or closed. Manual switch from heat to cool.	Wall (T-11) Unit (T-12) subbase with manual Heat/Cool switch	None			

FAN COIL VALVE PACKAGES

(Valves are normally closed to coil)

- We will use four of the many factory valve packages for this class:

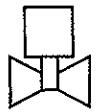
2-Way, 2 Position


Ball/ Balance

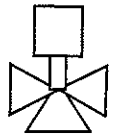
3-Way, 2 Position


Balance

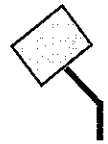
Air Vent



Aquastat

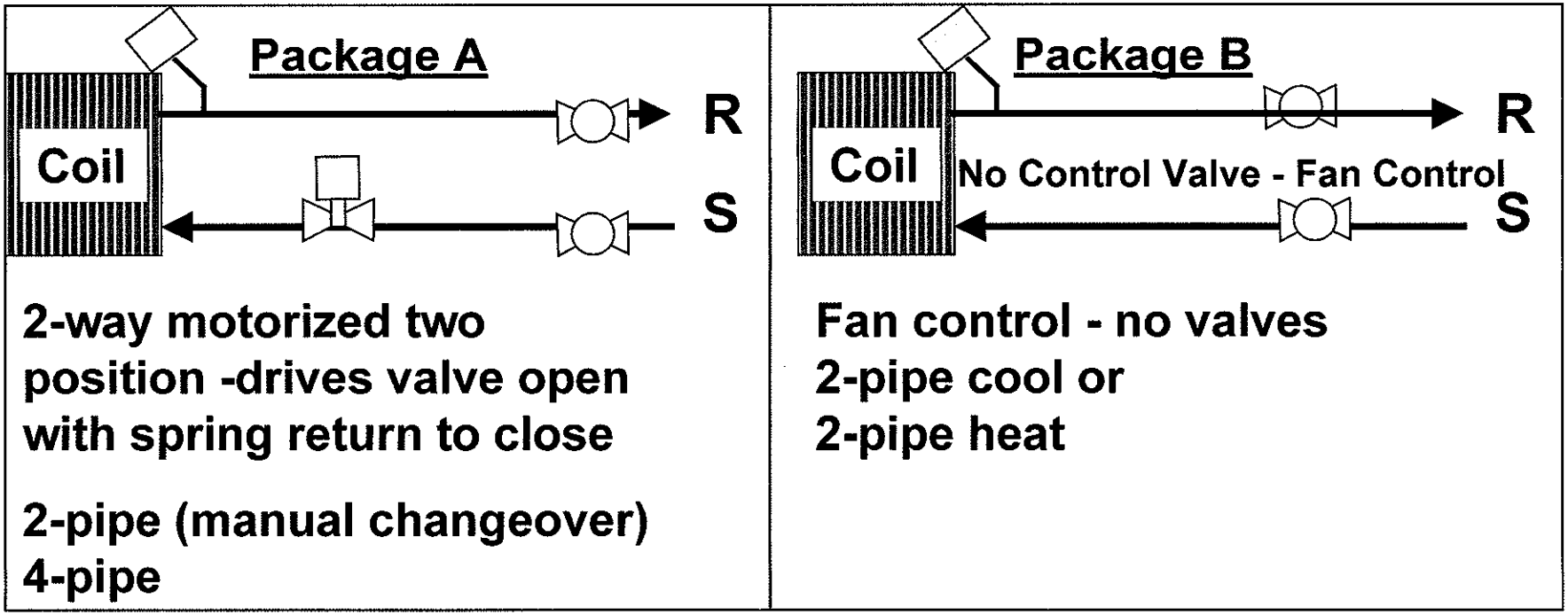

FAN COIL VALVE PACKAGES

(Valves Are Normally Closed to Coil)

- We will use four of the many factory valve packages for this class.

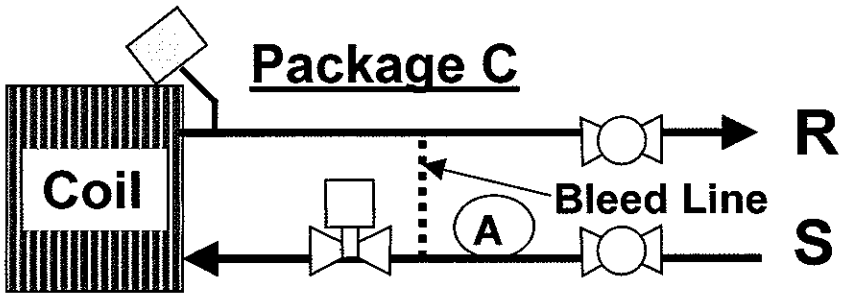

2-Way Motorized Two Position:
Motor drives valve open to coil, spring returns to closed

For 2-pipe Cool/Heat

Bleed line for Aquastat. Aquastat clips on supply line and prevents cooling with hot water & vice versa.

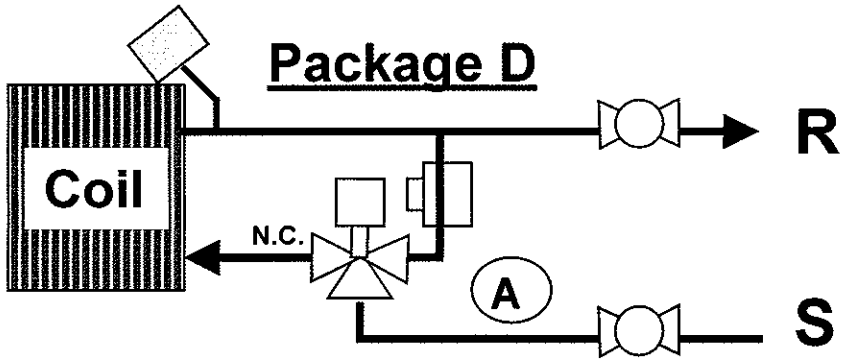

3-way motorized two position: motor drives valve open to coil, spring returns to closed

For 2-pipe or 4-pipe cool or heat

Aquastat clips on supply line and prevents cooling with hot water & vice versa for 2-pipe system

FAN COIL CONTROL SCHEDULE FORM		
PIPING SYSTEM TYPE:	**SELECTION**	**In the space provided, defend your choice in writing:**
CHOICES: 2-Pipe 2-Pipe With Aux. Electric Heat In The Terminal Units 4-Pipe		
THERMOSTAT PACKAGE:	**SELECTION**	**In the space provided, defend your choice in writing:**
CHOICES: T1 through T12		
CONTROL VALVE TYPE:	**SELECTION**	**In the space provided, defend your choice in writing:**
CHOICES: 2-Way Valves 3-Way Valves		
VALVE CONTROL PACKAGE:	**SELECTION**	**In the space provided, defend your choice in writing:**
CHOICES: Package A Package B Package C Package D		



AHU CONTROL VALVE SCHEDULE

Complete the following form for the Casino Air Handlers and submit with your project:

AIR HANDLING UNIT CONTROL SCHEDULE			
CONTROL VALVE TYPE:	**SELECTION**	**In the space provided, defend your choice in writing:**	
CHOICES: 2-Way Modulating Valve 3-Way Mixing Valve			
AHU VALVE REQUIREMENTS	**VALUE**	**UNITS**	**NOTES**
Coil Flow Rate Coil pressure Drop Required Valve C_V		GPM ft wg	
CONTROL VALVE SELECTED	**VALUE**	**NOTES**	
Size From Table (I.e. 1/2-A) Selected Valve C_V			
CONTROL VALVE PRESSURE DROP	**VALUE**	**NOTES**	
Pressure drop = {[(GPM)2 / (CV)2] x 2.31}			

PROJECT: LOCATE THE UNITS

Use the Hotel room drawing on the next page:

Choose between the four 42S layout types and sketch where your team decided to locate them.

Why this location & type?

PROJECT: HOTEL ROOM LAYOUT

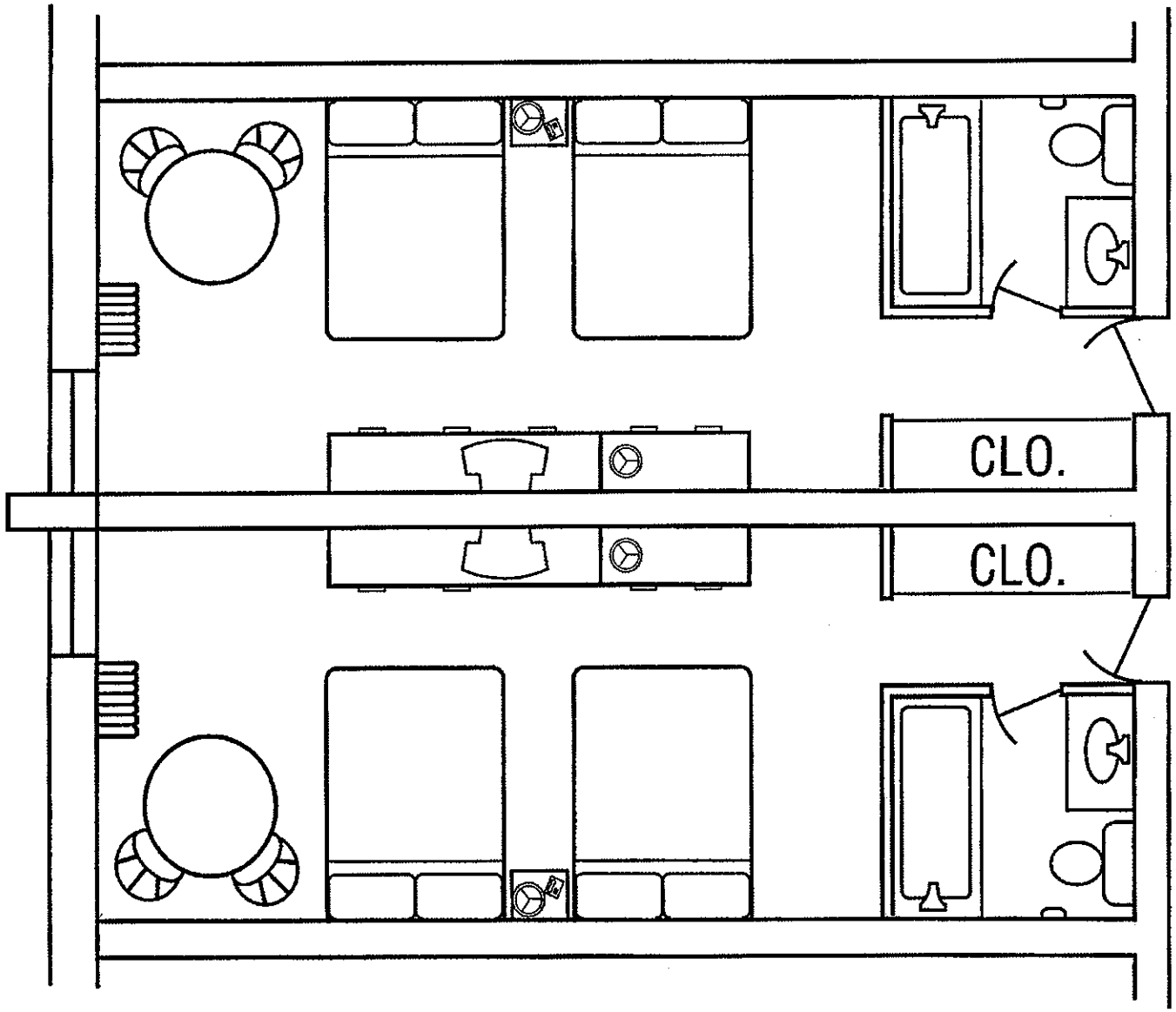

Choose between the four 42S layouts and sketch where your team decided to locate them.

Why this location & type?

PROJECT:
Locate: Risers, Vent Unit, AHUs, Chiller Plant, Supply & Return Headers

Locate all the risers needed to supply the Fan Coil Terminals in this building.

Number the risers on your drawing (1, 2, etc..)

The Ventilation Air Handler will be located In the penthouse mechanical room on the roof.

Locate the Ventilation AHU on the same drawing as your risers.

Select one of the risers to carry the Ventilation AHU GPM to the penthouse.

Locate the (2) Casino Air Handlers on this sketch.

The Chiller Plant will be located In the basement mechanical room.

We will decide on how many Chillers later in the course.

Locate the Chiller Plant (a box) on the same drawing as your risers.

On the sketch at the right, show how chilled water is supplied from the Chiller Plant to the Casino Air Handlers and to all the Stack Unit Risers.

Show GPM values for the supply and return headers as the pipes go around the building.

BLANK HOTEL FLOOR PLAN - WEST

Locate:
All Fan Coil Risers
Ventilation AHU
(2) Casino AHU's
Chiller Plant

Vertical Riser

Vertical Drop

F Fan Coil Unit

C Chiller

Supply Pipe

Return Pipe

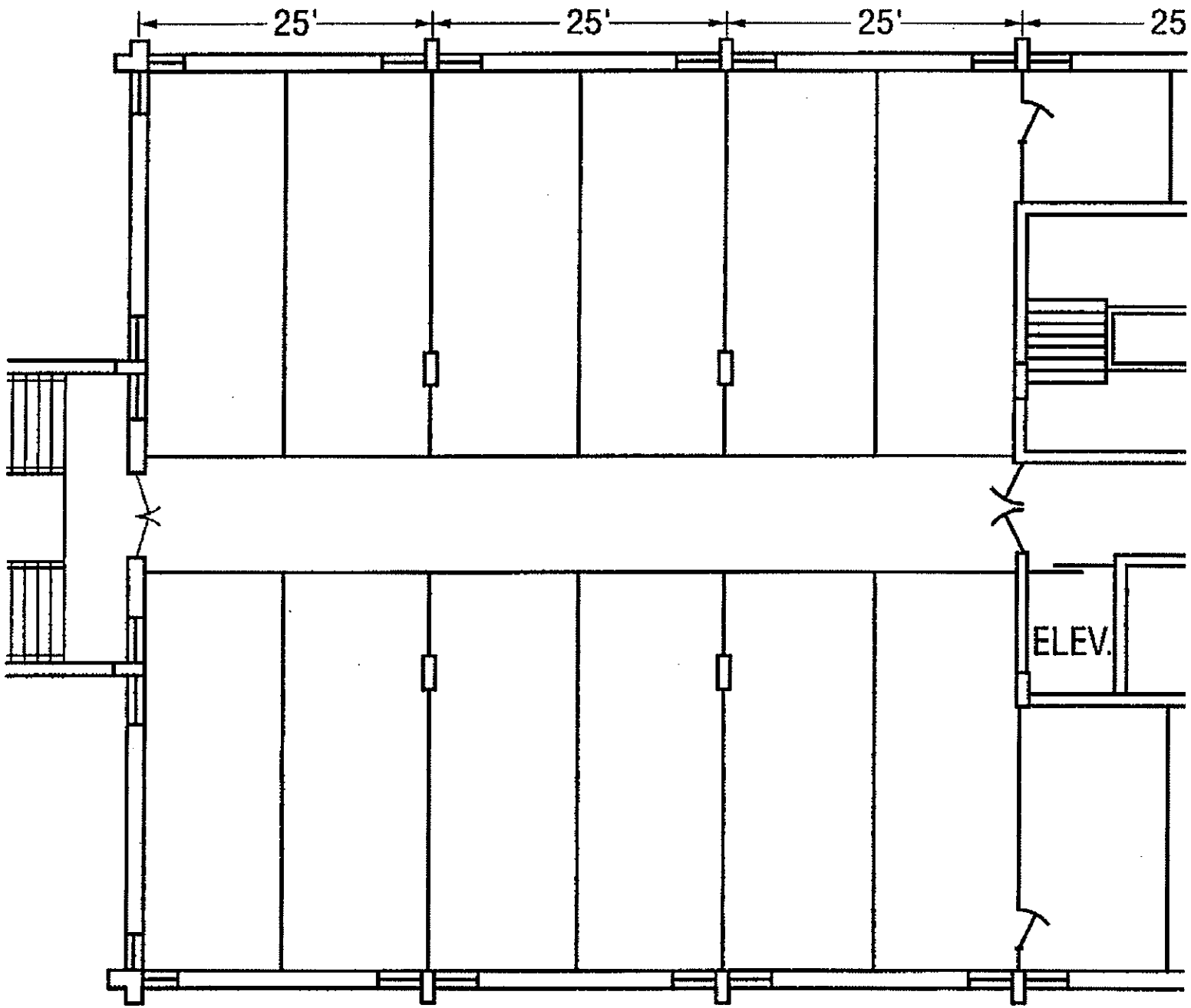



BLANK HOTEL FLOOR PLAN - EAST

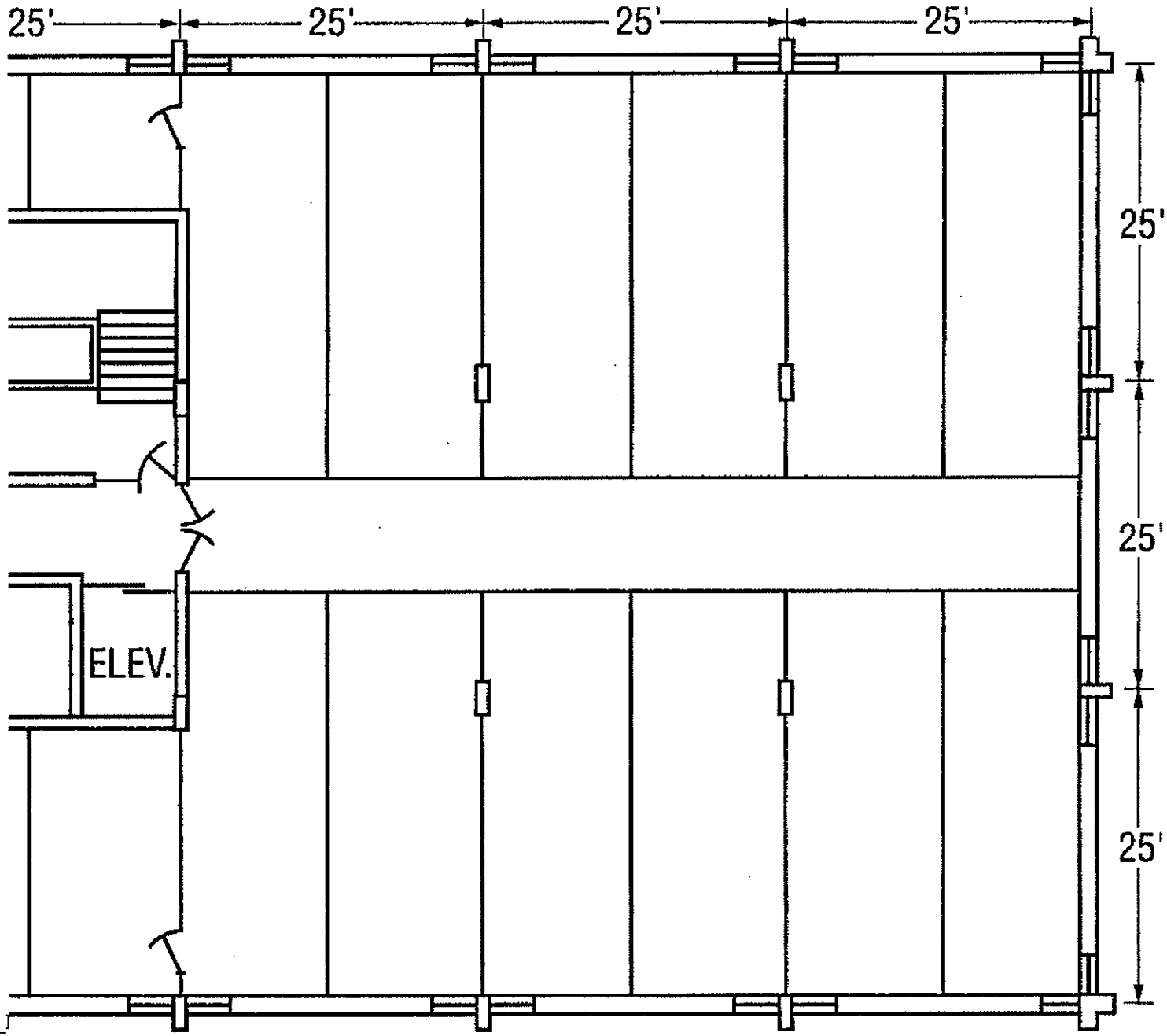

Locate:
All Fan Coil Risers
Ventilation AHU
(2) Casino AHU's
Chiller Plant

Vertical Riser

Vertical Drop

F Fan Coil Unit

C Chiller

Supply Pipe

Return Pipe



BLANK HOTEL FLOOR PLAN - WEST

Locate:
All Fan Coil Risers
Ventilation AHU
(2) Casino AHU's
Chiller Plant

Vertical Riser

Vertical Drop

F Fan Coil Unit

C Chiller

Supply Pipe

Return Pipe

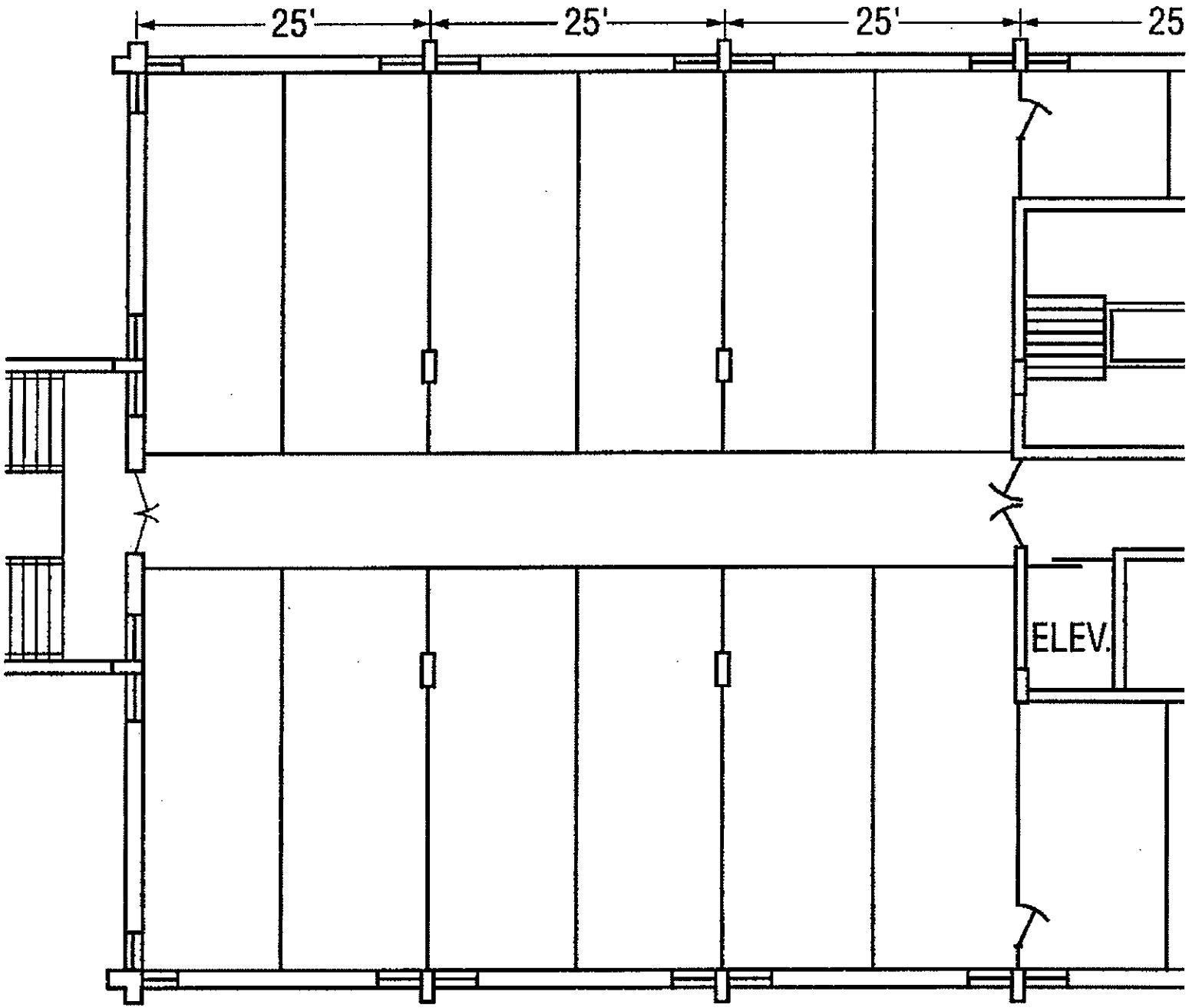



BLANK HOTEL FLOOR PLAN - EAST

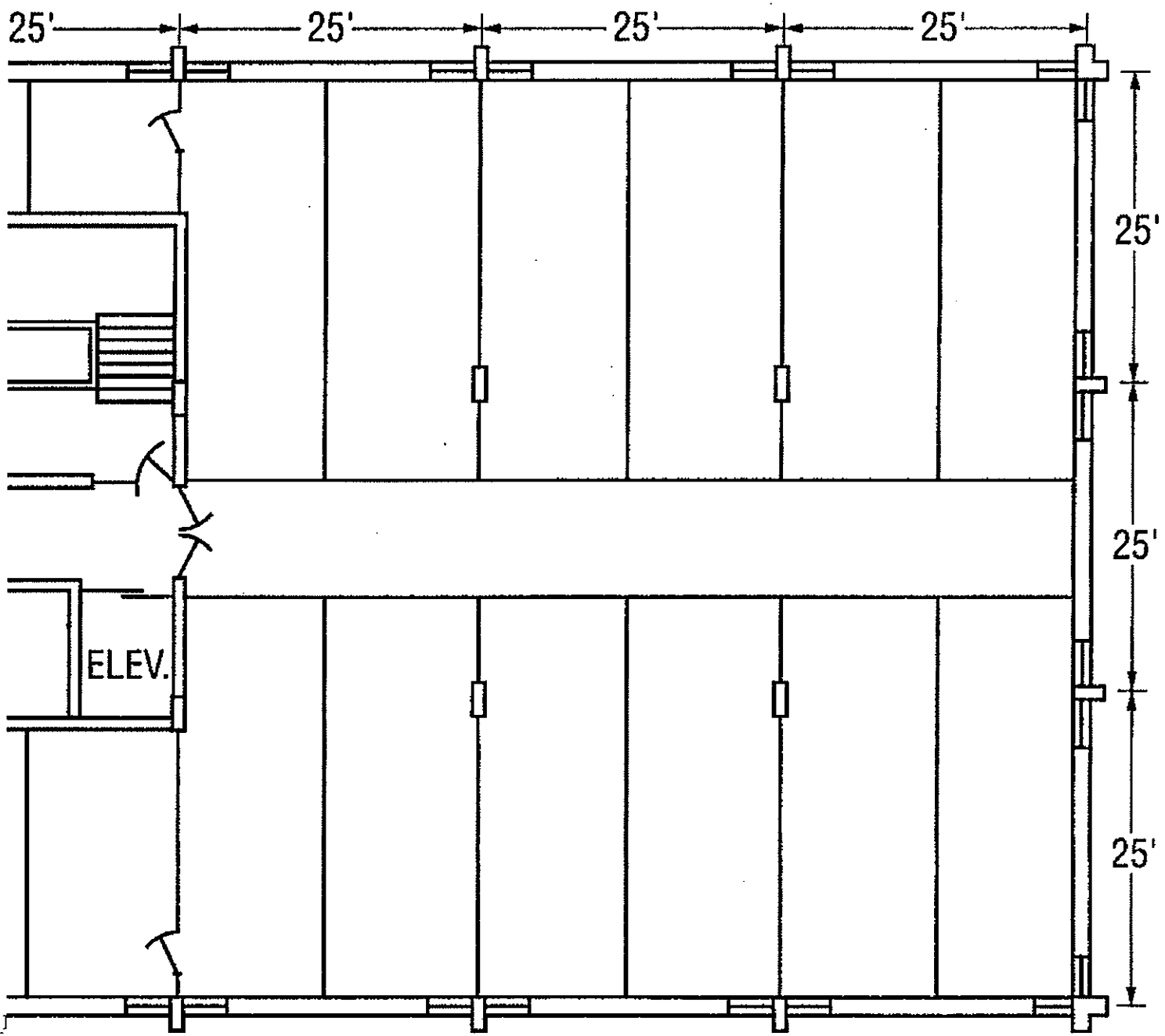

Locate:
All Fan Coil Risers
Ventilation AHU
(2) Casino AHU's
Chiller Plant

Vertical Riser

Vertical Drop

F Fan Coil Unit

C Chiller

Supply Pipe

Return Pipe



RISER GPM NEEDS SCHEDULE

DATE:	RISER GPM NEEDS SCHEDULE:	PROJECT PROJECT TEAM NO

EXPOSURE																		
ROOM NO																		
RISER NO																		
FLOOR	GPM Ea.	TOT GPM	GPM Ea.	TOT GPM	GPM Ea.	TOT GPM	GPM Ea.	TOT GPM	GPM Ea.	TOT GPM	GPM Ea.	TOT GPM	GPM Ea.	TOT GPM	GPM Ea.	TOT GPM	GPM Ea.	TOT GPM
19																		
18																		
17																		
16																		
15																		
14																		
13																		
12																		
11																		
10																		
9																		
8																		
7																		
6																		
5																		
4																		
3																		
2																		
Riser Tot																		

VERTICAL SKETCH

Use BOTH of the two dimensional sketches on the following pages that view the building vertically from the south. Show how chilled water is supplied from the Chiller Plant in the basement, flows through all the Stack Units on the south face and returns to the Chiller Plant.

Leave the supply and return header lines as stub-outs in the basement leading to the Chilled Water Plant that we have yet to design.

Show GPM values for the supply header and return header as they deliver and collect GPM from the risers.

VERTICAL SKETCH - WEST

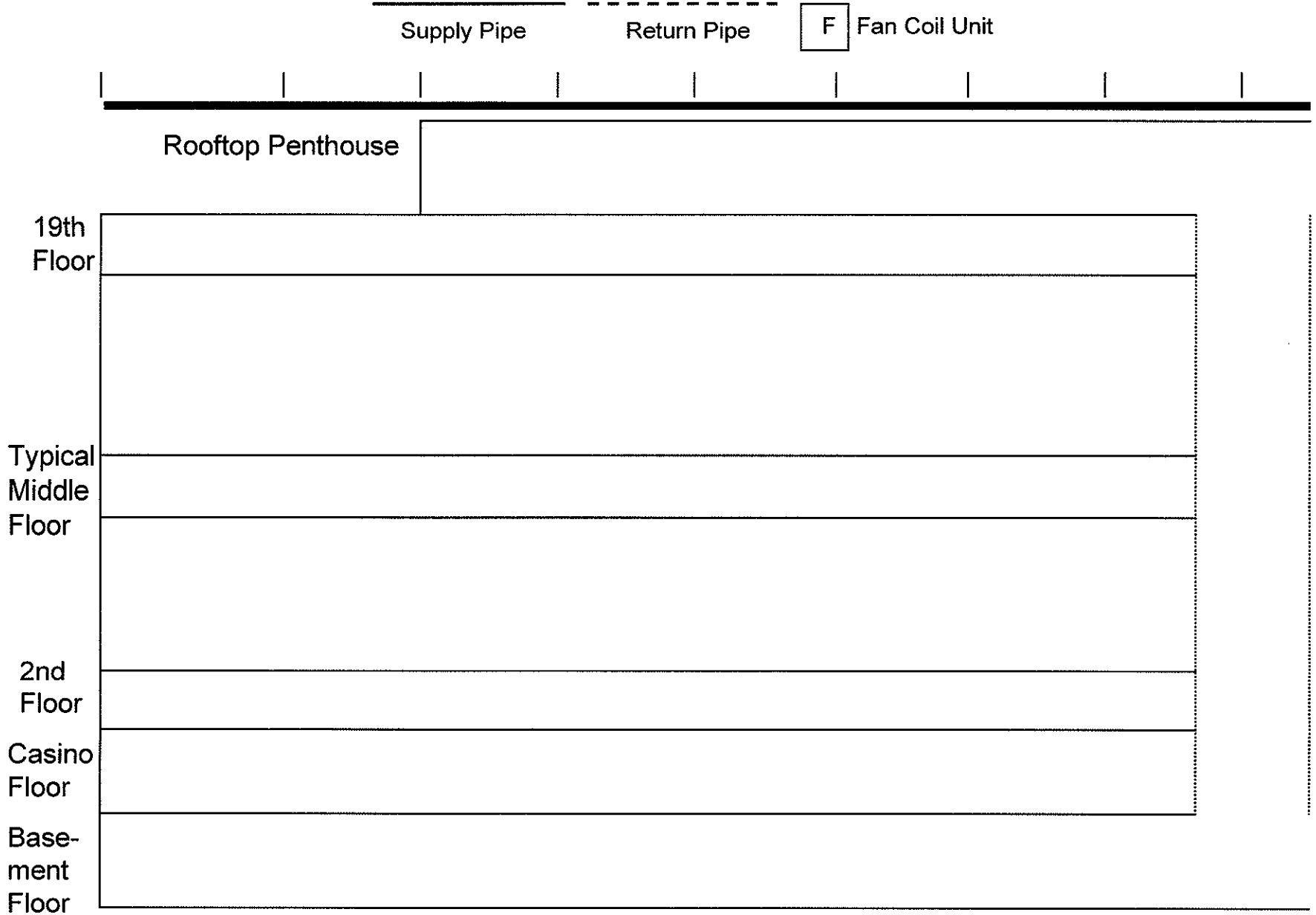



VERTICAL SKETCH - EAST

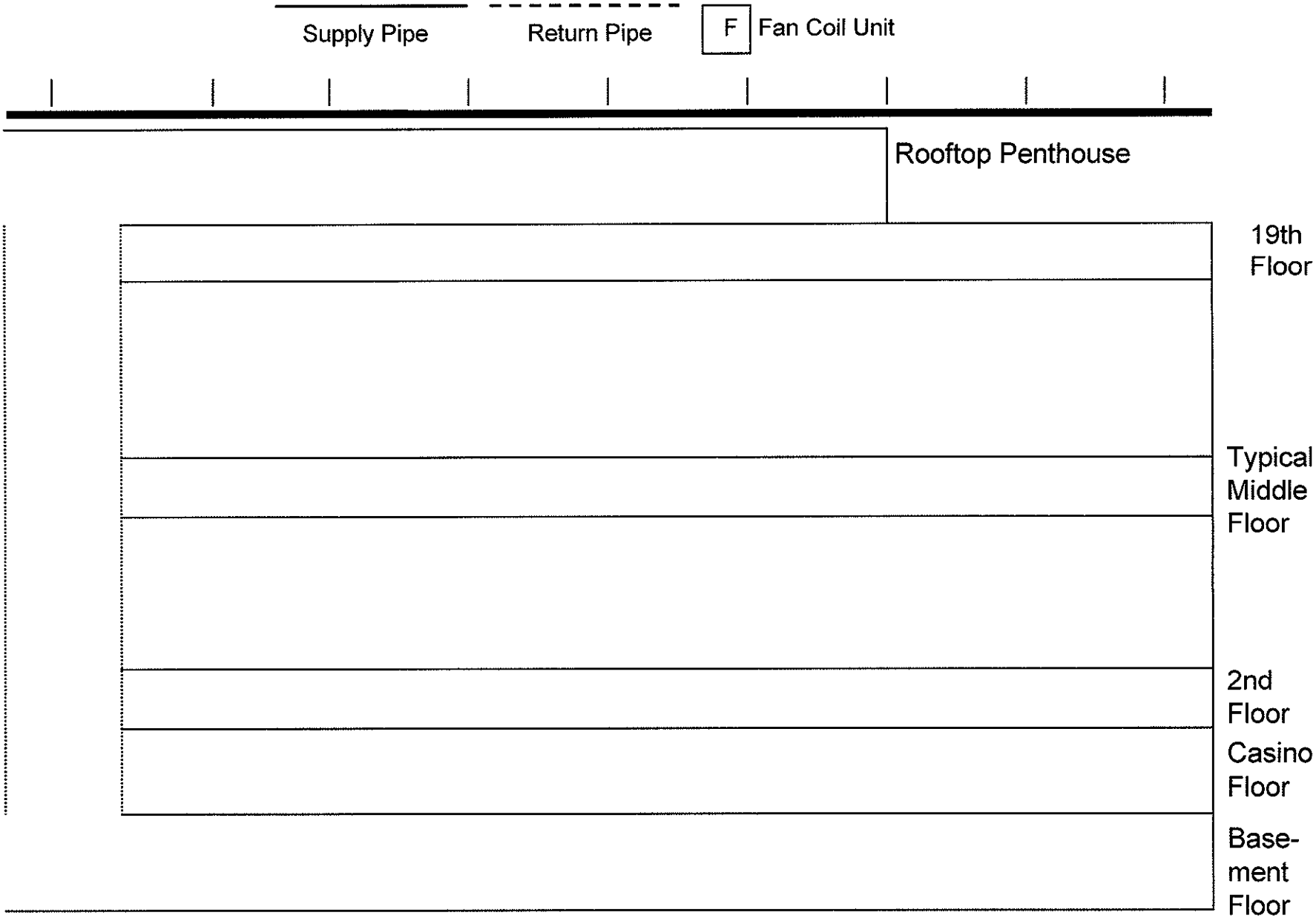



TOTAL CHILLER PLANT GPM

TOTAL CHILLED WATER PLANT GPM FORM			
TOTAL GPM NEEDED BY ALL THE FAN COIL UNITS: (SHOW YOUR CALCULATIONS)			
		TOTAL FAN COIL GPM	
TOTAL GPM NEEDED BY THE VENTILATION AIR HANDLER:		VENT AHU GPM	
TOTAL GPM NEEDED FOR THE TWO CASINO AIR HANDLERS:			
GPM NEEDED BY ONE	X 2	TOTAL CASINO AHU GPM	
GRAND TOTAL GPM NEEDED BY CHILLED WATER PLANT:			



PROJECT: PIPE SIZING

We can now use the computer program to **size the Room Fan Coil Piping System for the Design Project**. The problem can be divided up into (3) separate problems:

1- Typical Fan Coil Unit:

Run the program for a typical Fan Coil Unit with the control package you selected for your project. Consider a balance valve to be equal to a gate valve, a ball valve to be equal to a gate valve, and a control valve (2 or 3-way) to be equal to a globe valve. Also consider - for the sake of simplicity in the project - that all Fan Coil Terminals have the same pressure loss - pick one from your previous work with the GPM schedules. Include "T" losses at both ends of the pipe section to cover connections to the supply and return headers. When you run the program for this one pipe section, you will arrive at a pressure loss for the overall Fan Coil Circuit of every Fan Coil Terminal in the building. **Provide layout sketch.**

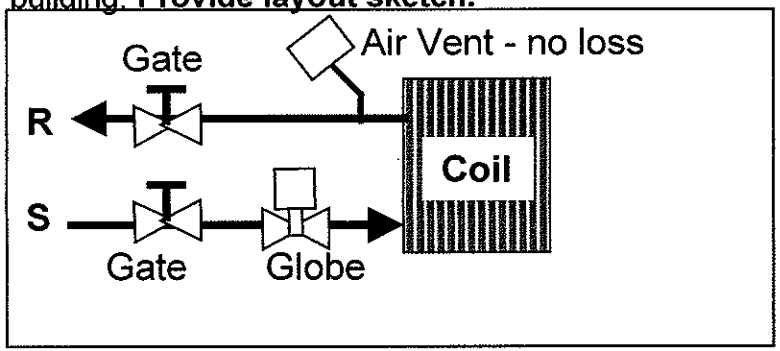

2- Typical Stack Unit Riser System:

Layout and run the program for one Stack System Supply and Riser - consistent with your choice of direct or reverse return for the stack risers. For each pipe section that branches off to a Fan Coil Terminal, enter the Fan Coil Circuit loss from step (1) as a known loss. When you have done this, you will arrive at an overall pressure loss for every Stack System rising vertically through the building. Provide a rough estimate of the friction loss in the riser feedings feeding the Ventilation AHU. **Provide layout sketch.**

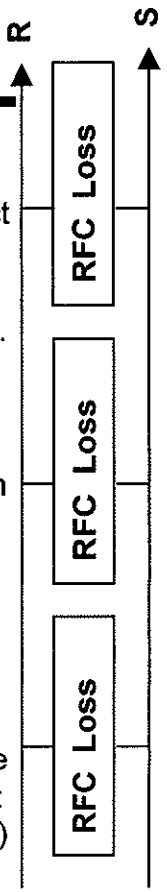

3- Supply/Return Headers:

Layout and run the program for the supply and return headers that provide chilled water to the Fan Coil System consistent with your choice of direct or reverse return. For each pipe section that branches off to a set of stack risers, enter the stack circuit loss from step (2) as a known loss. When you have done this, you will arrive at an overall pressure loss for the total Fan Coil System up to the Chilled Water Plant. Provide a rough estimate for each of two branch circuits feeding each public floor AHU. **Provide layout sketch**

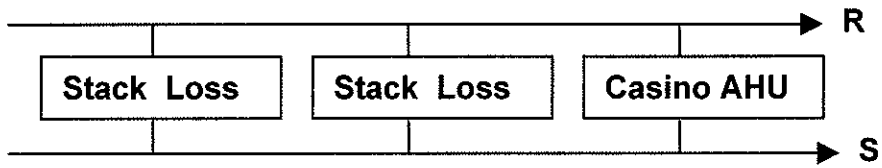



COMPUTER INPUT - PIPE SIZING

Date: _____ Name: _____

Job: _____ Water Piping Design Worksheet Sheet: _____

Sect.	Junction Begin	Junction End	Sup. (x)	Ret (x)	Other ( )	Sect. GPM	Peak GPM	Div. GPM	Pipe Size	Pipe Len.	Fittings	Fit. E.L.	Tot. E.L.	Fric. Rate	ΔP in.wg

Notes:

16_DES700_DesProj_Ver3.0.0_MC

COMPUTER INPUT - PIPE SIZING

Date: _____ Name: _____

Job: _____ Water Piping Design Worksheet Sheet: _____

Sect.	Junction Begin	Junction End	Sup. (x)	Ret (x)	Other ( )	Sect. GPM	Peak GPM	Div. GPM	Pipe Size	Pipe Len.	Fittings	Fit. E.L.	Tot. E.L.	Fric. Rate	ΔP in.wg

Notes:

16_DES700_DesProj_Ver3.0.0_MC

COMPUTER INPUT - PIPE SIZING

Date: _____ Name: _____

Job: _____ Water Piping Design Worksheet Sheet: _____

Sect.	Junction Begin	Junction End	Sup. (x)	Ret (x)	Other ( )	Sect. GPM	Peak GPM	Div. GPM	Pipe Size	Pipe Len.	Fittings	Fit. E.L.	Tot. E.L.	Fric. Rate	ΔP in.wg

Notes:

16_DES700_DesProj_Ver3.0.0_MC

COMPUTER INPUT - PIPE SIZING

Date: _____ Name: _____

Job: _____ Water Piping Design Worksheet Sheet: _____

Sect.	Junction Begin	Junction End	Sup. (x)	Ret (x)	Other ( )	Sect. GPM	Peak GPM	Div. GPM	Pipe Size	Pipe Len.	Fittings	Fit. E.L.	Tot. E.L.	Fric. Rate	ΔP in.wg

Notes:

16_DES700_DesProj_Ver3.0.0_MC

CHILLER PLANT FORM

CHILLER PLANT CONFIGURATIONS:	CHECK OFF THE ONES THAT APPLY TO YOUR CHILLER PLANT: IN THE SAPCE BELOW JUSTIFY YOUR CHOICES
1- Single Chiller	
2- Single Loop With Chillers in Series	
3- One of the Following Parallel Configurations	
a) Single Loop With Dedicated Chiller Pumps	
b) Single Loop With Parallel ("Ganged") Pumps	
c) Primary-Secondary Pumping Loops	
d) Differential Bypass Flow Control	
4- Air Cooled Condensers	
5- Water Cooled Condensers	
e) Cooling Tower Bypass	
6- Carrier Comfort Network Chiller Plant Control	



CHILLER PLANT SCHEDULE FORM

CHILLER PLANT ROOM SCHEDULE FORM						
CHILLER PLANT GPM NEEDS:						
ROOM TERMINAL GPM NEEDED						
AIR HANDLER GPM NEEDED						
TOTAL CHILLER PLANT ROOM GPM NEEDED						
CHILLER BLOCK LOAD FROM LOAD SUMMARY FIGURES SHOW YOUR CALCULATIONS HERE:						
BLOCK LOAD TONS						
CHILLER PLANT DESIGN RISE:	SHOW CALCULATIONS HERE:					
CALCULATED						
CHOSEN FOR DESIGN						
CHILLER PLANT LEAVING CHILLED WATER TEMPERATURE HOW DID YOU ARRIVE AT THIS?						
CHILLER PLANT ENTERING TEMPERATURE						
CHILLER PLANT CHOSEN						
TYPE OF PLANT:				TYPE OF CHILLER:		
EVAPORATORS	SERIES		PARALLEL		TOWER APPROACH	
CONDENSERS	COUNTER-FLOW		PARALLEL		1% DESIGN WB TEMP	
CONDENSER TYPE	AIR COOLED		WATER COOLED		TOWER RETURN TEMP	
	ENTERING AIR TEMP				CONDENSER GPM	
NUMBER OF CHILLERS: WHY DID YOU CHOSE THIS NUMBER?			NUMBER OF CHILLERS			
			CHILLER 1 CAPACITY			
			CHILLER 2 CAPACITY			
			CHILLER 3 CAPACITY			
			CHILLER 4 CAPACITY			



CHILLER COMPUTER PROGRAM INPUT

Job Name:				
Prepared by:				
UnitTag Information				
UnitTag Name				
Location				
Buyer P.O.				
Date				
Program Version				
Inputs:	**A**	**B**	**C**	
Cooling Capacity				Tons
Evap. Fouling Factor				
Evap. Brine				
Evap. Leaving Temp				F
Evap. Entering Temp				F
Condenser Type				
Compressor Type				
Refrigerant				
Hertz				
Unit Size				
Volts				
Cond Entering Temp				F
Cond GPM				gpm/ton
Cond Brine				
Cond Fouling factor				
Suction Servise Valve				
Evaporator Passes				
Condenser Passes				

- Use this form to gather data before running the Chiller Selection Program
- Provide a filled in version of this for the Design Project



PUMP SELECTION FORM

(Chilled Water Loop)

- Find form in Design Project
- Total GPM needed by the building (show how you arrived at this): _____ GPM
- Estimated worst circuit resistance from previous exercise: _____ ft wg
- Select a pump from those in the Design Project:
  - Establish final operating point
  - Head = _____ ft
  - GPM = _____
  - BHP = _____
- Attach pump curve with system curve plot



PUMP 10EK - 1750 RPM

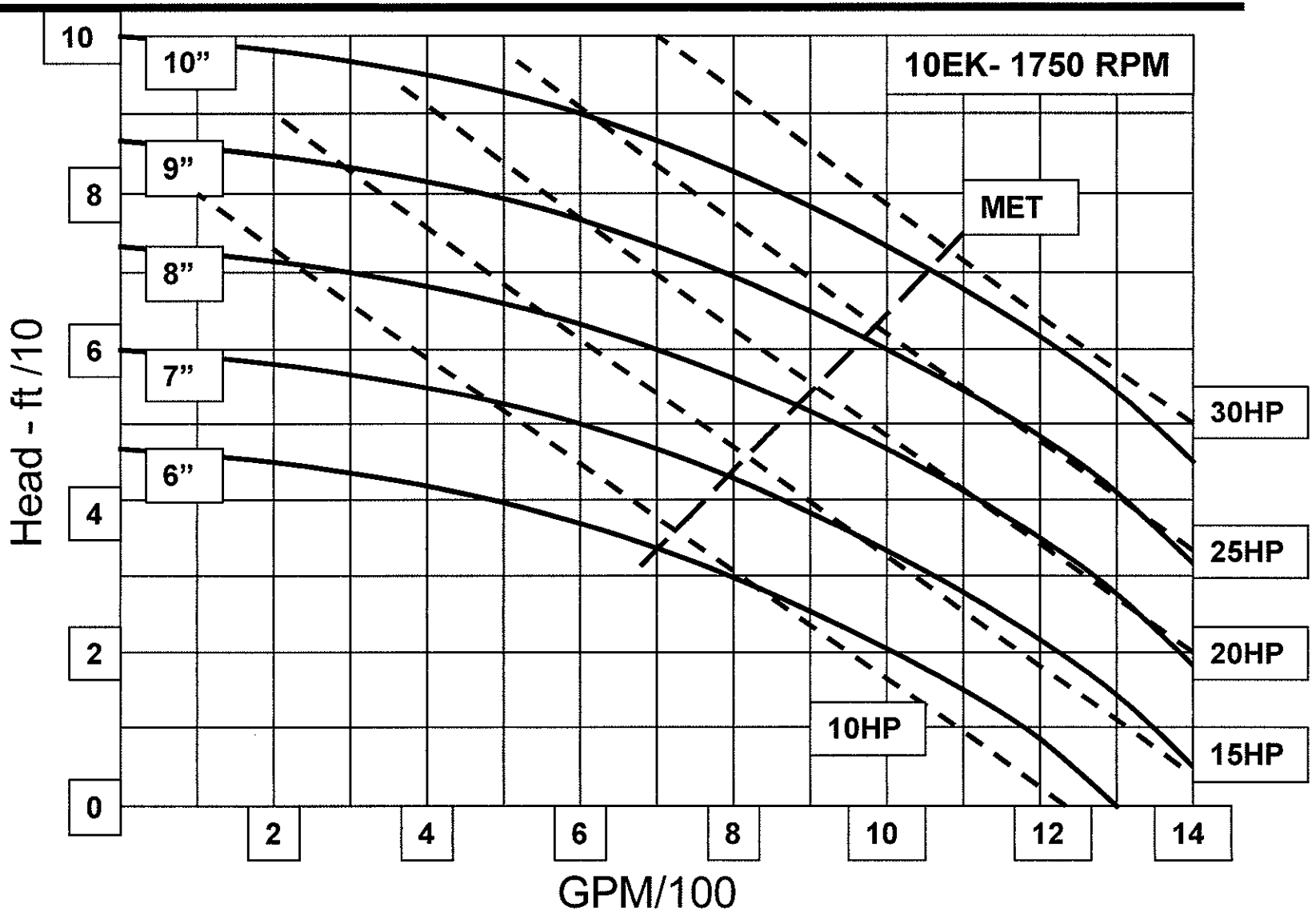



PUMP 6DK - 1750 RPM

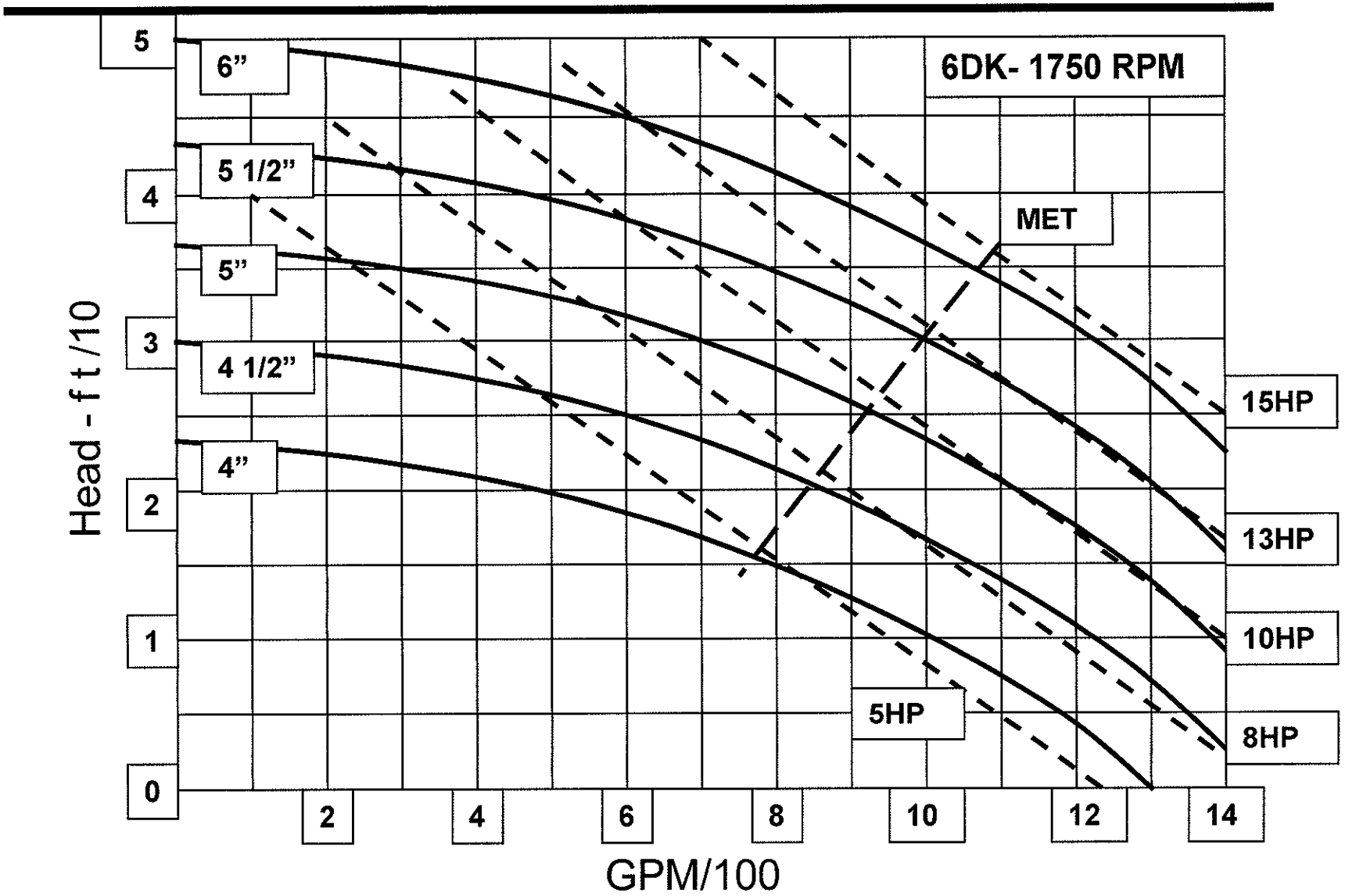



PUMP 7BM - 1750 RPM

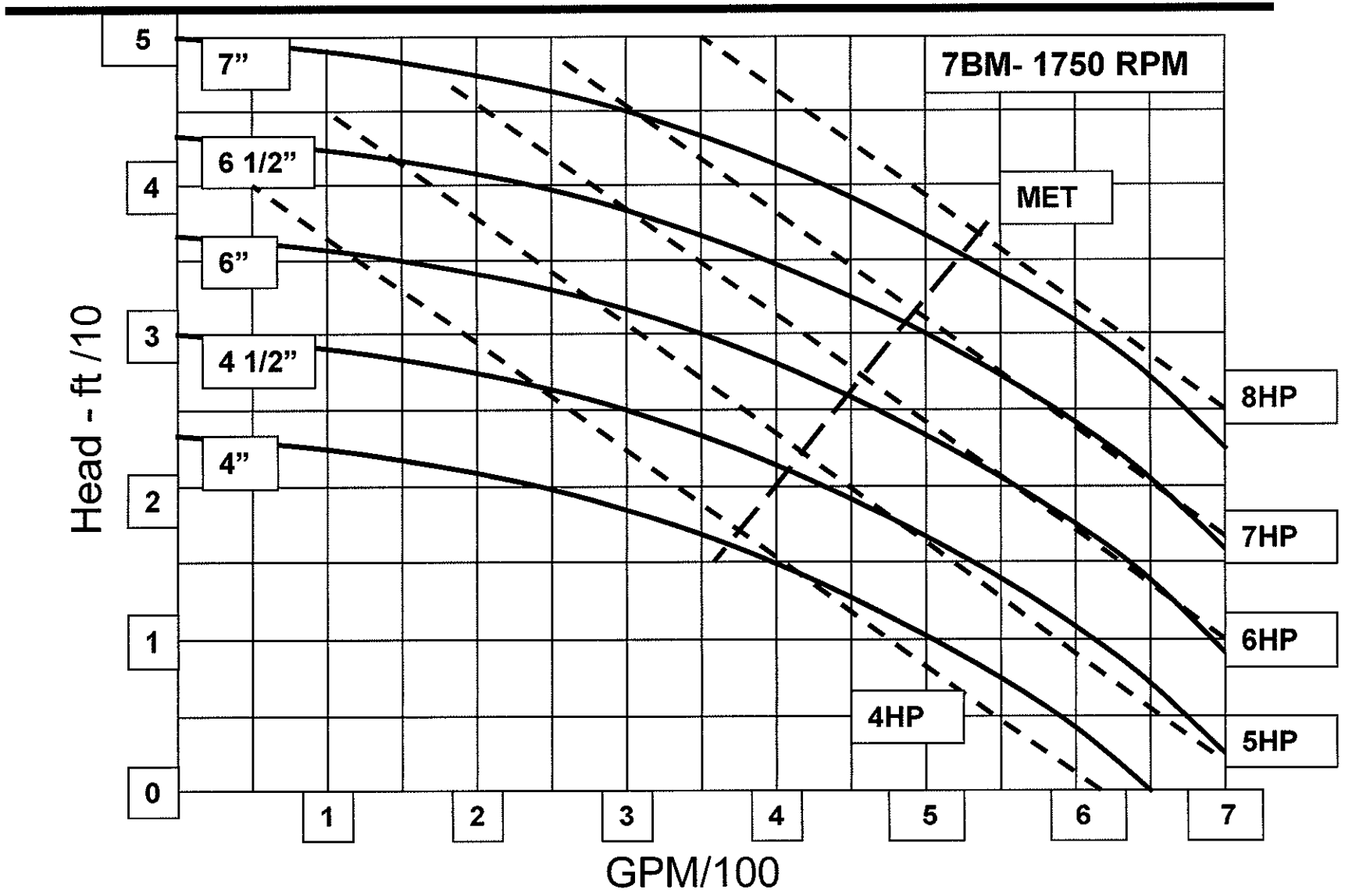



PUMP 7AR - 1750 RPM

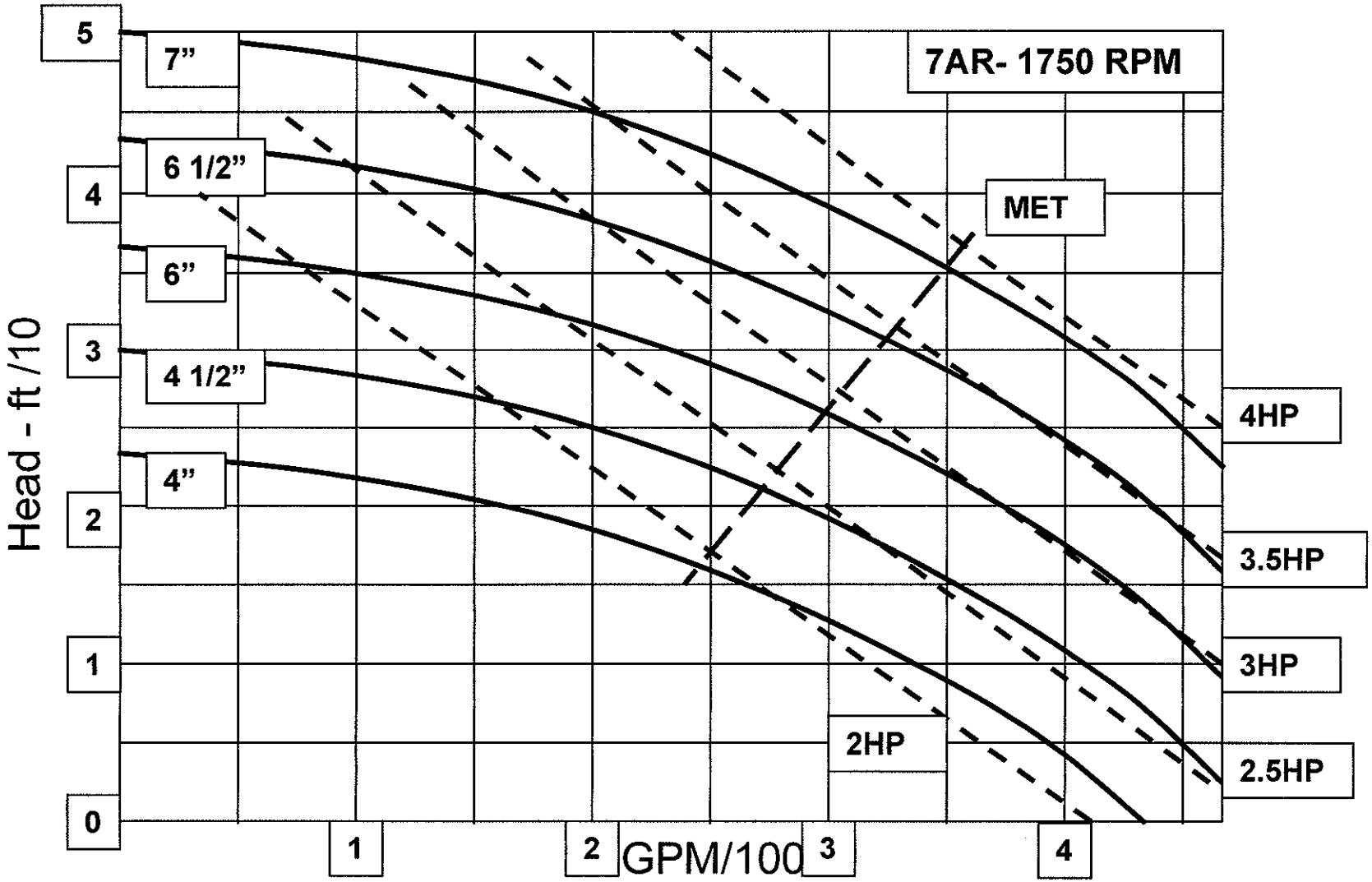



END

