

Johan Hansson, Control Systems and Products Asia, 2009-02-19

IEC61850 Electrical Integration in System 800xA

© ABB Group

Power and productivity for a better world™

Outline

- IEC61850 standard
- Integration with System 800xA
- Value Propositions
  - One system for Process Control and Electrical Control
  - Enhanced Asset Management possibilities
  - Improved Power Management solution
- ABB project overview
- Demo

© ABB Group

Outline

- IEC61850 standard
- Integration with System 800xA
- Value Propositions
  - One system for Process Control and Electrical Control
  - Enhanced Asset Management possibilities
  - Improved Power Management solution
- ABB project overview
- Demo

IEC61850 standard
State before IEC61850 standard

- Communication with Intelligent Electrical Devices (IEDs)
- Serial communication for Substation Automation is recognized for some time
- However: A lot of different protocols used
- Large engineering, installation and maintenance costs

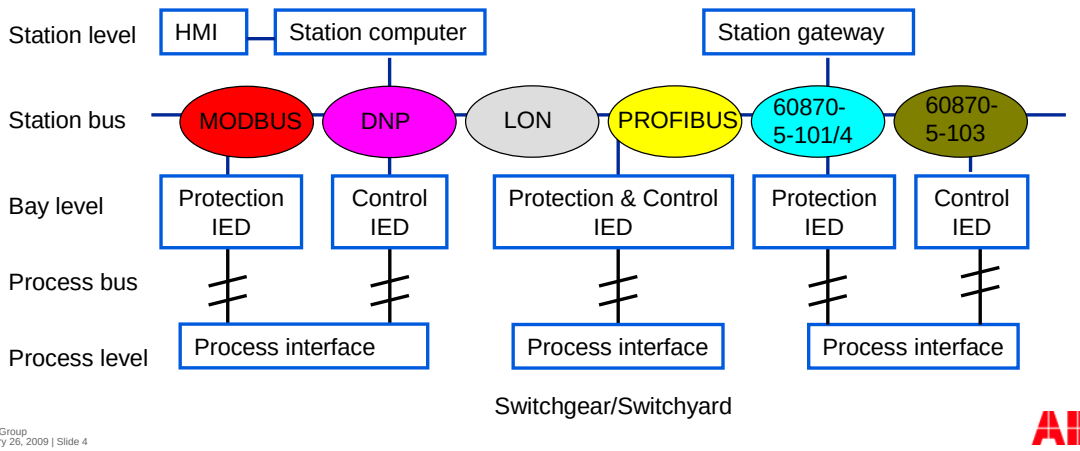

IEC61850 standard
Market requirements for a global standard

- Interoperability
  - The standard must assure ability for IEDs from different vendors to exchange information and to use the information for their own functions
- Free configuration
  - Different philosophies and free allocation of functions must still be possible
- Long term stability
  - The standard must be future proof and must evolve with information technology and system requirements

IEC61850 standard
The solution



- Common work between IEC committee and providers (mainly ABB, Areva and Siemens) 2001-2005
- Today about 1200 IEC61850 Substations worldwide
- Over 100 IEC61850 Substations from ABB

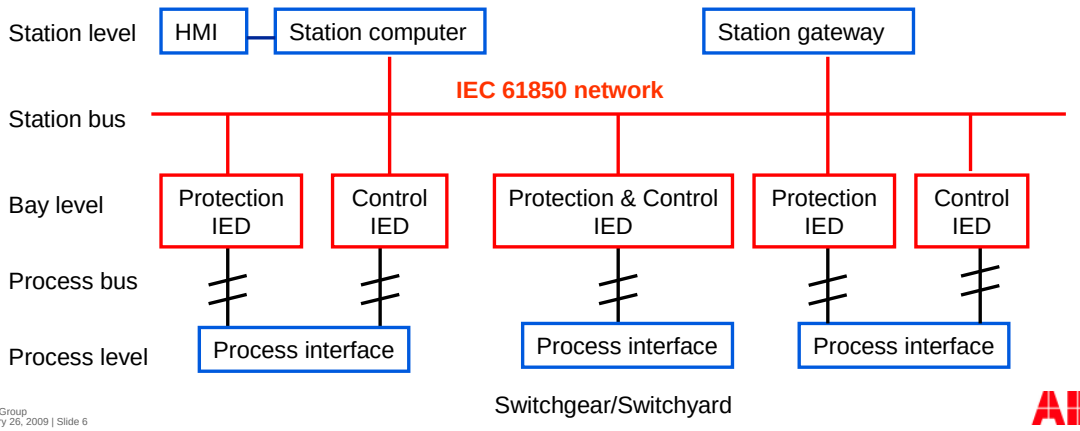

IEC61850 standard
The solution

- Interoperability
  - Standardized data model and services
  - Standardized communication language
- Free configuration
  - Standardization of function data exchange, not on function implementation
- Long term stability
  - Split of data model and communication
  - Based on standard Ethernet technology

Outline

- IEC61850 standard
- Integration with System 800xA
- Value Propositions
  - One system for Process Control and Electrical Control
  - Enhanced Asset Management possibilities
  - Improved Power Management solution
- ABB project overview
- Demo

Integration with System 800xA
The most comprehensive DCS on the market

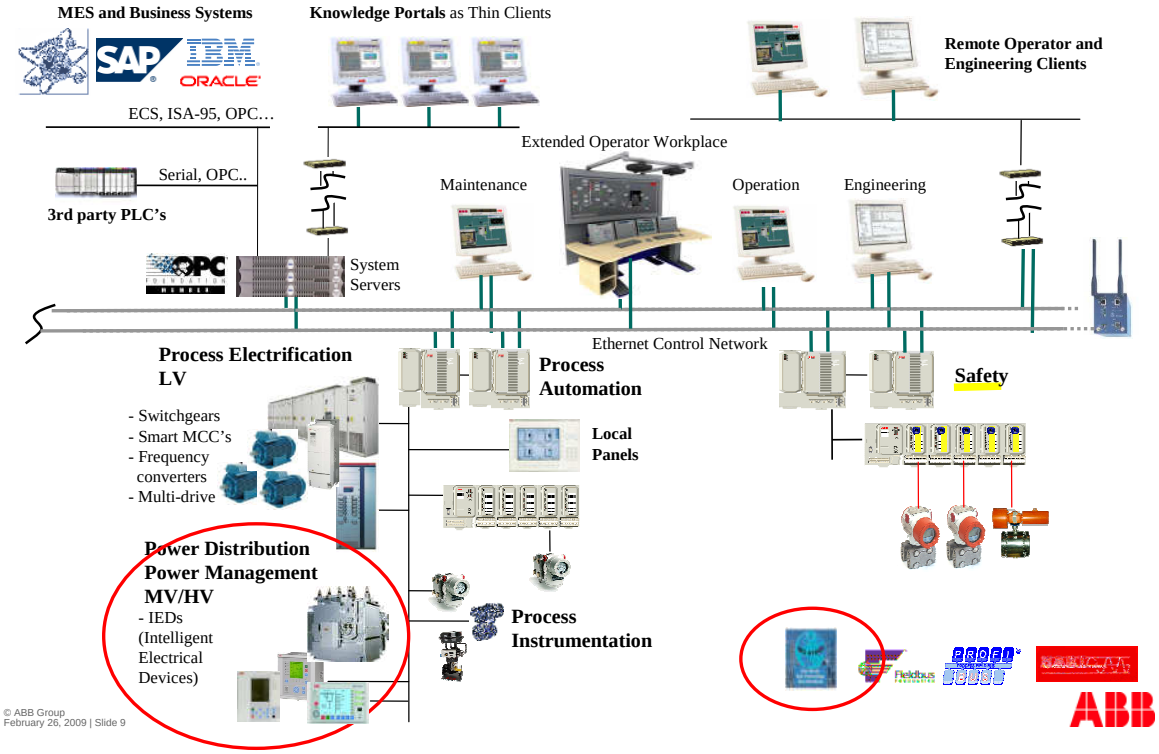

Integration with System 800xA
Vertical and horizontal integration

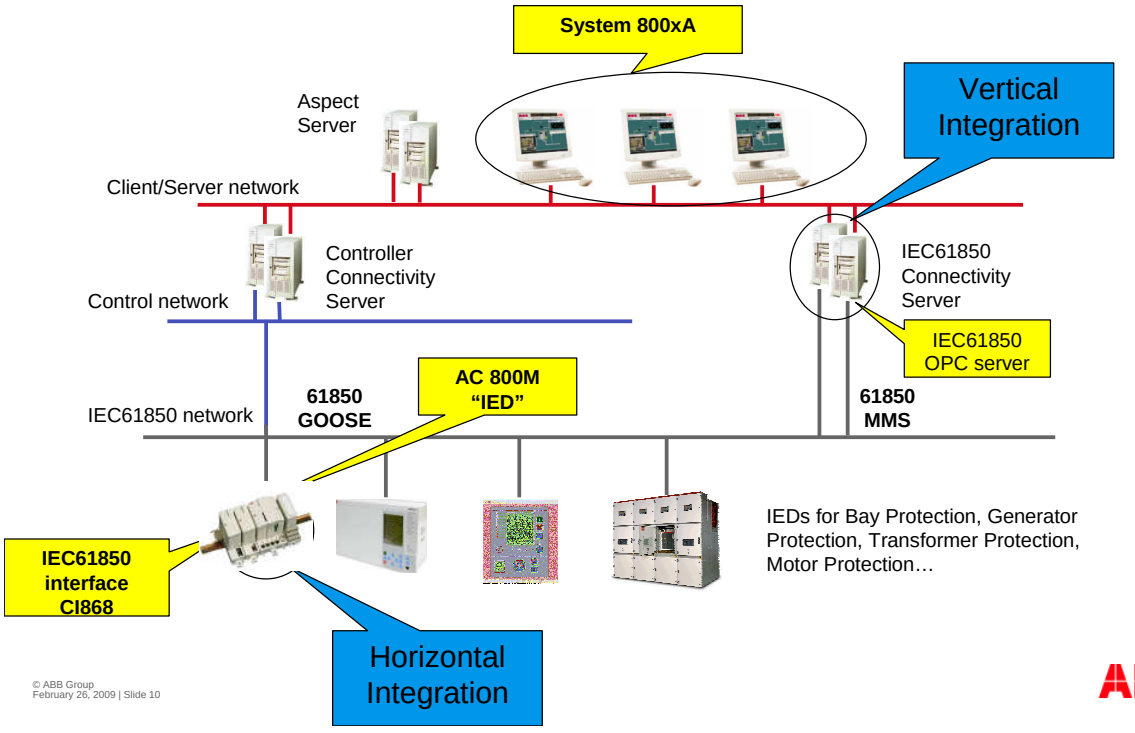

Outline

- IEC61850 standard
- Integration with System 800xA
- Value Propositions
  - One system for Process Control and Electrical Control
  - Enhanced Asset Management possibilities
  - Improved Power Management solution
- ABB project overview
- Demo

One system for Process Control and Electrical Control
The most comprehensive DCS on the market

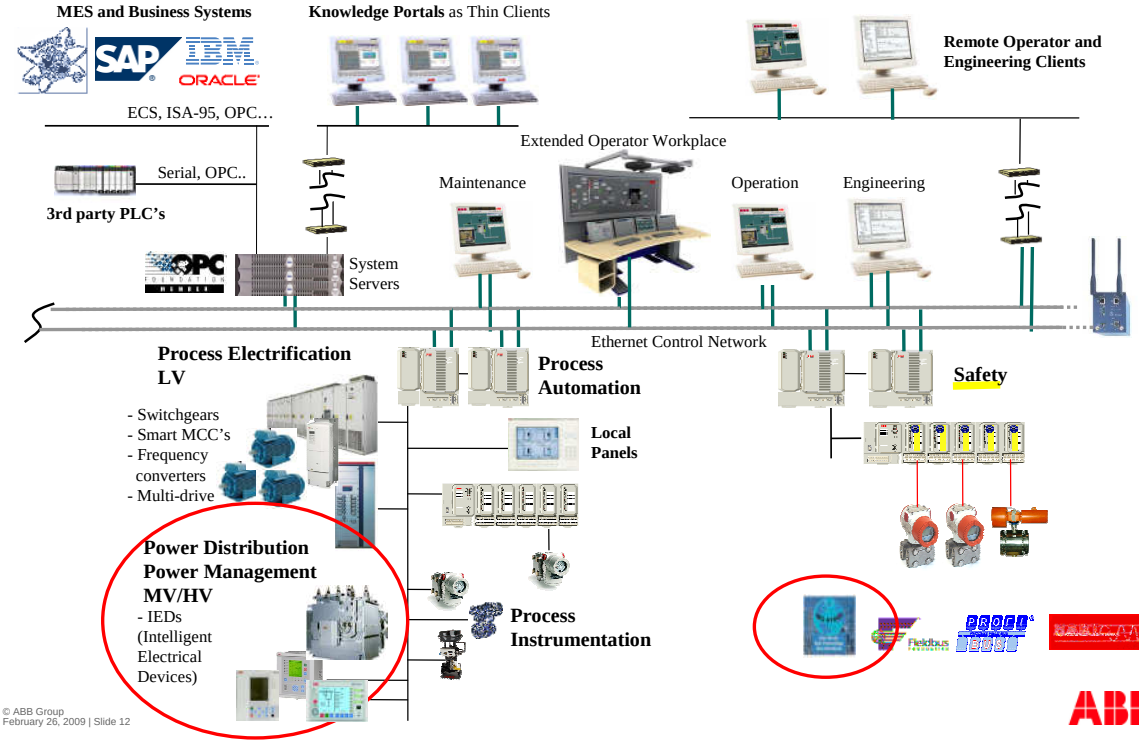

One system for Process Control and Electrical Control
Traditional way

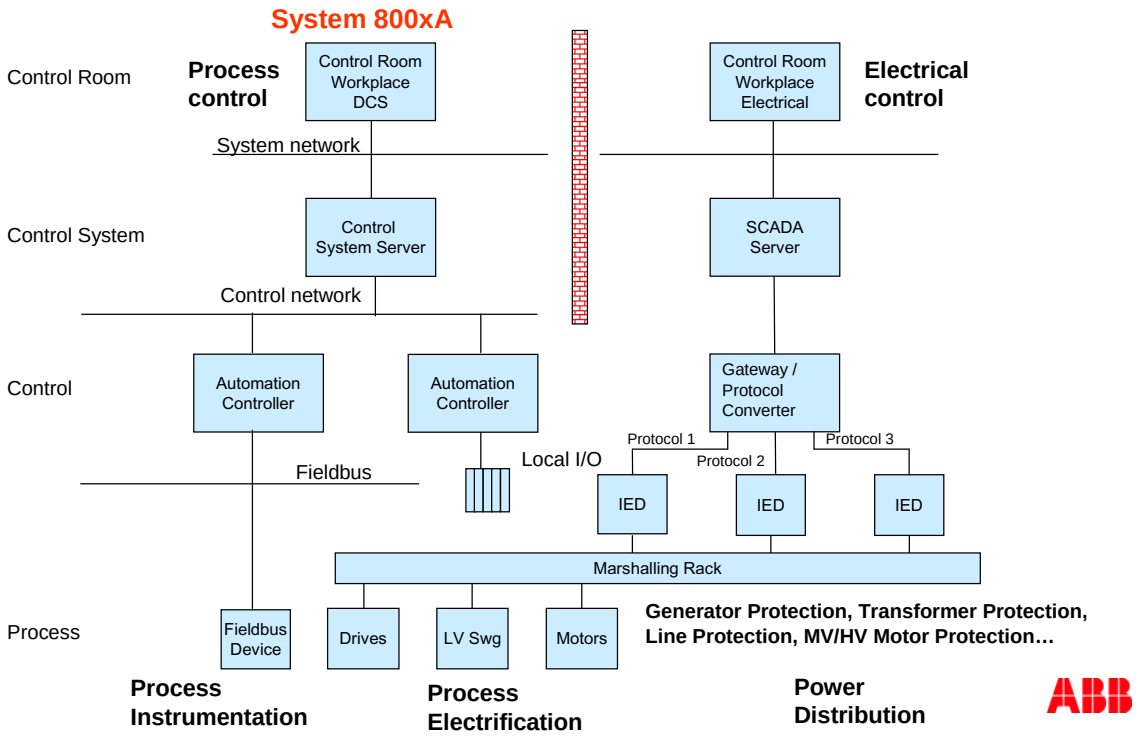

One system for Process Control and Electrical Control
Traditional way + Fieldbus

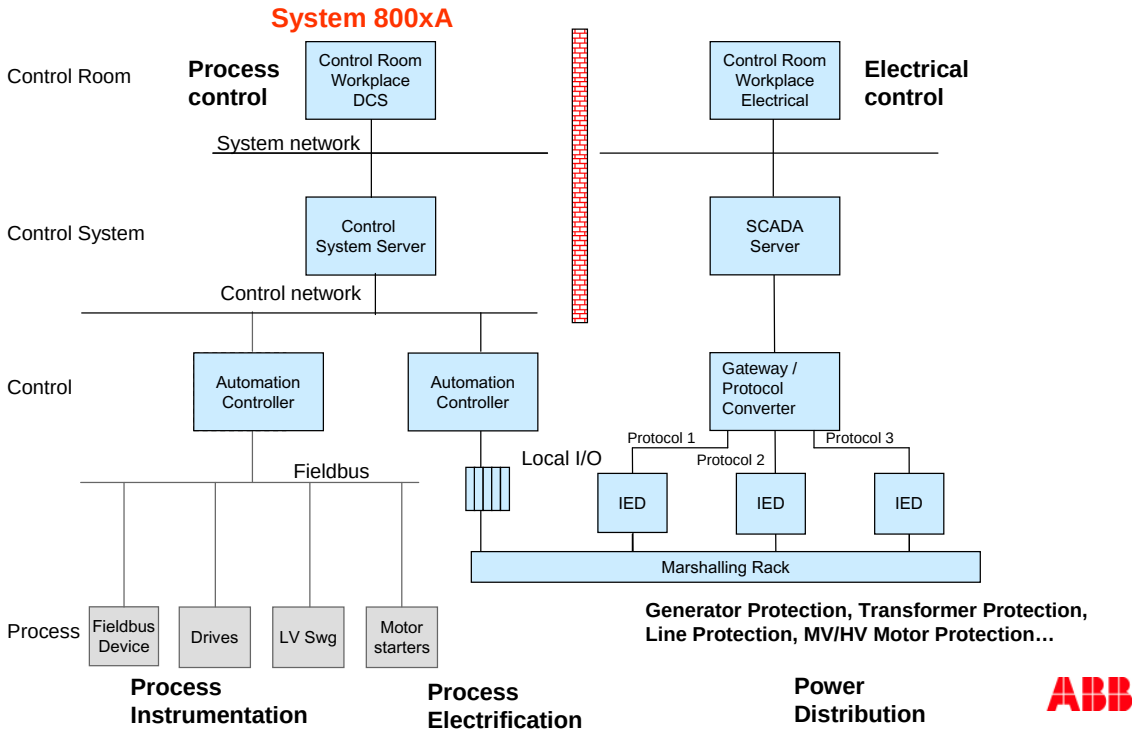

One system for Process Control and Electrical Control
IEC61850 integration – Separate electrical SCADA

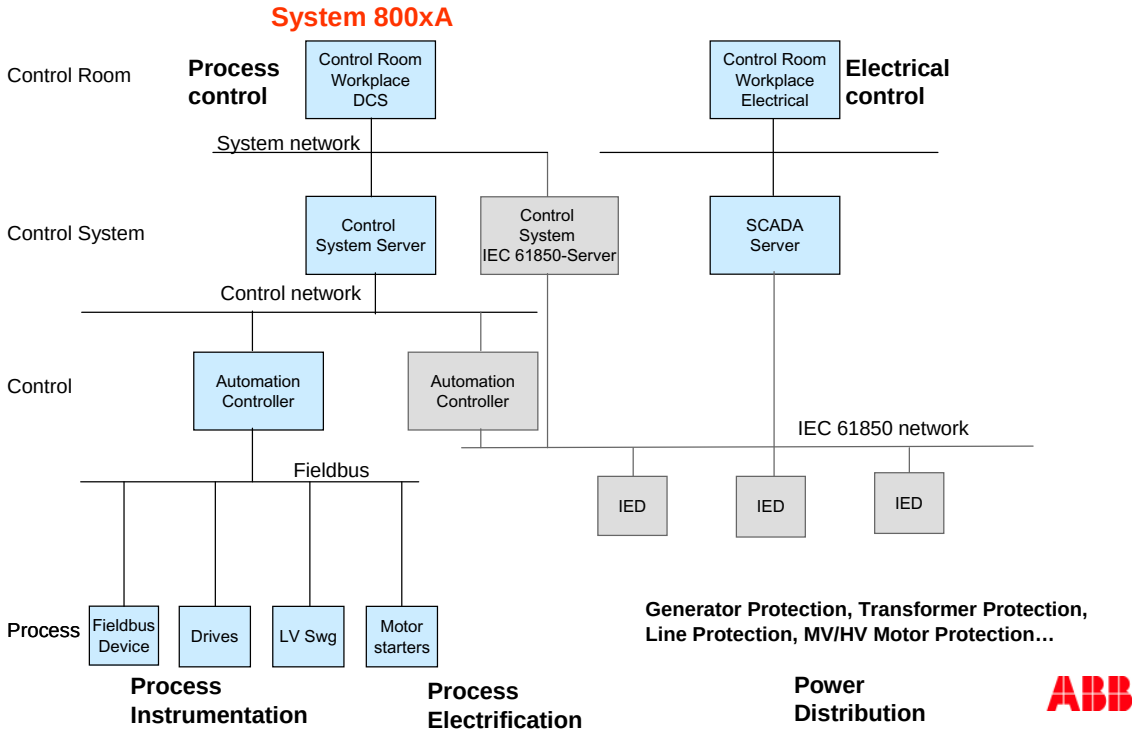

One system for Process Control and Electrical Control
Merging Process and Electrical into one system

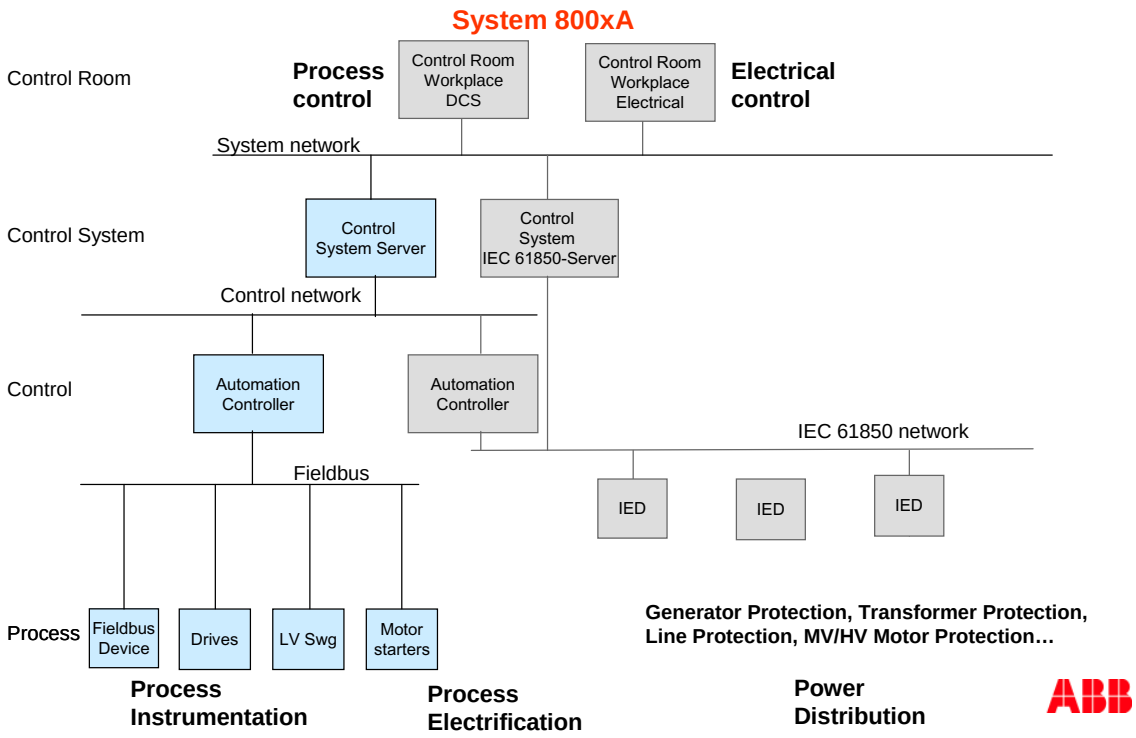

One system for Process Control and Electrical Control
Merging Process and Electrical into one workplace

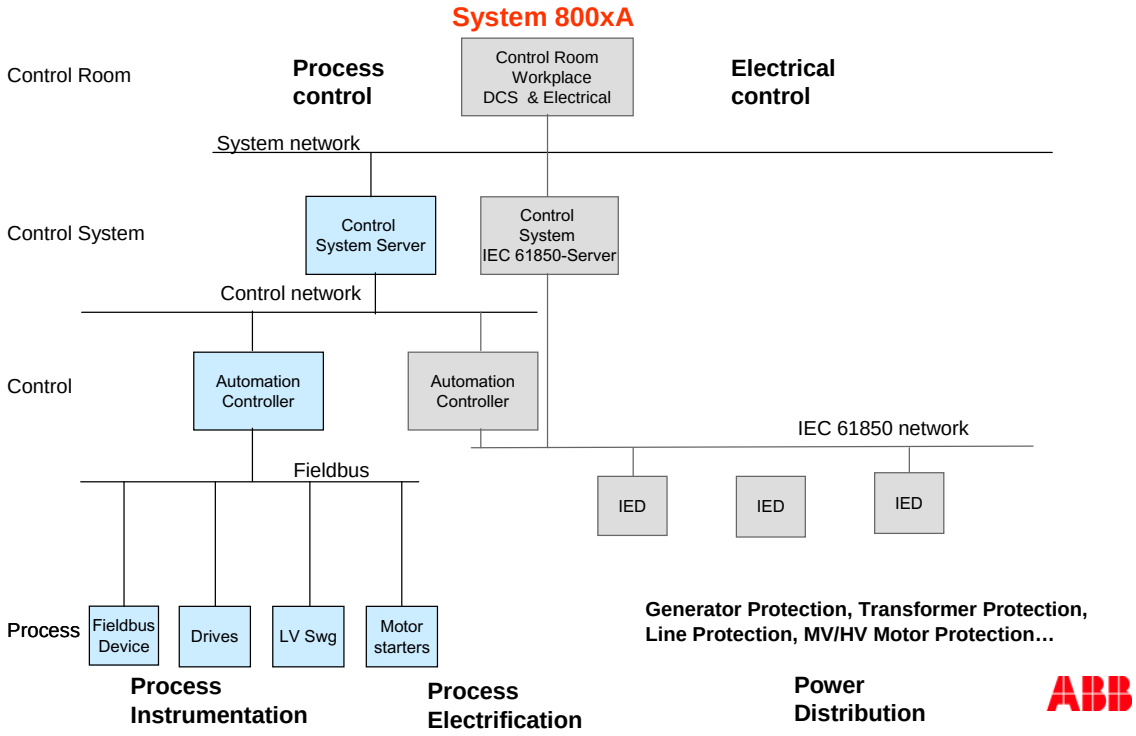

One system for Process Control and Electrical Control

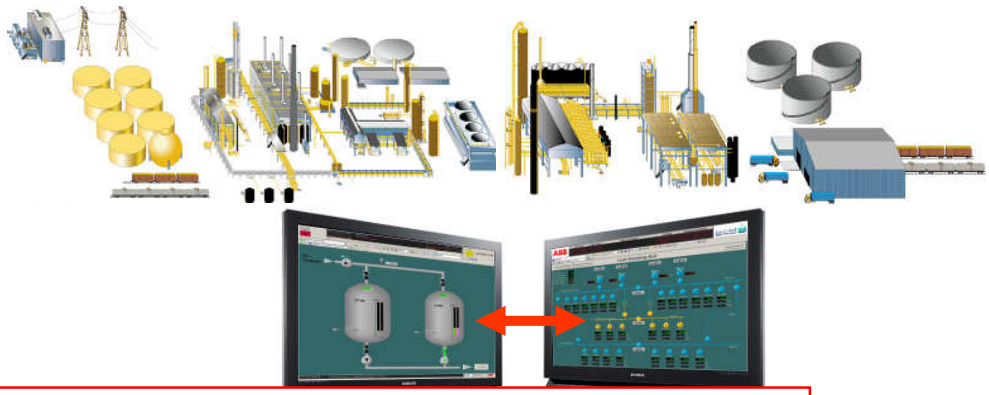

Customer benefits:

- Same system, spare parts, documentation…..
- Less training
- Less engineering
- Easier to configure and operate
- Unified way to maintain
- Optimization of human resources

Outline

- IEC61850 standard
- Integration with System 800xA
- Value Propositions
  - One system for Process Control and Electrical Control
  - Enhanced Asset Management possibilities
  - Improved Power Management solution
- ABB project overview
- Demo

Integration with System 800xA
Vertical and horizontal integration

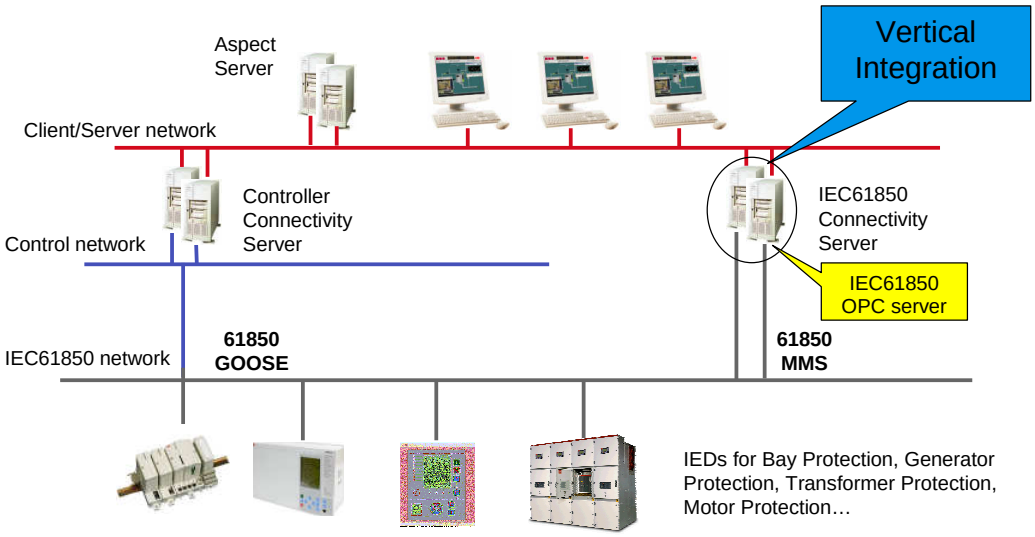

Enhanced Asset Management possibilities
Traditional way

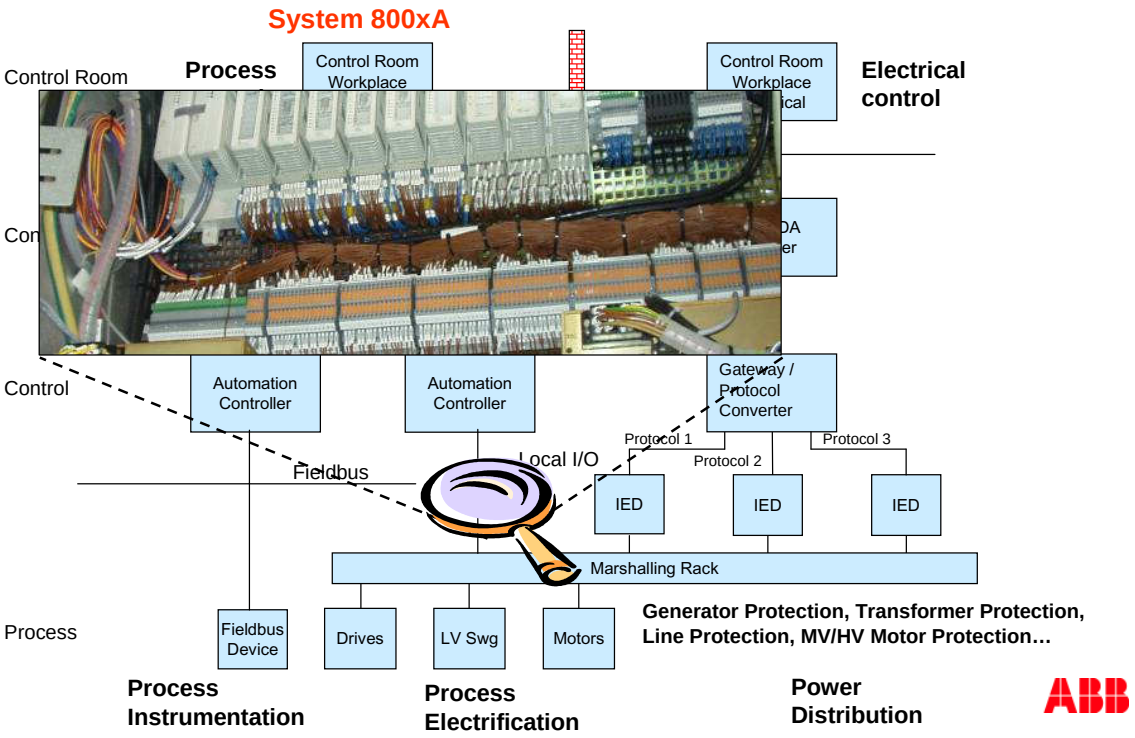

Enhanced Asset Management possibilities
With IEC61850 integration

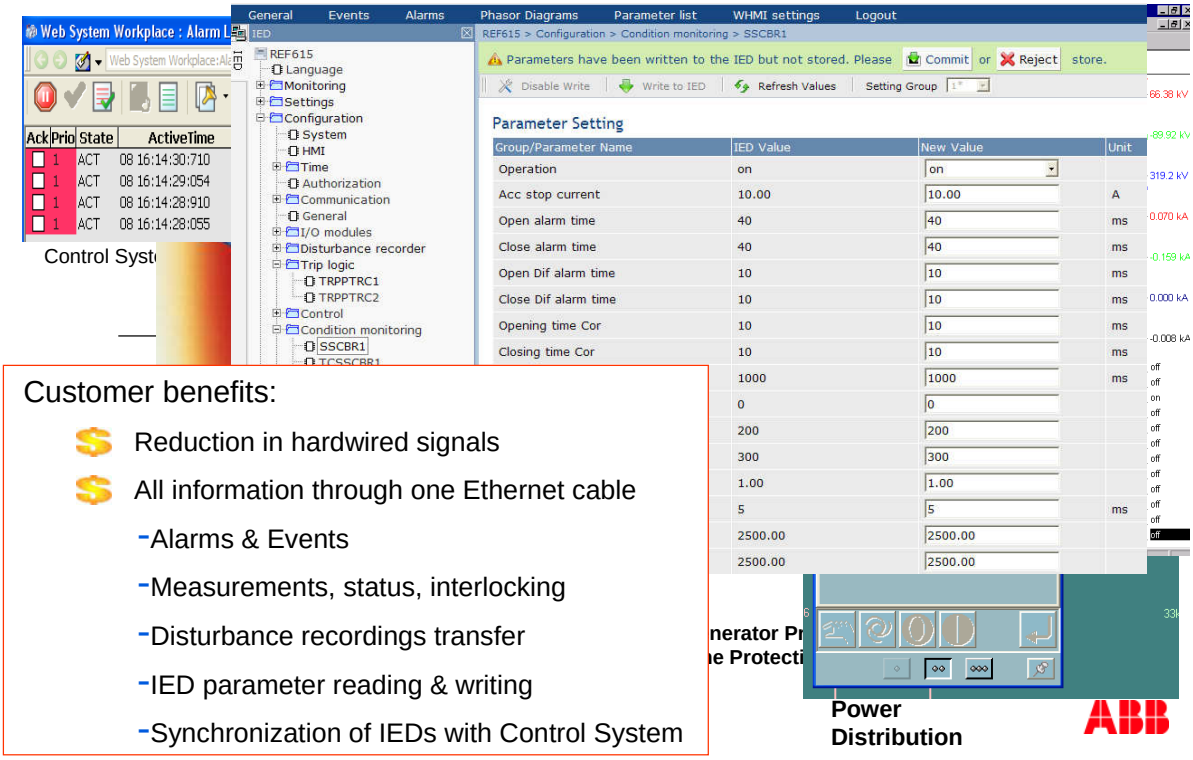

Customer benefits:

- Reduction in hardwired signals
- All information through one Ethernet cable
  - Alarms & Events
  - Measurements, status, interlocking
  - Disturbance recordings transfer
  - IED parameter reading & writing
  - Synchronization of IEDs with Control System

Outline

- IEC61850 standard
- Integration with System 800xA
- Value Propositions
  - One system for Process Control and Electrical Control
  - Enhanced Asset Management possibilities
  - Improved Power Management solution
- ABB project overview
- Demo

Integration with System 800xA
Vertical and horizontal integration

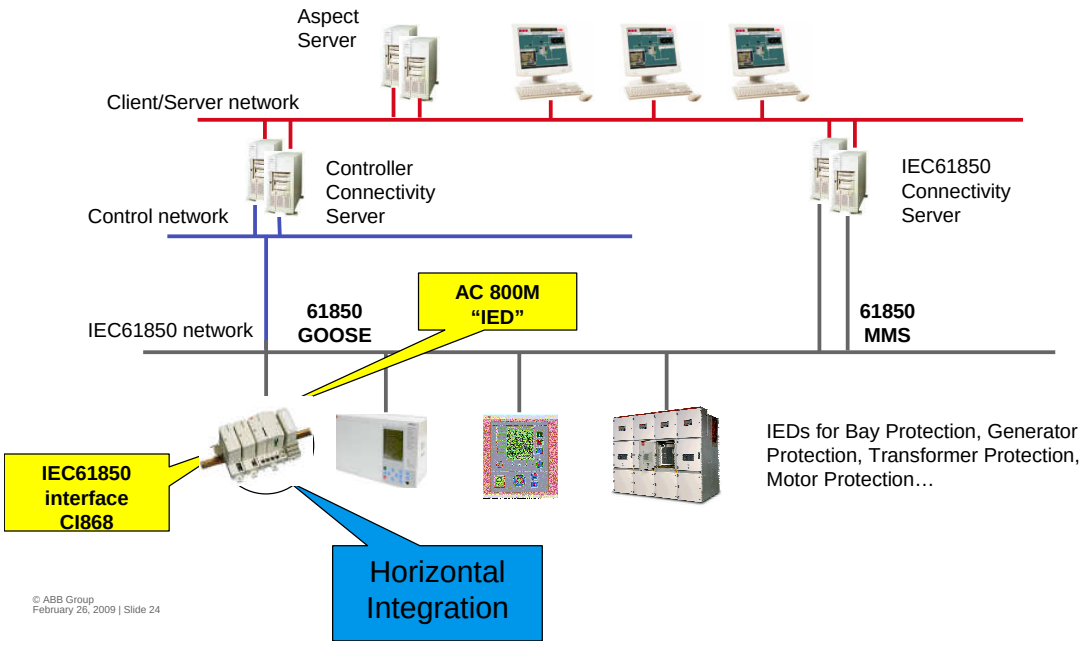

Improved Power Management solution
Traditional way

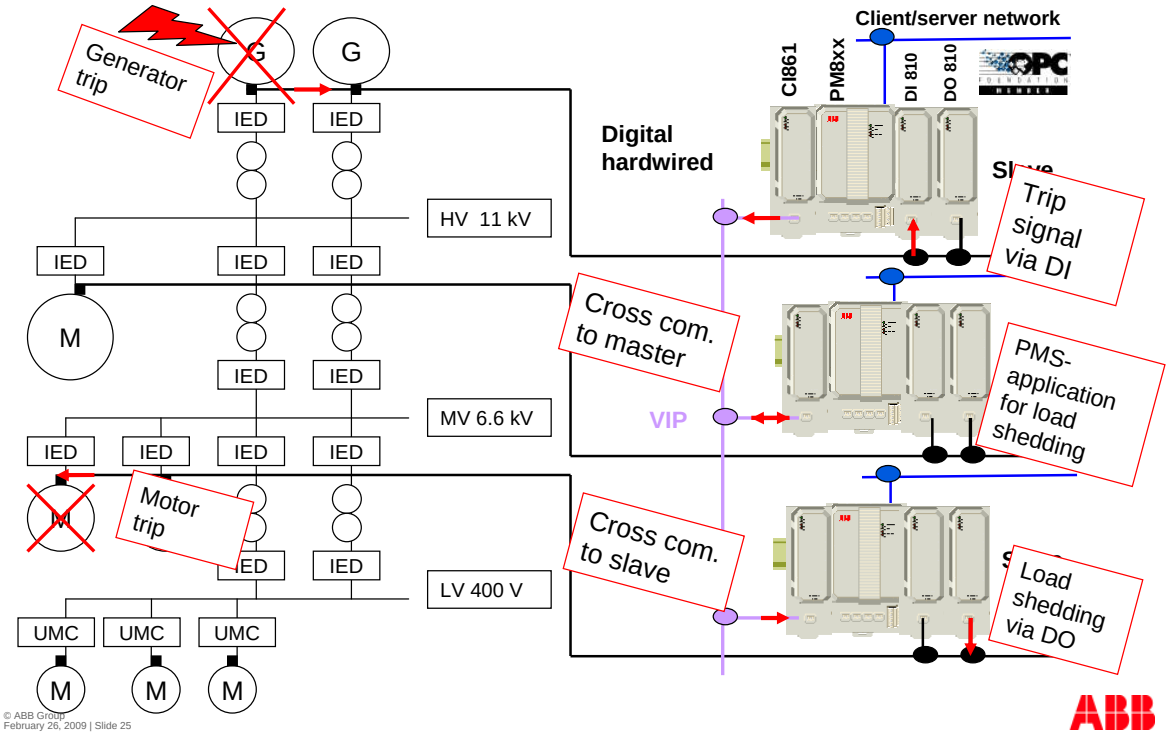

© ABB Group
February 26, 2009 | Slide 25

Improved Power Management solution
With IEC61850 integration

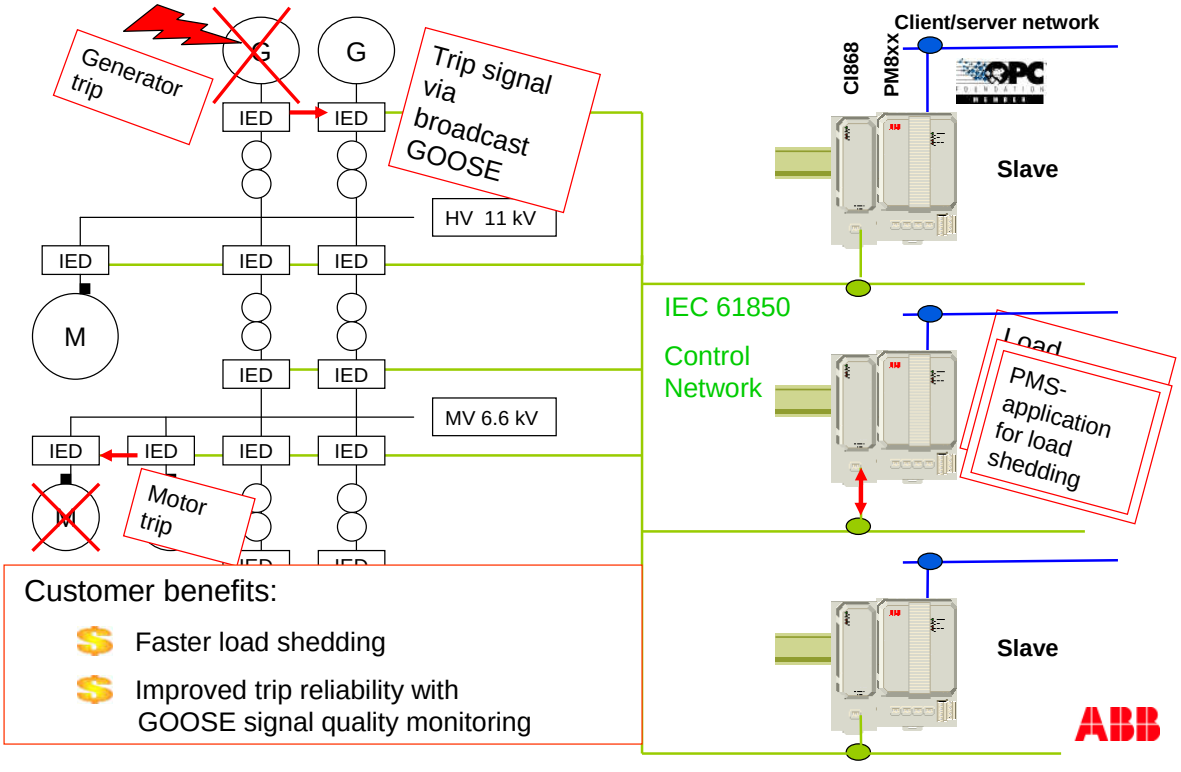

Customer benefits:

- Faster load shedding
- Improved trip reliability with GOOSE signal quality monitoring

Outline

- IEC61850 standard
- Integration with System 800xA
- Value Propositions
  - One system for Process Control and Electrical Control
  - Enhanced Asset Management possibilities
  - Improved Power Management solution
- ABB project overview
- Demo

ABB project overview
IEC61850 for System 800xA

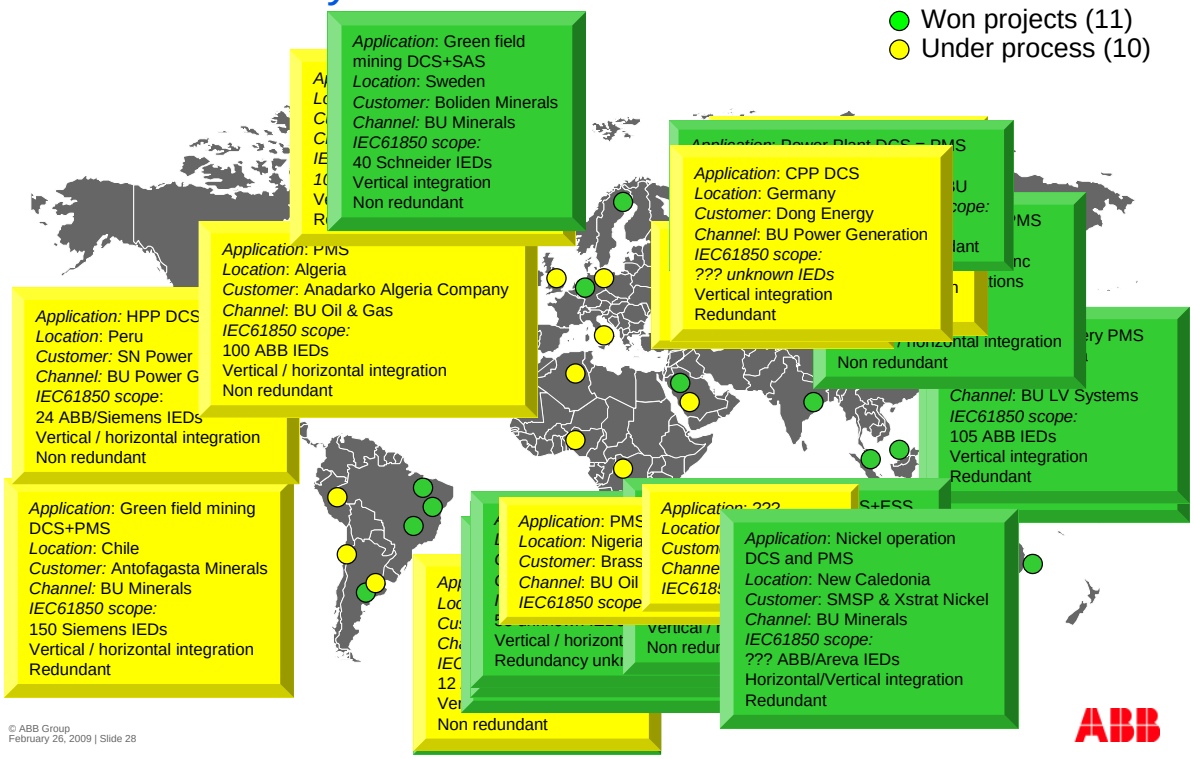

Outline

- IEC61850 standard
- Integration with System 800xA
- Value Propositions
  - One system for Process Control and Electrical Control
  - Enhanced Asset Management possibilities
  - Improved Power Management solution
- ABB project overview
- Demo

© ABB Group



Power and productivity
for a better world™