PYROGARD
Dependable Fire Alarm Systems

Innovation.
Performance.
Reliability.

Fire Alarm Control Systems for the New Millennium



MatrixMX200EN

Conventional Fire Alarm Control

- Approved to British Standards EN 54 parts 2 & 4 : 1998
- Approved to Singapore Standards CP 10 : 1993
- Compatible with both UL and EN 54 Fire Detectors
- User Friendly
- Cost Effective
- Wide Range of Options
- Power Supply meets EN 60950, UL 1012, and UL 1950 safety standards, and carry the CE mark

PYROGARD
Dependable Fire Alarm Systems
ISO 9002 Cert. No 30699

Andy Fam
Sales Engineer
Fire Alarm Division

SEALAND RESOURCES PTE LTD
BLK 30 KALLANG PLACE #06-21
SINGAPORE 339159
URL : www.pyrogard.com.sg
TEL : (65) 2914288
FAX : (65) 2968180
PG : 95822976
EMAIL : andyfam@pyrogard.com.sg

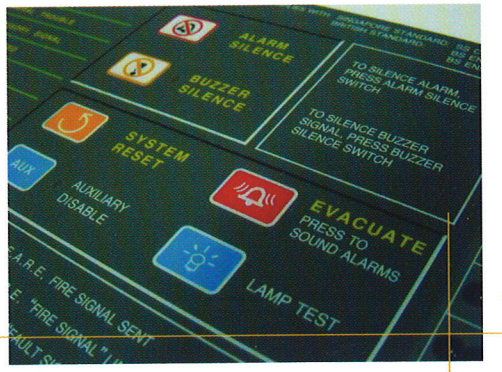

Advanced Engineering

Pyrogard Technologies has been synonymous with pioneering innovation in the fire detection industry. From the first UL listed analog addressable control pane outside the United States, to being the first fire alarm panel manufacturer to achieve ISO 9000 Quality Standards in the region.

The Matrix MX200EN continues our tradition of commitment to cost effective engineering excellence. The MX200EN is the result of extensive Research & Development as well as years of experience in the field of Fire Alarm Control Systems.

The advanced microprocessor based design allows for minimum components, low power consumption, and maximum reliability. The main control switches are color coded and have symbols for easy identification. With one of the most aesthetically pleasing and user friendly interfaces in the market today, operating the MX200EN is simplicity itself.

Proven Reliability

At Pyrogard, we don't cut corners when it comes to reliability. Lightning Surge Protection and Zinc Plated mounting board for improved earth leakage contact are all provided as standard equipment.

Our highly efficient switching power supply module operates on both 220 VAC, as well as 110 VAC, and effectively compensates for any fluctuation in Mains Voltage to provide smooth and dependable power output. This high efficiency generates far less heat which translates into greatly reduced component wear and tear, and vastly improved long term trouble free operation.

The modular design of the MX200EN offers easy maintenance and minimum down time. In the unlikely event of a fault, specific Trouble LEDs indicate the source of the problem for quick and cost effective trouble shooting. Only the affected module needs to be replaced.

Pyrogard Fire Detection systems have been proven in some of the harshest conditions in the Middle East and across Asia. Our systems protect Commercial, Industrial, Petrochemical, Power Generation, Military, and Residential facilities. With a full range of detection and indicating devices, Pyrogard has a solution to meet virtually all your needs.



A full range of Conventional and Hazardous Area
Smoke, Heat, Duct, and Beam Detectors

Alarm Bells, Sounders, and Strobes

Indoor, Weatherproof, and Hazardous Area
Manual Call Points



Unmatched Flexibility

The Individual Zone selectable Alarm Verification Feature (AVF) is among an extensive range of standard features provided at no extra cost. In addition, Pyrogard offers a host of options to tailor the MX200EN fire detection system to meet your specific needs:

- Programmable Zone Driven 24 VDC Bell/Sounder Outputs
- Programmable Zone Driven NO/NC Dry Contact Relay Outputs
- Programmable LED Drivers for Mimic and Repeater Panels
- Status Monitoring for Auxiliary Equipment
- Fireman Intercom Circuit and Call Lamp (Japanese standard)
- Voltmeter and Ammeter
- Fire Alarm Routing Equipment (DECAM) circuit monitoring
- Dual Supervised Power Supply circuits for Sub-panels (from Main panel) with automatic switch over in the event of a circuit fault

Auxiliary Panels

MX200EN-GR Extinguishing Gas Release Control Panel

The MX200EN-GR Extinguishing Gas Release Control Panel is designed for use with gas extinguishing systems like FM200, Argon, FE13, and CO_2 and comes complete with:

- Cross Zone Detection
- Alarm Signaling and Gas Release Sequence in accordance with NFPA 72 and NFPA 2001
- 2 digit Countdown Timer Display
- Timer delay adjustable between 0 and 120 seconds
- Simultaneous illumination of "Gas Discharged" Warning Sign
- Separate input for "Abort" and "Manual Release" signals
- Status indication for Pressure Switch

MX200EN-GR

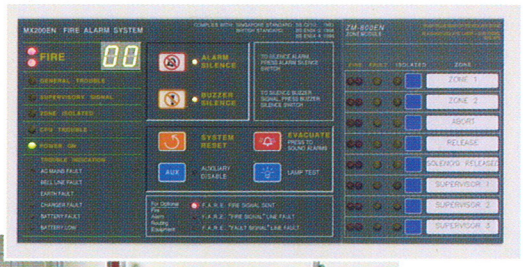



Radius RX3 LED Repeater Panel

The RX3 Repeater Panel is designed to work seamlessly with the MX200EN Fire Alarm Control Panel. Each Zone will repeat Fire Alarm as well as Fault indication from the Main Panel. The RX3 has its own independent Buzzer Silence and Lamp Test switches and is ideally suited for remote installation where indication is also required, e.g. guard room. The RX3 can operate with power supplied from the Main panel and does not require an additional power supply unit.



Radius RX3



Globally Recognized

Pyrogard Fire Detection Systems are recognized and installed in the following countries:

- Singapore
- Thailand
- Indonesia
- Japan
- Pakistan
- Maldives
- Qatar
- Jordan
- Malaysia
- Philippines
- Myanmar
- India
- Sri Lanka
- Oman
- Saudi Arabia

Dependable Support

Pyrogard Systems are supported by a qualified team of engineers and technicians. Product familiarization and training courses are constantly conducted for authorized distributors and customers to ensure that installed systems provide optimum performance.

Pyrogard also offers service and maintenance programs giving you peace of mind that your investment continues to serve you reliably in the years to come.



MX200EN SPECIFICATIONS

SYSTEM

Capacity	:	Expandable in increments of 8 Zones
Main LED Indication	:	Fire, General Trouble, Supervisory Signal, Zone Isolated, CPU Trouble, Power On
Trouble LED Indication	:	AC Mains Fault, Bell Line Fault, Earth Fault, Charger Fault, Battery Fault, Battery Low
Internal LED Indication	:	Bell Line Open, Bell Line Short, Bell Fuse Blown, Power Line to Sub-panel Fault (auto switch over to back-up circuit)
Operational Temp Range	:	-5°C ~ +45°C
Operating Environment	:	Max. 95% RH Non-condensing

POWER SUPPLY

AC Mains Input	:	110 VAC ± 10% or 220 VAC ± 10% @ 50/60 Hz
DC Output	:	5.2 A @ 29 VDC

BATTERY CHARGER

Charger Voltage	:	28.8 VDC
Max. Charge Current	:	1.71 A (Fast Charge) 100 mA (Float Charge) 50 mA (Trickle Charge)

SYSTEMS OUTPUT

Bell Output	:	2 x 1.25 A @ 28 VDC each, 2 A total
NO/NC Relay Contacts	:	2 x 5 A with Disable Facility 1 x 250 VAC @ 6 A for Alarm 1 x 250 VAC @ 6 A for Fault

SYSTEM CURRENT REQUIREMENTS (Typical)

8 Zone	61 mA
16 Zone	97 mA
32 Zone	169 mA
56 Zone	277 mA
80 Zone	385 mA

PYROGARD

Pyrogard Technologies Pte Ltd
Blk 30 Kallang Place #06-21, Singapore 339159
Tel: (65) 6291 4288 Fax: (65) 6296 8180
Email: sales@pyrogard.com.sg
Website: http://www.pyrogard.com.sg

Certified to ISO 9000 Quality Standards

ISO 9002

Cert. No. 30669

Authorized Distributor

As Pyrogard is constantly improving its products, specifications are subject to change without prior notice.

CERTIFICATE OF CONFORMITY

PSB Corporation

PSB Product Listing Scheme*: **Class 1A**

This Certificate is issued to

Sealand Resources Pte Ltd
Blk 30 Kallang Place #06-21
Singapore 339195

FOR

Product:	Fire Alarm Panel
Brand:	Pyrogard
Model:	MX200EN
Country of Origin:	Singapore
Product Details:	Conventional 1 To 80 Zones Of Fire Alarm Panel Complete With Simulators (Break Glass, Alarm Bell, Smoke & Heat Detectors)

which has complied with the requirements of the scheme and based on the following:

Standard(s)	Test Report(s)
BS EN 54-2 : 1998	55S00139/A/GT/YCI
BS EN54-4 : 1998	55S00139/B/GT/YCI
SS CP 10 : 1993	EMC/R/02282

Henry Heng
Chief Executive Officer

Certificate No:	Date of Original Issue:	Date of Last Revision:	Date of Expiry:
021042	30/11/1998	22/02/2002	28/02/2005

PSB TEST®

*** All products listed under Class 1A/1B must have this mark affixed/printed on them. Failure to comply with this requirement may result in revocation of this certificate**

This Certificate is part of a full report and should be read in conjunction with it. This Certificate remains the property of PSB Corporation Pte Ltd and shall be returned upon request. The use of this Certificate is subjected to the terms and conditions of the Product Listing Scheme. The manufacturer is solely responsible for compliance of any product that has the same designation as the product type-tested.

NOTE: Persons relying on this Certificate should verify its validity by checking PSB Corporation's website at www.psbtest.com.sg

HOUSING & DEVELOPMENT BOARD

Your Ref :

Our Ref : 250-20-03-0061

Date : 9 Apr 2002

TEL(DID) : 62797859
FAX : 62797914

Mr Nicholas Chong
Sealand Resources Pte Ltd
Blk 30 Kallang Place
#00-21
Singapore 339159

Dear Sir

APPROVAL OF PYROGARD MX200EN CONVENTIONAL 1 TO 80 ZONES OF MICROPROCESSOR-BASED FIRE ALARM PANEL (PSB PRODUCT LISTING SCHEME: CLASS 1A)

Please refer to your application dated 11 Mar 2002 through HDBuilders.com, attached with the PSB Corporation Test Reports: 55S00139/A/GT/YCI, 55S00139/B/GT/YCI, EMC/R/02282 and 55S02748/TCS/YCI, requesting for the approval for the above material.

2 We have no objection to the use of the above material in HDB's projects.

3 This approval is valid until 28 Feb 2005. However, the approval may be withdrawn if the above material fails to meet our future requirements.

4 You are advised to renew this approval before the expiry date, otherwise approval will be withdrawn after the expiry date.

Yours faithfully

HO FUI CHAN
SENIOR PRINCIPAL ELECTRICAL ENGINEER
for CHIEF ELECT & MECH ENGR
BUILDING & DEVELOPMENT DIVISION
HOUSING & DEVELOPMENT BOARD

PYROGARD.DOC/LSE/zs/D11

3451 JALAN BUKIT MERAH HDB CENTRE SINGAPORE 159459 TEL: 2739090
• Email address : hdbmailbox@hdb.gov.sg • HDB InfoWEB : http://www.hdb.gov.sg

SINGAPORE QUALITY AWARD for business excellence
1997 Winner

Conventional Fire Alarm Control Panel



ENGINEERING SPECIFICATIONS

For Compliance to :

British Standards EN 54 Parts 2 and 4 : 1998

Singapore Standards CP 10 : 1993

ISO 9002

PYROGARD

Dependable Fire Alarm Systems

1.0 General Description

The fire detection and alarm system shall comprise of a Conventional Control Panel, connected to detection and annunciation devices, located throughout the area specified for protection.

The control panel shall continuously monitor the detection devices and initiate action when a fire or smoke condition is present. The control panel shall have a front panel consisting of L.E.D. indicators, and control keypads. The occurrence of a fire or trouble shall be instantly indicated.

The control panel shall be designed to and manufactured under the following standards :

a) Singapore Standards CP 10 : 1993

b) British Standards EN 54 Parts 2 and 4 : 1998

c) ISO 9002 Quality Standards

Control panels manufactured without a recognised quality system shall not be accepted.

In addition, the control panel's power supply shall be tested to the following safety standards :

d) IEC/EN 60950

e) UL 1012

f) UL 1950

g) CE Mark

2.0 System Operation

The system shall be designed to be used with minimum operator training. Basic fire alarm functions shall be completely self explanatory and shall be easily understood. Main Control Switches shall be identified by a symbol describing its function.

The operation and silencing of any alarm or trouble signal, or any keyboard operation shall not inhibit or delay the receipt of additional alarms. Should any zone be isolated or disabled for maintenance, the abnormal status shall be indicated by an L.E.D. indicator, with an audible warning.

3.0 Operating Programs

The control panel shall be a microprocessor based system. Operating programs shall be stored in non-volatile read-only memories. The programs shall provide all start up abilities to run the system without manual intervention. In the event of a software failure, a monitoring circuit shall automatically reset the system.

3.1 Processor Monitoring

A hardware "watchdog" circuit shall be provided on the central processor module. In the event of a microprocessor failure, the watchdog circuit must automatically reset the microprocessor. If the reset is unsuccessful, there shall be an LED to indicate a CPU trouble.

4.0 System Architecture

The control panel shall be modular and consist of a CPU Module, Zone Indicating Modules, an Output Module, and a Power Supply Module. The modules shall be easily replaced on site for trouble shooting or maintenance to minimize operational downtime.

4.1 CPU Module

The CPU Module shall consist of the main controls and secondary controls.

The main controls shall include the following :

a) Alarm Silence switch

b) Buzzer Silence switch

c) System Reset switch marked in Orange

d) Emergency Evacuation switch with a Bell Symbol marked in Red.

The secondary controls shall be marked in Blue and include :

a) Lamp Test switch

b) Auxiliary Relay Disable switch

In the even of a Trouble Signal, a General Trouble LED shall be lit and an individual LED shall be provided to indicate the specific fault as follows :

a) AC Mains Fault

b) Bell Line Fault (see below)

c) Earth Fault

d) Charger Fault

e) Battery Fault (Disconnected, Reversed, or Damaged)

f) Battery Low

g) Zone Fault (Open or Short Circuit)

h) CPU Trouble

In addition, the control panel shall be able to separately indicate the following information at access level 2 :

i) Bell Line Open

j) Bell Line Short

k) Bell Fuse Blown

4.2 Zone Indicating Module

Each Zone Indicating Module shall have 8 Detection Zones. There shall be separate LED indicators for each Zone to indicate Fire, Fault, or Isolation.

Two Red LEDs shall be used for Fire Indication. An Amber LED shall be used for Open Circuit and/or Short Circuit in the Detection Circuit wiring. A separate Amber LED shall be used to indicate an Isolated Zone. A disabled Zone shall also be indicated via an audible signal. Each Zone shall be Isolated using an independent Isolate Switch marked in Blue.

4.3 Output Module

The Output Module shall control 24VDC and Relay Outputs to external devices. The Output Module shall also house the battery charger circuit. The Module shall have the following minimum outputs :

a) 2 x 24VDC Supervised Bell Circuits @ 1.25A (2A total output)

b) 1 x NO/NC Dry Contact Relay for Alarm signal

c) 1 x NO/NC Dry Contact Relay for Fault signal

d) 2 x NO/NC Dry Contact Relay for Alarm signal which can be isolated for testing and maintenance

4.4 Power Supply Module

The Power Supply shall employ switching technology to reduce power loss, operate at a low working temperature, and maximise efficiency. The Power Supply shall meet IEC/EN 60950, UL 1012, and UL 1950 safety standards, and carry the CE mark.

The Power Supply module shall have a metal casing to protect users and installers from coming into contact with high voltage components. High temperature transformers with exposed terminals shall not be accepted.

4.5 Fire Alarm Routing Equipment Monitoring

The Control Panel shall have indications to monitor signals sent to Fire Alarm Routing Equipment and shall be marked as such as required by BS EN 54. The indications may be abbreviated to "F.A.R.E." and shall include the following :

a) F.A.R.E. Fire Signal Sent

b) F.A.R.E. "Fire Signal" Line Fault

c) F.A.R.E. "Fault Signal" Line Fault

5.0 Operation

5.1 Alarm Silencing

In the event of an alarm, the 24VDC Bell circuits shall be cut off using the Alarm Silence switch. The silencing of alarm shall not inhibit or delay re-energising of the Bell circuits for subsequent alarms.

Silencing of the alarms shall not silence the alarm buzzer. The alarm buzzer shall be acknowledged separately with the Buzzer Silence switch. A common switch for alarm and buzzer silence shall not be accepted.

5.2 Alarm Verification Feature (AVF)

The control panel shall incorporate an Alarm Verification Feature to reduce unwanted false alarms. This feature shall be selected using jumper settings on existing circuitry, No additional circuit boards or modules shall be required. When selected, this function shall provide a 2 stage delay.

The first stage delay shall be selectable from 0 to 20 seconds. Any alarm received during this period will be recorded by the control panel. After the duration of the delay, the control panel shall reset itself and move on to the second stage of delay.

The second stage delay shall be selectable from 0 to 300 seconds. If an alarm signal is received from the same zone as in stage 1, the alarm will be confirmed and the control panel shall activate the bell outputs.

Should there be no additional alarm signal from the same zone after the stage 2 delay, the panel will reset itself again and record the first alarm signal as a false alarm.

The AVF shall be user selectable and used on Zones connected to detectors. Zones which are connected to Manual Call Points shall not employ the AVF. Control panels which require additional circuits for the Alarm Verification function shall not be accepted.

5.3 Supervisory Monitoring

The control panel shall provide circuits for monitoring of auxiliary equipment like pumps, water tank levels, e.t.c.

Activation of these auxiliary equipment shall be indicated with a Main "Supervisory Signal" LED which is distinct from the Fire or General Trouble LEDs. Control panels which use the General Trouble LED for this function shall not be accepted.

5.4 Annunciation

Fire and Trouble signals shall be indicated visually and audibly on the control panel. The indications shall be clearly distinguished from one another.

Visual indication for a Fire signal shall be in the form of 2 Main Red LEDs to distinguish it from other signals. Fire indication with1 Main LED only shall not be accepted. The internal audible signal shall be a buzzer and may be the same for all alarms.

There shall be 2 output circuits for audible (Bell) signals. These outputs shall provide a minimum of 1.25A at 24 VDC each.

6.0 Surge Protection

The panel shall incorporate surge protection for each individual zone circuit to minimise damage from lightning and other electrical surges in the environment. Protection shall be able to absorb a minimum energy level of 9.5 Joules. Control Panels without protection shall not be accepted.

7.0 Gas Release Control (optional)

The control panel configuration for gas release operation shall be in accordance with NFPA 72 and the NFPA 2001 code. The control panel shall be fitted with a user selectable countdown timer.

Two Zones shall be used for the fire detection and operation of the gas release system. Zone 1 and Zone 2 shall be "cross zoned" whereby an alarm signal from one Zone will initiate a pre-alarm only. When both Zones receive an alarm signal, the pre-alarm shall stop, and the Alarm Bell shall sound intermittently, and the gas release countdown timer begin. The panel shall have a 2-digit countdown timer display on the front and it shall indicate the time remaining before the release of gas.

An "Abort" switch input shall be provided at the control panel. During the countdown, the Abort switch shall be used to stop and hold the countdown. The countdown shall continue when the Abort switch is released. Gas Release Control Panels without this function as required by NFPA 72 and NFPA 2001, shall not be accepted.

The countdown shall stop completely when the control panel's "Reset" button is pressed. If the countdown has not been stopped and continues till zero, the Alarm Bell shall now sound continuously, the gas shall be released, and a "Gas Discharged" warning sign shall be lit outside the protected room.

The control panel shall provide two Auxiliary NO/NC Relay Contacts to activate the closing of Air Dampers and/or shutting down of Air Handling Units which affect the protected room.

8.0 Heat Detectors

The heat detectors shall be a combination of Fixed Temperature (135°F) and Rate of Rise, Conventional type. The detector shall employ a thermistor as a means of temperature detection.

The detector shall be approved by Loss Prevention Council (LPC) and shall be resetable from the control panel. A detector in alarm shall be indicated by twin steady LEDs to enable 360° viewing. The detector shall be manufactured under at least ISO 9002 quality standards.

9.0 Smoke Detectors

The smoke detectors employed shall be of Photoelectric type. The detector shall be approved by the Loss Prevention Council (LPC) and resetable from the control panel.

The design and electronics of the detector shall be sensitive to any velocity and air flow conditions. A detector in alarm shall be indicated by twin steady LEDs to enable 360° viewing. The detector shall be manufactured under at least ISO 9002 quality standards.

10.0 Detector Base

The detector base shall be common for both Smoke and Heat detectors. The base shall incorporate a twist and lock design to secure the detector heads. This design shall allow easy removal of the detector head for maintenance. There shall be no electronic components on the base. In addition, there shall be a mechanism to allow mechanical locking of a detector to prevent unauthorised removal or tampering.

11.0 Manual Call Points

The Manual Call Point shall be of break glass type and activated when the glass is broken. The glass shall be laminated so as to eliminate injury due to broken glass. A hammer shall not be required.

The Manual Call Point shall be easily tested via a temporary means by without breaking the glass. The Manual Call Point shall have a built-in resistor to enable the control panel to distinguish a short circuit from an alarm.

12.0 Alarm Bell

The Alarm Bell shall be 6 inch in diameter, motor driven type. The sound level from the bell shall be not less than 97 dBA at 1 meter.

The current consumption shall be kept low and shall not exceed 25mA @ 24 VDC.

A polarised circuit shall be employed to provide line supervision and the motor shall be designed with back EMF suppression.

CONVENTIONAL
FIRE ALARM CONTROL SYSTEM

PYROGARD TECHNOLOGIES

MX200EN

Part No. : MAN-200E-100 Rev. A

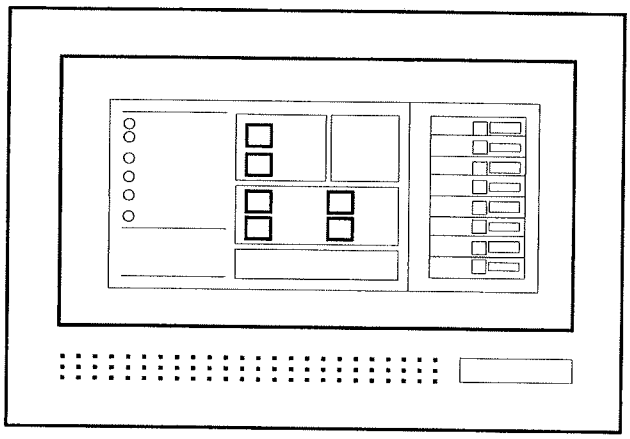

Tested and Approved To :

SINGAPORE STANDARD :	SSCP10 :	1993
BRITISH STANDARD :	BS EN54-2 :	1998
	BS EN54-4 :	1998

OPERATING & INSTALLATION INSTRUCTIONS

ISO 9002

PYROGARD
Dependable Fire Alarm Systems

MATRIX MX200EN

CONVENTIONAL FIRE DETECTION AND ALARM CONTROL SYSTEM

OPERATING AND INSTALLATION INSTRUCTIONS

©2001
PYROGARD TECHNOLOGIES PTE LTD
BLK 30 KALLANG PLACE #06-21
SINGAPORE 339159

While every precaution was taken during the preparation of this manual to ensure the accuracy of its contents, Pyrogard assumes no responsibility for errors or omissions. Features described in this manual are subject to change without notice.

1st Edition, Dec 2001

Certified to ISO 9002 Quality Standards

1.0 BASIC OPERATION

1.1 ALARM MODE

The Alarm will operate when the following occurs :

1. a smoke detector is activated
2. a heat detector is activated
3. a manual call point or flow switch is operated

The dual red "FIRE" LED will light up (Fig. 1), the panel buzzer will sound, the bell/sounder outputs will be energized, and the alarm LED at the specific Zone will be lit.

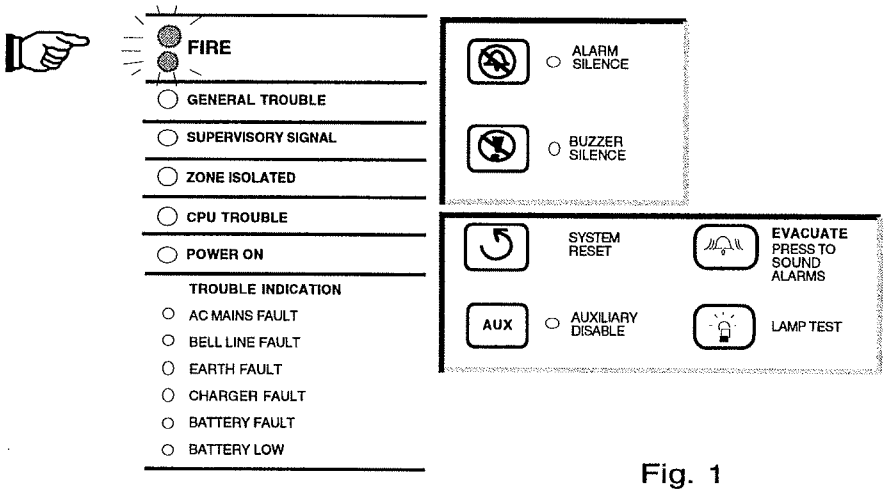

Fig. 1

The alarm will also activate the Auxiliary NO/NC Relay Contacts which can be isolated by pressing the Auxiliary Disable switch.

TO ACKNOWLEDGE & SILENCE ALARM BUZZER



- Open the Cabinet Front Door with Access Key
- Press the < BUZZER SILENCE > switch.

  The "BUZZER SILENCED" LED will be lit.

NOTE : ALARM BELLS MUST BE SILENCED INDEPENDENTLY BY THE ALARM SILENCE SWITCH!

If the panel receives a new Alarm signal after Acknowledgement, the Buzzer will re-sound, the "FIRE" LED will stay lit, and the alarm LED at the new Zone will be lit. If the Alarm condition is still present after the System Reset switch is pressed, the Buzzer will re-sound.

TO SILENCE ALARM BELLS/SOUNDERS



- Press the < ALARM SILENCE > switch.

  The "ALARM SILENCED" LED will be lit.

- Once the cause of the Alarm has been attended to, press the < SYSTEM RESET > switch.

If the panel receives a new Alarm signal during Alarm Silence, the Alarm will re-sound, the "FIRE" LED will stay lit, and the alarm LED at the new Zone will be lit. If the Alarm condition is still present after the System Reset switch is pressed, the Alarm will re-sound.

1.2 ALARM VERIFICATION (optional)

Each Zone can be individually set for an Alarm Verification feature in accordance with the Singapore Standard CP 10 : 1993. When this feature is selected, and an alarm signal is received, there will be an initial delay (retard period) of between 0 to 20 seconds. After this delay, the panel will automatically be reset and go into a second delay (confirmation period) of between 0 to 300 seconds.

Should the alarm occur in the same zone again, the panel will then go into alarm and sound the bells. The panel will then operate as per Section 1.1.

If there is no alarm signal in the same zone after the second delay, the panel will automatically reset itself and increase the digital counter by 1.

The Alarm Verification Function shall be used for Smoke, Beam, and Heat detector connection only. Zones connected with Manual Call Points must not be set in Alarm Verification mode.

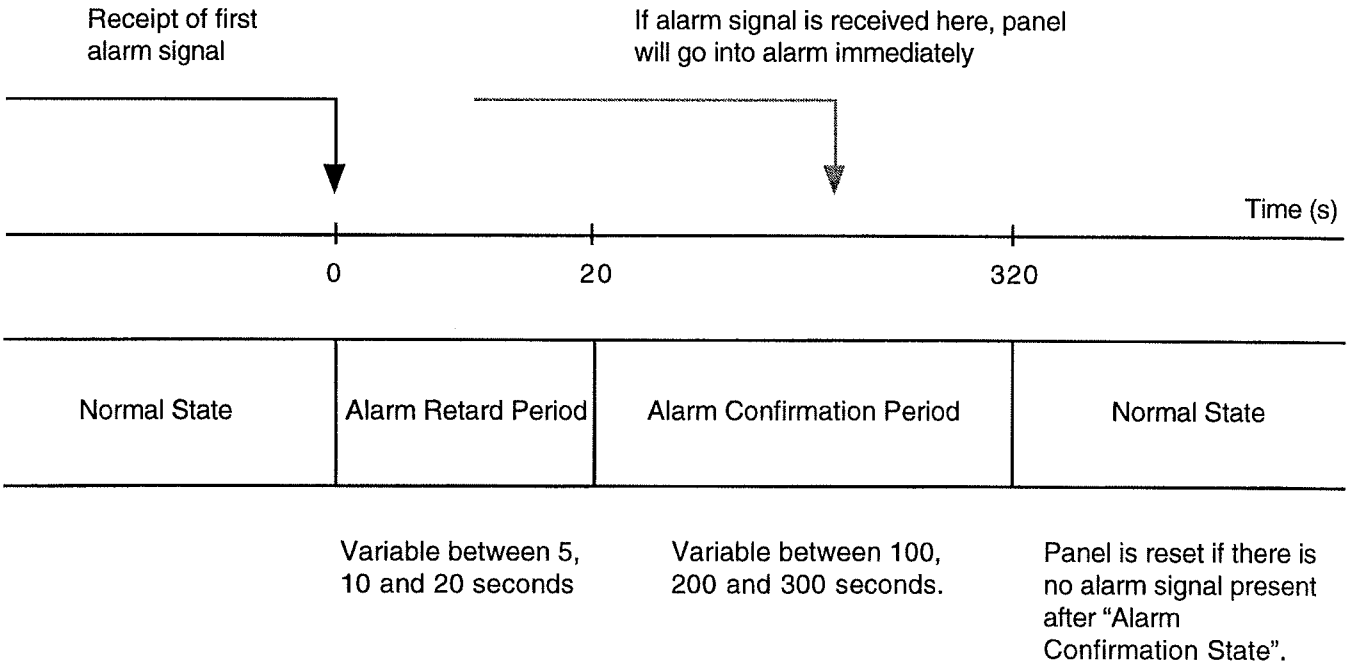

1.3 GENERAL TROUBLE MODE

The panel signal buzzer will sound and a "General Trouble" LED will be lit when the following occurs:

1. Detector fault
2. Zone wiring Short Circuit
3. Zone wiring Open Circuit
4. Internal electronics fault
5. AC Mains fault
6. Ground/Earth leakage
7. Battery fault or disconnected
8. CPU Trouble
9. Battery Low
10. Bell/Sounder Output wiring Short Circuit
11. Bell/Sounder Output wiring Open Circuit

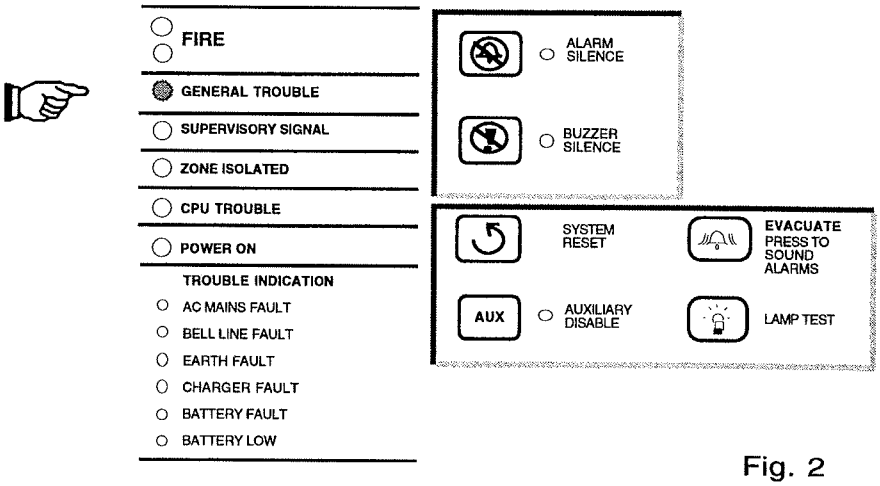

Fig. 2

TO SILENCE TROUBLE SIGNAL



- Open the Cabinet Front Door with Access Key
- Press the < BUZZER SILENCE > switch.

  The LED next to the Buzzer Silence switch will be lit.
- Once the cause of the fault has been attended to, the Trouble Signal will automatically turn off.

The panel cannot be reset if the fault condition remains.

If a new Trouble signal is received by the panel after the Buzzer is silenced, the General Trouble signal will sound again.

AC Mains failure and Battery Low will have an additional LED indication. An Alarm signal will override the Buzzer Silence switch.

1.4 ISOLATING A ZONE

A Zone may sometimes need to be isolated (disabled) for installation, maintenance, or testing purposes to prevent unnecessary activation of the Alarm.

ISOLATE ZONE — Press the Blue Switch to Isolate a Zone.

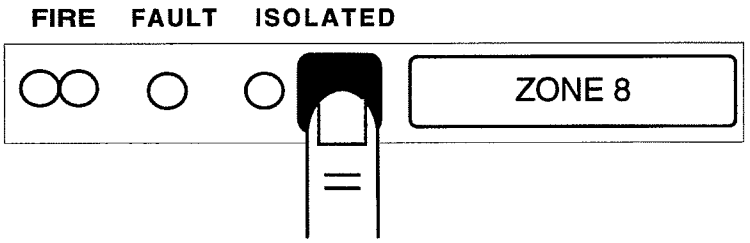

Fig.3

When a Zone is Isolated, the "ISOLATED" LED will be lit and the Buzzer will sound intermittently, indicating an abnormal condition. No Alarm or Fault signals for a Zone can be indicated when that Zone is isolated.

ENABLE ZONE — To enable the Zone, press the Blue Switch again. The Zone "ISOLATED" LED will extinguish and the Buzzer will be silenced. This will return the system to normal condition.

CAUTION : Immediately Enable a Zone once Maintenance or Testing is completed! Leaving a Zone isolated will impair the performance of the Fire Alarm System.

1.5 EVACUATE (General Alarm)

The Evacuate switch can be used to activate the Alarm in the event of an emergency. It can also be used to re-sound an Alarm after the Alarm Bells have been silenced. To silence the Alarm Bells, refer to Section 1.1 Alarm Mode.

When pressed, all fire alarm bells / sounders in the building will sound.



Fig. 4

1.6 LAMP TEST

The Lamp Test switch is used to test all LED indicators on the panel. This includes the Alarm and Fault LEDs on the Control Module, as well as the Zone Module.


LAMP TEST

Fig. 5

a. Press the "LAMP TEST" switch once.

b. All LEDs on the CPU will light up for approximately 1 second.

c. All LEDs must light up. If any LED does not light up, it is faulty and must be replaced.

1.7 OPTIONAL ACCESSORIES

1.7.1 AMMETER

The optional Ammeter displays the Battery Charging current when the Charger is on. The Ammeter is not in use when the batteries are not being charged.

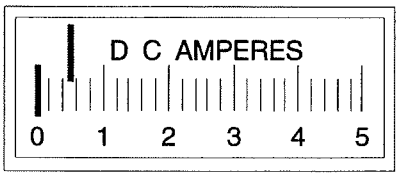

1.7.2 VOLTMETER

The optional Voltmeter displays the AC Mains voltage under normal operating condition.

The Voltmeter will display the Battery Voltage when the panel is operating on the Standby Batteries and there is an AC Mains failure.

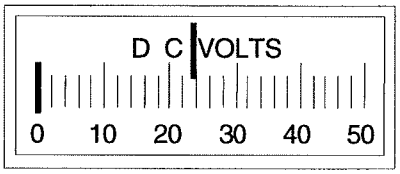

1.7.3 4-WAY RELAY OUTPUT MODULE

The 4-way Relay Output Module provides 4 individual Normally Open / Normally Closed (NO/NC) Voltage Free Relay Contacts. These can be individually controlled by a specific Zone or Zones.

1.7.4 4-WAY 24VDC OUTPUT MODULE

The 4-way 24 VDC Output Module provides 4 individually controlled 24VDC output. Each output can be controlled by a specific Zone or Zones. The 24 VDC output is typically used for Bells, Sounders, and Gas Release Solenoids.

1.7.5 8-WAY LED DRIVER

The 8-way LED driver provides 8 sets of Alarm and Fault LED driver outputs. Each set can be controlled by a specific Zone and has a separate output for Alarm and Fault.

1.7.6 FIRE ALARM ROUTING EQUIPMENT F.A.R.E. (Optional)

The optional Fire Alarm Routing Equipment display is only in use when connected to a third party remote central monitoring station (e.g. DECAM). The MX200EN has 2 outputs to the F.A.R.E. :

a) Fire Alarm signal - to alert the remote monitoring station that the system is in alarm

b) Fault Signal - to alert the remote monitoring station that there is a fault in the system (General Trouble).

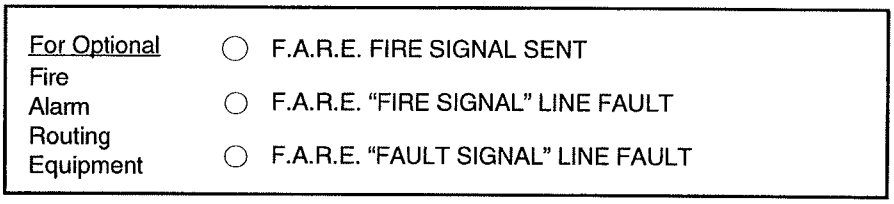

Fig. 6

1.7.6A F.A.R.E. FIRE SIGNAL SENT

This LED confirms that the an alarm signal has been sent to the Fire Alarm Routing Equipment.

1.7.6B F.A.R.E. "FIRE SIGNAL" LINE FAULT

This LED indicates that there is a fault (open or short circuit) in the fire alarm signal circuit connected to the F.A.R.E.

1.7.6C F.A.R.E. "FAULT SIGNAL" LINE FAULT

This LED indicates that there is a fault (open or short circuit) in the fault signal circuit connected to the F.A.R.E.

2.0 INSTALLATION

2.1 INSTALLATION PRECAUTIONS

Install the MX200EN panel and all supporting equipment in accordance with local standards and codes. Do not alter, modify, or change the product except as described in this manual. Other changes affect agency approvals. Careful attention should be paid to all written warnings and cautions.

WARNING :	This panel contains hazardous voltage. Disconnect power before installing or removing modules. Service should be performed by Qualified Service Technicians only.

2.2 PANEL LAYOUT

The MX200EN comprises of the CPU Module, Zones Modules, Zone Terminal Connectors, Output Module, and Power Supply (Fig. 7).

The CPU and Zones Modules are mounted on the inner door and draws power supply from the Output Module. The Output Module, Battery Charger Module, Power Supply, and Zone Terminal Connectors are mounted on the rear mounting plate for easy access.

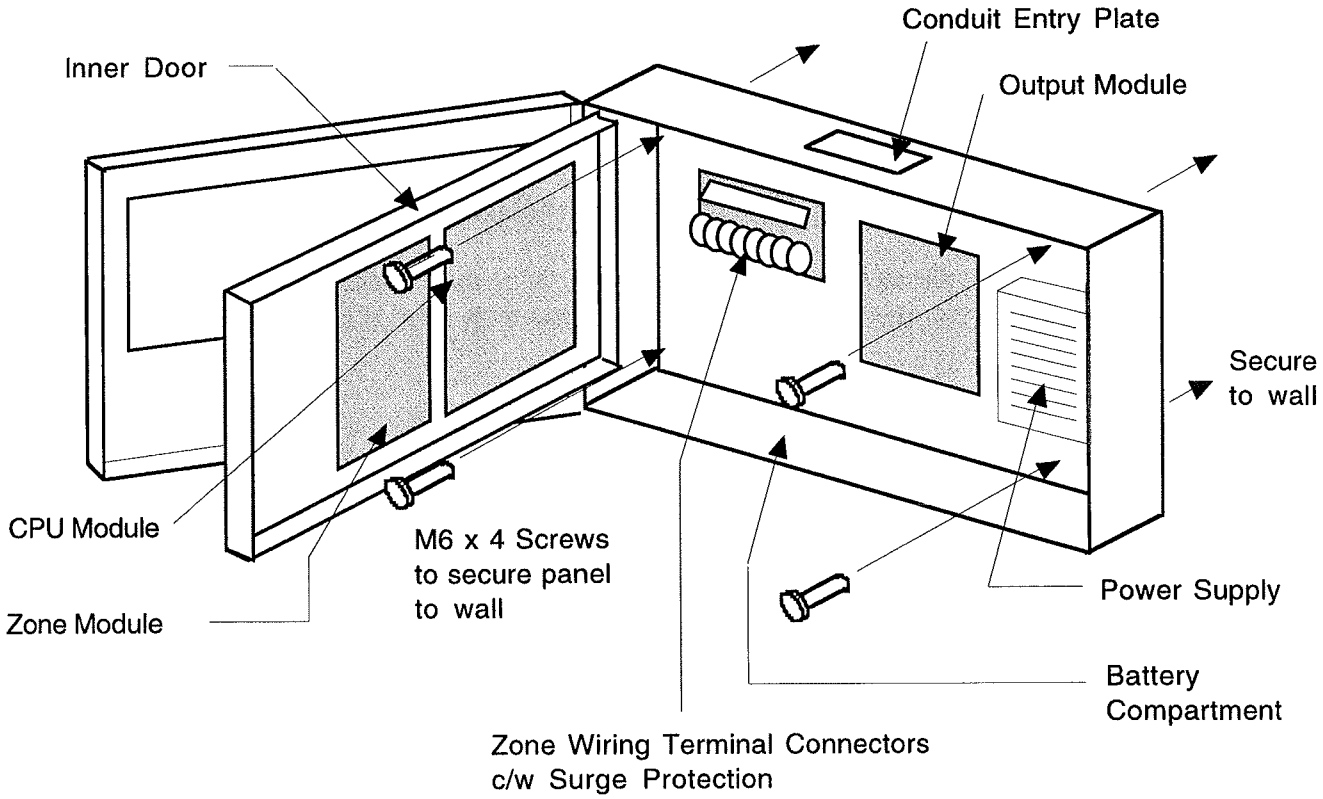

Fig. 7

Optional modules like the 4-way Relay Output Module, the 4-way 24VDC Output Module, and the 8-way LED driver, are also mounted on the rear mounting plate. This plate is Zinc Plated for improved conductivity of the Earth. Ensure that the Green Earth Cable is securely fastened to the plate.

2.3 CONNECTING A ZONE (2-wire Class B)

Zone Wiring is terminated at the Zone Wiring Terminal Module. Each Module can accommodate up to 8 Zones.

Connect the positive (+ve) wire of the zone to the "+" terminal, and the negative (-ve) wire to the "-" terminal (Fig. 8).

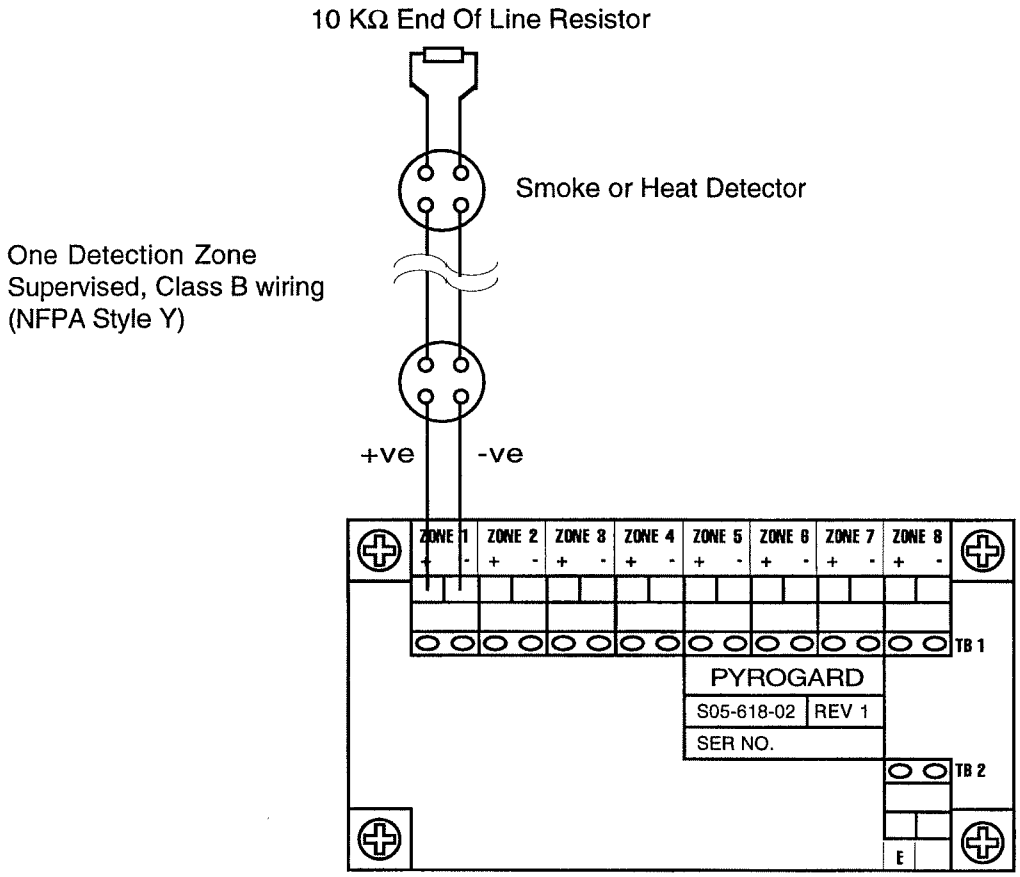

Fig. 8 Zone Wiring Terminal Connectors

The 10 kΩ End Of Line (E.O.L.) Resistor must be connected to the last Detector or Call Point in order to provide the "Open Circuit Fault" detection.

Spare Zones or Zones not in use should have the E.O.L. resistor connected to the terminal itself.

OPTIONAL 2.4 CONNECTING A ZONE (4-wire Class A)

For NFPA 72 requirements, the MX200 can also be used for 4-wire Class A connection. A break in the Zone Circuit will still allow all the Detectors or Call Points connected in that zone to operate in the event of an alarm.

Each Zone Wiring Terminal Module can accommodate 4 Zones using Class A wiring.

No E.O.L. resistor is required. Connection should be made according to Fig. 9.

Smoke or Heat Detector

One Detection Zone

Supervised, Class A wiring

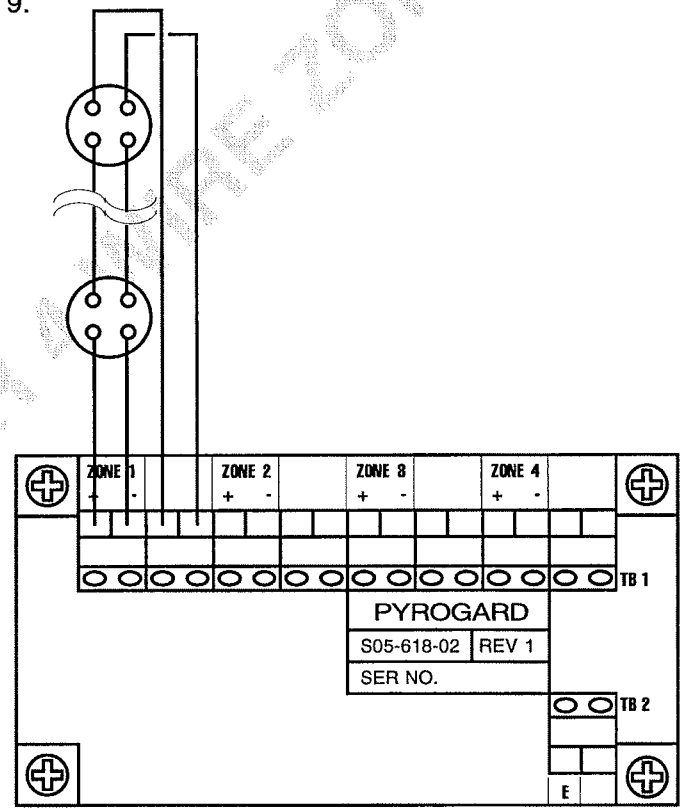

Fig. 9 Zone Wiring Terminal Connectors

NOTE : 4-wire Class A configuration must be set at the factory. If this configuration is required, it must be indicated at the time of order.

FOR 4-WIRE ZONE ONLY

2.5 CONNECTING BELL/SOUNDER CIRCUIT

The Bell/Sounder Circuits are located at the Output Module. Each Output Module has 2 x Bell/Sounder Circuits.

Each Bell/Sounder Circuit has an output rating of **1.25 A @ 28 VDC**.

WARNING :	Do not exceed the load for each circuit. The current draw for the total number of devices connected must be 2A or less.

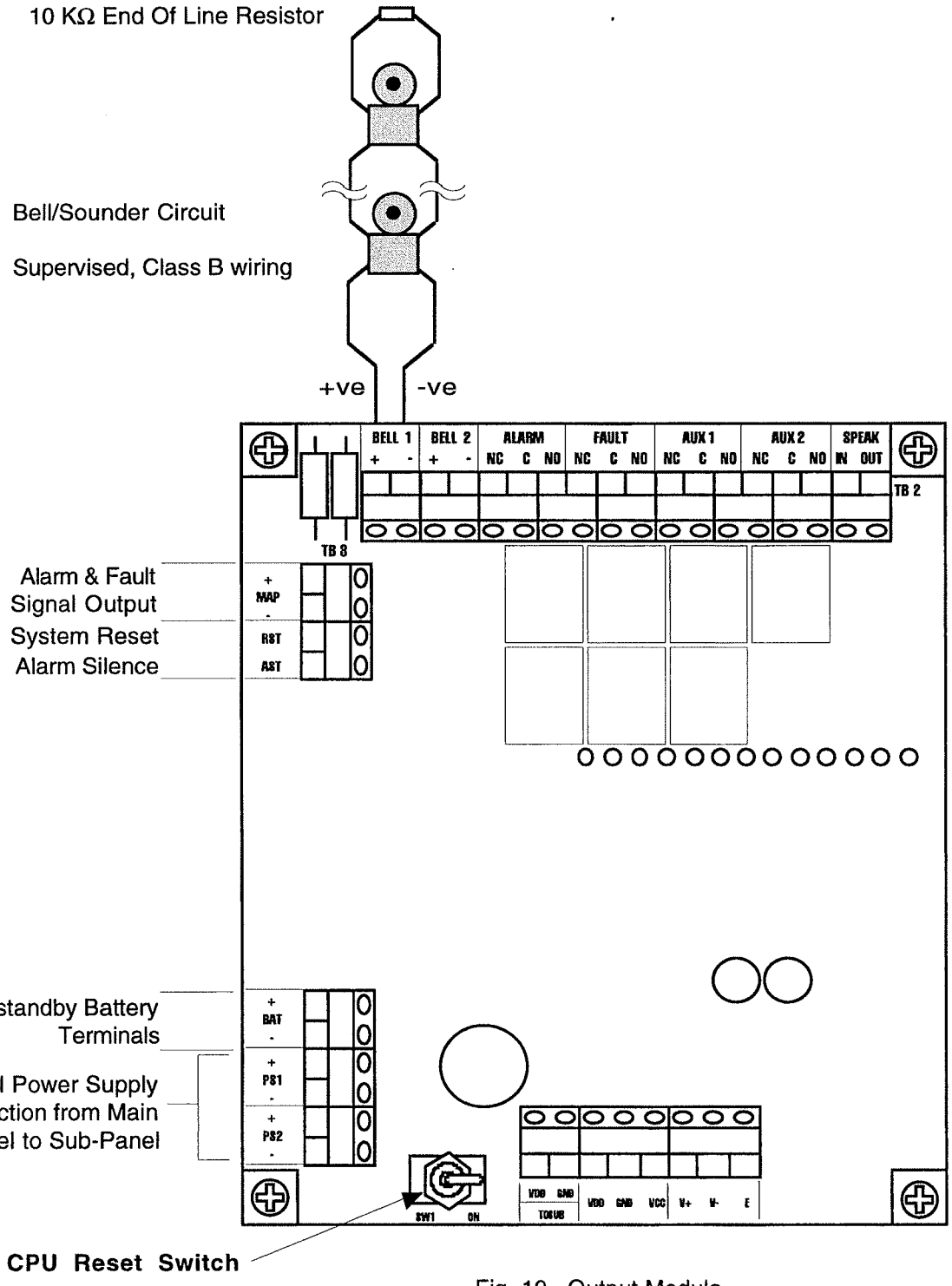

Fig. 10 Output Module

2.6 CONNECTING AUXILIARY CIRCUITS

The Output Module also provides Normally Open (NO) and Normally Closed (NC) Dry Contact Relays for connection to auxiliary equipment like Lift-homing, A.H.U. shut off, Door Release, existing fire alarm systems, e.t.c.

There is 1 circuit is for Alarm Contact and Fault Contact each. There are another 2 circuits for Auxiliary equipment mentioned above.

NOTE : The 2 circuits for Auxiliary equipment can be isolated by pressing the "AUX DISABLE" switch on the front panel. In the event of an alarm, these 2 Auxiliary contacts will not activate.

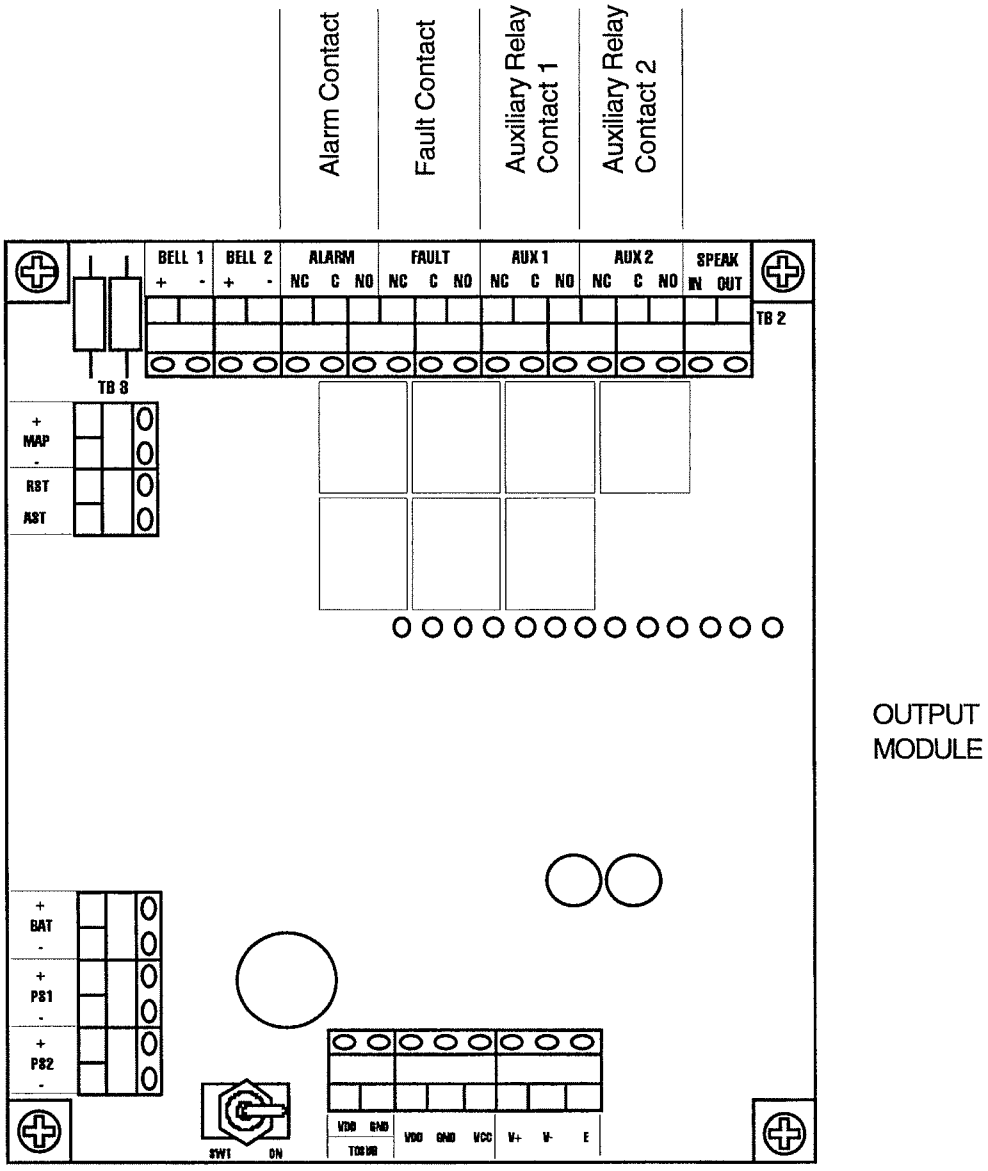

Fig. 11 Auxiliary Relay Connections

2.7 SUB-PANEL CONNECTION

When Sub-panels are required to be connected to a Main Panel, this can be accomplished in 2 ways -

Method A : Sub-panels draw power from the Main Panel. Sub-panels do not have their own Power Supplies or Standby Batteries.

Connection between Sub-panels and Main Panel require 2 wires for Power, 2 wires for Control Signals, and 1 wire for Common Bell Activation. Another 2 wires for Alarm/Fault signal have to be connected to the respective Zone at the Main Panel terminal (see Fig. 12).

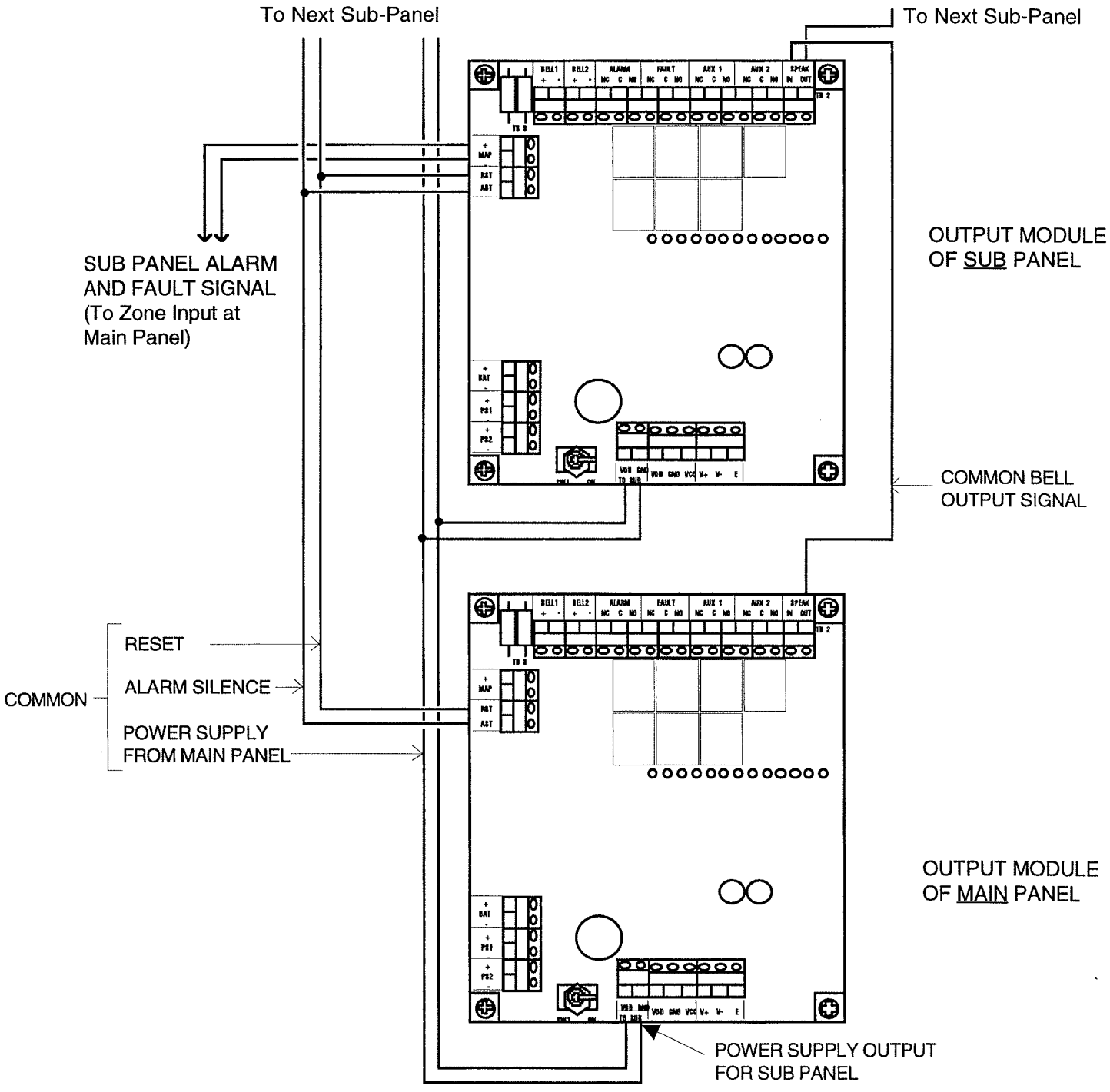

Fig. 12 Method A : Connection for Sub-panel without Power Supply

Method B : Sub-panels are stand-alone systems with independent Power Supplies and Stand-by Batteries.

Connection between Sub-panels and Main Panel require 2 wires for Control Signals, and 1 wire for Common Bell Activation. Another 2 wires for Alarm/Fault signal have to be connected to the respective Zone at the Main Panel (see Fig. 13).

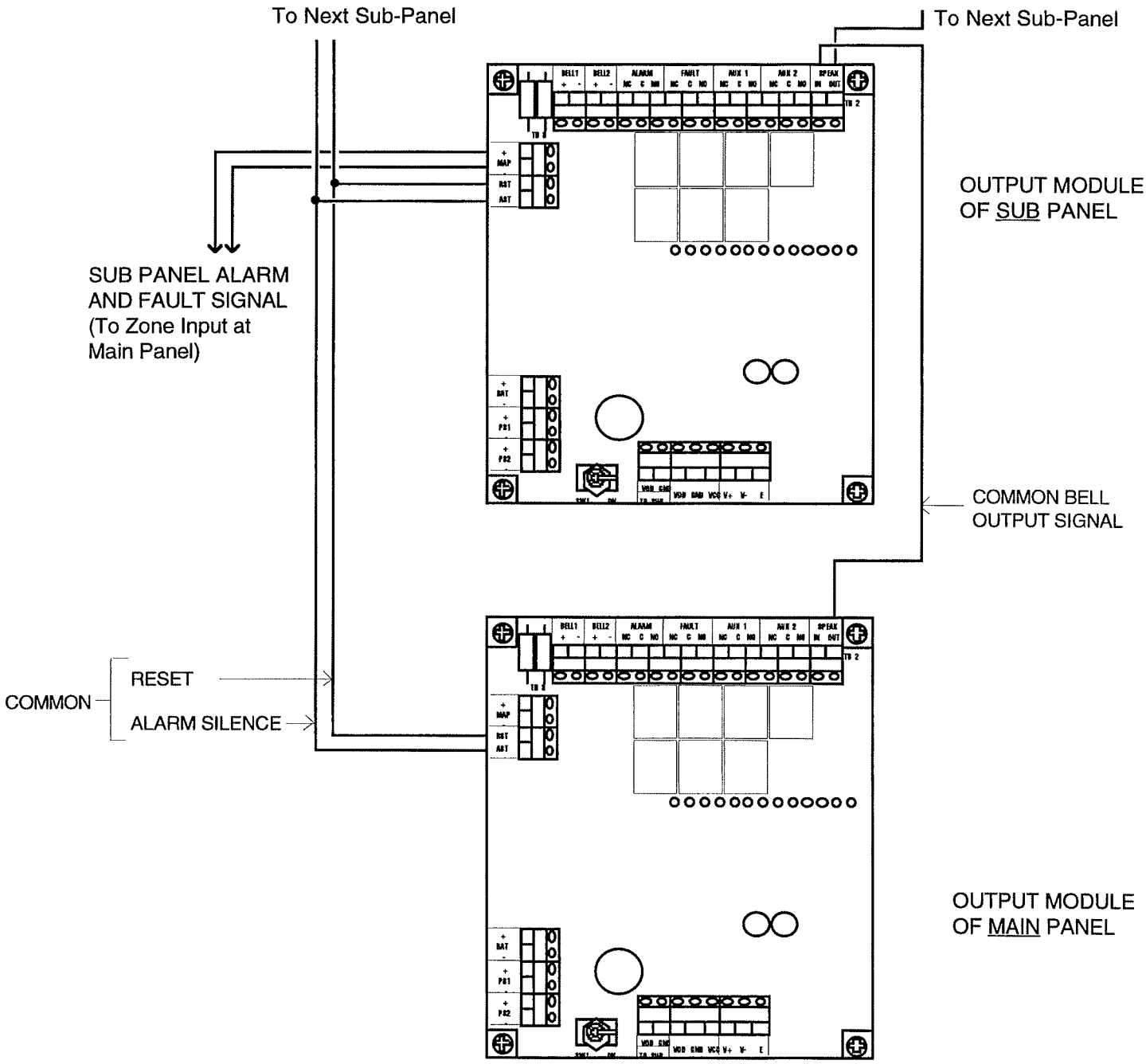

Fig. 13 Method B : Connection for Sub-panel with Power Supply

2.7 SUB-PANEL CONNECTION (cont'd)

Specifications for recommended Cable Sizes and Wiring Lengths between Sub-panel and Main Panel are as follows :

WIRE	SIZE (mm^2)	LENGTH (M)
VDD, GND (for Sub-panels without independent Power Supply units only	0.5	36
	1.0	72
	1.5	144
	2.5	180
Evacuate, Alarm Silence, and Reset	0.5	500

2.8 SUB-PANEL BELL CIRCUITS

For Common Bell activation, all Bells may be connected to the Main Panel (see Fig. 14) or all panels may be connected using the "SPEAK" terminal on the Output Module as described in Section 2.7.

For individual floor activation, Bells should be connected to their respective Sub-panels (see Fig. 15). When Bells are connected to individual Sub-panels, only the Bells connected to the Sub-panel in alarm and the Main Panel will sound. The other Bells will remain silent until the panel which they are connected to is in alarm. The "SPEAK" terminals should NOT be used when individual floor activation is required.

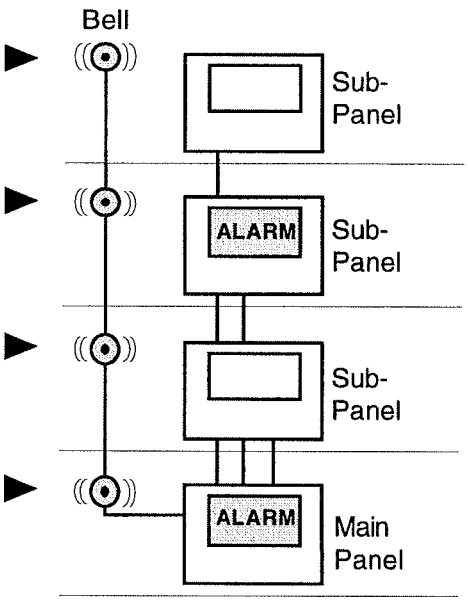

Fig. 14 Common Alarm Bell

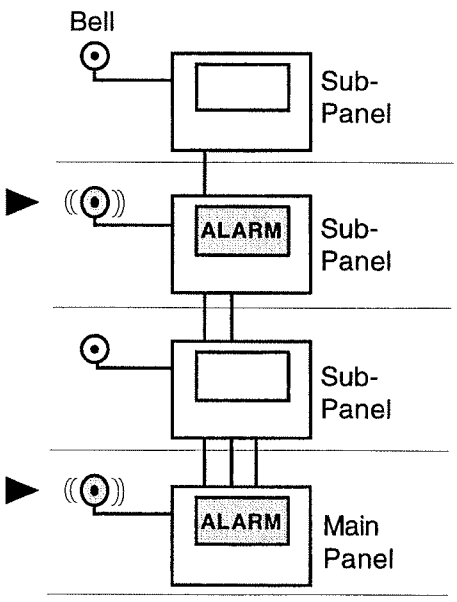

Fig. 15 Individual Alarm Bell

2.9 REPEATER / MIMIC PANEL CONNECTION (optional)

Repeater Panels and LED Mimic Panels have the same wiring connection configuration. Connection to Repeater Panels and Mimic Panels require the optional LED Output Module Card (S00-438-01) and Control Module Card (S00-618-03) to be installed in the Control Panel. Each LED Output Module Card can drive up to 8 Zone LEDs.

The LED Output Module Card shall be connected to a corresponding Terminal Connector Module (S00-618-02) in the Repeater or Mimic Panel (see Fig. 16).

Control Signals from the Control Panel's Control Module Card (S00-618-03) muct be connected to the corresponding terminals on the Control Module Card (S00-618-03) at the Repeater / Mimic Panel .

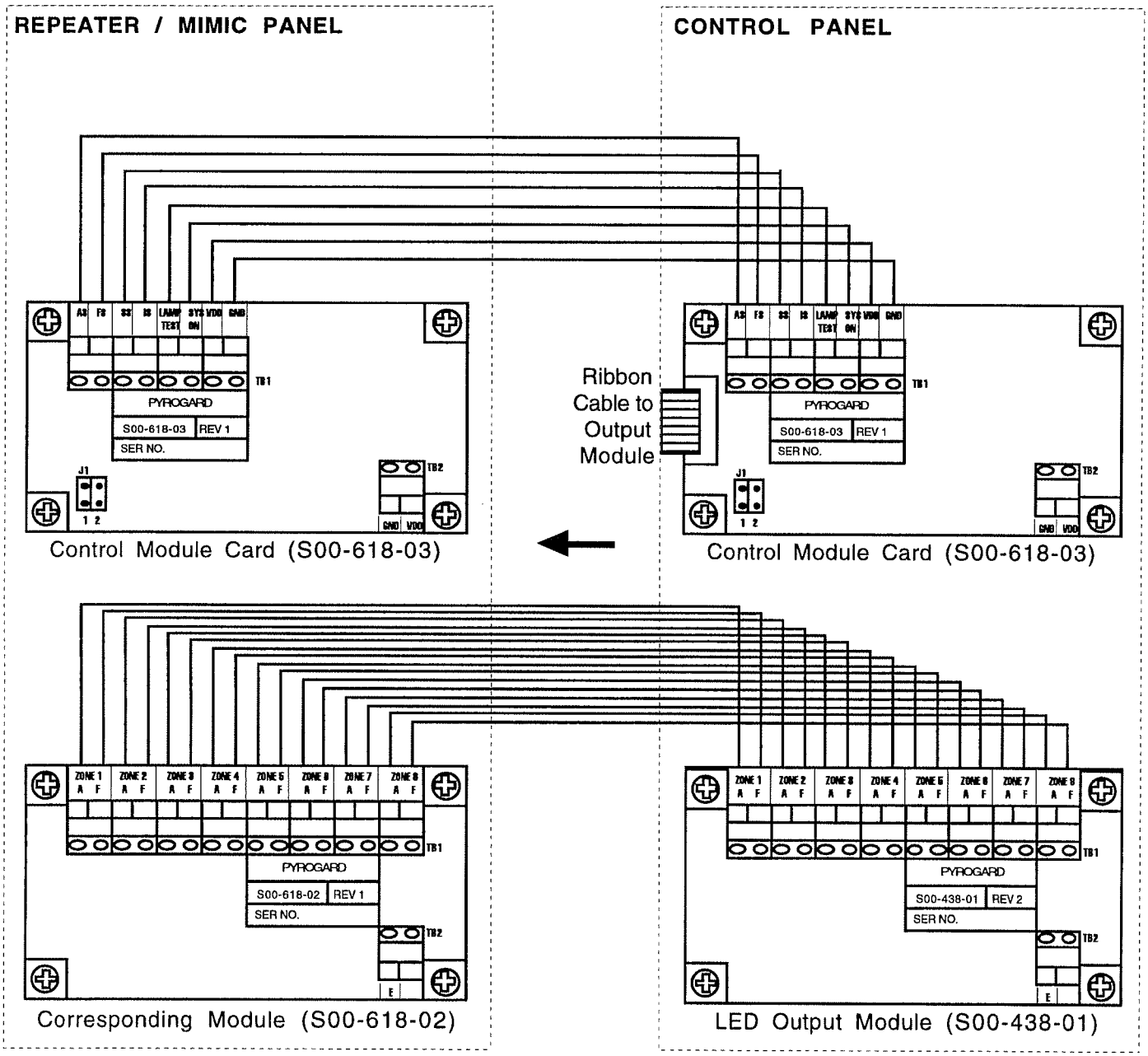

Fig. 16 Control Panel to Repeater / Mimic Panel Wiring

Specifications for Cable Sizes and Wiring Lengths between Control panel and Repeater / Mimic Panel are as follows :

WIRE	SIZE (mm^2)	LENGTH (M)
VDD, GND (for Sub-panels without independent Power Supply units only	0.5	36
	1.0	72
	1.5	144
	2.5	180
AS, FS, SS, IS, LAMP TEST, SYSTEM ON	0.5	500
ZONE A / F SIGNAL LINES	0.5	500

A C MAINS CONNECTION

The Control Panel operates on 110VAC±10% or 220VAC±10% 50/60 Hz Mains Supply. Connect the Live (L), Neutral (N), and Earth (E) wires from the A C Mains to the corresponding terminals at the bottom of the Power Supply Unit (see Fig. 17).

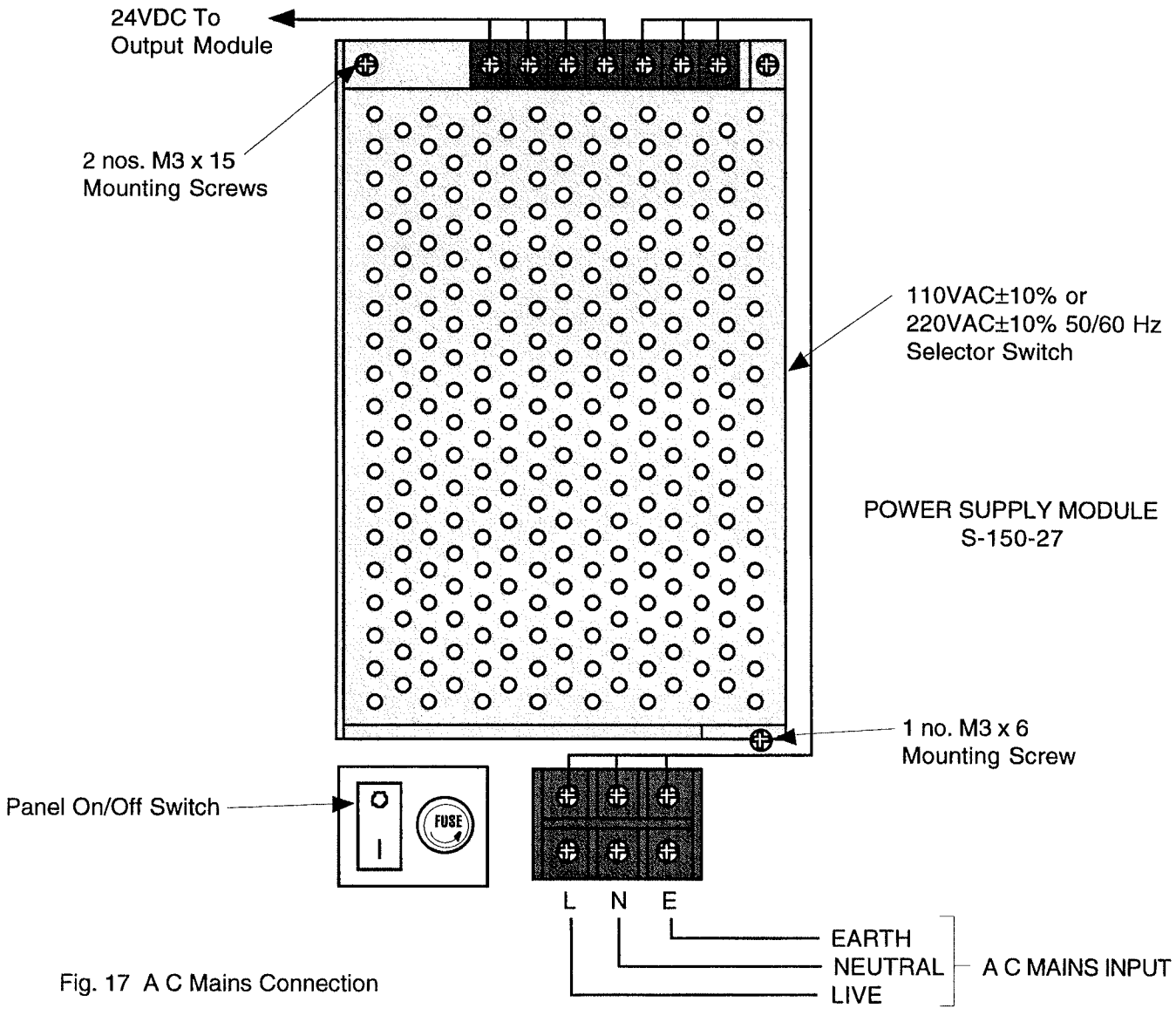

Fig. 17 A C Mains Connection

3.0 TROUBLE SHOOTING

All fault signals will be indicated by the main "GENERAL TROUBLE" LED and the relevant fault LED. For certain indications, the relevant fault LED is on the inside of the panel.

Indication	Cause	Solution
A C Mains Fault	A C Mains power has been cut off or there is a Power failure	Check AC Mains wire connection or turn A C Mains On
Zone Fault	There is either an open circuit in in the indicated Zone Circuit wiring or a short circuit	1. Check Zone Circuit wiring or connections 2. Check if E.O.L. resistor is connected
Bell Line Fault (refer to LEDs on the Output Module)	There is either an open circuit in the Bell Circuit wiring or a short circuit B-O = Bell Circuit is Open B-S = Bell Circuit is Shorted BFF = Bell Circuit Fuse Blown	1. Check Bell Circuit wiring or connections 2. Check if E.O.L. resistor is connected 3. Check / Replace Bell Fuse
Earth Fault (refer to LEDs on the CPU Module)	Part of the Zone or Bell circuits have been shorted to earth E-V = Short Circuited to internal voltage supply E-GND = Short Circuited to Earth Ground	Check Zone or Bell circuits according to the corresponding Zone Fault or Bell Fault indication
Charger Fault	The Battery Charger circuit is faulty and/or the Batteries are not being recharged.	Check connections to battery or replace Charger Module
Battery Fault (Refer to LEDs on the CPU Module)	BD = Battery Disconnected - the standby batteries are not connected or damaged BR = Battery Reversed - the +ve and -ve terminal connections on the standby batteries are reversely connected BDA = Battery Damaged SBFF = Power Supply fuse blown or AC Mains is off.	Connect batteries or check battery voltage level Make sure the Red +ve wire is connected to the +ve terminal and the Black -ve wire to the -ve terminal Battery needs to be replaced. Check/Replace Power Supply fuse or switch AC Mains on.
Battery Low	Battery Voltage is below 20V.	Battery should be recharged or changed. If the voltage drops below 18V, devices may not operate. Prolonged drain will also damage the batteries permanently

4.0 STANDBY BATTERY REQUIREMENTS

Calculations for Standby Battery requirements are based on Singapore Standard CP 10 : 1993. This will allow operation of the fire alarm system for 24 hours on standby, and subsequently 1/2 hour in alarm condition.

Panel Size	Current Requirement	Minimum Battery Size
8 Zone	61 mA	6 Ah
16 Zone	97 mA	6 Ah
32 Zone	169 mA	6 Ah
48 Zone	241 mA	10 Ah
56 Zone	277 mA	10 Ah
64 Zone	313 mA	10 Ah
80 Zone	385 mA	12 Ah

For longer standby periods, please contact Pyrogard Technologies or your local authorized distributor.

4.1 PANEL SPECIFICATIONS

	Model / Type :	MX200EN / Conventional
	Capacity :	8 ~ 80 Zones
Power Supply	Type :	Switching
	AC Input :	110 VAC±10% or 220 VAC±10% @ 50/60 Hz
	DC Output :	5.2A @ 29 VDC
Battery Charger	Charger Voltage :	28.8 VDC
	Charge Current :	1.10 ~ 1.71 A (Fast Charge)
		55 mA ~ 100 mA (Float Charge)
		27 mA ~ 50 mA (Trickle Charge)
	Charger Fuse :	2A Max.
Output Module	Bell Output :	2 x 1.25A @ 28 VDC each, 2A total
	Bell Circuit Fuse :	1.25A
	24VDC Input Fuse :	5A
	Relay Rating :	5A, 100 VDC / 10A, 125 VAC
Control System	CPU Module Fuse :	3A Max.
	CPU Power Input :	8mA @28 VDC (Normal)/27mA @28 VDC (Alm)
	F.A.R.E. Module Fuse :	500mA
	Zone Circuit Voltage :	28 VDC
	Zone Circuit Current :	17.5mA (Normal) / 22mA (Alarm)
	Operating Temperature :	-5°C ~ +45°C
	Operating Environment :	Max. 95% RH Non-condensing

5.0 EXTINGUISHING GAS RELEASE CONTROL

The MX200 Control Panel can also be configured for use as an Extinguishing Gas Release Control Panel such as FM200, Argon, FE13, CO2, e.t.c. This configuration has been designed to operate in accordance with NFPA 72 (1996) and NFPA 2001.

Zone 1 and Zone 2 are cross zoned whereby an alarm in one Zone will initiate a pre-alarm. Only when there are alarm signals from both Zones will the Alarm Bell sound, and the gas release countdown timer begin. The countdown timer on the front panel will display the time left before the release of gas.

During this time, when the "Abort" switch is pressed, the countdown will be halted until the switch is released again.

NOTE : To Stop the countdown completely, press the "Reset" switch on the control panel before the counter reaches "00" (Zero).

For use as an Extinguishing Gas Release Control Panel, connect the panel as shown in Fig. 18.

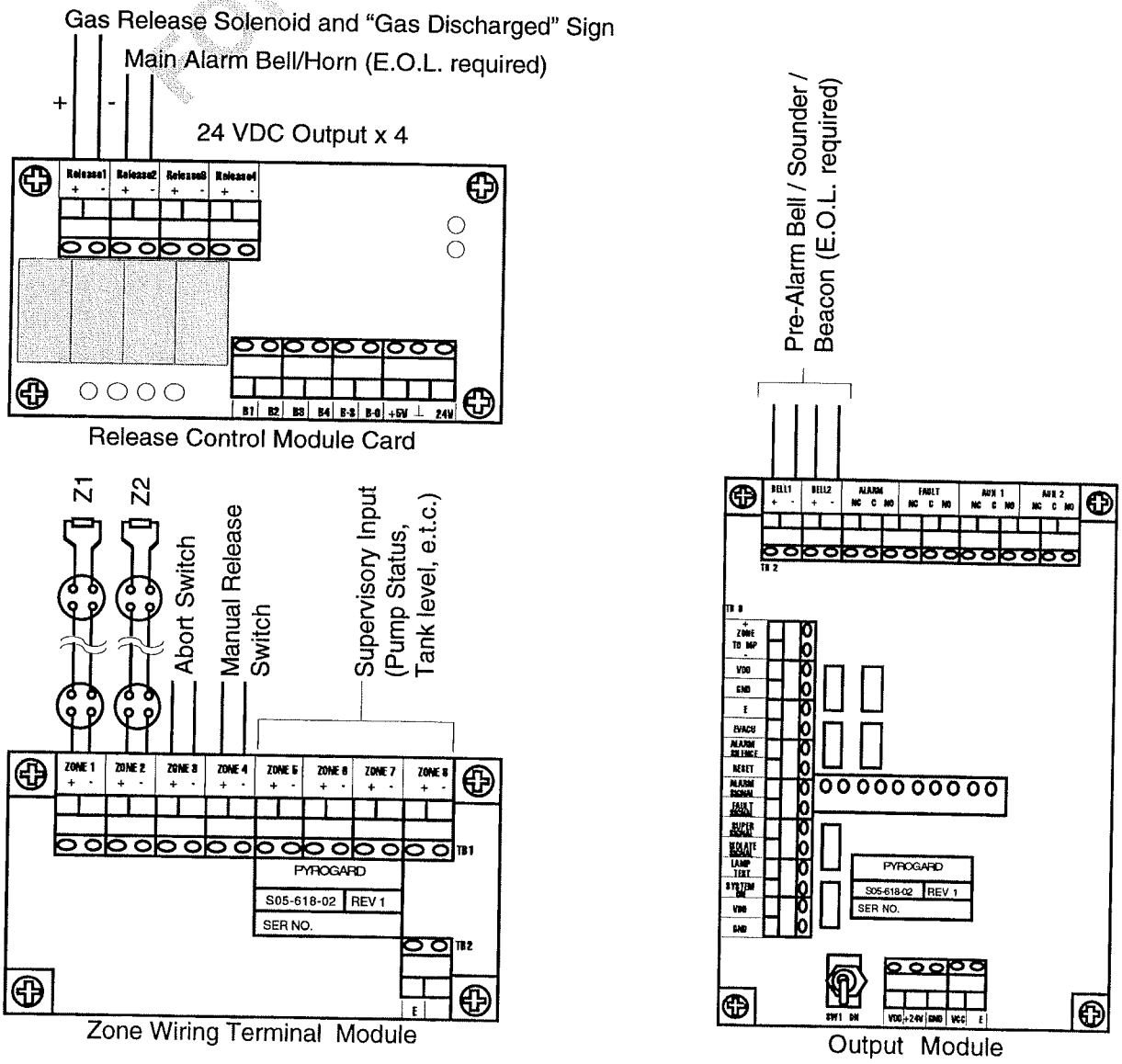

Fig. 18 Gas Release Control Wiring

5.1 GAS RELEASE OPERATION

The countdown timer is factory set at 30 seconds. This can be adjusted from 0 seconds to 120 seconds. Please consult your authorised distributor for setting details.

The NFPA 72 and NFPA 2001 sequence of operation is as follows :

CROSS ZONE	
Receipt of Alarm Signal from one zone only :	Bell 1 Sound Continuously
Receipt of Alarm Signal from both zones :	Bell 1 Stop Bell 2 Sound Intermittently Countdown Timer starts
Countdown Timer Reaches "00"	Bell 2 Sound Continuously Solenoid Released Gas Discharged Sign lights up
Reset Switch Pressed	Bell 2 Stop Solenoid Reset System Reset

The panel can also be set for non-cross zone operation.

NON-CROSS ZONE	
Receipt of Alarm Signal from any zone :	Bell 1 Sound Continuously Bell 2 Sound Intermittently Countdown Timer starts
Countdown Timer Reaches "00"	Bell 1 Sound Continuously Bell 2 Sound Continuously Solenoid Released Gas Discharged Sign lights up
Reset Switch Pressed	Bell 2 Stop Solenoid Reset System Reset

FOR FM200 & CO2 PANEL ONLY

PT/MX200EN/P8-NOL/01

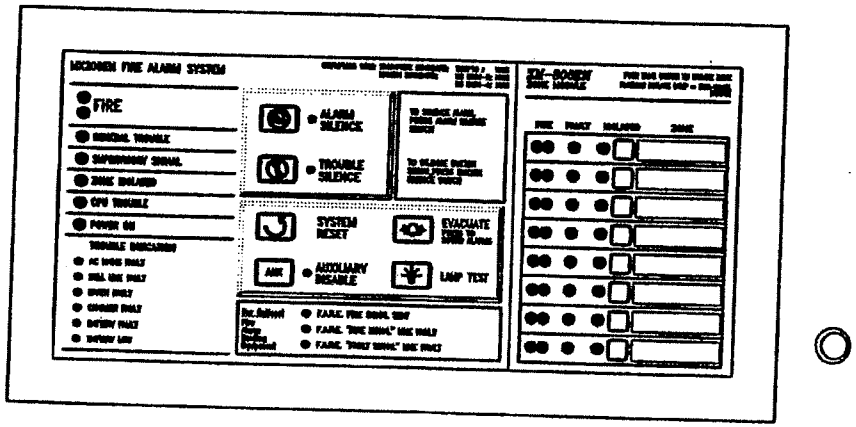

NOTE:

1. Dimension: 460(L)x390(W)x150(H)mm
2. This panel is suitable for usage from 1 to 8 Zones.

NO.	DATE	AMENDMENTS

PYROGARD TECHNOLOGIES PTE LTD
BLK 30 KALLANG PLACE #06-21 TO 24 SINGAPORE 339159
TEL: 2914288 (5 LINES) TELEX: RS 25129 SEALAND
FAX: 2968180 E-MAIL: PYROGARD@PACIFIC.NET.SG

DRAWING TITLE	*MX200EN 8-ZONE CABINET LAYOUT*
DRAWING NUMBER	PT/MX200EN/P8-NOL/01
REV.	

SCALE	1 : 4	DRAWN	MICHAEL JIN
UNIT	mm	DESIGNED	MICHAEL JIN
DATE	APR. 2002	CHECKED	NICHOLAS CHONG
GRADE	L	APPROVED	NICHOLAS CHONG

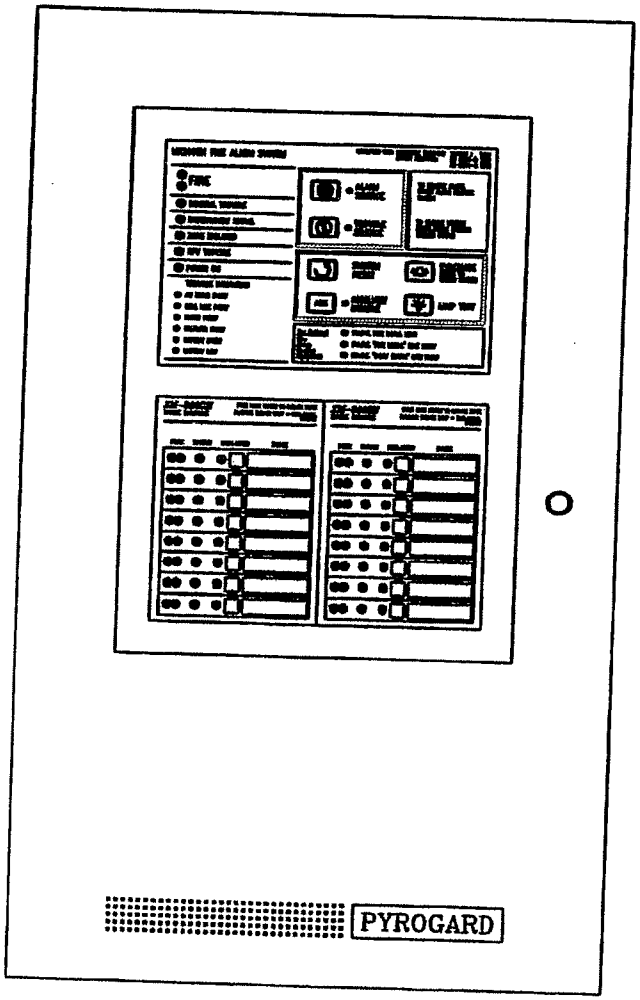

NOTE:

1. Dimension: 360(L)x600(W)x150(H)mm
2. This panel is suitable for usage from 9 to 16 Zones.

NO.	DATE	AMENDMENTS

PYROGARD TECHNOLOGIES PTE LTD
BLK 30 KALLANG PLACE #06-21 TO 24 SINGAPORE 339159
TEL: 2914288 (5 LINES) TELEX: RS 25129 SEALAND
FAX: 2968180 E-MAIL: PYROGARD@PACIFIC.NET.SG

DRAWING TITLE
MX200EN 16-ZONE CABINET LAYOUT

DRAWING NUMBER
PT/MX200EN/P16-NOL/01

REV.

SCALE	1 : 6	DRAWN	MICHAEL JIN
UNIT	mm	DESIGNED	MICHAEL JIN
DATE	APR. 2002	CHECKED	NICHOLAS CHONG
GRADE	L	APPROVED	NICHOLAS CHONG

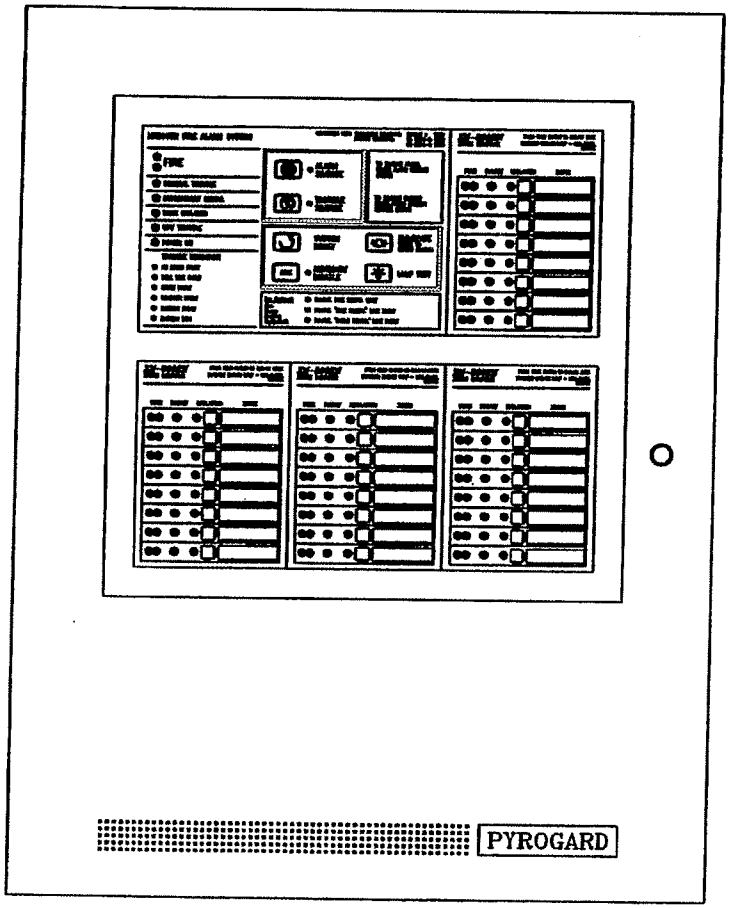

NOTE:

1. Dimension: 460(L)x600(W)x150(H)mm
2. This panel is suitable for usage from 17 to 32 Zones.

NO.	DATE	AMENDMENTS

PYROGARD TECHNOLOGIES PTE LTD
BLK 30 KALLANG PLACE #06-21 TO 24 SINGAPORE 339159
TEL: 2914288 (5 LINES) TELEX: RS 25129 SEALAND
FAX: 2968180 E-MAIL: PYROGARD@PACIFIC.NET.SG

DRAWING TITLE	*MX200EN 32-ZONE CABINET LAYOUT*
DRAWING NUMBER	PT/MX200EN/P32-NOL/01
REV.	

SCALE	1 : 6	DRAWN	MICHAEL JIN
UNIT	mm	DESIGNED	MICHAEL JIN
DATE	APR. 2002	CHECKED	NICHOLAS CHONG
GRADE	L	APPROVED	NICHOLAS CHONG

PT/MX200EN/P56-NOL/01

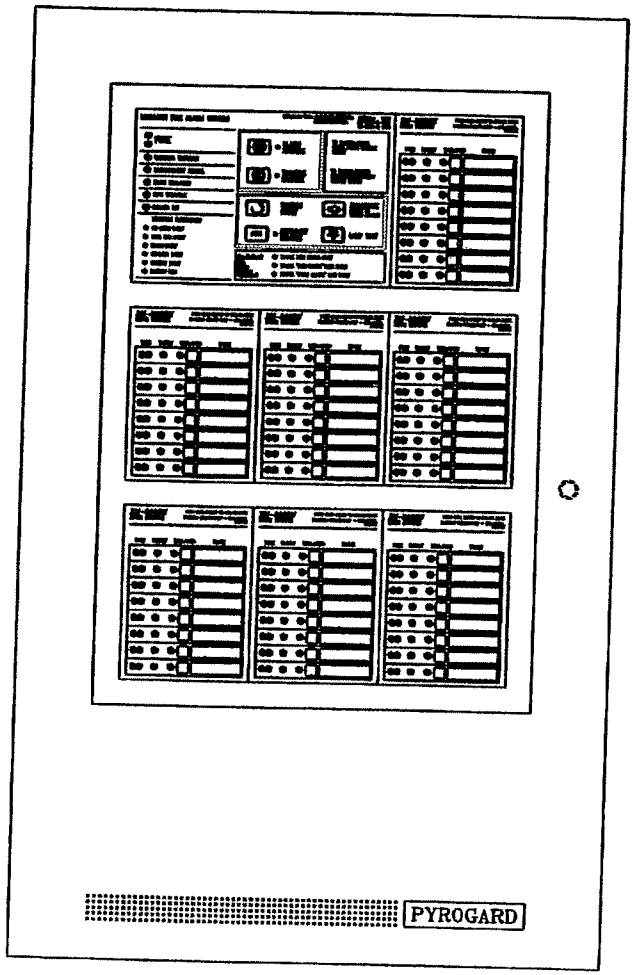

NOTE:

1. Dimension: 460(L)x760(W)x150(H)mm
2. This panel is suitable for usage from 33 to 56 Zones.

NO.	DATE	AMENDMENTS

PYROGARD TECHNOLOGIES PTE LTD
BLK 30 KALLANG PLACE #06-21 TO 24 SINGAPORE 339159
TEL: 2914288 (5 LINES) TELEX: RS 25129 SEALAND
FAX: 2968180 E-MAIL: PYROGARD@PACIFIC.NET.SG

DRAWING TITLE
MX200EN 56-ZONE CABINET LAYOUT

DRAWING NUMBER
PT/MX200EN/P56-NOL/01

REV.

SCALE	1 : 7	DRAWN	MICHAEL JIN
UNIT	mm	DESIGNED	MICHAEL JIN
DATE	APR. 2002	CHECKED	NICHOLAS CHONG
GRADE	L	APPROVED	NICHOLAS CHONG

PT/MX200EN/P80-NOL/01

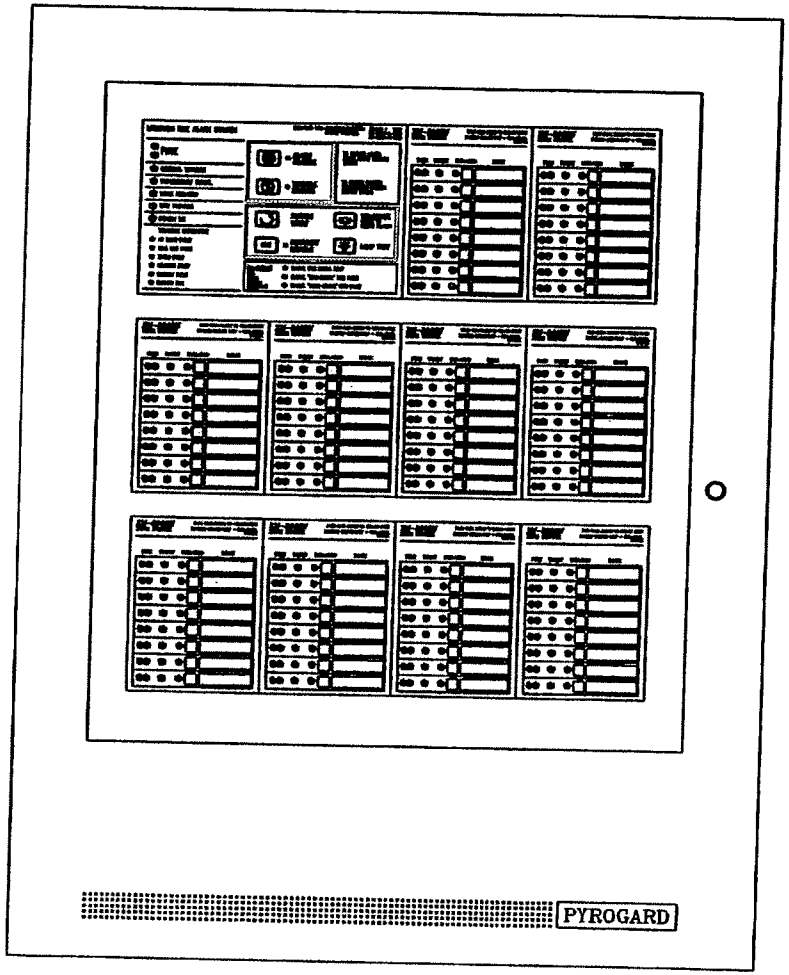

NOTE:

1. Dimension: 580(L)x760(W)x150(H)mm
2. This panel is suitable for usage from 57 to 80 Zones.

NO.	DATE	AMENDMENTS

PYROGARD TECHNOLOGIES PTE LTD
BLK 30 KALLANG PLACE #06-21 TO 24 SINGAPORE 339159
TEL: 2914288 (5 LINES) TELEX: RS 25129 SEALAND
FAX: 2968180 E-MAIL: PYROGARD@PACIFIC.NET.SG

DRAWING TITLE	*MX200EN 80-ZONE CABINET LAYOUT*		
DRAWING NUMBER	PT/MX200EN/P80-NOL/01	REV.	
SCALE	1 : 7	DRAWN	MICHAEL JIN
UNIT	mm	DESIGNED	MICHAEL JIN
DATE	APR. 2002	CHECKED	NICHOLAS CHONG
GRADE	L	APPROVED	NICHOLAS CHONG

PYROGARD

Solutions in Fire Detection

INDOOR CLASS 2000 CALL POINT

MODELS WR2001, WR2072, WR2061 AND THEIR DERIVATIVES

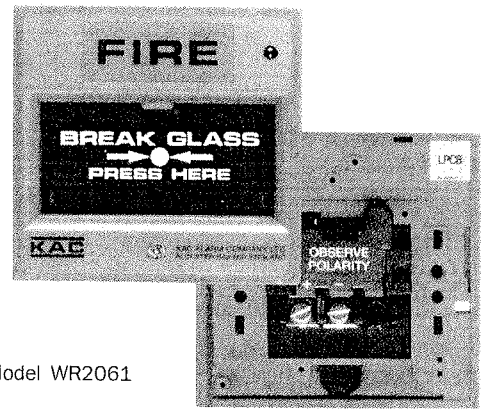

LED Model WR2061

Models of CLASS 2000 are traditional and conventional; Traditional in that the installer terminals are of the traditional style, on the rear of the call point, Conventional in that the call points are for conventional rather than analogue/addressable applications.

ELECTRICAL CONFIGURATIONS

These five models differ with regard to their electrical configurations.

In model reference WR2001, the first of the four numeric digits, 2, identifies the model as being of CLASS 2000. The remaining three digits refer to the actual electrical configuration.

CONFIGURATION "001" - Single Pole Changeover

Model Example: WR2001

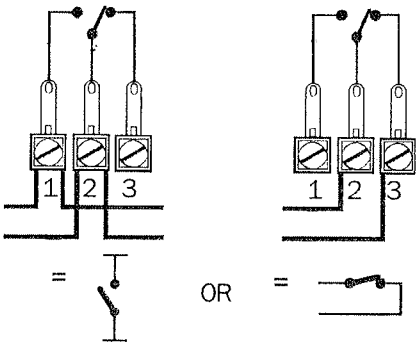

CONFIGURATION "012" - The Retrofit

Model Example: WR2012

THE RETROFIT can be used in a basic normally open system or in a normally open system requiring either a 470Ω or a 680Ω monitoring resistor.

THE RETROFIT is fitted with both 470 and 680 ohm 1.0 Watt carbon film resistors. The terminal cover is supplied loose; this enables the engineer to cut off and discard the unwanted components before fitting the cover and installing the call point.

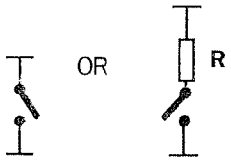

WHERE 'R' IS 470Ω OR 680Ω

CONFIGURATION "061+END CODE" - LED Model

Model Example: WR2061-120-470

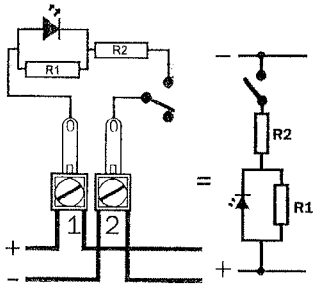

The red LED is fitted adjacent to the Function Marking (FIRE) as in the model illustrated top left.

The END CODE is used to denote the values, in ohms, of the 0.5 Watt resistors R1 and R2.

In the model example WR2061-120-470, R1 is 120Ω and R2 is 470Ω. R2 is current limiting and R1 is to ensure that the call point functions if the LED fails to open circuit.

CONFIGURATION "072+END CODE" - With Monitoring Resistor

Model Example: WR2072-470

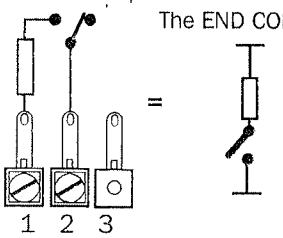

The END CODE is used to denote the value of the 1.0 Watt resistor in ohms.

In the model example WR2072-470, the 1.0 Watt monitoring resistor is 470Ω.

CONFIGURATION "101" - Normally Open Only, Closing on Alarm.

Model Example: WR2101

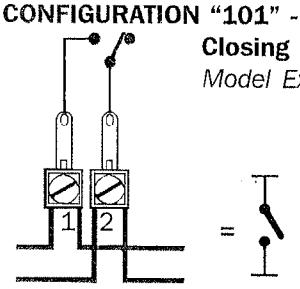

PYROGARD TECHNOLOGIES PTE LTD
Blk 30 Kallang Place #06-21 Singapore 339159
Tel : (65) 2914288 Fax : (65) 296-8180 / (65) 296-4340
Email : sales@pyrogard.com.sg

Certified to ISO 9002 Quality Standards Cert. No. 30699

MECHANICAL DATA ..... continued

EXTERNAL DIMENSIONS IN MM

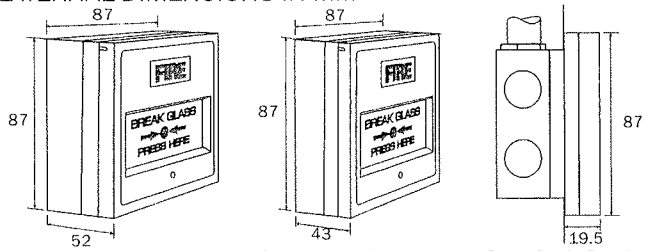

ELECTRICAL DATA

MAXIMUM CURRENTS AND CONTACT RESISTANCE:
The internal connections of models of configuration "001", single pole changeover and "101", normally open only, limit current carrying capacity to 3.0 Amps. The internal components of the other models dictate maximum current and voltage. The contacts of the switch are of fine silver; their maximum contact resistance is 0.2Ω measured as required by BS5839:Part 2:1983, Clause 8.

FIRE ALARM MODELS are not Approvals Listed for use at voltages greater than 50 Volts.

SPECIAL APPLICATION MODELS of model configuration "001" are intended primarily for use with voltages of the order of 230Volts 50Hz. However, as these models are electrically identical to fire alarm model WR2001 they can be used on voltages down to 12 Volts DC.

SPECIAL APPLICATION CALL POINTS

In model reference W**R**2001, the "**R**" denotes **R**ed. KAC literature item LIT:105 illustrates a selection of call points in colours other than red, for other emergency switching applications. These "Special Application" models are manufactured in "001" configuration (single pole changeover) as standard, in other configurations to special order. Instead of an "R", the second letter of the model reference would be the initial letter of the colour; W**W**2001 - **W**hite, W**Y**2001 - **Y**ellow, etc.



A Special Application Model

TABLE OF SPECIAL APPLICATION MODEL REFERENCES

WHITE	YELLOW	BLUE	GREEN
Call Point Only			
WW2001	**WY2001**	**WB2001**	**WG2001**
Call Point complete with Surface Plastic Mounting Box			
WW2001/SW	**WY2001/SY**	**WB2001/SB**	**WG2001/SG**
Call Point complete with Surface Metal Mounting Box			
WW2001/MW	**WY2001/MY**	**WB2001/MB**	**WG2001/MG**
Call Point complete with Pattress			
WW2001/PTW	**WY2001/PTY**	**WB2001/PTB**	**WG2001/PTG**

ACCESSORIES.....continued

TRANSPARENT HINGED COVER

Reference: M298
All CLASS 2000 Models can be fitted with a Transparent Hinged Cover which provides additional protection against accidental operation. The cover must be raised before the call point can be operated.



A call point fitted with a transparent hinged cover

IMPORTANT NOTE:
All CLASS 2000 call points are equipped to receive a Hinged Cover which is supplied separately and is fitted by the Installer. Previously, a Hinged Cover was a 'Factory Fit' accessory.

BREAKABLE COVER SEAL

Reference: M355
Supplied in packs of 5.
Example: 4 packs of 5 M355 = 20 seals.

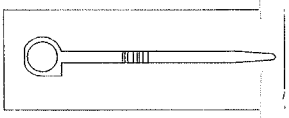

A hinged cover fitted with a seal M355 can only be lifted by breaking the seal. M355 can be used with the previous model of transparent hinged cover for which ol seal M96 was produced but M96 cannot be used with new cover M298.

One end of the thermoplastic seal is held captive as shown.

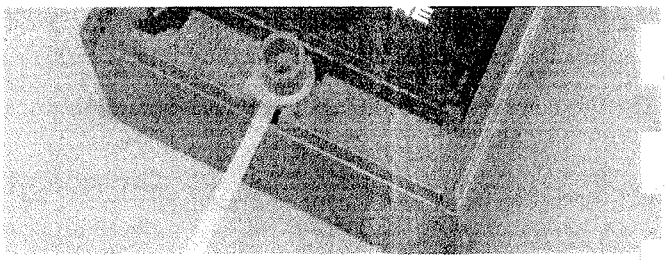

The other end passes through the toothed hole in the cover and is pulled tight.



The seal is then trimmed.

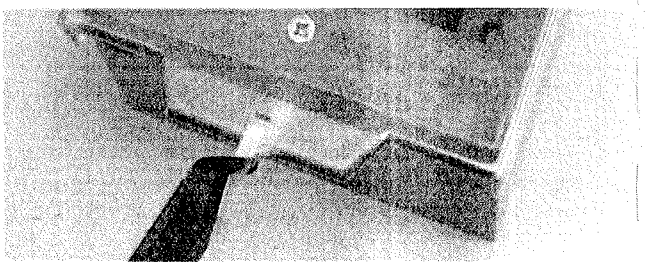

The cover may now only be lifted by breaking the seal; ar additional guard against improper use.

Motor Driven Bell

MBA-BELL

The MBA series bell are UL listed DC Motor driven bells that gives out a louder mechanical resonant tone.
This new improvement is designed to make the whole series more effective and provide performance and dependability at low current consumption.

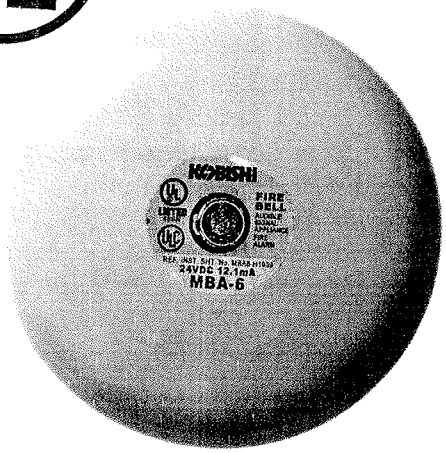

MBA-6

Features :

* UL Approved bell
* Weatherproof type
* Low current consumption only 12 mA at 24VDC.

SPECIFICATIONS

Model #	Voltage	24VDC					33VDC				
		UL			ULC	TYPICAL	UL			ULC	TYPICAL
		DC mA	FWR mA	db	db	db	DC mA	FWR mA	db	db	db
MBA-6	6 inch	12.1	12.4	83	85	87	13.5	24.2	85	85	89
MBA-8	8 inch	25.0	30.6	83	85	87	40.0	43.9	86	85	90
MBA-10	10 inch	23.0	26.8	84	85	91	34.0	46.0	87	85	91

UL Spherical dB measurement

Sound level measurement are made in accordance with UL standard 464. The sound power output is measured in a reverberant room qualified for pure tones under methods for the Determination of Sound Power Level of Small Sources in Reverberation Rooms. ANSI S1.21. Bell shall be capable of providing a sound output equivalent to that of on omni-directional source with on A-weighted sound pressure level of at least the level specified in the unit marking but not less than 75 decibels in any case.

LISTED
Audible Signal Appliance
FIRE ALARM SERVICE

APPROVED
MEA

PYROGARD TECHNOLOGIES PTE LTD
Blk 30 Kallang Place #06-21 Singapore 339159
Tel : (65) 2914288 Fax : (65) 296-8180 / (65) 296-4340
Email : sales@pyrogard.com.sg

MBA ALARM BELL INSTALLATION INSTRUCTIONS

INDOOR/OUTDOOR · WALL MOUNT ONLY

Instruction No. MBA6-H1009 001109 a

Installation Note

1. Remove the gong
2. Wire the bell in the circuit. Refer to Fig.1.
3. Mount the base on a 4" square or 2" wide electrical box with the striker facing down. Refer to Fig.3.
4. Replace the gong.

*Note : The top of the bell must be mounted a minimum of 90" above the floor. or within 6" of the ceiling

Fig.1 Wiring (rear view) Observe Polarity

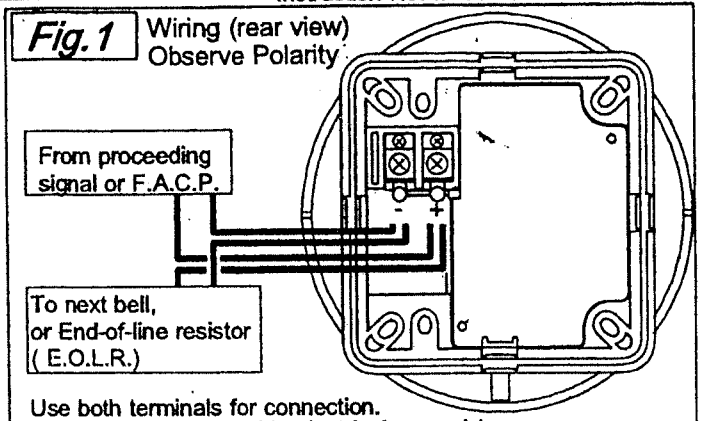

Use both terminals for connection.
Break wire run to provide electrical supervision.

Fig.2 Basic Mechanism and Gongs Observe Polarity

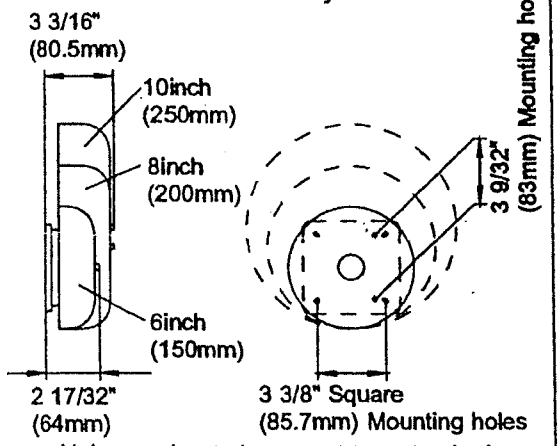

Holes are located to mount to a standard 4" square outlet box, or 2" wide gangable or non-gangable switch box.

Fig.3 Surface Installation

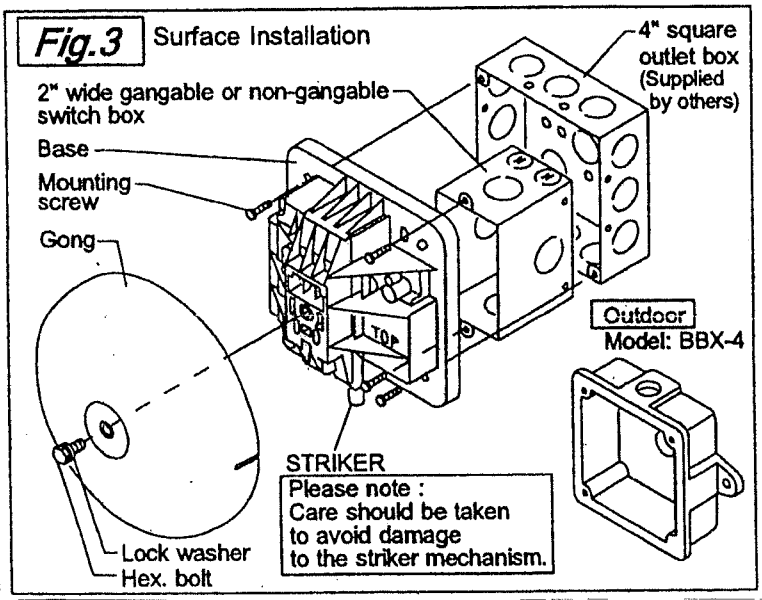

DCD-1E

COMBINED (FT & ROR) HEAT DETECTOR

Specifications

	DCD-R1E 90°C	DCD-1E 60°C	DCD-2E 60°C	DCD-135 135°F	DCD-190 190°F	DCD-A 60°C	DCD-C 90°C	DCD-2C 60°C	DCD-3C 70°C
Applicable Standard Response Grade	EN54 Pt5 Range1	EN54 Pt5 Grade1	EN54 Pt5 Grade2	UL521 Ordinary	UL521 High	AS1603 TypeA	AS1603 TypeC	GB4716	GB4716
Rated Voltage	DC 24V								
Working Voltage Range	DC 15V ~ 30V								
Current Consumption	50μA at 30V	35μA at 30V	35μA at 30V	50μA at 30V	50μA at 30V	35μA at 24V	50μA at 24V	35μA at 30V	35μA at 30V
Maximum Switching Current	40mA	40mA	40mA	150mA	150mA	80mA	80mA	40mA	40mA
Heat Sensing Current	Thermistor								
Alarming Fixed Temperature Range	80°C	58°C	62°C	135°F	190°F	63°C	92°C	62°C	70°C
Operating Ambient Temperature Range	−10°C ~ +50°C (14°F ~ 122°F)						−10°C~+70°C (14°F~158°F)	−10°C ~ +50°C (14°F ~ 122°F)	
Storage Temperature Range	−30°C ~ +70°C (−22°F~158°F)								
Allowable Ambient Humidity (at 40°C)	95%RH Non - Condensing								
Dimensions (incl.	ϕ100mm x 37mm (ϕ100mm x 45mm)								
Weight (incl. Base)	70g (115g)								
Colour	Ivory White								

Unit : mm

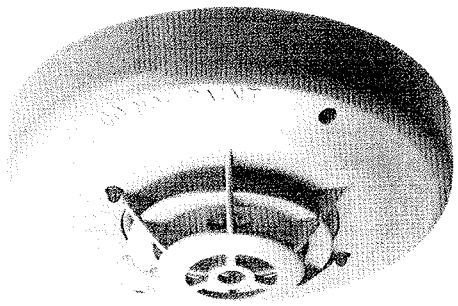

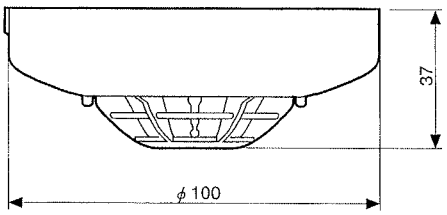

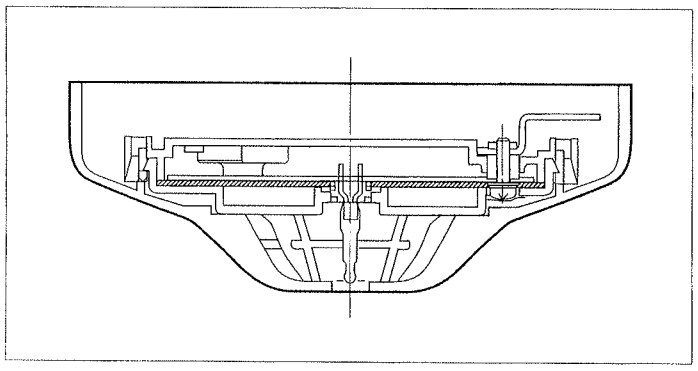

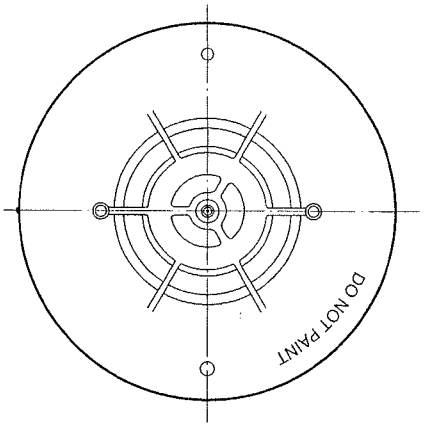

PYROGARD TECHNOLOGIES PTE LTD
Blk 30 Kallang Place #06-21 to 24 Singapore 339159
Tel : (65) 6291 4288 Fax : (65) 6296 8180 / (65) 6296 4340
Email : sales@pyrogard.com.sg

Certified to ISO 9002 Quality Standards Cert. No. 30699

Combined Type Heat Detector : DCD

Features

1. Hochiki's new DCD series of Combined Type Heat Detector has been designed to meet the requirements for early detection by combining rate of rise and fixed temperature functions. This combination enables the detector to offer double protection by determining the heat build up from a sudden change in the ambient temperature or when the surrounding temperature exceed the specified threshold limit.
2. The DCD Heat Detector has been designed with a one piece outer cover which gives an aesthetically pleasing modern low profile shape that will comply exactly with interior design requirements and/or customer needs without detracting the appearance of the ceiling.
3 Each detector is equipped with twin fire alarm LED indicators that allows 360 degree viewing. The light from the LEDs is transmitted via unique light guides which is achieved by the LEDs being sealed on the PCB for increased protection and reliability.
4. A key feature of the DCD Heat Detector is its unique circuitry which requires very low supervisory current to operate thereby making it both practical and cost effective for heat detection. This important feature enables more detectors to be connected to a control panel.
5. The DCD heat detector has the widest possible installation applicability as it is designed to sense heat in a vertical or horizontal position.

Principle of Operation

The DCD Combined Heat Detector consist of two thermistors, whose characteristics changes according to its surrounding temperature. One of the thermistor is located on the outside while the other is located inside the housing. By comparing the difference in the characteristics of each thermistor, a rate of rise function is easily obtained. Likewise, from the characteristics of the external thermistor a fire condition can be determined when the ambient temperature exceeds the specific threshold level of the detector.

Applications

The DCD Combined Heat Detector is suited for installation where high heat output or rapid heat build up under fire condition are expected. It is also applicable to environments where smoke detectors are unsuitable because of the presence of steam or cooking fumes such as in a kitchen or boiler room. Consideration should be given to the maximum normal operating temperature before deciding on the most appropriate DCD detector for the application.

Maintenance

The DCD can be fitted onto a range of common mounting base which allows easy detector interchange. A simple anti-tamper locking mechanism is provided which is enabled by removing a small plastic lug on the back of the detector. Once locked the head can only be removed using a special head removal tool.

Compatible Bases

YBN-R/4, YBN-R4C, YBN-R/4SK, YBK-R/5, YBK-R/5SK, YBK-R/5ZD, YBK-R/5R2
YB0-R/5, YBO-R/5SK, YBO-R/5ZD, YBO-R/5R2 YBO-R4C

SIJ-E

IONIZATION SMOKE DETECTOR

Specifications

	SIJ-E	SIJ-24	SIJ-AS
Applicable Standard	EN54 Pt7	UL268	AS1603
Rated Voltage	DC 24V		
Working Voltage Range	DC 15V~30V		
Current Consumption	25μA at 24V	25μA at 24V	25μA at 24V
Maximum Switching Current	40mA	80mA	80mA
Radioactive Source	Am^{241} 18.5kBq		
Operating Ambient Temperature Range	–10°C ~ +50°C (14°F ~ 122°F)		
Storage Temperature Range	–20°C ~ +60°C (–4°F ~ 140°F)		
Allowable Ambient Humidity (at 40°C)	95% RH Non-Condensing		
Dimensions (incl. Base)	ϕ100mm x 38mm (ϕ100mm x 46mm)		
Weight (incl. Base)	85g (130g)		
Color	Ivory		

Compatible Bases

YBN-R/4, YBN-R/4SK, YBK-R/5, YBK-R/5SK, YBK-R/5ZD, YBK-R/5R2
YB0-R/5, YBO-R/5SK, YBO-R/5ZD, YBO-R/5R2

Unit : mm

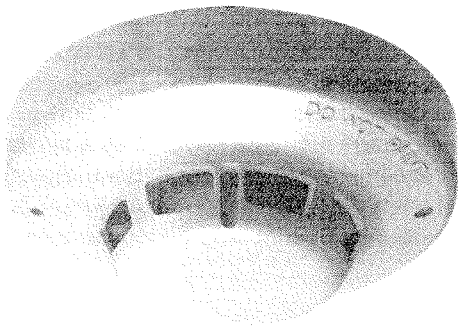

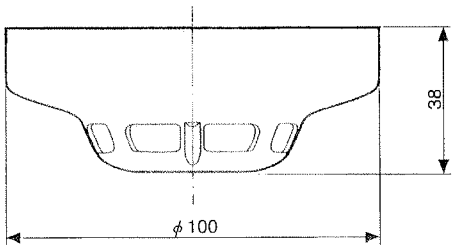

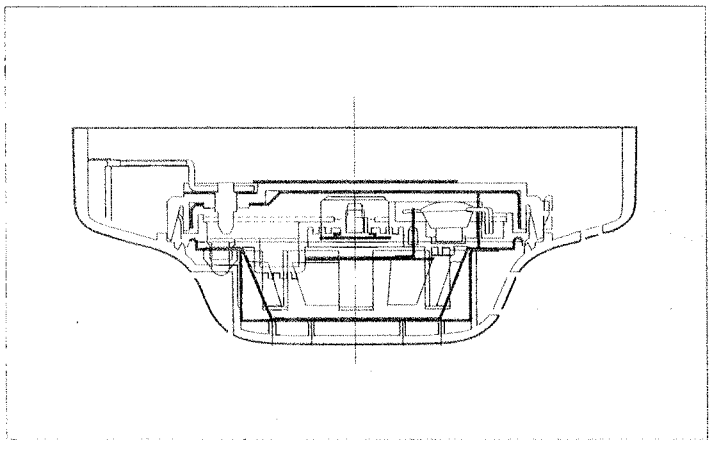

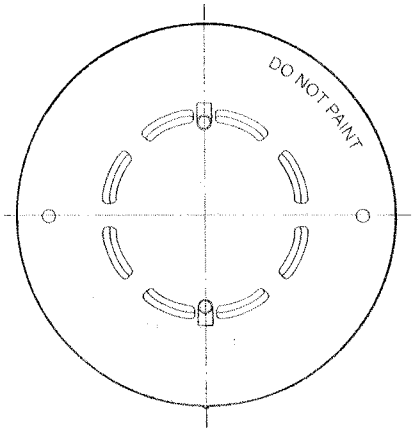

PYROGARD TECHNOLOGIES PTE LTD
Blk 30 Kallang Place #06-21 to 24 Singapore 339159
Tel : (65) 6291 4288 Fax : (65) 6296 8180 / (65) 6296 4340
Email : sales@pyrogard.com.sg

Certified to ISO 9002 Quality Standards Cert. No. 30699

Ionization Smoke Detector : SIJ

Features

1. The Hochiki SIJ Ionization Smoke Detector has been designed with a one piece outer cover which gives an aesthetically pleasing modern low profile shape that will comply exactly with interior design requirements and/or customer needs without detracting the appearance of the ceiling.
2. Each detector is equipped with twin fire alarm LED indicators that allows 360 degree viewing. The light from the LEDs is transmitted via unique light guides which is achieved by the LEDs being sealed on the PCB for increased protection and reliability.
3. The SIJ exceptional capabilities results from incorporating a single radioactive source and dual chamber for stable operation even under extreme environmental conditions(including atmospheric changes).
4. The unit is designed to provide trouble free operation in location subjected to strong external vibrations and voltage fluctuations. The overall construction is also aimed at maximizing its reliability under conditions such as high humidity which affects performance in conventional detectors.
5. The high impedance circuitry of the SIJ keeps power consumption very low thus allowing more units to be connected in a single two-wire loop circuit.

Principle of Operation

The SIJ Ionization Smoke Detector has two sampling chambers, an outer ionization chamber and an inner ionization chamber. Smoke or invisible combustion gases can freely penetrate the outer chamber, but the inner chamber is virtually sealed to prevent easy entry. Both chambers are ionized by a radioactive source (AM241) thereby allowing a very small current to flow in the circuit. The presence of visible smoke or invisible gases influences the current flow proportionately in the outer chamber resulting in a change in the voltage ratio between the chambers. This imbalance is then amplified inside the detector and transmitted to the fire alarm control unit.

Application

The SIJ Ionization smoke detector has a responsive and highly stabile operation that gives it an extremely wide range of uses. The SIJ can be used in areas where early warning of trouble from super-heating or flaming combustibles is expected.

Maintenance

The SIJ can be fitted onto a range of common mounting base which allows easy detector interchange. A simple anti-tamper locking mechanism is provided which is enabled by removing a small plastic lug on the back of the detector. Once locked the head can only be removed using a special head removal tool.

SLR-E

PHOTOELECTRIC SMOKE DETECTOR

Specifications

	SLR-E	SLR-24	SLR-AS	SLR-C
Applicable Standard	EN54 Pt7	UL268	AS1603	GB4715
Rated Voltage	DC24V			
Working Voltage Range	DC15V ~ 30V			
Current Consumption	35μA at 30V	45μA at 30V	35μA at 24V	35μA at 30V
Maximum Switching Current	40mA	150mA	80mA	40mA
Light Source	Infrared Led			
Operation Ambient Temperature Range	−10°C ~ +50°C (14°F ~ 122°F)			
Storage Temperature Range	−20°C ~ +60°C (−4°F ~ 140°F)			
Allowable Ambient Humidity (at 40 degree celsius)	95%RH Non - Condensing			
Dimensions (incl. Base)	ϕ100mm x 38mm (ϕ100mm x 46mm)			
Weigh (incl. Base)	95g (140g)			
Color	Ivory			

Compatible Bases

YBN-R/4, YBN-R/4C, YBN-R/4SK, YBK-R/5, YBK-R/5SK, YBK-R/5ZD, YBK-R/5R2
YB0-R/5, YBO-R/5SK, YBO-R/5ZD, YBO-R/5R2, YBO-R/4C

Unit : mm

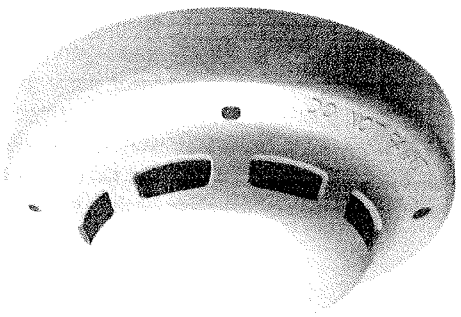

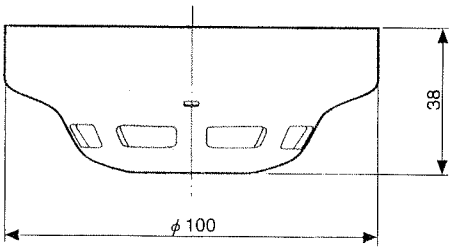

Fig. 1

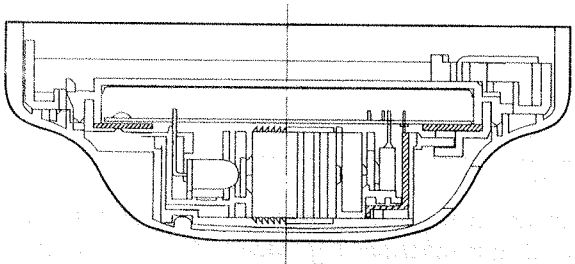

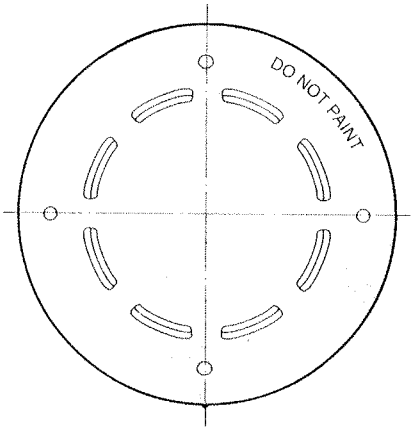

PYROGARD TECHNOLOGIES PTE LTD
Blk 30 Kallang Place #06-21 to 24 Singapore 339159
Tel : (65) 6291 4288 Fax : (65) 6296 8180 / (65) 6296 4340
Email : sales@pyrogard.com.sg

Certified to ISO 9002 Quality Standards Cert. No. 30699

Photoelectric Smoke Detector : SLR

Features

1. The new SLR series of Photoelectric Smoke Detector has been designed with a unique "Flat Response Technology", enabling the detector to be equally sensitive to a much wider range of combustible materials.
2. The overall flat response of the SLR series eliminates the need to use Ionization Detectors in the majority of applications, thereby providing a simpler solution for system designer.. This has also enabled the detector threshold level to be increased, thereby improving the signal to noise ratio and reducing susceptibility to false alarms.
3. The Hochiki SLR Photoelectric Smoke Detector has been designed with a one piece outer cover which gives an aesthetically pleasing modern low profile shape that will comply exactly with interior design requirements and/or customer needs without detracting the appearance of the ceiling.
4. Each detector is equipped with twin fire alarm LED indicators that allows 360 degree viewing. The light from the LEDs is transmitted via unique light guides which is achieved by the LEDs being sealed on the PCB for increased protection and reliability.
5. The design features a light source which pulsates rather than emitting light continuously, thus reducing the overall power consumption of the detector. This allows more detectors to be used with each control panel.
6. All circuitry in the detector head are metal shielded to enhance operation efficiency and to reduce adverse influence from outside noise and electrical fields.
7. To provide protection against deterioration in performance resulting from dirt, dust or flying insects entering the inside of the unit, a wrap-around shield of fine, custom-designed stainless steel mesh is used inside the detector head.

Principle of Operation

The operation of the SLR Photoelectric Smoke Detector is based on the phenomenon that the amount of light incident upon a photo-diode by a LED varies proportionately to the density of the smoke particles within the detection region. The detection chamber consist of an LED and photo-diode arrangement. The chamber utilizes a unique baffle design which allows smoke to enter the chamber while keeping out ambient light. It is also designed such that light emitted by the LED cannot normally reach the photo-diode. When smoke particles enter the chamber the light is scattered and some of this light falls on the photo-diode. This is converted into electronic signal, filtered and then used to trigger the internal latching circuit.

Application

The Hochiki SLR Photoelectric smoke detector is particularly suited to detecting optically dense smoke typical of fire involving material such as soft furnishing, plastic, foam or other similar materials which tend to smolder and produce large visible smoke particles. Equipped with the latest "Flat Response Technology", the SLR allows fast response to flaming fires as well as smoldering fires while eliminating false alarms. It can be installed in areas where traditionally both photoelectric and Ionization detector have been used

Maintenance

The SLR can be fitted onto a range of common mounting base which allows easy detector interchange. A simple anti-tamper locking mechanism is provided which is enabled by removing a small plastic lug on the back of the detector. Once locked the head can only be removed using a special head removal tool. The detector also has a removable chamber which can be easily cleaned or replaced, hence simplifying maintenance.

KL-710
Rate-of-Rise / Fixed Temp Conventional Heat Detector

Features

- Proven quality, reliability, and functionality
- Special base compensates for uneven surfaces
- Attractive, low-profile design
- Twin LEDs for 360° viewing
- Approved by LPCB and VdS

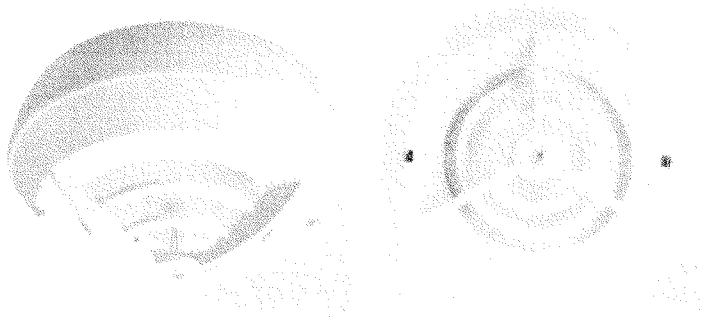

General Description

Because of their attractive design and advanced features, the 700 series of conventional fire detectors easily stand out from the competition. Detection hardware has been specifically designed to cope with the most difficult and extreme situations - safety always comes first.

With LPCB and VdS certifications marks, the detectors have been designed with the most advanced technology and a single objective - the guarantee of completely reliable detection in every risk situation. The 700 series of detectors are manufactured under strict ISO 9001 Quality Standards by Kilsen SpA .

Specifications

MECHANICAL

Dimensions :..... 45 x Ø99 mm
Mounting Base ..... Z700 : Ø 103mm
Terminals : .....Screw and Washer
Wire cross-section .....1.5 mm^2
Protection Index ..... IP 205
Coverage (see EN 54-7 guidelines) .....20 ~ 30 m^2
Installation Height ..... < 7.5 m
Fixing Screws (depends on ceiling type).. 2 x 35 mm
Installation piping : ..... Ø 20 mm

ELECTRICAL

Supply Voltage : .....18 ~ 28 VDC
Fixed Voltage in Alarm ..... 8 ~ 10 VDC
Standby Current : ..... 70 µA
Alarm Current .....< 100 mA
Remote-pilot-light input current .....< 100 mA
Sensitivity : ..... According to UNE 23007/5, EN 54-5
EMC Standards : .....EN 50130-4, EN50081-2
Operating Temperature : ..... -10 ~ 70 °C
Storage Temperature : ..... -10 ~ 80°C
Maximum Relative Humidity : 95%

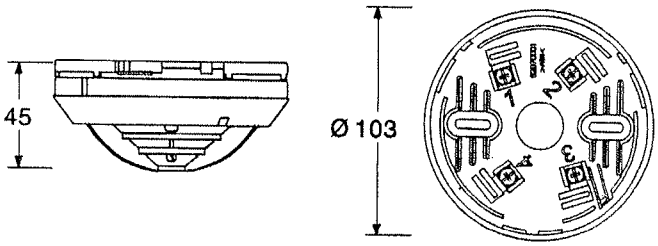

The manufacturer reserves the right to modify dimensions or characteristics without previous notice.

PYROGARD TECHNOLOGIES PTE LTD
Blk 30 Kallang Place #06-21 Singapore 339159
Tel : (65) 2914288 Fax : (65) 296-8180 / (65) 296-4340
Email : sales@pyrogard.com.sg

Certified to ISO 9002 Quality Standards Cert. No. 30699

KL-730
Conventional Optical Smoke Detector

Features

- Proven quality, reliability, and functionality
- Special base compensates for uneven surfaces
- Attractive, low-profile design
- Twin LEDs for 360° viewing
- Approved by LPCB and VdS

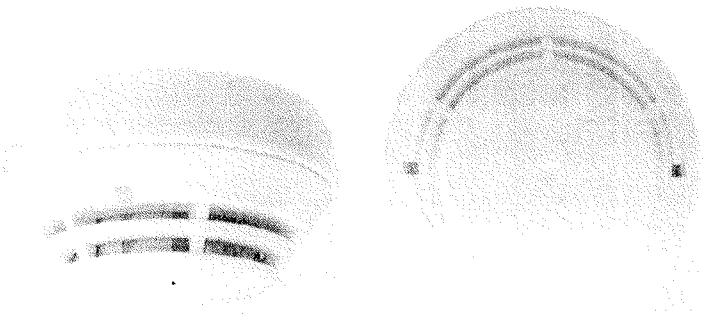

General Description

The KL-730 Optical Smoke Detector works by light scattering due to smoke presence (Tyndall effect) and complies with the EN 54-7 standard. Detection hardware has been specifically designed to cope with the most difficult and extreme situations - safety always comes first.

With LPCB and VdS certifications marks, the detectors have been designed with the most advanced technology and a single objective - the guarantee of completely reliable detection in every risk situation. The 700 series of detectors are manufactured under strict ISO 9001 Quality Standards by Kilsen SpA .

Specifications

MECHANICAL

Dimensions :..... 45 x Ø99 mm
Mounting Base ..... Z700 : Ø 103mm
Terminals : ..... Screw and Washer
Wire cross-section .....1.5 mm^2
Protection Index ..... IP 205
Coverage (see EN 54-7 guidelines) .....20 ~ 30 m^2
Installation Height ..... < 12 m
Fixing Screws (depends on ceiling type).. 2 x 35 mm
Installation piping : ..... Ø 20 mm

ELECTRICAL

Supply Voltage : .....18 ~ 28 VDC
Fixed Voltage in Alarm ..... 8 ~ 10 VDC
Standby Current : ..... 85 µA
Alarm Current .....< 100 mA
Remote-pilot-light input current .....< 100 mA
Sensitivity : ..... According to UNE 23007/7, EN 54-7
EMC Standards : .....EN 50130-4, EN50081-2
Operating Temperature : ..... -10 ~ 60 °C
Storage Temperature : ..... -10 ~ 70°C
Maximum Relative Humidity : 95%

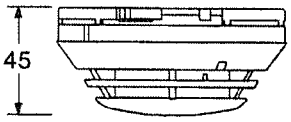

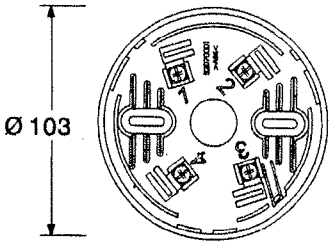

The manufacturer reserves the right to modify dimensions or characteristics without previous notice.

PYROGARD TECHNOLOGIES PTE LTD
Blk 30 Kallang Place #06-21 Singapore 339159
Tel : (65) 2914288 Fax : (65) 296-8180 / (65) 296-4340
Email : sales@pyrogard.com.sg

Certified to ISO 9002 Quality Standards Cert. No. 30699

PYROGARD

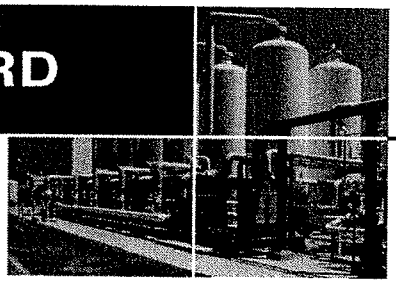

Providing Solutions In

FIRE PROTECTION & DETECTION

for the New Millennium

International Project References

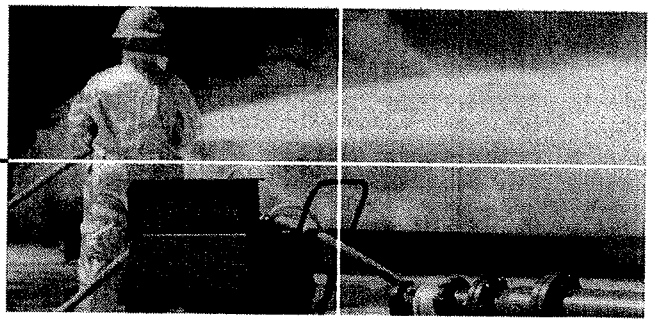

Blk 30 Kallang Place #06-21
Singapore 339159
Tel : 2914288 Fax : 2968180
Email : sales@pyrogard.com.sg
URL : www.pyrogard.com.sg

PYROGARD

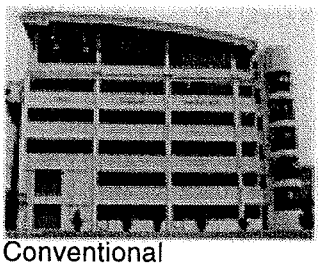

CHIJ Toa Payoh

Schools

Catholic Junior College, Singapore	Conventional
Yishun Junior College, Singapore	Conventional
Chestnut Drive Secondary School, Singapore	Conventional
Swiss Cottage Secondary School, Singapore	Conventional
Jurong Secondary School, Singapore	Conventional
West Lake Secondary School, Singapore	Conventional
Serangoon Secondary School, Singapore	Conventional
Serangoon GardenSecondary School, Singapore	Conventional
Bukit Batok Secondary School, Singapore	Conventional
Rangoon Secondary School, Singapore	Conventional
Boon Lay Secondary School, Singapore	Conventional
Yuan Ching Secondary School, Singapore	Conventional
Teck Whye Secondary School, Singapore	Conventional
CHIJ Toa Payoh, Singapore	Conventional
Queensway Secondary School, Singapore	Conventional
St Hilda's Primary School, Singapore	Conventional
Greenridge Primary School, Singapore	Conventional
Stamford Primary School, Singapore	Conventional

Religious Centers

Queen of Peace Catholic Church, Singapore	Conventional
Jubilee Church, Outram Rd, Singapore	Conventional
Kwang Ming Shan Temple, Singapore	Conventional
Jalan Sayang Mydin Mosque, Singapore	Conventional
Lorong Marzuki Mosque, Singapore	Conventional

Housing Development Board (HDB) Singapore

Bukit Merah RC41	Conventional
Sembawang N5 C2	Conventional
Bukit Merah RC33A	Conventional
Sengkang N1C25	Conventional
Choa Chu Kang N6C16	Conventional
Choa Chu Kang N2C3A	Conventional
Punggol West C4	Conventional
Hougang N9C14	Conventional
Punggol East C22	Conventional
Sengkang N4 C1	Conventional
Woodlands N2 C7	Conventional
Woodlands N2 C6	Conventional

PYROGARD

Commercial Buildings

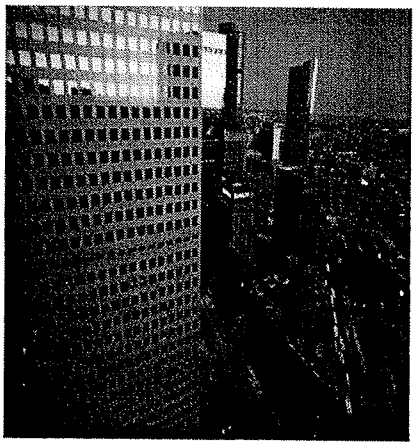

Manila Duty Free Center, Philippines	Addressable
Sumitomo Thaniya Office Building, Thailand	Addressable
Woodlands Centre Shopping Complex, Singapore	Conventional
NUS Digital Laboratories, Singapore	Conventional
KLIA Malaysia Airlines Kargo Complex, Malaysia	Conventional
Port of Singapore Authority (PSA) HQ Building, Singapore	Addressable
Popular Book Store, Crown Prince Hotel, Singapore	Conventional
Kallang Pudding Warehouse, Singapore	Conventional
National Sailing Centre, East Coast Parkway, Singapore	Conventional
Teo Garment Corporation, Singapore	Conventional
Prospec (Sugei Kadut) Factory, Singapore	Conventional
Kong Guan Dumpling Factory, Singapore	Conventional
SIMEX at OUB Centre, Shenton Way, Singapore	Conventional
OCBC Centre, Shenton Way, Singapore	Conventional (FM200)
Singapore Recycling Centre	Conventional
Sembawang Sea Sports Centre, Singapore	Conventional
Tampines Sports Hall	Addressable
Police Academy, Singapore	Conventional
FDK Lanka Factory, Sri Lanka	Conventional
Vicom Vehicle Test Center, Singapore	Conventional
Yew Tee Community Centre, Singapore	Conventional
Keng Hwa Building, Singapore	Conventional
Xin Xin Packaging, Singapore	Conventional
Eastwood Shopping Complex, Singapore	Conventional
Ren Ci Hospital, Singapore	Conventional
Arena Country Club	Conventional

PYROGARD

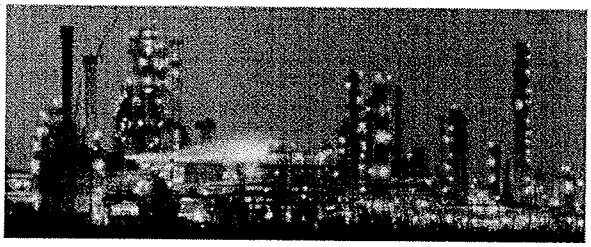

Petrolchemical Plants

Petroleum Authority of Thailand Pipeline, Thailand - Siemens Engineering	Conventional c/w remote control
Mobil Oil Refinery, Singapore - Toyo Engineering	Conventional
Chevron Oil Refinery Project, Pulau Sakra, Singapore - Chiyoda Corporation	Conventional
Singapore MMA & Acrylic Group (SMAG) Plant, Pulau Sakra, Singapore	Conventional
Sumika MMA Polymer Plant, Pulau Sakra, Singapore - Chiyoda Corporation	Conventional
PA Plant, Pulau Sakra, Singapore - Mitsui Engineering & Ship Building Corp	Conventional
Jurong Island Fire Station, Singapore (serving Petrolchemical Plants)	Conventional
Sumitomo Chemical, Pulau Sakra, Singapore	Conventional
Unicorn Oil Company	Conventional

Military Installations

US Navy Base, Yokosuka, Japan - Mitsuwa Corp	Conventional
US Naval Hospital, Yokosuka, Japan - Mitsuwa Corp	Conventional
Iwakuni Air Force Base, Japan	Conventional
Sembawang Air Base - Fuel Storage Facility, Singapore	Conventional
Tuas Naval Base, Singapore	Conventional
Lentor Camp, Army, Singapore	Conventional
Gurhka Camp, Singapore	Conventional

PYROGARD

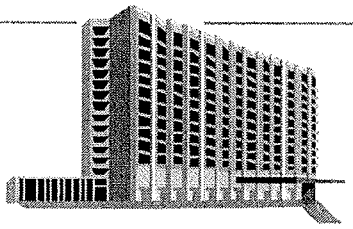

Hotels

Hilton International Resort, Rangali Island, Maldives	Conventional
Amara Hotel, Singapore	Conventional
Rasa Sentosa Shangri-la Resort, Singapore	Conventional
Peninsula Hotel, Jakarta, Indonesia	Addressable
Ibis Hotel, Jakarta, Indonesia	Conventional
Hotel Sedona, Bintan, Indonesia	Addressable
Shangri-la Regency Yangon, Myanmar	Conventional
Happy Star Hotel, Singapore	Conventional
Century Hotel, Singapore	Conventional
Kanuhura Resort, Maldives	Conventional
Cocoa Resort, Maldives	Conventional
Gasfinohlu Resort, Maldives	Conventional

Banks

Philippines Savings Bank HQ, Manila, Philippines	Addressable
Bank of Maldives, Maldives	Conventional
NG Baring Securities, Jakarta, Indonesia	Conventional (FM200)
ING Baring Bank, Jakarta, Indonesia	Conventional (FM200)
BII Bank, Jakarta, Indonesia	Addressable
Metro Bank HQ & Annex, Manila, Philippines	Addressable

Condominiums

Simei Green, Singapore	Conventional
Valencia Hills, Philippines	Addressable
Pangeran Jayakarta, Indonesia	Conventional
Palm Gardens, Singapore	Conventional
Robin Road Apartments, Singapore	Conventional
Sixth Avenue Ville, Singapore	Conventional
The Waterside, Singapore	Conventional
The Mayfair, Singapore	Conventional
Chelsea Lodge, Singapore	Conventional
The Moonstone, Singapore	Conventional
The Springside, Singapore	Conventional
Cuscaden Condominium, Singapore	Conventional
Balmoral Crescent, Singapore	Conventional
Gallop Court, Singapore	Conventional

PYROGARD

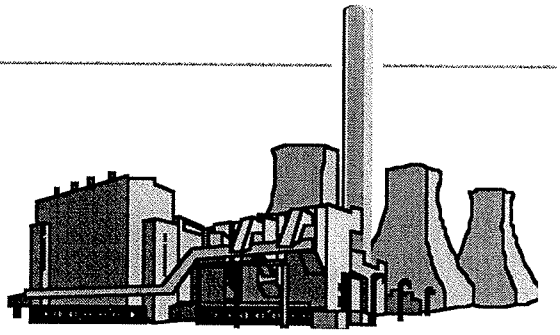

Industrial Plants

Petronas Fertiliser Plant, Kedah, Malaysia	Addressable Main Console with Computer Graphics Conventional (FM200)
Petronsas Kerteh Vinyl Chloride Monomer Plant, Terengganu, Malaysia - Toyo Engineering Co.	Addressable Conventional (CO_2)
Qafac Methonol / MTBE Facility, Qatar - Chiyoda Corporation	Conventional
Gresic Copper Smelting Plant, Indonesia - Chiyoda Corporation	Conventional
Zeon Chemical Plant, Thailand - Chiyoda Corporation	Conventional
Saudi Aromatics Plant, Saudi Arabia - Chiyoda Corporation	Conventional
Bestway Cement Plant, Pakistan - Chiyoda Corporation	Conventional
Teijin Polycarbonate Plant Phase I, Singapore - Chiyoda Corporation	Conventional
Nippon Jordan Fertilizer Plant, Jordan - Chiyoda Corporation	Conventional
Anker Bekasi Brewery, Indonesia	Conventional
PFP Merak Plant Project, Indonesia	Conventonal
Bangchak Expansion Project (Ex-proof), Thailand - Mitsui Engineering & Ship Building Corp	Conventional
Container Crane Project, Oman - Hochiki Corporation	Conventional
Pulau Seraya Chemical Plant, Singapore	Conventional
KPI Project, Indonesia	Addressable
Teijin Polycarbonate Plant Phase III, Singapore - Chiyoda Corporation	Conventional
Singapore Technologies Marine Ltd, Singapore	Conventional
Mitsui Elastomers Plant, Singapore	Conventional

PYROGARD

Jurong Town Corporation (JTC)

JTC Bukit Merah Block 1093, Singapore	Conventional
JTC / Power Grid Sub Station, Woodlands Link, Singapore	Conventional
JTC / Power Grid Sub Station, Tuas, Singapore	Conventional

Power Station / Sub-station

Power Grid, St James District, Singapore	Conventional
Power Grid, Chua Chu Kang Sub-station, Singapore	Conventional
Power Grid, Aida Sub-station, Singapore	Conventional
Power Grid, River Valley 66 Kv Sub-station, Singapore	Conventional
Sapugaskanda Power Station (World Bank Project), Sri Lanka - MAN B & W	Addressable

Approvals

Underwriters Laboratories Inc. (UL), USA	AX8
PSB Type Test - BS 5839 : Part 4 : 1988, Singapore	AX8 / MX200
PSB Type Test - SS CP 10 : 1993, Singapore	AX8 / MX200
SIRIM Type Test, Malaysia	AX8
Bomba, Fire & Rescue Department, Malaysia	AX8
Fire Services Department, Hong Kong	AX8 / MX200
BVQI - ISO 9002 Quality Standards	AX8 / MX200

On Approved Vendor List of :

Chiyoda Corporation (Japan)
Toyo Engineering Corporation (Japan)
Mitsubishi Heavy Industries (Japan)
Mobil Oil Singapore Pte Ltd
Chevron Oil Company (S) Pte Ltd
Petronas National Oil Company, Malaysia
Housing Development Board, Singapore

Original Equipment Manufacturer for :

Hochiki Corporation of Japan
Honeywell Corporation, Singapore
Chubb, Singapore
Johnson Controls, Singapore / Thailand