ELID TECHNOLOGY
INTERNATIONAL PTE LTD

CONTENTS:

1 COMPANY PROFILE

2 SYSTEM OVERVIEW

3 TENDER SPECIFICATION

4 TECHNICAL DATA

5 INSTALLATION & SYSTEM CONFIGURATION MASTER LIST

6 SITES REFERENCE

7 PRODUCT BROCHURE

ELID TECHNOLOGY
INTERNATIONAL PTE LTD

COMPANY

PROFILE

ELID TECHNOLOGY
INTERNATIONAL PTE LTD

Blk 105 Boon Keng Road #06-10 Kallang Basin Industrial Estate
Singapore 339776 • Email : elids@singnet.com.sg
Tel : (65) 295 2218 • Fax : (65) 295 2282

Cert. No: QSP00129

ELID TECHNOLOGY INTERNATIONAL PTE LTD Incorporated in the year 1993 has been very instrumental in providing the State-of-Art Security Access Equipment for some of the most Prestigious Projects in the Landmark of Singapore.

As a **Direct Manufacturer** for the ELID Card Access Control System, Electronic Guard Tour System and Flap Barrier System are among our Range of Fine Products, we have an instantaneous advantage over our nearest competitor in terms of Product Availability, Pricing, Technical Support and Servicing.

Elid specialize in supplying and installing a full range of the Card Access System that includes the Keypad, Magnetic, Proximity, Bar Code, Contact and Contactless Smart Card Readers for Industrial and Commercial Industries.

A brief profile on the Company present Range of the Security Systems is as follows:

Company Product Line

Access Control Systems

1. Card Access Control System
   (Includes the Magnetic, Proximity, Bar Code, Contact/Contactless Smart Card and others)
2. Short & Long Range Proximity Reader for Car Park
   (Reading range up to 3 meter)
3. Lift Access Control System

Time Management Systems

4. Electronic Guard Tour System
5. Time Recording & Management System
6. Finger-Scan System

Security & Surveillance Systems

7. Closed Circuit Television (CCTV) Surveillance System
8. Remote Surveillance System
9. Integrated Security Alarm System
   (Paging or Central Alarm Monitoring Service)
10. Audio/Video Intercom System

Car Park & Passenger Control Systems

11. Auto Swing & Sliding Gate System
- Car Park Barrier
- Industrial Gate Barrier
- Trackless Slide gate
- Industrial Swing gate

12. Turnstile & Flap Barrier System
- Full Height Turnstile
- Tripod Turnstile
- Single & Double Flap Turnstile
- Pedestrian Flap Barrier
- Revolving Door

Specialized Area of Applications:
Airport Terminal
Train Station
Passenger Terminal
Ferry Terminal
Checkpoint
Sports Stadium
Recreational Facilities
Factory Production Area
Administration Building

Among the more established installations are:
Changi Airport
Immigration Department (Woodlands & Tuas)
to name, but; just a few.

Technical & Engineering Services
Our "Round The Clock" Technical Support includes the following:
1. Telephone Support Service
2. Fax & Email Support Service
3. Time Cost Support Service
4. On Site Support Service

The above ensures that the products that belongs to all our Client are to be well serviced at all times and that they will be able to set their mind at ease to concentrate on other areas of interest that is to benefit their Organization.

Elid, renowned for its Fine Range of Products specializes in supplying and installing a full range of the Card Access Control System catering to the Government, Industrial and Commercial Industries.

The Area of Specialization in the Supply and Installation in a wide range of the Security Systems are, but; some of the products that we are presently providing to suit the minimum needs of our Clients. In our continuing effort to serve our Clients BETTER in the Specific Areas of Needs, we are constantly on the lookout for New and Innovative Products deemed to be Professionally viable to suit One and All.

Our Business Partners
Projects Secured and Completed by ELID Technology International Pte Ltd:
Client
Banking & Finance
Bank of East Asia
DBS Branches (All Branches In Singapore)
UOB (Tiong Bahru)

Major Building
Republic Plaza (Tower 1 & 2)
Prudential Tower
Prime Field
Hong Leong Corporation
The Heeren
Great World City
China Square

Government
TCS
Telecom Equipment
PSA
Ministry of Defence
CAAS
Meteorological Office
Pidemco
Safra

Hotel
Marina Mandarin Hotel
Hotel Plaza

Institution
Ngee Ann Poly
S'pore Poly

Others
Costa Sand Resort
Peach Garden
Seagate
Baxter Health Care
ST Assembly
Hitachi Nippon Steel
Shell

Company Products:
Door Access
CCTV
Alarm
On Time Management System
Guard Tour System
Car Park & Passenger Automation

With the expertise, experience, as well as the confidence and endorsement by the above, which are; but, a few of our clientele base, we believe we will be in a position to service your needs professionally to the ultimatum satisfaction.

Attached are relevant Brochures of our Fine Range of Products with which we believe will be of interest to you. Your kind attention to the Elid Fine Range of Products is greatly appreciated and we will be more than pleased to be able to meet up with you for a general discussion to enlighten you further.

We believe the above will be able to meet your requirement and we do look forward towards a favorable response from you soon. Please feel free to contact the undersigned if you should require any further assistance or clarification to this matter.

Yours faithfully,
ELID TECHNOLOGY INTERNATIONAL PTE LTD

Dennis Lim
Managing Director

SGS Yarsley
International Certification Services

Certificate Number

QSP00129

This is to certify that the
Quality Management systems of

Elid Technology International Pte Ltd

Singapore

have been assessed and registered as meeting the requirements of ISO 9001

The scope of registration is detailed on the Assessment Schedule bearing this certificate number.

SGS Yarsley International Certification Services
Signed by

Original registration date 3 January 2001 Certificate issue date 3 January 2001

This certificate remains valid subject to satisfactory maintenance of the system for 4 years from the above certificate issue date.

SGS Yarsley International Certification Services
is a division of SGS United Kingdom Ltd
Registered in England No. 1193985
Registered Office:
SGS House, 217/221 London Road,
Camberley, Surrey GU15 3EY, United Kingdom

Whilst all due care and skill was exercised in carrying out this assessment SGS Yarsley ICS accepts responsibility only for proven gross negligence. This is not a legal document and cannot be used as such. The use of the Accreditation mark shown on this certificate indicates accreditation in respect of those activities covered by that Accreditation Authority. This certificate is an accredited certificate issued under the accredited scope granted to SGS Yarsley ICS by UKAS, Registration No. 005. This certificate remains the property of SGS Yarsley ICS to whom it must be returned on request.

005

ELID ORGANIZATION CHART

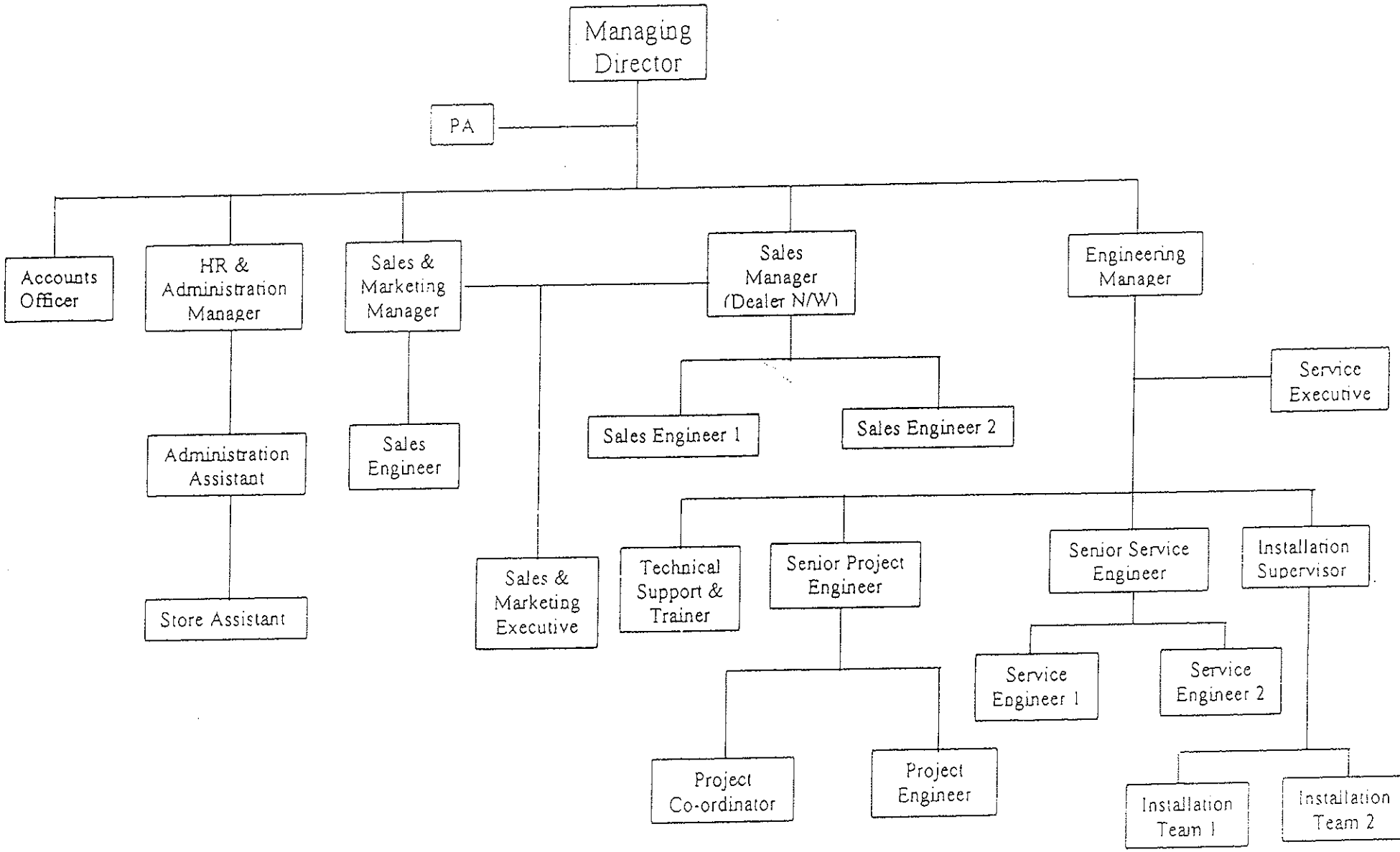

INFOCOMM DEVELOPMENT AUTHORITY OF SINGAPORE
8 Temasek Boulevard #14-00 Suntec Tower 3 Singapore 038988 Tel 65-211 0888 Fax 65-211 2222 www.ida.gov.sg

iDA SINGAPORE

ELID TECHNOLOGY INTERNATIONAL PTE LTD
Blk 105 Boon Keng Road
#06-10 Kallang Basin Industrial Estate
Singapore 339776

TYPE APPROVAL CERTIFICATE

TAC No : LPREQ-0175-2001

This is to certify that the equipment described hereunder has been approved by the Infocomm Development Authority of Singapore (IDA) for sale and use in Singapore subject to the conditions specified overleaf.

EQUIPMENT DESCRIPTION

Type of Equipment	: Induction Loop Communication Systems (Spec 7)
Trade Name	: Cryptag Census
Model No.	: CR1-A
Manufacturer	: Identec Ltd., England
Frequency Range	: 16 - 150 kHz
RF Power Output	: < 100μV/m @ 30 metres
Type of Modulation	: BPSK
Date of Issue	: 11 April 2001
Date of Expiry	31 March 2006

WONG YAU LIONG
for DIRECTOR-GENERAL
INFOCOMM DEVELOPMENT AUTHORITY OF SINGAPORE

ELID TECHNOLOGY
INTERNATIONAL PTE LTD

SYSTEM OVERVIEW

ELID TECHNOLOGY
INTERNATIONAL PTE LTD



EsofNET INTEGRATED SECURITY MANAGEMENT SYSTEM

Overview

EsofNET is a next-generation integrated security system, specifically designed to meet the stringent yet flexible security needs of today's intelligent buildings. Today's medium-to-large scale buildings require a security management system to monitor, track and control events. Such a system would need to operate as a fully integrated network, in order to provide reliable and cost-effective centralized control.

ELID has offered such integrated solutions over the years using computerized systems whose capacity, flexibility and sophistication make them suitable for virtually any application. ***EsofNET*** has been developed to handle and manage any critical & abnormal situation. As the ***EsofNET*** system is modular and scaleable in size, the system is expandable from a simple single-device monitoring system to a thousand of them. Furthermore, it does not remain static but changes to follow the current advancement in the micro-electronics and computer industries.

EsofNET has the capability to integrate a variety of building management system functions according to the requirements of the user, including but not limited to:

a) Door Access Control System
b) Alarm Monitoring System
c) Car Parking System
d) Lift Access Control System
e) Time Management System
f) Visitor Management System
g) Guard Tour System
h) Photo ID Production System
i) Messaging System
j) Asset Management System
k) CCTV Monitoring System

EsofNET provides users with a wide range of optional functions and capabilities, catering for anything from the simplest to the most demanding applications.

Integrated Security System Software

Operating System
EsofNET runs on Windows NT/Windows 2000 operating system with a 32-bit Client-Server based SQL database server. It supports up to 32 workstations which links to the Server via Ethernet bus using TCP/IP protocols. Since ***EsofNET*** is ODBC compliant, it is flexible and able to share common databases with other application software packages.

System User Friendliness
Security personnel can operate ***EsofNET*** with minimal difficulty as the system fully utilizes the widely used windows-based Graphic User Interface. That means that most of the operations of the system can be performed with just a point and click on the mouse.

Distributed Processing
EsofNET is a fully intelligent, distributed processor system which expandable from a system with a single door, to a system with up to:

- 1,024 Card Readers
- 1.024 Field Devices
- 100,000 Cardholders
- 1.024 Access Levels
- 16,000 Alarm Input Points
- 32,000 Output Points
- 32 Workstations

Site Plan Configuration
With on-screen site plan configuration, the user can easily drag symbols that represent readers, alarm points and output points, and drop them to the actual location on the plan. This means that configuration of the system is an easy as arranging symbols on the screen. ***EsofNET*** imports standard Windows and graphic files in BMP and JPEG format.

Large Cardholder Database
EsofNET caters up to 100,000 cardholders. All fields in the cardholder records are indexed and permit quick database searching for specific records and report generation/printing functions.
The cardholder database also support cardholder photo images which can be captured through a live video camera or Twain scanner. Optionally the photo images can be imported from graphic files namely, BMP, JPEG, TIFF, etc.

Real-Time Monitoring
Activities occurring at the card readers are reported immediately and displayed on the on-line screen. On occurrence of an alarm or abnormal transaction, the operator is immediately alerted by the activation of highlighted visual prompts on the computer display as well as an audible alarm.

Access Security
There are 16 access priority levels, which can be assigned to a user. Each of these levels defines the authority of the operator to access information, print reports and issue system commands. Access security is to minimize confusion for low level operator and to protect sensitive information. User activities can be logged and be retrieved for report generation by authorized personnel.

System Wide Anti-Passback
On higher security systems or where tracing the exact whereabouts of cardholders is important, access would not be allowed more than once consecutively for entry or likewise for exit.

EsofNET provides for local door and multiple door control for anti-passback. For system wide anti-passback, ***EsofNET*** can define up to 64 zones.

Global Timer and Time Zones
EsofNET provides 2,048 global timers and 2,048 global time zones. Automatic functions on the Timers, Access Time Zones and Lock Release and Pin Disable time zones could be activated globally during selected time periods.

Event Driven Controls
Events generated by input points or reader controllers can be used to perform controls on any of the I/O devices in the ***EsofNET*** system. These controls can be performed based on individual points or as a group or zone. The system is able to define up to 512 events.

Alarm Processing
EsofNET provides a comprehensive alarm processing facility to handle different types of input devices. In the event of an alarm, full details of the alarm can be viewed including a pre-programmed instruction prompt for the operator on what to do during such an event.

The operator can acknowledge, arm or disarm the alarm based on the pre-programmed instruction displayed. A facility is also provided for the operator to enter comments and actions taken in response to the event. Actions takes by the operator are logged with the alarm data and a full historical profile of the alarm event can also be retrieved for later analysis.

Context Sensitive Help
The system on-line context sensitive help will give a helping hand when need arises. No more searching through indexes for explanation or recommendations.

Area Trace
Area Trace is a standard feature of ***EsofNET*** that allows the operator to identify occupied areas within the premises, along with details of the area occupants. An Occupancy report, which list out the cardholders currently residing in any defined area, can also be generated for reporting purposes.

Locating Card Holder
Locate a cardholder in a premises fully covered by the system by checking that cardholder's last door transaction location.

Video Comparison and Verification
The photo images of registered cardholders can be displayed automatically when a transaction is received or manually by clicking the previous transactions. This allows the operator to make comparisons with the image feed from a CCTV monitor easily.

Database Export Facility
Cardholder database and transaction files can be exported in ASCII, DBF or other standard database formats. The exported files may be used by third party software packages for advanced database queries or for further processing.

Data Backup
EsofNET allows the administrator to freely back up the central database system at any time and from any **EsofNET** workstation according to the database backup protocol of the organization.

Front End Processors

A Reader Processing Unit (RPU) controls reader devices and sends/receive information to and from the EsofNET system. Each EL80/2 RPU can support up to 64 reader controllers as well as 16 input and 8 output points.

Data Gathering Panels receive information and sends instructions between alarm/sensor devices and the EsofNET system

The Intelligent Processing Unit (IPU) handles the data communication and management functions over a mixed combination of alarm, sensor and reader devices for the EsofNET system.

EsofNET INTEGRATED SECURITY MANAGEMENT SYSTEM MODULES

Time Management System Module

This module makes use of door access transaction data to perform attendance taking, eliminating the need for a separate time clock system.

The TMS Module can be programmed to monitor access times at particular readers for every individual **EsofNET** cardholder. It can check for absenteeism, late arrivals, early departures, break/out-of-office periods, work shifts, etc. It can also calculate each day's total amount of time worked, overtime periods, etc. Any results out of a user-defined acceptable range will be highlighted on the TMS Module screen as well as on generated reports.

An operator of the system is also able to generate summarized reports on absenteeism, lateness, undertaken overtime, and daily earliest clock-in-time or latest clock-out-time sorted according to a user-specified day, month or year, This data can be exported to third-party software, generally for payroll processing purposes. Generated reports can even be electronically mailed as an alternative to printing them on paper. All attendance reports are integrated with taken holidays, leave and shift data.

Additionally, the employee attendance records are neatly organized on-screen, sorted according to department in a simple tree chart structure. Annual holidays, leave days and even shifts can be planned out for individual employees on a monthly diary sheet layout, providing a comfortable visual management plan for human resource managers.

Messaging Module

Coupled with the availability of access controllers with alphanumeric displays, the Messaging module enables personal short messages to be sent to door-access users at any authorized door access points in a premises. This provides an alternative method of non-intrusive electronic communication.

Short messages can be conveniently sent to a recipient "according to suitable timing required by sender" while a recipient may receive several messages in any one time. Spatial storage of messages is compromised. Messages are managed and stored in the duration according to customizable requirement, while messages that are read can be automatically erased and synchronized between central database and access controllers.

Historical records of messages that include date/time stamps, sender and recipient can also be printed for tracking purposes.

Guard Patrol Tour Module

From the Security Room, the Guard Patrol Tour Module plays the role of a monitoring eye on tour guards on their rounds. This module delivers a graphical display of the guard tour in progress on a floor plan to the system operator, activating tour registering-point icons and audio alarms on the floor area as an additional security facility to tour guards. The system can also be used in conjunction with independent camera utilities.

The Guard Patrol Tour Module carries out continuous recording of guard tour information, such as touring guards' identity, date, time, tour-point and floor details while comparing them with expected tour timing and location.

All this information is communicated in real-time to the system operator, hence affording a better warrant for alarm and emergency response in the event of any security breach or unexpected threat to the personal safety of tour guards, especially in large premises with complex floor layouts and tour routes.

Visitor Manager Module

For premises with a high frequency of visitors with limited access rights into secure areas, the Visitor Manager module provides efficient management and tracking of card issuance, access patterns and card expiry, while giving instant and flexible facilities for lost, recoverable and recycling of cards. This is especially suitable to hotels or premises with high visitor traffic, where the frequent and instant enabling/disabling of access cards to particular areas are part of the security requirements.

The software's information management system also facilitates the reporting of every recorded access, card profiles, system login/logout and individual name of computer workstation for record keeping and auditing purposes.

Asset Management Module

The Asset Management module uses the bar coding system for the identification and cataloging of mobile assets. It provides a simple solution to tracing the movement of bar-coded property by associating them with the cardholder information of the person who requisitions a particular asset, allowing direct recording and traceability of "who-used-what-and-when" information, how long a particular asset has been in use, whether it is overdue, etc.

The software provides a facility for the categorization and inventory of mobile assets as well as changes in the condition or status of these assets. A system operator can generate a comprehensive report on current stock inventory, daily item transactions or outstanding items, without the need to manually compile information from various logbooks. This module also cuts down on the need to manually verify the state of all assets to periodic audit checks of the records. In short, this module is a one-stop asset management solution.

Photo-ID Badging Module

This system consists of an integrated set of three major components: a TWAIN-compatible image import facility, a card layout designer and a printer interface compatible with most third party card printers. This allows for the instant generation of ready-to-use access-ID electronic card of any format on the market. It is in especially high demand at institutions or organizations where large batches of non-recyclable access-ID cards have to be generated on a periodical basis.

Similar to other ***EsofNET*** modules, this software module operates using the central database of the integrated security management system and thus liberating the need of repetitive data input relating to personal information of individual access users.

The card layout designer software allows for convenient card appearance editing. This includes picture adjustments on size, contrasts, and color, design/creation/saving of card templates and even the selection of ID related information. All these supporting utilities are offered in a standard Window graphic user interface environment, making learning and operation easy.

CCTV Control and Monitoring Module

The CCTV Control and Monitoring Module allows the integration of image feeds from CCTV cameras into the EsofNET system through a TCP/IP LAN connection. This allows system operators to perform image comparison checks for access control as well as monitor activity at sensitive areas of a floor plan. The CCTV module can handle a variety of CCTV equipment configurations, both hardware and software, providing flexible cost control as well as the ability to exactly conform to customer requirements.

The CCTV module operates in either a local or wide area-networking infrastructure, receiving by way of either a software-based or hardware-based video feed server and client viewer. The video server gathers digital images from its connecting group of cameras or video cameras via a multiplexer. These digital images are then fed to the client viewer, typically through media player software at a PC workstation. An Internet browser may also replace the client viewer to view image feeds from cameras.

The CCTV Module client viewer software possesses the basic ability to control remote cameras via the video server connection. Functions such as sequential display switching, pan-tilt-zoom operations for capturing a particular image angle are possible depending upon the equipment configuration. Specific camera feeds can also be automatically triggered according to predefined reactive instructions in association with access controllers. Thus, a server can be instructed to automatically stream the image feed to a particular PC station upon the occurrence of an abnormal condition at an access point. The client viewer in turn has the ability to trigger an alarm if the needs arise.

The CCTV module also provides an audit trail function to record and report every single activity undertaken within the capturing boundary of the CCTV software system for security management purposes.

ELID TECHNOLOGY
INTERNATIONAL PTE LTD



MATRIX® V INTEGRATED SECURITY MANAGEMENT SYSTEM

The Matrix V Integrated Security Management System (ISMS) is Elid Sdn Bhd's premier security management system for advanced security needs. It is suited for large-sized, complex areas equipped with a TCP/IP Local Area Network infrastructure, with a high level of regular/visiting human traffic and requiring only the highest quality in security management. Examples of such areas include high-rise intelligent buildings, airports and government centers.

Matrix V takes advantage of the EL5000 Advanced Multi-door Controller, Elid's state-of-the-art, multi-purpose, TCP/IP network-ready controller. It is capable of numerous security management functions previously available only in separate component systems. Now, you can manage alarm monitoring, door access, car park access, visitor management and many other functions, all through a single EL5000 Controller. Each Controller comes equipped with a powerful, high-speed 32-bit Intel Processor and a large memory space for the storage of data for up to 100,000 user cards (with memory expansion board), plus Time Zones, Timers, PIN Code data, etc.

Matrix V system software extends the EL5000 Advanced Multi-door Controller's stand alone functionality with numerous value-added software modules, enabling you to manage your security system more easily and efficiently than ever before. Matrix V can manage up to 1,000 EL5000 Advanced Multi-door Controllers and 32 ISMS client workstations distributed over a single or multiple remote areas connected over a TCP/IP network. This translates to 8,000 doors, 8,000 remote field devices (144,000 input points (sensors) and 288,000 output points (alarms)), and an additional 8 input and 8 output points in the immediate proximity of each EL5000 Controller. It's wide capabilities make it suitable for even the largest, most complex building architectures and the most demanding security requirements.

MATRIX V FEATURES

Network and Internet Capability

Manage your entire security system over a TCP/IP network or even remotely over the Internet through a Telnet client or HTML web browser. Connect together and simultaneously control multiple EL5000 Controllers and their controlled field devices, card readers, alarms, etc. by simply plugging them into your TCP/IP network. Matrix V supports direct control over all readers, field devices and input/output points compatible with Elid's EL5000 Controller as well as system access from up to 32 client workstations connected locally or remotely through a TCP/IP network.

Made-to-Fit

Matrix V possesses a scalable system architecture, in terms of both hardware and software. A single controller can control a maximum of up to 8 door readers, 208 input and 344 output points (with the appropriate number of I/O Modules, Reader Interface Units and Electronic Field Devices as required for a particular system configuration). More controllers may be added as needed - up to 1000 controllers per Matrix V system. Only enough controllers and optional components needed for the coverage necessary for a particular security system have to be acquired. New components may be added as necessary to meet the expanding needs of a growing or changing organization.

In terms of software, numerous optional modules such as CCTV Support or Guard Tour functions may be added to the standard functionality of Matrix V as needed. Also, custom system interfaces may be introduced to Matrix V to meet the particular needs of certain third party systems such as fire control systems, office automation systems, etc. Matrix V is thus highly scalable, and can be made to fit to the individual security needs of any organization.

Matrix V software is fully compatible with all access reader systems, electronic field devices and input/output devices compatible with the EL5000. From infrared sensors and motion detectors to proximity card readers and biometric scanners, Matrix V possesses the functionality to meet any security need.

Powerful, Easy-to-Use Graphic User Interface

Matrix V is equipped with a 32-bit Windows-based GUI point-and-click interface. Perform powerful commands on your security system from your workstation with just a few clicks of your mouse. Your security system interface is displayed as an interactive image of your floor plan, with a menu of icons. This security interface animates whenever activity occurs on your security system, be it a door opening on the 2nd floor or a vehicle entering the building at the basement car park gantry. Events that would generate an alert such as a forced door or a fire will create more attention-grabbing effects such as loud colors, more dynamic animations, sound effects, pop up message boxes giving alert details, etc. Click directly on icons on the interactive security interface for more details of different areas of your security system as well as to give commands to the various devices in your security layout.

Instant, Accurate and Powerful Data Gathering and Reporting Features

Every Matrix V module contains powerful transaction logging and database look-up features that can collect, sort, compile and store thousands of transactions from all modules daily for analysis. For example, every card access attempt, and details including where, when and who's card was used, is automatically stored in the security system database. Stored data is maintained at a fully shared and integrated relational database system based on Microsoft® SQL Server, that is compatible with any ODBC-compliant SQL database engine. Reports can be generated on demand with a simple click of the mouse.

Multiple Modes Of Operation

· For identification, it supports PIN mode, Card mode and Card+PIN mode. In Card+PIN mode, the PIN can be auto-generated by an internal algorithm or chosen by the user. Up to 80 PIN codes can be recorded.
· If required, Card+PIN mode can be imposed on selected users only.
· A user attempting to access with a card will be locked out if wrong PINs are repeatedly entered.
· Support for Dual Card mode.
· If required, continuous card-swiping mode on a door reader is available for tracking purposes even when a door is open.

Access Time Zones

· 128 time zones are provided. Each time zone has an 8-day Schedule (7 weekdays + 1 holiday) with 2 start-stop periods per day.
· There are 20 records of Holidays.
· There are 256 sets of Global Timers made available.

Set Events

· It registers up to 50 types of events.
· Events can be saved selectively by user setting.

Anti Pass-Back On Multiple Access Points

· It supports 3 modes of anti pass-back :
  · hard anti-passback mode prevents double entry or double exit from a protected area.
  · soft mode enforces anti pass-back by Reader Mode on readers for entry purposes only.
  - alarm mode tolerates anti-passback violations but provides a special alert to system operators whenever an anti pass back violation takes place, with information on where the violation occurred and by whom. This is in addition to standard transaction logging.
· Global anti pass-back zones can be defined with multiple access points. Each zone can be defined with up to 8 Entry points and 8 Exit points.

Inter-locking Function

· Up to 8 doors can be interlocked. When this function is enabled, only one door can be opened at a time.

Alarm Monitoring

· EL5000 offers comprehensive Alarm Monitoring features. Conditional I/O operation can be defined to trigger controls on Alarm Inputs, Output Points and Readers. For high security applications, EFD can be used to provide supervised inputs.

Time Attendance Function

· Users have the option of incorporating Time Attendance functions to the EL5000, which gathers access behavior data at door readers to be used with the Matrix V Time Attendance software module.

EL5000 System Configuration

EL5000 Specifications and Functions

EL5000-multi door controller
El5000/L-lift controller
EL5000/T-time management controller

ER505 Reader Interface Unit

EFD80 Electronic Field Device

EA5168 I/O Module

EA16 Floor Selector Unit

- CPU : 32-bit 386EX running at 25Mhz
- Memory : 4 MB
- Power Input : 12 VDC, 3A
- Battery Charger : 17AH Lead-Acid with bulk or float mode charging
- Readers : Up to 8 Readers can be added
- Field Panels : up to 8 EFD80 can be added
- Communication : 10Mbps Ethernet (10baseT)
- Modem : Built-in RS232C serial port for modem support

ALL RIGHTS RESERVED. ELID SDN BHD @ 2001

ENTERPRISE-LEVEL SYSTEM > MATRIX V THE INTEGRATED SECURITY MANAGEMENT SYSTEM

EL5000 - Advanced Multi-Door Controller

The EL5000 creates a new dimension in Access Control Application hardware. It is a multi-purpose Controller offering a complete solution to meet security requirements for your premises. It can be configured to work as a Door Access Controller, a Lift Access Controller, a Time-Recording Terminal or a Car Park Controller. Furthermore, this all-in-one controller provides 8 access points. This means supporting a maximum of 8-IN and 8-OUT Readers at a time.

EL5000 Controller runs on a 32-bit Super-fast Intel 386EX CPU with high-speed processing power. It has a built-in 10Mbps 10-base-T Ethernet LAN Interface Adapter, which handles peer-to-peer communication between controllers and host a computer by using the TCP/IP Internet Protocol. The controller directly connects to an Ethernet bus without the need for a physical LAN Interface (for example, a Terminal Server).

Data transmission speed between a controller and a host computer is one hundred times faster than that of conventional RS232 or RS485 serial communication. Data from a host computer can be downloaded to the EL5000 in split seconds. This greatly reduces the time required in operating and maintaining your Access Control Systems, while eliminating performance degradation when your system expands many times in size.

The controller also maximizes methods of configuring an Integrated Security System. On its own, it can become a node of a LAN. This is made possible just by assigning it with an IP address and connecting it to a nearby UTP hub.

You may even use EL5000 Controllers for a WAN configuration. To further enhance efficiency, the Matrix V software is offered by ELID for centralized control and monitoring of an integrated security system consisting of up to 1,000 EL5000 Controllers.

[note] EL5000 Multi-Door Controller also functions as a Lift Controller (EL5000/L) and a Time Management Controller (EL5000/T)

Multiple Application
· Providing 8 sets access points, each set for IN and OUT readers.
· Each controller can be configured to work as a Door, Lift or Car Park Controller or a Time Recording Terminal.

Modular Expansion
· Up to four ER505 Reader Interface Units (RIU) for Door Readers. Each ER505 unit supports 2 set of access points for 4 door readers (2 pairs of IN/OUT Readers). An EL5000 Controller can handle a maximum of 4 units of ER505.
· Up to eight EA5168 I/O Module (IOM) for additional input (sensor) points and output (alarm) points.
· Up to eight External Field Device (EFD) units can be installed for extended alarm monitoring points. Each unit provides 16 supervised input points and 8 output points with free contact relays.

High Performance Networking
· RIU and EFD are connected to EL5000 Controllers via a proprietary communication bus called E-BUS. E-BUS works like a small LAN-network employing high-speed RS485 having 2 wires peered, with collision detection communication topology.
· Currently each EL5000 Controller handles a maximum of 4 RIUs and 8 EFDs, each on a single E-BUS.

LAN Enabled
· EL5000 is equipped with a 10Mbps10baseT Ethernet LAN Interface port.
· It supports peer-to-peer communication between controllers and a host computer by using the TCP/IP Internet Protocol.

Local Programming
· EL5000 Controller has full stand-alone capability and functions independently during system downtime or power failures through its on-board battery power supply.
· The user has the option to program the controller via a 16-key keypad, aided by a 20x20 LCD display.

Wide Choice Of Readers
· EL5000 works with a wide variety of card readers without any hardware modification. They include Proximity Readers, Smart Card Readers, Contactless Smart Card Readers, Wiegand Readers, Magnetic Readers, Bar-code Readers and Touch Memory Readers.
· Users can then select different data format in accordance to reader type. For example, with the Proximity Reader mode, 26-bit Wiegand format, ELID proprietary format or any other Proximity format already applied in the market can be handled by means of minimal operational settings.

Supports Different Operational Cards
· EL5000 manages 5 types of operational cards
· User Card to gain access to protected area
- Temporary Cards to temporarily replace accidentally lost or misplaced User Cards, etc.
· Visitor Card to gain access with specific expiry date, and limiting number of times of access
- Guard Tour Card used for guard patrol monitoring purposes in the Matrix V system
- Escord Card used in conjunction with normal user cards in Dual Card mode.
· Special Card to arming/activation of input/output points

Variable Length Alphanumeric Card Number
· It accepts numeric card-number with 10 characters of buffer length.
· It allows users to define their own card numbers when using Smart Cards or any other types of cards in the market supporting this feature.

Large Database
· EL5000 stores up to 33,000 cards and 23,000 transactions records at a time. The 23,000 transactions must be downloaded and cleared for further processing requirements, before new transactions can be recorded.

Total Integrated Solution

Matrix V incorporates numerous standard modules.

1. Real Time Intrusion Alarm Monitoring

Receive alert messages regarding security breaches on your security system, such as unauthorized intrusions or device tampering, as well as a map of the immediate vicinity of the alert highlighting the location(s) of the occurrences directly on your computer screen in real time as they occur. This helps your to response time and assists you in organizing and implementing a response such as contacting the police or deploying security personnel to the scene.

2. Door Access Management

Maintain total control and surveillance of all door access in your secure areas directly from any of the 32 connected client workstations. All door access activity is transmitted directly to your computer screen. You can also give specific commands to doors such as opening and closing them directly, sealing them off from further access, etc. Features include:

Anti-Passback Options - In order to prevent a single user card from being re-used to allow more than one person through a door access area, Anti-passback forces users who enter a secure area with a card to leave the area before the card may be used to enter that secure area again.

Inhibit Access and Permanent Lock Release – Permanently lock and unlock particular doors instantly on demand in response to specific events such as an escaping thief or a fire that demands immediate evacuation or to facilitate the movement of furniture through a particular route.

Special door configurations such as dual card mode, where in order to access a door, a higher level "escort" card is required, and Inter-Lock configurations, where one has to enter and close one door before another door ahead will be unlocked.

3. Addition optional features which can be incorporated into Matrix V's standard functionality:

- CCTV Support

CCTV Remote Security Cameras may be logically linked to particular security devices, such as card readers. Should an alarm originate from that security device, footage from the linked camera can be fed directly to your computer screen through the Matrix V software to aid security personnel in assessing the situation. Also, event-triggered recording allows a video recorder to automatically record footage from CCTV cameras whenever a system event occurs

- Car Park Access Control

Control access to a car park through the use of User ID Cards at the car park gantry areas.

Matrix V User and Visitor Cards can be used to gain access to car park gantries. Anti-passback applies to vehicles as well - once a card has been used for entry it can only be used to exit. This is to prevent multiple vehicles from using the same card to enter the car park area.

Monitor vehicle traffic and directly control the gantry from the client workstation.

- Log vehicle traffic according to Card ID, dates, entry and exit times, etc.
- Give commands such as opening and closing the gantry for special occasions, such as to facilitate the entry of a convoy of delivery vehicles quickly.

♦ Time Management System

Users coming and going from work have their access times logged at the card reader entrances and exits of their work areas. This enables human resource personnel to notice personnel access behavior such as promptness, tardiness, early out, overtime, absenteeism, lengthy breaks, incomplete entries (ie. an out-entry but no in-entry, an in-entry but no out-entry), abnormal permissible movement (ie. a person from Accounting and Finance in the R&D department, etc.).

♦ Cardholder Messaging System

Allows brief messages to be left for particular cardholders as they access card reader points. The message is displayed on the accessed card reader's LED/LCD display upon the recipient(s) swiping his/her card on the card reader. This system is similar to the Short Message Service (SMS) used with mobile phones and can be very useful alternative method for the proliferation of urgent short messages to one or a number of personnel within a large building quickly.

♦ Photo ID Badging System

Design and create your own unique card layout. Cards may also be optionally created with a photo of it's assigned cardholder printed onto the card. This photo can be acquired quickly and easily using a digital video camera linked to the Photo ID Badging System.

Photo ID cards add an extra layer of security to your security system. Photo ID images taken during card creation are also stored in the security system's user database. This aids security personnel in verifying the identity of cardholders on sight. This function is also useful with CCTV support as door entries may be verified through a comparison between a card user's image on the CCTV and an archived digital photo of that card's authorized user.

♦ Visitor Management System

Manage a large volume of visitor traffic through your premises quickly, easily and accurately.

- Create and assign visitor cards instantly on demand.
- Keep track of visitor locations, areas visited, visitor population in a secure area, etc
- Restrict Access to sensitive areas based on security areas, floors or even particular doors.
- Temporary cards expire automatically within a specified time so they cannot be reused later.
- Old temporary cards can be easily recycled and reassigned.
- Analysis of visitor movement can identify popular routes and visitor destinations.
- Track Visitor Vehicles in the Car Park (in conjunction with car park access control).

♦ Guard Tour System

Guard Touring is an additional security feature involving the close monitoring of guard patrol movement through their assigned routes in security areas. During a Guard Tour, patrolling guards swipe their Guard Tour cards specific card readers along their tour, which registers on the security interface. Each Guard Tour has a strict schedule, with a list of periods during which the patrolling guard must swipe his or her Guard Tour card at a particular Tour card reader. If a guard is late swiping his or her card, or misses swiping a card reader along the tour, it is automatically assumed that the guard may have run into some kind of trouble and an alert will be activated, alerting other security personnel.

♦ Lift Access Control

Lift access may be restricted according to the access rights of a particular lift access cardholder to access particular floors. Unauthorized floor entry is restricted at the lift car level, as restricted floors buttons will be rendered inoperative. In addition, floor call overriding can be enabled to give lift usage priority to very important persons (VIP) such as Executive Officers, visiting dignitaries, etc.

Interfacing with Third Party Systems

Matrix V can be customized for interfacing with virtually any 3rd party system. As a standard data-sharing feature, Matrix V is able to transmit logs of all activity on the security system to third party software via a TCP/IP network or through the manual transferring of data and/or transaction log files.

Also, third party systems such as building automation systems and fire supervisory systems, etc. may be hard wired into input/output points on the EL5000 Controller and controlled through relays that trigger these systems on the occurrence of certain detected events. Matrix V can also communicate directly and interface with third party systems through the TCP/IP network by sharing a common protocol.

Stable and Reliable Software Platform with Data Sharing

Matrix V is built to take advantage of a powerful and reliable platform - Microsoft® Windows 2000 Server and Microsoft® SQL Server. This operating system is perhaps the most widely used operating system in the world and offers a high level of compatibility with various third party software and hardware as well as alternate operating systems. This platform facilitates easy data sharing between third party applications that use this operating system as a common platform, eliminating redundant data entry, inconsistent data on different databases, incompatible report formats, etc. For example, a Business Automation System that uses an SQL database managed by Microsoft® SQL Server may easily share data with Matrix V software, integrating card user information with employee information, etc.

Design and customize your Security System to your own preferences

Create your own custom interactive floor-plan layout. Import images of your floor plans then add animated security device icons according to their physical locations onto the layout. These icons can be used to give commands to those particular devices as well as alert security administrators to real-time activity in the system (such as a door opening), by highlighting themselves with animations and sounds on your computer screen.

Define special behavior on your own security system in response to certain events through the use of Event Driven Output. This feature allows you to program a set of responses on the output points of your security system upon the occurrence of a particular transaction type detected by a reader. For example, upon the detection of the first valid entry into a room, the room lights, air-conditioning and power to room devices can be automatically activated.

You can also customize your own Reaction Tables, a special logic programming control that automatically performs a set of actions when certain conditions occur. Reaction Tables are very flexible and robust and can be programmed for any purpose one can think of. Any device attached to the system such as security doors or alarms and third party equipment connected to the Matrix V system, such as fire detectors, lights, air-conditioning, etc. can be used in Reaction Tables. (See *Dealing with Emergencies* below.)

See, Hear and Control from One location or Many

Monitor and manage your entire security system from any network workstation of your choice. Permissions can be set so that only particular functions work on some workstations and only by particular users. All security system activity is immediately reflected on your computer screen through animated icons, sounds and messages. Receive and respond to alarms promptly through highlighted pop-up dialog boxes. You may also enable, disable and otherwise give commands to any security device on your network with just a few clicks of the mouse. All activity in your security system is logged, both normal (eg. normal access to the IT department) and abnormal

(eg. Invalid entry, Device Failure, etc.). System activity and statistical reports can be automatically generated on demand.

Keep Track of the Population

Instantly receive a breakdown of the number of people inhabiting an area of the security system. Know details such as:

- How many people inhabit that area.
- Identify each person there.
- Log how long each has been there.

This information is also logged in the transaction database and can be retrieved for analysis at a later time.

Dealing with Emergencies

Customize your security system to respond to emergencies according to your exact specifications. Any relay controlled output device such as sirens, doors, lights, communication lines, etc. may be programmed to activate in response to direct user commands or an automatically detected emergency.

For example, should your security system sensors detect an emergency, it can automatically:

- Set off audible alarms and alarm signals and inform all personnel.
- Page or dial-up relevant authorities such as the fire brigade or police.
- Disarm security doors.
- Organize an evacuation of the premises by calculating the number of persons logged into the building and providing instructions to those persons to evacuate the building via "mustering stations", where evacuees may log their successful escape in the system. The system can be programmed to be intelligent enough to suggest evacuation routes that avoid "danger" areas that have triggered sensors within them as well as tally personnel who have mustered and who might be left behind in the premises.

Sophisticated Card Management System

Matrix V also comes with a sophisticated card management system, which enables you to set up basic User Cards with User Details, Anti-Passback options, Card Expiry and Access Time Zones. All card access is logged, and cardholders can be traced down and located according to the last zone they accessed with their cards. Matrix V supports storage for an unlimited number of card details on-server, while each EL5000 Controller can store up to 33,000 User Cards (upgrade-able to 100,000 cards).

Matrix V also supports special card functions:

Escort Cards	Certain highly sensitive areas may be equipped with an extra layer of protection through the use of dual-card doors. Such doors can only be accessed by a holder of a normal user card and another special Escort card, which, for example, may be held by a security officer posted at the door entry point or a trusted executive officer.
Temporary Cards	These cards are meant for normal staff members who have somehow lost their normal user cards. These temporary cards are tagged with the staff member's identity number in the security system so that his or her movements may still be monitored within secure areas. They have a short expiry date, usually a day.

ELID TECHNOLOGY
INTERNATIONAL PTE LTD

TENDER

SPECIFICATION

ELID TECHNOLOGY
INTERNATIONAL PTE LTD

TECHNICAL DATA

Tender Specification for
Enterprise Wide Integrated Security Management System

OUTLINE

1.1 This document specifies the technical criteria applicable to the acquisition of a complete computer-based Integrated Security Management System (ISMS). The system supplier, hereafter referred as the Tenderer shall furnish a standard, field proven, integrated hardware/software system, which shall functionally provide the performance, reliability, and expansion capability specified herein.

1.2 This system shall be practicable for sufficiently well equipped premises, pre-configured with distributed communication cabling system. It shall be suitable for premises, which require the monitoring, and tracking of large number of occupants, having significantly high frequency of access activities, where one or more of the following issues are of concern:

- The premises are significantly large
- Requires efficient management of safety systems and security control
- Requires system integration and frequent communication and data exchange with other remote premises
- Requires access and control of system functions from remote locations
- There are a large number of permanent, non-regular and/or visiting occupants
- Attendance taking
- Lodging and payment
- Require frequent tracking for contact purposes
- Require conservation of energy consumption
- There are frequent lending of mobile assets

1.3 This tender specification shall constitute five sections:

- The suitable infrastructure ISMS can apply.
- The designed features for access controls in the software system.
- The hardware system that provides for both access and security controls.
- An evaluation of the processing and communication methods applied between domain devices and computer workstations as well as interfaces with data communication infrastructure between multiple domains.
- An overall view of the system for security controls.

INSTRUCTION TO TENDERERS

1.1 All materials in this specification are mandatory, but their applications shall be flexible, and only some may be utilized for specific purposes, depending upon the distinct requirements of the system.

1.2 If it should occur that the Tenderer-released proposal does not satisfactorily imply or indicate the meeting of all requirements stated in this specification then the entire proposal should be deemed non-responsive.

1.3 The Tenderer may indicate non-compliance to any requirement, may offer a functional alternative to specific requirements, or may clarify requirement compliance criteria as necessary.

1.4 The Tenderer shall supply or provide for the commissioning of the project. Material supplied shall also include this tender specification and proposed plans for licensing, site configuration, devices, pricing, labor, time of delivery, period of commissioning, period for testing and adjustment, customization of specific functions suited to the client and maintenance period for operation.

Section 1.0: Systems Infrastructure

1.1 The Integrated Security Management System (ISMS) shall seamlessly integrate with a standard Ethernet TCP/IP protocol Local Area Network (LAN), having the aim to integrate with other geographically remote LAN system equipped with ISMS.

1.2 The ISMS shall allow operation via two primary methods of data communication infrastructure; these methods may be employed in conglomeration of the following or homogeneously for communication between computer access devices:

1.2.1 Direct access to Controllers and their corresponding Reader, Sensor and Output devices via TCP/IP local area network connection and standard device-to-device cabling using standard local area network topology such as Ethernet.

1.2.2 Remote access through various data communication mediums such as telephone lines, microwave transmission, optic-fibre cabling, or satellite transmission, using wide area network protocols such as the Internet.

1.3 Within a LAN system, access management module of the ISMS shall manage access with a minimum of four readers or a maximum of 8,000 readers for door / lift / car park through TCP/IP connections using the Advance Networked Controllers. The ISMS Server system should be powerful and robust enough to accommodate ISMS client workstation capabilities on every workstation connected to the network without compromising system performance.

1.4 The general requirements in facilitating the Integrated Security Management System shall include the following:

1.4.1 Power cabling system.

1.4.2 LAN Hub/Switch with sufficient plug-in points for all required network devices such as servers and client workstations.

1.4.3 LAN and controller-to-device cabling system of sufficient length and coverage depending on the required configuration of the proposed ISMS.

1.4.4 Server and workstation machines with sufficient memory capacity, processing capability, networking equipment and preferably backup facilities.

1.4.5 For wide area networking, access to remote data communication infrastructure resources such as dedicated telecommunication lines, underground optic-fibre cabling, satellite and/or microwave transmission as well as special equipment required to use those resources such as modems, cable boxes, telecommunication dishes, etc.

1.4.6 Technical support, troubleshooting facilities, equipment, computer software as to be advised by the Tenderer or the original supplier of the system.

1.5 Definitions of primary components in the infrastructure of ISMS:

1.5.1	PC	Personal computer that operates with ISMS software, either operating as a server station or a client workstation.
1.5.2	LAN/WAN	A networking system that allows interactive communication among computers and ISMS devices via network cabling system and device identification using unique IP-addresses. LAN stands for Local Area Network, where all communicating stations are within a single geographical location within 1 km from each other. WAN stands for Wide Area Network, where communicating stations may be geographically distributed beyond 1 km from each other.
1.5.3	Advance Networked Controller (ANC)	An intelligent controller that fetches data from active access-devices, sensor and output relay devices, converts raw data into packets according to specific TCP/IP protocols before sending them out to PC via LAN. It provides independent instructional controls to all connecting Reader Interface Unit (RIU) for access-devices.
1.5.4	Reader Interface Unit	A slave controller. It interfaces with multiple access-readers (that use card, keypad and biometric related technology) located at entrance or exit points for authorizing accesses that may be applied to attendance taking, door, car park or lift.
1.5.5	External Field Device	A remote device or panel that allows motion detector, sensors, magnetic contact, or building appliances to be connected to the system.
1.5.6	Accessories	Devices that relate to alarm system and physical security controls that fall in the categories of alert making, smoke or fire arrester, or magnetic gadgets that bar opening or closing of doors, as well as power supply.
1.5.7	RS485	Serial communication cabling between ANC and access readers, and cabling among ANC and EFD units.

Section 2.0: Access Control Features In The Software System

2.1 *Advance Networked Controller configuration*

2.1.1 The standard ISMS system shall be able to support up to one thousand units of Advance Networked Controller (ANC), or four thousand pairs of entry/exit ('IN'/'OUT') accesses (made possible using Reader Interface Units). This shall include the capability of supporting up to eight thousand remote field devices.

2.1.2 ISMS shall allow computer workstations access to any ANC units, with at least one ISMS server station to hold a central database.

2.1.3 The logical configuration of ISMS shall include the allocation of IP addresses of ANC as well as PC stations within the scope of the system. At least a server station shall be obligated to upload or fetch data from the ANC units via the TCP/IP data communication infrastructure used in the network.

2.1.4 Physical infrastructure of Advance Networked Controller (ANC):

2.1.4.1 In a standard configuration, an ANC unit shall communicate with an ISMS server station via a TCP/IP network connection.

2.1.4.2 There shall be an alternative to the above infrastructure due to the need for access data recording and sharing, and the controlling of functions from a single or multiple geographically remote locations. In this case, the system shall hold the capability to interface and integrate with other remote networks compatible with the ISMS data communication and control protocols, using existing network and intra-network data communication-infrastructure.

2.2 *Control over System Operator Access Permissions and Data Hiding*

2.2.1 It shall be possible for an appointed system administrator of the ISMS to determine the function categories, detail menus and information databases that may be accessed by individual Operators or Users, irrespective of their workstation locations.

2.2.2 The mentioned function categories shall include functions specified in System Operator, Designer (a system module for device configuration and interface designing) and Security Manager (a system module for monitoring connected reader and I/O devices) in the ensuing clauses.

2.2.3 Registration of System Operators and system accessible function categories shall include operations such as selection by mouse click, adding, deleting and editing of record in a windowing dialogue environment and so on. Such registration shall only be undertaken via single authorization by means of system administrator's password.

2.2.4 All Operators shall be required to log into the ISMS with a password, irrespective of the location of their workstations. There shall be only one account logged on at any one time per Operator. Also, Operators shall have access to only the designated function categories that relate to their work scope, as predetermined by the system administrator and/or authorized personnel.

2.3 *Designing for Areas and Devices Configuration*

2.3.1 System configuring module shall include logical set up of access controllers, input sensor and output relay points.

2.3.2 It shall be possible for the system to configure a conglomerate or homogenous of devices such as door, time clock, car park and lift access controllers, sensors and alarm.

2.3.3 Graphical User Interface (GUI) and device presentation

2.3.3.1 There shall be a provision of GUI for visual representation of map, location of devices and type of devices.

2.3.3.2 The system shall impose no restrictions upon the type of architectural floor maps (graphical meta files) that may be imported for use as part of the Graphical User Interface. The minimum number of importable floor maps of the entire ISMS shall be one thousand. Each floor map shall be able to associate or link to a minimum of sixteen devices. This is irrespective of the type of devices being put together).

2.3.3.3 Logical allocation of devices shall be represented by 2-dimensional pixel coordinates.

- Allocation of devices (or objects) shall include moving of object on a screen by mouse-drag mechanics and 'point, click, select and add'.
- Likewise, detail property (or information) of each object shall be easily accessible by mouse point and click.

2.3.3.4 It shall be possible for clusters of devices to be associated with described area or named location such that access activities of selective areas can be monitored and traceable by using access-user identity.

2.3.3.5 It shall be possible to enable and disable devices by end-users without the need to re-program or re-configure them.

2.3.4 Anti pass-back

2.3.4.1 Anti pass-back function shall be available for door and car park access.

2.3.4.2 Configuration shall include anti pass-back functions for both local and global controls.

2.3.4.3 Local controls shall be defined for entry-exit controls at individual access-points where access can not be carried out more than once consecutively for either entry or exit.

2.3.4.4 Global controls shall be defined for entry-exit, entry-entry or exit-exit controls that involve several access-points of an area or a zone managed by the same Advance Networked Controller.

2.3.5 This module shall provide functional facility for the configuration of event driven reactions such as specification of events and setting of responses (for doors, sensors and alarm triggering, electrical equipment with automation switches).

2.3.6 It shall be possible to define at least 256 sets of conditional reactions irrespective of the number of defined controller units. For each set, the following structure shall be employed (using arguments: IF, WAIT, THEN, ACTION, WHEN, FOR, ACTIVATE):

WHEN

(Time Zone #1) OR (Time Zone #2)

WHERE

A combination of defined Reader locations

IF

A combination of Reader and I/O point events that trigger an alarm.

Or combination of Reader event and associated Card number

THEN

Two possible ACTIONS from the following three categories shall be executable at a time:

Door Access Control : a selection of one of the following actions
(PLR ON/OFF, PIN Mode ON/OFF, Inhibit Access ON/OFF, Anti-passback OFF/RDR/TMR, Pulse Door Open, Permanent Door Release ON/OFF)

Input Device: a selection of one of the following actions
(ARM / DISARM SENSOR, ACKNOWLEDGE ALARM)

Output Device: a selection of one of the following actions
(ON / OFF / INCREMENT / DECREMENT)

ELSE

Two possible ACTIONS from the following three categories shall be executable at a time:

Door Access Control: a selection of one of the following actions
(PLR ON/OFF, PIN Mode ON/OFF, Inhibit Access ON/OFF, Anti-passback OFF/RDR/TMR, Pulse Door Open, Permanent Door Release ON/OFF)

Input Device: a selection of one of the following actions
(ARM / DISARM SENSOR, ACKNOWLEDGE ALARM)

Output Device: a selection of one of the following actions
(ON / OFF / INCREMENT / DECREMENT)

2.3.7 Device grouping that eases categorical controls shall cater for input, output and access controlling devices.

2.3.8 Recording of alarm events

2.3.8.1 There shall be provision of functions for (1) pre-setting a long list of alarm response instructions for tour guards or operators to carry out appropriate actions; (2) pre-programming response actions; and (3) pre-recording feedbacks that are required by the rules and regulations specific to security systems of particular premises. Should significant events occur, the actual combination of actions taken and feedbacks can then be selected and be recorded in minimizing impromptu data entry by the guards / operators.

2.3.9 Handling of input and output points

2.3.9.1 All sensor and alarm points shall be calculable and appointed by logical unit numbers, which are directly associated with their physical connecting points on the electronic field device controller.

2.3.10 Download data to Advance Networked Controller.

2.3.10.1 The ISMS shall include the consideration of controller firmware updates. It shall be possible for all pre-set primary parameters stored in the central database to be re-downloaded (by detail, category or complete set) into the Advance Networked Controller.

2.3.10.2 It shall also be possible to erase the database memory of the Advance Networked Controller.

2.4 *Door Access Control and Monitoring*

2.4.1 Access information shall be presented on real-time mode:

2.4.1.1 It shall be possible for the system to automatically switch floor maps displaying on the computer screen. It shall be able to display the status of devices associating with power / sensor / switch 'ON' or 'OFF'. Occurrence of alarms shall also be visually and audibly expressed, which include invalid access, security breach such as forced access, power tempering and device communication failure.

2.4.1.2 Every kind of transactions shall be displayable in a listing format as an alternative to the above stated presentation. It shall include visual / audible indicator for access nature or security condition, with device name and timing of occurrence. Details and properties of a transaction related device shall be accessible by mouse click on the displaying transaction record.

2.4.1.3 An Operator shall be able to make comparisons between a valid digital photograph of the authorized access-user with an image of a user currently accessing the system captured through a remote video camera. The system shall provide the photograph display and a captured image of the accessing user on a PC located in a monitoring room, upon every occurrence of an access attempt using that user's access card. The photograph shall be retrieved from a database on receipt of card access code transmitted from the card access-point.

2.4.2 Access timing controls

2.4.2.1 The system shall provide the setting of access Timers where 2 sets of periods fall within 24 hours. There shall be an allocation of 20 Timers, being standardized throughout all access devices except time clock.

2.4.2.2 There shall be a provision of 10 groups of Time Zones, where each zone applies to holidays and a week of daily timers.

2.4.2.3 Another level of access control shall be applied for selective access entrance-exit points for their association with Time Zones. There shall be support for up to 99 access control groups in total. These groups shall be inclusive for controls of full day, partial day and no access. Each access control group shall then be able to be appointed to individual users / cardholders.

2.4.2.4 Timer and Time Zone shall be applied to the following commands:

- Access
- Automatic lock release
- Disarming of alarm
- Anti pass-back
- PIN usage

2.4.3 Holidays

2.4.3.1 It shall be possible to pre-program 20 set of holidays. The valid access times of holidays shall be programmable to be different from other days.

2.4.4 Automatic Lock Release

2.4.4.1 It shall be possible to program one or two periods for each day of a week, in such a way as to enable the locking system to be automatically released only at specific times.

2.4.5 Automatic PIN Disable Time Zone

2.4.5.1 It shall be possible to program two periods for each day in a week and on holidays, for disabling PIN usage.

2.4.5.2 System shall allow one command to have precedence over another in timing controls. It shall be in the following arrangement:

Command	To be affected by the following command
Access by card	Inhibit access command; Access by card shall become insignificant when automatic lock release or permanent lock release being issued.
Automatic lock release	Permanent lock release command
Permanent lock release	Automatic lock release (ALR) command: Lock release of door shall no longer be in effect if clock moves into relock time zone according ALR time zone cycle. This shall be in such operation with the assumption that permanent lock release is not applicable an indefinite sense.
Anti pass-back	Anti pass-back shall no longer be significant whenever clock moves into automatic lock release time zone or permanent lock release being issued explicitly. However, anti pass-back shall be reactivated if clocking time zone falls back into relock range.
Access by PIN Code without card usage	Inhibit access command.
Disabling of PIN usage while accessing by card	Inhibit access command
Inhibit Access	It shall not carry any time controls. It shall be a direct order by user that overwrites other commands. This shall be in such operation with the assumption that access inhibition is usually controlled explicitly by authorized operator.
Disarming of external alarm device	None

2.4.6 Cardholder

2.4.6.1 The software shall not impose quantity limits for cardholders registration. However, the quantity shall be finite in accordance to the limits at each Advance Networked Controller.

2.4.6.2 Cardholder name shall be programmable for each cardholder either directly at the Advance Networked Controller or via PC. Each cardholder name shall be 12 characters long.

2.4.6.3 Each defined cardholder shall be manageable by categories of 'temporary', 'visitor' and 'permanent'. 'Temporary' shall be applied for temporary use while actual 'permanent' or 'visitor' card is missing. Once found, the temporary-card shall be able to be disassociated with actual card for storage. 'Visitor' card shall be subjected to uses with frequent change of holder that require efficient issuance and return system, while 'permanent' card shall be applied for long term, regular access-users.

2.4.6.4 The software shall enable the storage of greater amount of information about each cardholder or access-user than what each Advance Networked Controller is capable of storing. Additional 4 user-definable fields shall be provided by the software.

2.4.6.5 ISMS shall apply 6-digit card storage and reading.

2.4.7 Usage of personal identification number (PIN)

2.4.7.1 The system shall provide 3 categories of PIN code:

- 4-digit code — as predefined by manufacturer in association with individual card.
- 4-digit code — that can be programmed by user or operator in association with individual card.
- PIN of any length up to 6 digits — can be programmed by user or operator, which allow access without the use of card, and to be controlled by time zone. This usage shall be introduced as 'PIN code entry'. It shall be an additional option alongside either of the above PIN usage (manufactured or user programmed). Each access-point shall be provided with 10 sets of PIN entry codes for individual uses; each set shall be associated with particular time zone.

2.4.7.2 It shall be possible to enable or disable the use of a PIN (for the first two categories) by executing a command from the PC or at the Advance Networked Controller. When being enabled, access-users shall need to key in 4-digit number after swiping or badging card. The enabling of PIN usage shall be controlled at individual access-points or Advance Networked Controller. It shall not be possible to liberate such usage at the level of individual access-user.

2.4.8 It shall be possible that individual cardholder access be solely controlled by access-points rather than by timing.

2.4.9 Anti pass-back

2.4.9.1 Execution of this command shall include the following alternatives:

- Local control (at single door) — access shall not be allowed more than once consecutively for entry, or likewise for exit, through the same door.
- Multiple doors — access shall not be allowed more than once consecutively for entry, or likewise for exit, of a given area controlled by up to 8 IN-Readers and 8 OUT-Readers.
- There shall be a provision for the application of delay period (measured in minutes) before anti pass-back enforcement.
- It shall be possible to release enforced anti pass-back at certain hour (hours and minutes) of each day or direct release by Operator.

2.4.10 Sensor Input and Alarm

2.4.10.1 To ease monitoring, it shall be possible to configure sensor input as Alarm or Status type, in order to enable appropriate displaying of icon representation.

2.4.10.2 It shall be possible to display the appropriate condition of each configured sensor device. This shall include 'Normally closed/opened' or 'Tampered' presentation for Alarm sensor type, and 'ON' or 'OFF' condition for Status type.

2.4.10.3 The Alarm type shall enable an Operator to carry out confirmation on acknowledging, disarming and re-arming the alarm.

2.4.11 Alarm acknowledgement and history listing of alarm events

2.4.11.1 It shall be possible to acknowledge alarm using mouse click on the representing icon, select pre-registered instructions, taken actions and feedbacks, and make a record the alarm event. Reactivating alarms shall be as easy as a mouse click.

2.4.11.2 All historical alarm events shall be viewable and printable for monitoring and management. Such events shall be recorded with detailed information that includes date/time, device and location.

2.4.12 Reporting

2.4.12.1 It shall be possible to generate relevant reports by specification of date range, controller range, access-users' detail categorical information and the following types of transactions:

- All transactions, with or without name for each holder.
- Alarm transactions only.
- Transaction of a specific holder.

2.4.12.2 It shall be possible to allow operator to select only relevant parameters for reporting.

2.4.12.3 It shall be possible to choose the types or to include all types of events to be logged in the transaction buffer. The types of events shall include the following:

- Valid or Invalid entry with card number
- Invalid access time zone with card number
- Duress alarm
- Wrong PIN entered
- Door forced open
- Push button entry
- Anti-passback fault
- Sensor Alarm
- Sensor #1, #2 armed
- Sensor #1, #2 disarmed
- Sensor #1, #2 activated
- Control Output #1, #2, #3, #4, #5, #6 activated
- Control Output #1, #2, #3, #4, #5, #6 deactivated

2.5 *Lift Access Control and Monitoring*

2.5.1 The LIFT access control system shall enable the setting of access restriction to only authorized personnel, of which accessibility shall be configurable to specific floor(s) of a building.

2.5.2 Access controls

2.5.2.1 The Lift Access Controller shall have 10 Access Time Zones, which are programmable with 2 periods per day. Each Time Zone shall comprise of time accesses for 7 days week and an access for defined holidays. So, there shall be 8 definable accesses per Time Zone.

2.5.2.2 There shall be a provision of up to 64 Floor Zones of records. Each zone shall be programmable with 4 selections of floors or range of floors.

2.5.2.3 The controller shall provide automatic 'All Floors By-pass' function by using Time Zone.

2.5.2.4 An `Inhibit Access' command shall be provided by the controller to bar usage of lifts during lift maintenance or in the event of a lift breakdown.

2.5.2.5 The controller shall be able to trigger keypad locking when tampering is detected.

2.5.3 Holidays

- It shall be possible to program 20 holidays. A holiday's valid access times may be programmed to be different from other days.

2.5.4 Usage of personal identification number (PIN)

2.5.4.1 The system shall provide 3 categories of PIN code:

- 4-digit code — as predefined by manufacturer in association with individual card.
- 4-digit code — that can be programmed by user or operator in association with individual card.
- PIN of any length up to 6 digits — that can be programmed by user or operator, which allow access without the use of card, and to be controlled by time zone. This usage shall be introduced as 'PIN code entry'. It shall be an additional option alongside either of the above PIN usage (manufactured or user programmed). Each access-point shall be provided with 10 sets of PIN entry codes for individual uses; each set shall be associated with particular time zone.

2.5.5 Reporting

2.5.5.1 It shall be possible to generate relevant reports by specification of date range, controller unit range, access-users' detail categorical information and the following types of transactions:

- All transactions, with or without name for each holder.
- Alarm transactions only.
- Transaction of a specific holder.

2.5.5.2 It shall be possible to allow operator to select only relevant parameters for reporting.

2.5.5.3 It shall be possible to choose the types or to include all types of events to be logged in the transaction buffer. The types of events shall include the following:

- Valid or Invalid entry with card number
- Invalid access time zone with card number
- Duress alarm
- Wrong PIN entered
- Sensor Alarm
- Sensor #1, #2 armed
- Sensor #1, #2 disarmed
- Sensor #1, #2 activated
- Control Output #1, #2, #3, #4, #5, #6 activated
- Control Output #1, #2, #3, #4, #5, #6 deactivated

2.6 *Car park Access Control and Monitoring*

2.6.1 The monitoring module shall provide at least a minimal capability of tracking the number of parking vehicles per defined area or zone of the premises.

2.6.2 The software shall enable the definition of car park areas or zones by name.

2.6.3 Each defined area shall be applied to execute anti pass-back enforcement mode, and the setting and tracking of the number of parking vehicles.

2.6.4 It shall be possible for an authorized Operator to execute release anti pass-back command to each defined area.

2.6.5 A PC workstation shall be able to receive and display the tracked number of parking vehicles per area in a real-time mode, from its connecting front-end processing that link with car parking IACs. It shall be possible for the Operator to execute 'car park lot full' indicator as needs arise, although the indicator may be executed automatically.

2.6.6 It shall be possible to execute reset of vehicle counter to 'null' from the PC workstation, if the needs arise.

2.7 *Reporting of Transaction Data*

2.7.1 Reporting shall include the provision of data record selection using the following keys:

- Employment category (number, department, position);
- Access-point;
- Date / Time;
- Card numbering;
- The printer that connected to ISMS shall be able to print on-line transactions as they occur.

2.7.2 The system shall allow the generation of management reports based on past historical data saved on computer storage facilities.

2.7.3 Every transaction, whether valid access attempt, operator command or alarm event, shall be recorded in the transaction file complete with date, time (to the nearest minute), transaction code, originating device, and operator ID (when applicable).

2.7.4 Each operator action event shall be logged to an audit trail with date/time stamp and operator User ID.

2.7.5 The central control PC shall provide the following historical reports:

- Access Control Reports;
- Alarm Monitoring Reports;
- Operator Activity Reports;
- Card Holder Details Reports;
- System Configuration Reports.

2.7.6 The report generation process shall allow end-user to specify conditions to filter out for required data range.

2.7.7 It shall be able to produce list of cardholders by area based on their last access to the readers.

2.7.8 The central control PC shall generate reports without preventing the Operator to process alarms or make any changes in the database.

2.7.9 All the reports shall be able to be previewed in a Preview Screen before printing.

2.7.10 The Tenderer shall provide an alternative module for user the facility of selecting only required parameters for reporting.

2.8 *Backing up and Recovering Database*

2.8.1 Such facility shall include both the system settings and transaction data.

2.8.2 Should it occur that premises must follow the rules and regulation of contingency planning, the Tenderer shall fulfill such statement at its discretion. The Tenderer shall advice for the provision of equipment that would facilitate, for example, a backup power supply, undertaking regular data duplication and overtaking of operation in order to ensure minimal interruption in the aid of fulfilling such requirement.

2.9 *Importing and Exporting of Database*

2.9.1 ISMS shall provide the minimal facilitation of importing data on cardholder detail information, and exporting of transaction data into plain text files. The Tenderer shall advice the system user or shall cooperate with the third party system user for required or needed protocol.

2.10 *Other modules which are supplementary*

2.10.1 Each supplementary module shall be priced and be made purchasable individually.

2.10.2 Time Management System (TMS)

2.10.2.1 As a system module, the TMS software shall automate employees' time attendance data collection, computation, editing, post-processing, screen display or printing and exporting data into a data file for third party software.

2.10.2.2 This module shall share database facilities with Advance Networked Controllers, thereby allowing the tracking of attendance without the need to use time clocking system.

2.10.2.3 Holidays, shifts and leaves shall be pre-programmable.

2.10.2.4 Graphical User Interface and attendance report generation

- Recorded employees shall be presentable by an organizational chart or by individual department.
- An Operator shall be free to generate attendance reports organized according to individuals, by department or by the entire organization. It shall be possible for attendance to be generated on a daily, weekly or monthly basis, base on a calendar where day/month/year can be selected.
- The system shall indicate clearly the progress of attendance generation using a progress bar and percentage value.
- Attendance reports can be generated anytime.

2.10.2.5 Under door access mode, the system shall permit real-time transactions.

2.10.2.6 Clock data update and auto integration with time clock

- It shall operate either for door or time clock data. The ISMS server and DB Manager shall fetch data into specific database, thereby allowing TMS to process data either from door access or from time clock, an option to be specified by user.
- Computation of attendance and IN/OUT activity shall be based on session code or estimated range of time, thereby does not impose limits upon the number of IN/OUT transactions per day per employee or system users.
- An operator shall be allowed to amend daily transaction records.
- An organization chart shall be employed to display employee records systematically, of which its tree chart can be imploded or exploded.

2.10.2.7 The system shall provide command for the recording of standard working period. Attendance shall be generated according this working period for employees not associated with any shift group.

2.10.2.8 The system shall generate attendance base on predefined work 'IN', work 'OUT', breaks and start of overtime.

2.10.2.9 Attendance report shall be printable in accordance to previous clause with summary values for absence, lateness, overtime, base on requested time frame of daily, monthly or annually.

2.10.2.10 The system shall provide back up and restore commands for definitions made and generated attendance.

2.10.2.11 Shift and leave controls

- The system shall provide a visual presentation of monthly time sheet to allow an Operator or system administrator to manage daily employee shift and leave. The defined and recorded actual taken shift and leave shall be calculable and be reflected on generated attendance.
- A facility of shift group definition shall be provided in order to aggregate groups of employees working on specific shifts.
- Defined leaves shall be selectable and be able to be added on time sheet by mouse click.
- System shall automatically generate a time sheet base on selected month to be filled up with shifts for individual employees that have been associated with shift group. An Operator shall still be liberated to change the working hours or shift, on any selected day.
- Predefined holidays shall be automatically presented on the time sheet.

2.10.2.12 Export of attendance data

- Generated attendance data shall be exportable to a text format in order to be utilized by the third party software.

2.10.3 Mailing Short Message to Access-points (Messaging) Module

2.10.3.1 The Messaging System shall be designated to door access-points only.

2.10.3.2 This module shall provide a communicating facility for users of doors managed by the ISMS. The Messaging System shall enable posting of short messages to Reader Interface Units, thereby allowing cardholders to read them at their door access-points upon badging or swiping their cards at any access point attached to the system.

2.10.3.3 Only a keypad-display LCD device shall be applied alongside this module to facilitate for message reading.

2.10.3.4 Upon starting up the module, the system shall automatically synchronize stored message information (deleted, read or un-sent messages) between its database and that stored at the Advance Networked Controllers. However, the user shall have the option of synchronizing message information between server and controller databases at any time without restarting the module.

2.10.3.5 A standard function of the module shall be the creating and editing, deleting and sending of messages. There shall be an option for addressing messages according to user name or card number (by range or by individual) without requiring the user to enter specific destination access-point data as the system shall resolve this data automatically.

2.10.3.6 Retention of messages in controllers shall be managed by specification of a time limit in hours, or by the availability of record space before the automatic overwrite of the oldest stored message with a new message. The system shall allow an alternative option for a warning message to be sent to the Operator, in event of storage buffer becomes full before the auto-deletion of un-read messages. A third option is the sending of a warning message to alert the operator once a user pre-defined limit of stored unread messages (expressed in percentage) has been reached over a certain specified period.

2.10.3.7 Generation of reports shall be an available facility, for message tracking, with the aid of calendar for date and time selection.

2.10.3.8 The system shall store a maximum of 99 single-line messages in the standard SQL database server before having them dispatched to operating access-reader points. A single line message holds up to 16 characters (alphanumeric). Each of the 99 messages shall be designated to only ONE cardholder, but one cardholder may receive more than one message at a time.

2.10.4 Guard Patrol Tour Module

2.10.4.1 This module shall provide the Operator at any client station of ISMS, to observe on the computer screen the guard patrolling activities. Card reader stations shall be usable by the guards as tour stations. Both normal and anomalous events shall be displayed on the computer screen in a combined graphical and tabular form.

2.10.4.2 In the graphical display, icons shall be tagged to each tour station to indicate if the station has been visited on time, too early, too late or missed. The tabular information shall show the next tour station where the guard is supposed to be visiting.

2.10.4.3 All configured Reader Interface Units shall be applicable as guard tour stations. The guard shall use a card, programmed as a Guard Tour Card, to 'register' or 'clock-in' his presence during a pre-programmed tour route.

2.10.4.4 A programmable audio alarm shall activate if a guard does not clock at any particular stations within a specific time.

2.10.4.5 As a guard performs his tour at the respective tour stations, the system shall log the tour transaction into the database along with station name, date and also remarks of lateness, too early or missed station.

2.10.4.6 The system shall be able to track the progress of the guard performing the tour in real-time. It shall present the actual arrival time at each tour station versus the intended time of arrival.

2.10.4.7 The guard tour tracking software shall display graphical icons showing all the tour stations, and icon represented by the change of color shall denote the guard's arrival of a station presented on floor map.

2.10.4.8 Generation of reports to list all pre-programmed tour routes shall be possible during, before or after touring activity.

2.10.4.9 Generation of reports to list both past or present tour transactions shall be possible, for the purposes of monitoring touring performance.

2.10.4.10 The software shall not impose limitation on the number of tour routes (that constitute touring stations) that can be pre-programmed. Each pathway shall be made up of two connecting tour stations. Each tour route shall be configurable by one or several pathways.

2.10.4.11 Pathways and tour routes shall be programmable up to a maximum of 30 characters long.

2.10.4.12 It shall be possible for guards to run multiple tours within a day and by any pattern of tour routes, without the need to prefix them to specific day of the week.

2.10.5 Visitor Management Module

2.10.5.1 This module shall provide an access control system, for non-regular access-users, handling frequent card issuance and return activities, where usage period is a concern.

2.10.5.2 This module shall perform auto executing to Reader Interface Units, the Add and Delete card commands by referring to a pre-defined date and time. System shall ensure for date and time validity and expiry date/time must be greater than start date/date.

2.10.5.3 It shall minimize keyboard input by enabling an Operator to program automation, to handle start and expiry dates. It shall also allow date selection by mouse click on calendar display.

- The automation method shall apply four basic choices for the auto setting of 'start' and 'expiry' in the following table. The choices shall be independent for 'start' and 'expiry' dates.
- The Tenderer shall recognize for the proposal of customization for furtherance, from the rendered basic automation, in accordance to needs.

Handling Methods	Application		Specification
	Start	Expiry	
Now	Y	N	System shall apply default PC's date and time for the issuance but require Operator to state expiry date. 'Now' indicates that Card shall be usable upon issuance.
User defined	Y	Y	'User defined' indicates that Card shall be usable as determine by user's requests. System shall apply default PC's date and time, and require Operator to state 'expiry date' or to change 'start date'.
At the end of the day	Y	Y	Time shall have to be specified by Operator. System shall apply default PC's date and require Operator to specify expiry date, or pre-specify 'User define' or '24 hours from now'.
24 hours from now	Y	Y	System shall apply addition of date base on PC date.

2.10.5.4 Access control shall be managed by time and floor zone. Specification for access management by time shall be referenced to the clauses under Door Access Control while the specification for floor access management shall be referenced to clauses under Lift Access Control.

2.10.5.5 All cardholders shall be defined under 'visitor' category, segregated from 'permanent' category, in order to ease the management of cardholders. This system shall also apply 'temporary' card management.

2.10.5.6 System shall provide storage and functional facilities, for visitor detail information such type, profile, remark and visit purposes, tagged by a single ID (Visitor ID). At issuance, these information shall be linked to individual visitor cardholder for reference.

2.10.5.7 Issuance and returning of card shall be carried out on a one-by-one basis, in continuous manner, and shall not be handled by batch.

2.10.5.8 There shall be 'temporary' card issuance facility to handle abnormal situation such as lost or damaged cards. Recovered cards shall be re-cycled for new users while 'temporary' cards are returned.

2.10.5.9 It shall be possible to enable and disable individual 'visitor' card for security purposes instantly, through a simple select and mouse click.

2.10.5.10 For monitoring or contact purposes, visitor's accessed points shall be traceable, using known card numbers or Visitor ID. Specification of location/area shall be referenced to the clauses under 'Areas and devices configuration and allocation design'.

2.10.5.11 The system shall provide reporting facility. Access transactions of individual visitors shall be traceable by the listing of date/time, Visitor ID and card number. History of issuances and returns of cards shall be retrievable by 'daily' or 'monthly' requisition. Likewise, all anomalous cards (either lost or spoilt) shall be reportable by issued dates, or on 'daily' or 'monthly' basis.

- It shall be possible for all types of reports to be generated according to the order of card number or date.

2.10.5.12 An audit trail of activities at workstations such as date and time for login and log-out, as well as date and time for cards issuance and return, shall be made available for inspection purposes.

2.10.6 Asset Management Module

2.10.6.1 This module shall provide an inventory system for the management of mobile assets or properties of premises. Belongings shall be registered and retrieved through a barcode system.

2.10.6.2 There shall be a facility to configure the applying barcode method, to generate barcode as well as to print generated ones.

2.10.6.3 The Assets Management software shall resolve the storage of data on scanned assets and access-users. If so requested, the Tenderer shall make available to access-users the Reader with Reader Interface Unit. Such application shall further (1) assure that only authorized users can procure the assets and (2) eliminate the need of keyboard input.

2.10.6.4 System functions for adding, editing, deleting of asset records shall be provided in Windows environment. It shall make possible for inventory categorization to ease management.

2.10.6.5 It shall include movement tracking (or transaction) of assets by the specification of retrieved or returned status, as well as specification of detail information such as expected return date, authorization, access-user related information, and description and condition/status of asset.

2.10.6.6 All registered asset records and transactions shall be reportable and printable. Report making shall be selectable by user, location of asset or reported status (such as missing, malfunction or damaged).

2.10.7 Photo-ID Badging Module

2.10.7.1 This module shall provide a facility for ISMS users to make their own card design. This shall be especially useful for institutions or organizations where, seasonally or annually, a large quantity of new cards is required.

- The Tenderer shall be obligated to facilitate the order of required cards in the format as required for Proximity, Contact and Contactless Smart Card, Wiegand, Magnetic, Bar Code or Touch Memory Reader.

2.10.7.2 The software shall be operated in Windows environment, and shall constitute standard drawing tools, speed button bar and design storage.

- The drawing tools shall include picture uploading, drag and drop mechanics and free-hand drawing, and the color, font and shape selection facilities.
- Designs shall be able to be stored at any computer location, and able to be edited as and when they are required.

2.10.7.3 Cardholder data

- It shall be possible for detail information of required cardholders to be retrieved from central database, and hence eliminating the need to re-registering them.
- Alternatively, it shall be possible to import data file in ASCII format; and that ISMS shall automatically convert them and save them into the central database. On the other hand, data from the central database shall be exportable in ASCII format for third party uses. The Tenderer shall be obligated to advice about such files to users.
- The relevant parameters of retrieved data shall be selectable for the card identification as required by the rules of premises.
- Each card shall be able to be associated with its unique photo file and the association shall be able to be saved and retrievable.
- For printing, particular card design shall be retrievable as a template for cardholder data and photo insertion, which in turn automatically being fitted in accordance to the defined design.

2.10.7.4 Source of cardholder photographs

- The system shall be capable of configuring with either a digital camera or a scanner in order to obtain photographs. The Tenderer shall facilitate for such need or advice about the compatible scanner and video and frame capturing board.
- The system shall provide minimum standard facility to enable captured images / photographs for adjustment. The facility shall include brightness and contrast, scaling of width and height, as well as auto balancing for colors.

2.10.7.5 Printing and printer compatibility

- It shall be possible to print cards by the batch with selectable range, specifying by card number, name, department, and position or staff/user number.
- The Tenderer shall facilitate for the card printer or advice about it, for its implementation with the software.

2.10.8 CCTV Control and Monitoring Module

2.10.8.1 This module shall be applied for PC stations connected to a TCP/IP LAN/WAN network, for the viewing of network-connected Closed Circuit TV remote camera streamed video footage and/or still images.

Data Communication

2.10.8.2 ISMS shall provide both client end and server software for the CCTV system.

2.10.8.3 Seated on a LAN system, the CCTV client software shall be able to configure and communicate with any CCTV software video servers or alternatively with third party hardware video servers. Both server parties shall be configurable to a CCTV system.

2.10.8.4 The client end of CCTV system shall be an ISMS PC workstation running with a CCTV monitoring software module that operates in Windows environment.

2.10.8.5 The general presentation of graphical interface of the module shall be able to be customized according to system user's requirement.

2.10.8.6 The software server shall reside at any nominated ISMS or independent PC workstation linked to a LAN.

2.10.8.7 Any mentioning of both the hardware and software server herein shall be referred as the 'CCTV server'. There shall be no technical limitation to be imposed by ISMS for the allowable number of CCTV servers. However, the number of CCTV software servers or client modules shall be confined by purchase.

2.10.8.8 Each CCTV server shall be obligated to gather digital images from its connecting group of cameras via a multiplexer.

Imagery display

2.10.8.9 The digital imagery display alone shall be presentable on CCTV monitoring client workstation or Network Explorer.

2.10.8.10 The CCTV server shall also be able to receive instruction for the switching of particular camera, for imagery display at PC station, base on predefined instructions. The switching of camera shall be triggered only either in sequence or by reaction and they are exclusive of each other.

2.10.8.11 Switching of camera by sequence.

- It shall be possible for an Operator to set the sequences of all cameras, irrespective of their binding CCTV servers. This means that each CCTV monitoring PC station shall have control over all registered CCTV servers. The switching sequence shall be able to be initiated or terminated from the monitoring station.

2.10.8.12 Switching of camera by conditional reaction.

- It shall be possible for an Operator to predefine some conditional reactive instructions, that upon occurrence of any certain selective event at specified IACs, a particular camera shall be switched over for imagery display at PC station.

Output execution

2.10.8.13 The CCTV module shall provide a supplementary feature for the triggering of output devices such as alarm or particular door access control, upon occurrence of specific camera switching.

Alarm acknowledgement

2.10.8.14 It shall be possible for an Operator to make an acknowledgement of a triggered alarm, alternatively from the CCTV monitoring software, instead of the security monitoring software.

Camera Pan-Tilt-Zoom controls

2.10.8.15 Each motion or any user-defineable functional control of individual camera shall be controllable by the pressing of a button on the PC keyboard. For visual guidance, the user of CCTV system shall be liberated to make association and apply any kind of pictorial icon to represent each of the motion or camera function. The pictorial icons shall be user-definable.

2.10.8.16 With the exception of graphical related data, all parameters concerned, as specified in the preceding clauses shall be stored at the ISMS central database.

Reporting

2.10.8.17 The CCTV system shall provide a minimum audit trail reporting function on the activities undertaken at all CCTV workstations, and this includes acknowledged alarms. All audit trail records shall be stored at ISMS centralized database.

Video recording

2.10.8.18 The standard ISMS CCTV system shall exclude video recording. The Tenderer shall be obligated to advice or configure for the system user a third party video recording or digital base computer recording system that meet the individual requirement of recording frequency and image sharpness.

Section 3.0: The Individual Hardware of the System

3.1 *PC Configuration for Server and Client*

3.1.1 PC for the operation of ISMS shall require the following capacity. However, actual requirement shall be advised by the Tenderer dependent to specific application and usage.

	Server	Client
Processor	Minimum Pentium III 600 MHz PC	Minimum Pentium III 600 MHz PC
RAM capacity	128 MB	64 MB
Floppy Disk Drive	at least on 3.5" Drive 1.44 MB	At least on 3.5" Drive 1.44 MB
Hard Disk Drive	10.2 GB (New Disk)	10.2 GB (New Disk)
CD-ROM Drive	Latest version	Latest version
Sound card	16-bit	16-bit
Monitor	17" color SVGA	17" color SVGA
Communication Ports	Two for RS-232 cables	Two for RS-232 cables
Printer Port	Required for HARDLOCK dongle	Required for HARDLOCK dongle
Mouse	PS2	PS2

3.1.2 Software of Integrated Security Management System

3.1.2.1 With the provision of relevant software version, client stations shall be defined as workstations capable of carrying out regular monitoring and information maintenance operations, depending on provided accessibilities by appointed administrator of the system.

3.1.2.2 With the provision of relevant software version, server station shall be defined as the central database holder of the integrated security management system with SQL engine. Such computer station shall be able to carry out operations as would of a client workstation as well as managing of transacting data and storing of data.

3.1.2.3 The server station shall carry out communication with destination access controllers either directly via Front End Processor by applying communication ports, or by way of Terminal Server (TS) seated on a LAN.

3.1.3 SQL database engine

3.1.3.1 The system shall employ relational database such as Microsoft SQL Server. The Database Server shall also be ODBC compliant.

3.1.3.2 Database queries shall be fully automated by the system software mediated by user-friendly interfaces.

3.2 *Advance Networked Controller for Lift, Door, Time Clocking and Car Park*

Highlights of stand-alone interactive / output features at Advance Networked Controller for lift, door and car park

1.1.1 Each controller shall be able to operate independently on a stand-alone mode without the need to be connected to any terminal or PC. On the other hand, multiple units of the controllers shall be able to be linked directly to a PC operating with compatible Security-based software using standard TCP/IP network protocol cabling and connection architecture.

3.2.1 Access vehicle by Card

3.2.1.1 It shall be possible to program individual cardholder name at the Advance Networked Controller without using a software at a connecting PC. Designated string size for each cardholder shall be 50 characters.

3.2.1.2 System shall allow direct or offset reading of card number. Reading size shall be 10 digits. There shall be a provision of customer code to decrease the probability of duplicate card usage.

3.2.1.3 It shall provide PIN reading choice (either manufactured or user-defined) to enhance security control.

3.2.2 When being stand-alone, each Advance Networked Controller shall be capable of automatically switching the access mode at different times of the day.

3.2.2.1 'Free' mode: Door is unlocked. No card entry shall be required.

3.2.2.2 'Secured' mode: Door is locked. Successful card attempt shall be required for valid entry. Door re-secures after access attempt.

3.2.2.3 'Secure + PIN' mode: Door is locked. Card and correct PIN number attempt shall be required for valid entry. Door re-secures after access attempt.

3.2.2.4 'PIN Only' mode: The system Operator determines what the PIN number will be and programs this into the system. Access is allowed through the door when the correct 4-digit PIN is pressed.

3.2.3 Reporting

3.2.3.1 It shall be possible to print reports from the controllers directly by connecting to a printer (via a communicating device) without using a PC.

3.2.3.2 The reports may be specified for any valid range of dates and can be selected by any of the following types to be printed with or without names:

- All transactions, with or without name for each card holder
- Alarm transactions only.
- Transaction of a specific holder.

Reserved general facilities at Advance Networked Controller only for Lift, Door and Car park, Time Clocking

3.2.4 ISMS shall reserve the following facilities to be configurable and controlled at Advance Networked Controller only and not from the software.

3.2.5 Keypad Programmable

3.2.5.1 All the Advance Networked Controller's functions are completely programmable from the keypad and LCD display.

3.2.5.2 A 6-digits Master PIN shall be provided to allow administrators to access the programming mode of ANC.

3.2.6 There shall be a provision of 3 types of cards for specific purposes:

- **Special card** shall allow for arming and disarming of inputs, and activating and deactivating of outputs.
- **Guard Tour card** shall allow for the Guard to patrol the defined route and point without activating the door.
- **User card** shall allow general users usage for regular access granting at access-devices.

3.2.7 Data Storage Capacity

3.2.7.1 Each standard Advance Networked Controller shall be able to store up to 20,000 latest transaction-records.

3.2.7.2 Each Advance Networked Controller shall be constrained by the specification of storing up to 33,000 cardholders expandable to 100,000 with memory upgrade option (where each is associated with a time zone).

3.2.8 Keypad Lock-out

3.2.8.1 It shall be possible to set the maximum number of times (up to 7) a card user is allowed to consecutively keying in wrong PIN code before locking the keypad. Once locked-out, the only way to reactivate the card shall be deleting it off the IAC and re-issuing it.

3.2.9 Dual Card Access (Escorted Mode)

3.2.9.1 This command shall enable the installation of two categories of user cards and the programming of Advance Networked Controller in granting access, using two valid cards from either category, that are to be swiped or badged consecutively. It shall also be possible to configure to grant access for one valid card from either category.

3.2.10 It shall be equipped with a facility for connection to:

- LAN;
- Reader Interface Units;
- External Field Device units;
- Power supply;
- Tampering switch;
- AC failure and Battery low detection and
- 3 sensors inputs for operational status monitoring, and 1 General Purpose output.

3.2.11 Sensor Alarm Inputs

3.2.11.1 It shall be possible to program the activation of Alarm delay time range between 0 and 99 seconds.

3.2.11.2 Interlocking for the disabling of a door access whenever a counterpart door is already being accessed.

3.2.12 Control for Outputs

3.2.12.1 The Advance Networked Controller shall be equipped with the following Alarm output commands:

- Duress Alarm: This output shall be activated by pressing special code on keypad to execute duress signal.
- Door Open Alarm: This output shall be activated when protected door is forced open, or door is left open beyond restrictive period.

3.2.12.2 The 16 General Purpose outputs may be activated in 3 ways:

- By holders of privilege cards;

- Automatically by timers. The program shall be able to switch on/off the outputs twice a day with different timers for each of the week and on holidays;
- By events occurred in the system.

3.2.12.3 Any events activated at controller shall be possible to trigger any of the General Purpose Outputs. Outputs can be activated in the following patterns:

- Short activation (0.5 or 1 second)
- Multiple Short Activation (3 1-second activation)
- Pulse activation with user definable duration

3.2.13 Each Advance Networked Controller shall be facilitated with self-testing commands for memory, configured keypad, Reader, input and output points, communication, and display.

3.2.14 Each Advance Networked Controller shall be also be able to allow access to the full programming menu through the TCP/IP LAN from a PC running TELNET client. The TELNET menu shall always be protected with login password.

3.2.15 Lift controller only

3.2.15.1 The unit shall constitute interface electronics and relays for linking to floor selection buttons of the lift. Each unit shall be able to serve up to 16 floors and expandable to 64 floors of a lift.

<u>The hardware basic configuration</u>

3.2.16 Each Advance Networked Controller shall have its own 32-bit High-performance Intel 386EX Microprocessor and shall be able to perform all access control functions, card user management, etc. without the need to interface with another external or third party device.

3.2.17 Each controller shall be capable of communicating with a central server and other network devices for the logging of data and receiving of instructions via a built-in high-speed Ethernet LAN Interface Adapter with RJ45 connector.

3.2.18 It shall have a built-in 4 by 4 programming keypad. All functional instructions can be directly entered by using the keypad.

3.2.19 It shall have an LCD (Liquid Crystal Display) that presents 2 rows of display, each 20 characters.

3.2.20 The controller shall operate on a 12V/5V 2.5A switching power supply.

3.2.21 An on-board battery that lasts for at least 7 days in event of power failure shall enable holding of data in memory and operation of a real-time clock.

3.2.22 It shall have full intelligence for granting access, base on validity of card and of time zone.

3.2.23 The Reader unit may be any of the following types as specified by the client:

- Bar Code Reader
- Magnetic Card Reader
- Wiegand Swipe or Insert Reader
- Proximity Reader
- Smart Card Reader
- Contactless Smart Card Reader

3.2.24 At request, a keypad shall be provided with the reader unit. Such unit shall be equipped with 12-key with a built-in 4-digit of 7-segment LED display. The keypad may be an added security to the lift system. The Advance Networked Controller shall have the option to only respond if both the card and PIN code match.

3.3 *Reader Interface Unit (RIU)*

3.3.1 The RIU shall provide:

3.3.1.1 For two pairs ('IN'/'OUT') access readers interface; the 'OUT' Reader shall be differed from 'IN', in that it shall not support PIN requirement.

3.3.1.2 For inputs (to support door sensor, exist push button, overriding key-switch and tamper) and outputs (to support door latch, duress alarm and door open alarm).

3.3.2 It shall not hold records of cards or access transactions, acting as a slave controller to its master ANC. An ANC shall be configurable to 4 RIUs.

3.3.3 RIU shall be installable away from the location of its Lift, Door or Car park access Readers.

3.3.4 Hardware specification of RIU

- CPU: 8-bit CPU (68HC11) with 128K ROM and 8k RAM
- Communication: 4 wires RS485 Interface (+V, -V, Data+, Data-)
- Peer-to-peer collision detection protocol (E-BUS)
- 2 pairs of access interfaces, each for IN and OUT readers
- Reader Type: Proximity, Contact and Contactless Smart Card, Wiegand, Magnetic, Bar code, Touch memory
- Inputs/outputs: 2 pairs of 4 inputs and 6 outputs (shared between the specified access interface).

3.4 *External Field Device (EFD)*

3.4.1 The Advance Networked Controller (ANC) shall be able to link to a group of External Field Device (EFD) units in order to enable ISMS to set controls over electrical application of a building. Each ANC shall support a maximum of 8 units of EFD units. Each EFD shall provide input and output relay points for the connection of appliances such as alarm, thermal sensor, smoke detector, water sprinkler, laser devices, and other building electrical appliances or facilities such as lighting, heater and air conditioning.

3.4.2 Each EFD may be located in hidden location of building floors in accordance to individual propose specification.

3.4.3 It shall require an independent power supply. It shall be able to sustain its state of operations, not being affected by the mechanical or power failure of ANC. Its maximum installation distance away from ANC shall be one kilometer.

3.4.4 Each EFD shall be equipped with 16 supervised sensor inputs and 16 relay outputs. It shall be able to

3.4.5 Hardware specification

- Based on 8-bit Motorola HCMOS single chip MCU
- 16 supervised inputs with 3 states : Normal, Open, Short
- 16 relay outputs points on board
- 24 digital outputs to drive LED lights or external relays
- Packaging :
  - Mild steel metal box with dimension : 350(H) x 240(W) x 80(D) mm
- Power Supply : 12VDC with 3Amp charger
- Power Consumption : 1 amp during operation
- Operating Temperature : 0°C to 50°C
- Humidity: 10% to 90% non-condensing

3.5 *Card Readers*

3.5.1 Card reader shall be the standard employed access method for the system.

3.5.2 A range of Reader technologies shall be employed, which encompass Magnetic Swipe, Proximity, Barcode and Smart Card (both contact and contactless).

3.5.3 Two options of Reader shall be provided for Proximity technology, namely:
- A long range proximity reader with at least 710 mm reading range; and
- A Proximity Reader with at least 100 mm reading range.

3.5.4 Each Reader shall be connected to a Reader Interface Unit (RIU), which acts as an interface to allow data communication between the Reader and the Advance Networked Controller. The ANC holds a local database of authorized cardholders as well as the control functions needed to enable the Reader to operate. While in general, Readers must be mounted near entrance or exit points, while its connecting RIU shall be allocated in a secure area nearby. The distance between Reader and RIU shall not exceed 100 feet. The distance may be shorter depending on the Reader technology, the type of cable to be applied, and the strength of surrounding environmental electromagnetic effects in the premises.

3.5.5 Each reading shall be checked based on at least one of the following criteria:
- Customer code
- Card record in database
- Access level (that shall be determined by authorized Reader and time)
- PIN (if PIN entry is required)
- Application of anti pass-back (either globally or locally)

3.5.6 Any Proximity Reader proposed by Tenderer (if requested by customer) shall be install-able directly onto a metal surface such as aluminium architrave without substantial loss of reading range.

3.5.7 Each Reader shall be identified independently at computer server station by means of a unique tag name. The tag name shall be at least 12 characters in length.

3.5.8 The Reader shall have a visual indicator (LED) on the front face that illuminates during normal standby operation. The illumination shall include the change of color that indicates for card readability.

3.5.9 The Reader shall provide the following "anti pass-back" features.

3.5.9.1 Local controls with entry-exit controls of individual access-points.

3.5.9.2 Global controls with entry-exit, entry-entry or exit-exit controls that involve several access-points of an area or a zone, where all access-points involved shall share a single front-end processor.

3.5.10 Response time to access reading (or the completion of access attempt) shall not exceed 1 second. The completion of the access attempt shall be defined as the audible and visual acceptance of the card or token presentation; or if enforced, the completion of PIN entry if PIN mode is enforced.

3.5.11 PIN reading responses

3.5.11.1 Readers with PIN keypad shall include a 7-segment display that would provide the following feedback for:
- The prompting of message to enter PIN;
- Access attempt success or failure (with or without the usage of PIN).

3.5.11.2 Every incorrect PIN attempt shall be notified at the central controller as an alarm condition.

3.5.12 Duress alarm

3.5.12.1 Duress alarm entry facility shall be provided if integrated keypad is used for PIN entry.

3.5.12.2 Duress shall be initiated by the cardholder by the simple additional of a unique press-key-number to their PIN number.

3.5.12.3 No "Duress Entry" indication shall be displayed at the reader 7-segment display or LCD.

3.6 *Cards*

3.6.1 ISMS shall be card access oriented.

3.6.2 The system shall provide a wide range of readable cards conform to the available Reader technologies.

3.6.3 Due to large variation of card protocols in the market, if deemed necessary, the Tenderer shall be obligated to provide technical advice on customer-selected card type with prior testings in regard Reader and Card compatibility during system purchase.

3.7 *The Use of Biometric Technology*

3.7.1 Proposal for the use of biometric technology in conjunction with card access oriented system may require the Tenderer to cooperate with a third party supplier for purchasing, planning and commissioning.

3.7.2 Should there any of such technology be used, the Tenderer shall expect a mediating-system in either hardware or software, to translate biometric related data class to conform to the protocol of ISMS, pertaining to the Tenderer. The detail protocol shall be advised by the Tenderer to relevant project handling stakeholder.

3.7.3 The Tenderer may alternatively apply the system supplier's biometric product, which shall be specific to fingerprint recognition integrated with card and pin application.

3.8 *Keypad Reader*

3.8.1 The keypad reader shall be defined as a keypad with Reader unit. Such unit shall be equipped with 12-key with a built-in 4-digit of 7-segment LED display. The keypad may be an added security in which the lift, door or car park barrier will only respond if both the card and pin matches.

3.8.2 Alternatively, keypad Reader with additional LCD shall comprise of a 3x4 Rubber Keypad and an LCD that displays message. This Display-Keypad shall be used to provide understandable Reader status information.

3.8.3 By using the firmware of IAC with extended memory and in conjunction the sub-module called **Messaging** specified in Section 2 it shall allow for the display of mail-messages for each cardholder. This shall be especially useful for sending notices to cardholders in very large premises having many access-points.

3.8.4 Display-Keypad usage shall include user-defined for mail messages (maximum length 16 characters) and activity of access-transaction messages.

Section 4.0: An evaluation of the communication methods applied in domain devices and computer station.

4.1 Telnet program

4.1.1 The ISMS shall include a supplementary program in the Advance Networked Controller system for authorized technical engineers. It shall be for the purposes of troubleshooting and system tuning before and after system commissioning, and in aiding maximization of systems efficiency on real-time data transaction.

4.2 Self maintenance under heavy LAN traffic environment and sustenance of continuous operation without the need of periodical system shutdown

4.2.1 The ISMS shall be featured with a self-maintenance system to operate in extreme heavy LAN traffic environment. It shall be able to carry out continuous operation, without the need of system shutdown.

4.3 Synchronized Clocking

4.3.1 It shall be possible to trigger clock synchronization to all defined controllers that operate with clock in order to minimize time differences of not more than 5 seconds among all devices and computer stations, especially for large scaled ISMS.

4.4 Standardized databases that seat on devices and computer central station

4.4.1 Database structure of devices and computer central station shall be standardized, in maximizing processing efficiency, although effective and manipulative information uses may be maximized in ISMS software.

4.4.2 Consequently, the Tenderer shall be at its discretion to decide for software customization in fulfilling the needs of customer, bearing in mind compatibility issues and the minimum software requirements of the ISMS.

4.5 System Database Manager (DB Manager) and Database engine

4.5.1 The proposed database shall be a relational database compliant to Microsoft Open Database Connectivity (ODBC) by using Structured Query Language (SQL) as its engine in order to allow expandable database usage. It should be powerful and robust enough to accommodate a large number of accesses and consistent data communication over Wide Area Network architecture.

4.5.2 ISMS software shall be a mediator between central database and system user and between its networked access devices and system users. Every query or data manipulation commands shall be handled by the software in a user-friendly, GUI interface-equipped windows environment. The DB Manager shall be the database server of ISMS to retrieve, to write or to delete data, with requests pass on by the Messaging Server of the system to Advance Networked Controllers.

4.6 Uploading of data to and downloading of data from central server station

4.6.1 The Advance Networked Controller shall be a servant for sending instructions received from ISMS client workstations and receiving data packet from access-devices and input/output devices to be sent to ISMS client workstations.

4.6.2 The server at central station shall be a servant for managing data traffic between client workstations of ISMS and Advance Networked Controllers connected on the same TCP/IP compliant Local Area Network infrastructure as well as remote data communication lines to other networks.

4.6.3 All defined Advance Networked Controllers shall transmit data on parallel timing, to central server station. The software server of ISMS shall then process the streaming-in data, on priority basis. This shall minimize the discrepancy period between actual occurrence of highly prioritized alarm and the issuance of notification on screen display to system operator.

4.6.4 ISMS system shall apply First-In-First-Serve method to process the regular transaction accesses received from all units of Advance Networked Controllers for on-line notification.

4.6.5 Once being uploaded, regular update of cardholders information from server to Advance Networked Controller shall be carried out at all times, as a background cyclic processing. This shall consequently eliminate the need to re-execute the command for every addition or change in the network status or configuration.

4.6.6 Upon every cardholder registration at ISMS central station, the PC shall be responsible to execute 'immediate update' command to new cardholder at remote controller. This shall be a distinct feature to overcome the possible delaying effects of background cyclic processing if the system detects immediate access. 'Immediate update' shall always be applied to deleted cardholders to compliment the maintenance of security system.

Section 5.0: Highlights of ISMS in providing security controls

5.1 Card number and personal code number or hand reading

5.1.1 The application setting of customer code, 4-digit code category selection and registration of hand reading shall only be undertaken at individual access controller, but not via software server or client station that may cause direct overwriting of those security information.

5.2 Data and System Backup

5.2.1 System shall allow with liberated choice the central database system to be backed up by administrator at any frequency and computer location suitable to operational pattern and rules of particular premises.

5.2.2 The Tenderer shall advice and assist in the use of backup computer and battery system to ensure ISMS provides sufficient time to serve the access needs of users in premises, in time of main power failure or emergency.

5.3 Logging and tracing of activities and displaying information with on-line status

5.3.1 The system shall provide a facility for the recording of command activities executed at all system workstations to be stored into a central database.

5.3.2 The system shall permit safety controls, for management of operators and safety officers in times of emergency. As an option, the system shall provide a functional facility to allow real-time census taking of the users in premises at system defined areas/locations and also the listing of accesses by name and card numbers.

5.3.3 The system shall provide on line or real-time data transactions from all defined sites irrespective of device distance or locations, as long as the devices are connected on LAN or WAN network. The mentioned devices shall encompass all types as defined in Section 1 that include domain access-points, security-sensor and output (electrical accessories or alarm) devices.

5.3.4 The system shall facilitate instant representations at active ISMS or monitoring workstations that reflect any change in condition in the secure environment detected by devices or changes in the devices themselves, using pictorial icons and audible alarms.

5.4 Configuration with external devices

5.4.1 The system shall provide a large number of sensor input and output connecting points and allows device installation in all locations of the premises. The purpose of this is to accommodate the liberal deployment of a vast range of security devices in any physical and/or logical configuration humanly conceivable.

5.5 Access inhibition and Permanent lock release

5.5.1 The system shall provide an access inhibition command that can be designated to target access-points, with the purpose of barring entry and exit activities.

5.5.2 The system shall provide permanent lock release command that can be designated to target access-points, with the purpose of providing free access, under emergency events.

5.6 CCTV

5.6.1 The establishment of CCTV system with real-time picture streaming shall be the limited provision of ISMS. In order to maximize security control, the Tenderer shall recommend that the use of CCTV be liaised with a third party video capturing device or computer to make recording with picture sharpness-capacity, and at frequency in the preference of customer.

5.7 Guard Tour

5.7.1 The system shall provide precautionary safety control to designated premises tour-guards by real-time tracking of their inspected access-points in monitoring their rounds timing, having them displayed on screen at any computer stations of ISMS.

5.8 Anti pass-back

5.8.1 The system shall provide both localized and globalized anti pass-back functions in the prevention of sharing access cards among premises users and non-users that may unnecessarily affect security management in general or safety controls in the event of emergency.

5.9 Access by time zone

5.9.1 The system shall have absolute control over the accessibility of users by means of time zones, thereby eliminating their unsupervised presence in premises.

5.10 Limiting Operators on system function accessibility and the control of system exposure

5.10.1 The system shall allow the control of accessible function categories to be imposed on Operators thereby eliminating accidental or unauthorized change of parameter settings that may affect users accessibility and safety of premises.

5.10.2 ISMS Client control/database interfaces running on any workstation shall automatic log-off if the keyboard and mouse remain inactive beyond a specified idle period in accordance with access security protocols of particular organizations.

5.11 Alarm handling under heavy access traffic condition

5.11.1 During system slowdown, the ISMS shall, for the purpose of communicating data to the ISMS central server station, be designed to give priority to alarm notification messages (by default) unless otherwise specified during device configuration. Message transmission time should not exceeding 5 seconds, in accordance to industrial standards, with a time discrepancy allowance for clock synchronization to devices in remote locations.

Visitor Cards	These cards are meant for visitors to a secure area. They have a short expiry date, usually a day, a few hours or even a one-use card that expires once the cardholder leaves the secure area. They are also restricted in terms of the areas in which they may access.
Guard Tour	Guard Tour cards are used specifically with the Guard Tour Module previously described (see above). It is essentially a User Card that is recognized by the Guard Tour module.

Operator Decision Support

Operator Decision Support is activated upon Matrix V detecting a pre-determined event on the security system, such as a forced door. It suggests courses of action to the guard, such as:

1. Summoning the police.
2. Deploying guards at the alert location and along the intruder's possible route(s).
3. Sealing off nearby doors and alerting/evacuating staff.

This function is meant to supplement the normal training provided to security personnel when responding to such situations by providing a checklist of critical actions that need to be taken.

ELID TECHNOLOGY
INTERNATIONAL PTE LTD



TECHNICAL DATA SPECIFICATIONS - ESOFNET

- Controller Panel
- Card Reader
- Contactless Smart Card Reader
- Keypad Display
- Reader Processing Unit
- Data Gathering Panel
- Terminal Server
- Intelligent Field Device
- Integrated Security Software
- Power Supply Unit
- Emergency Brake Glass
- Acid Sealed Lead Battery
- Magnetic Contact
- Electromagnetic Lock Device
- Override Switch
- PC Server Unit
- PC Workstation Unit

Controller Panel

Model	EL2200
Manufacturer	ELID Sdn Bhd
Country of Origin	Malaysia
Microprocessor	8-bit HCMOS running at 4.9 Mhz
Card Users	4,000 (with 32KB SDRAM) Local / 12,800 Local (with 128KB SDRAM)
Transactions	4,000 Local
Memory	32 KB/128 KB SDRAM
Modes of Operation	Card & Card+PIN
Standalone Operation	YES
Type of reader supported	Barcode, Magnetic, Proximity, Smart Cards, Biometrics, Touch Memory
Max. readers supported	2
Display	2x20 alphanumeric
Connectivity	Multi-drop
Operating Temperature	0C to 60C
Humidity	10% to 90% non-condensing
Power Requirements	12VDC 100mA excluding reader
Casing Dimensions	190(H)x159(L)x50(W)
Certification	CE

Model	EL2205-001
Manufacturer	ELID Sdn Bhd
Country of Origin	Malaysia
Microprocessor	8-bit HCMOS running at 4.9 Mhz
Card Users	4,000 (with 32KB SDRAM) Local / 12,800 Local (with 128KB SDRAM)
Transactions	4,000 Local
Memory	32 KB/128 KB SDRAM
Modes of Operation	Card & Card+PIN
Standalone Operation	YES
Type of reader supported	Barcode, Magnetic, Proximity, Smart Cards, Biometrics, Touch Memory
Max. readers supported	2
Display	2x20 alphanumeric
Connectivity	RS485,modem, fiber optic, lease line
Operating Temperature	0C to 60C
Humidity	10% to 90% non-condensing
Power Requirements	12VDC 100mA excluding reader
Casing Dimensions	383(H)x330(L)x90(W)
Certification	CE

Card Reader

Model	ER0923-002
Manufacturer	ELID Sdn Bhd
Country of Origin	Malaysia
Reading Range	Up to 12.5cm (5")
Transmission Frequency	125 KHZ
Communication Output	Wiegand
Anticollision	NO
Audio Tone	Beeper
Indicator	Tri-Color (red, green, amber)
Operating Temperature	0C to 65C
Humidity	10% to 90% non-condensing*
Power Requirements	5VDC
Casing Dimensions	110x90x35 mm
Certification	CE

Contactless Smart Card Reader

Model	ER0680-S02
Manufacturer	ELID Sdn Bhd
Country of Origin	China
Reading Range	Up to 7.5cm (3")
Transmission Frequency	13.56 Mhz
Communication Output	Wiegand
Anticollision	YES
Audio Tone	NO
Indicator	NO
Operating Temperature	0C to 60C
Humidity	10% to 90% non-condensing
Power Requirements	5VDC
Casing Dimensions	110x90x35 mm
Certification	

Keypad Display

Model	EK9S
Manufacturer	ELID Sdn Bhd
Country of Origin	Malaysia
Display	4x7 segment LED Display
Keypad	12-key rubberized back-lit keypad
Operating Temperature	0C to 60C
Humidity	10% to 90% non-condensing
Power Requirements	5VDC
Casing Dimensions	110x90x35 mm
Certification	

Reader Processing Unit (RPU)

Model	EL80/2 RPU
Manufacturer	ELID Sdn Bhd
Country of Origin	Malaysia
Microprocessor	Intel 88C 186 16-bit Microprocessor
Max. controller supported	64
Memory OS	256K EPROM
Memory Data Storage	256K Flash ROM
RS232 Communication Buses	2 buses
Multidrop/RS485 buses	4 buses
Onboard I/O	16 inputs/8 outputs
Real-time scanning	YES
Power Supply	12VDC with 3 Amp charger
Max Transactions	5,000 transactions
Max Cardholders	20,000 cards
Dimensions	700(H)x400(H)x120(D)
Built-in Tamper Detection	YES
Operating Temperature	0C to 60C
Humidity	10% to 90% non-condensing
Casing Dimensions	410(H)x400(L)x120(W)
Certification	

Data Gathering Panel (DGP)

Model	ES550/2 DGP
Manufacturer	ELID Sdn Bhd
Country of Origin	Malaysia
Microprocessor	Intel 88C 186 16-bit Microprocessor
Max. field devices supported	Up to 64 field devices (EFD)
Memor OS	256K EPROM
Memory Data Storage	256k Flash ROM
RS232 Communication buses	2 buses
Multi-drop/RS485 buses	4 buses
On-board I/O	16 inputs/16 outputs
Real-time scanning	YES
Power supply	12VDC
Transactions	5,000 transactions
Dimension	700(H)x400(H)x120(D)
Built-in Tamper Detection	YES
Modem Support	NO
Input Grouping	128 groups, 32 points
Output Grouping	128 groups, 32 points
Operating Temperature	0C to 50C
Humidity	10%-90% non-condensing
Casing Dimensions	410(H)x400(L)x120(W)
Certification	

Integrated Security Software

Model	EsofNET
Manufacturer	ELID Sdn Bhd
Country of Origin	Malaysia
Operating System	Windows NT 4.0
Database System	SQL Client Server DB (32-bit) System
Max. controllers	1,024
Max. field devices	1,024
Max. inputs	16,384
Max. outputs	8,192
Max Cardholders	100,000
Max Workstations	32 workstations
Operator Activity Logging	YES
Area Trace	YES
Anti-passback	Global Anti-passback
Export database/report	ASCII, DBF, DB
Context on-line help	YES
Door access monitoring	YES
Alarm monitoring	YES
Lift access monitoring	YES
Car park access monitoring	YES
Visitor management	YES (optional)
Guard tour monitoring	YES (optional)
Time management	YES (optional)
CCTV monitoring	YES (optional)
Photo ID support	YES (optional)
Messaging	YES (optional)
Export Database/Report	ASCII, DBF, DB
Compliance	ODBC, DBF Compliant
Connections	TCP/IP LAN/WAN
Architecture	3-tier multiple failure redundancy
System Monitoring	Real-time
Certification	

Terminal Server

Model	EL77A/B Terminal Server
Manufacturer	ELID Sdn Bhd
Country of Origin	Malaysia
Microprocessor	32-bit 386EX running at 25 Mhz
Memory	4 MB RAM
Standalone Operation	NO
Real-time Scanning	YES
Tamper Detection	YES
Display	2x20 alphanumeric
Connectivity	TCP/IP, RS485 Multi-drop
No of RS232 BUS	4
No of Multi-drop ports	4
Max. Controllers/EFD supported	64
Operating Temperature	10C to 60C
Humidity	10% to 90% non-condensing
Power Requirements	12VDC with 3 Amp charger
Casing Dimensions	410(H)x400(L)x120(W)
Certification	

Intelligent Field Device (EFD)

Model	EFD1608
Manufacturer	ELID Sdn Bhd
Country of Origin	Malaysia
Microprocessor	8-bit Motorola HCMOS MPU
Supervised Inputs	3 states Normal, Open, Short
Relay Outputs	8 relay outputs onboard, 24 off-board
Power Supply	12VDC
Dimension	350(H)x240(H)x80(D)
Built-in tamper detection	YES
Operating Temperature	0C to 50C
Humidity	10% to 90% non-condensing
Casing Dimensions	410(H)x400(L)x120(W)
Certification	

Power Supply Unit

Model	EP33
Manufacturer	ELID Sdn Bhd
Country of Origin	Malaysia
Housing material	Mild steel
Output voltage/current	12VDC/3.0A
Adjustable output range	+20% to -30%
Input	240VAC/50Hz
Dimension	85(H)x250(H)x150(D)
Certification	

Emergency Break Glass

Model	ED15
Housing material	ABS Engineering plastic
Cable Entry	20mm conduit entries
Finishing	Blue
IP rating	IP 54 with weather resistant gasket
Rating	12VDC-15A

Acid Sealed Lead Battery

Nominal Voltage	12VDC
Capacity Rating	6.5 Ah (20 hour rate)
Discharge current rate	325Ma (20 hour rate)
Operating temperature	0C to 40C
Weight	2.4 kg
Termination	Space lig.
Controller backup	Up to 8 hours

Magnetic Contact

Housing material	Alcino 5 or ceramic ferrite
Dimension	Approx. 50x10x10 mm
Switching voltage	30VDC/0.3 Amps
Max. Power	3 watts
Protection	IP 68
Ambient temperature	40C-60C
Expected maximum usage	10 million times

Electromagnetic Lock Device

Model	TR-0021-001
Magnet Size	268x48x25
Armature	185x38x16
Current	500Ma
Holding Force	Minimum 600 lbs
Residual Magnetism	None
Housing	Satin anodized aluminium housing

Override Switch

Position	Maintained 2 position with SPDT
Circuit Operation	Closed or Open
Lock	Tubular Switch Lock
Current	10 AMP at 12VDC
Size	Diameter 22mm Length 47mm
Finish	Bright Chrome

PC Server Unit

Country of Origin	Taiwan
Processor	Intel Pentium Celeron 500 Mhz
RAM	128MB 100Mhz SDRAM with ECC
Hard Disk	9GB Ultra-wide SCSI Hard Disk
PCI Ethernet Card	Intel Pro 100+ NIC
Controller	Integrated Ultra 2/LVD SCSI
Cache	512KB Internak L2
Operating System	Microsoft Windows NT
Database Engine	Microsoft SQL Server
Monitor	18" digital color monitor
Certification	

PC Workstation Unit

Processor	Intel Pentium III 450 Mhz
RAM	32MB SDRAM
Hard Disk	6.4 GB Smart II Ultra ATA HDD
Cache	512KB L2 Cache
Operating System	Microsoft Windows NT/98
Monitor	17" digital color monitor
Certification	

ELID TECHNOLOGY
INTERNATIONAL PTE LTD



TECHNICAL DATA SPECIFICATIONS - MATRIX V

- Controller
- Reader Interface Unit
- Electronic Field Device
- Input/Output Module
- Card Reader
- Contactless Smart Card Reader
- Keypad Display
- Integrated Security Software
- Power Supply Unit
- Emergency Breakglass
- Acid Sealed Lead Battery
- Magnetic Contact
- Electromagnetic Lock Device
- Override Switch
- PC Server Unit
- PC Workstation Unit

Controller

Model	EL5000
Manufacturer	ELID Sdn Bhd
Country of Origin	Malaysia
Microprocessor	32-bit 386EX running at 25 Mhz
Card Users	100,000 Local
Transactions	23,000 Local
Memory	4 MB RAM
Modes of Operation	Card & Card+PIN
Standalone Operation	YES
Real-time Scanning	YES
Tamper Detection	YES
Display	2x20 alphanumeric
Connectivity	TCP/IP, RS485 Multi-drop
No of RS485 BUS	2
Onboard I/O	2 Input Points/1 Output Point
Max. RIU supported	4 units of ER505 Reader Interface Unit
Max. EFD supported	8 units of EFD80 Electronic Field Device
Max I/O Modules	8 units of EA5168 I/O Module
Operating Temperature	0C to 60C
Humidity	10% to 90% non-condensing
Power Requirements	12VDC with 3 Amp charger
Casing Dimensions	410(H)x400(L)x120(W)
Certification	

Reader Interface Unit

Model	ER505
Manufacturer	ELID Sdn Bhd
Country of Origin	Malaysia
Microprocessor	8-bit CPU (68HC11) with 128k ROM and 8k RAM
Communication	4 wires RS485 Interface (+V, -V, Data+, Data-)
Protocol	Peer-to-peer collision detection protocol (E-BUS)
Max doors supported	2 Doors (each with one IN and one OUT reader)
Modes of Operation	Card & Card+PIN
Standalone Operation	No
Type of reader supported	Barcode, Magnetic, Proximity, Smart Cards, Biometrics, Touch Memory
Max. readers supported	4 (2 IN and 2 Out Readers)
Inputs/Outputs	2 Inputs, 3 Outputs
Operating Temperature	0C to 60C
Humidity	10% to 90% non-condensing
Power Requirements	12VDC 100mA excluding reader
Casing Dimensions	410(H)x400(L)x120(W)
Certification	

Electronic Field Device

Model	EFD80
Manufacturer	ELID Sdn Bhd
Country of Origin	Malaysia
Microprocessor	Motorola 68 HC908 GP32 PLL at 4.9 Mhz
Supervised Inputs	16 Input Points
Relay Outputs	32 Output Points
Power Supply	12VDC
Dimension	350(H)x240(H)x80(D)
Built-in tamper detection	YES
Operating Temperature	0C to 50C
Humidity	10% to 90% non-condensing
Casing Dimensions	410(H)x400(L)x120(W)
Certification	

Input/Output Module

Model	EA5168
Manufacturer	ELID Sdn Bhd
Country of Origin	Malaysia
Supervised Inputs	8 Input Points
Relay Outputs	8 Output Points
Power Supply	12VDC
Dimension	350(H)x240(H)x80(D)
Built-in tamper detection	YES
Operating Temperature	0C to 50C
Humidity	10% to 90% non-condensing
Casing Dimensions	410(H)x400(L)x120(W)
Certification	

Card Reader

Model	ER0923-002
Manufacturer	HID
Country of Origin	United States
Reading Range	Up to 12.5cm (5")
Transmission Frequency	125 KHZ
Communication Output	Wiegand
Anticollision	NO
Audio Tone	Beeper
Indicator	Tri-Color (red, green, amber)
Operating Temperature	0C to 65C
Humidity	10% to 90% non-condensing*
Power Requirements	5VDC
Casing Dimensions	110x90x35 mm
Certification	CE

Contactless Smart Card Reader

Model	ER0680-S02
Manufacturer	ELID Sdn Bhd
Country of Origin	China
Reading Range	Up to 7.5cm (3")
Transmission Frequency	13.56 Mhz
Communication Output	Wiegand
Anticollision	YES
Audio Tone	NO
Indicator	NO
Operating Temperature	0C to 60C
Humidity	10% to 90% non-condensing
Power Requirements	5VDC
Casing Dimensions	110x90x35 mm
Certification	

Keypad Display

Model	EK9S
Manufacturer	ELID Sdn Bhd
Country of Origin	Malaysia
Display	4x7 segment LED Display
Keypad	12-key rubberized back-lit keypad
Operating Temperature	0C to 60C
Humidity	10% to 90% non-condensing
Power Requirements	5VDC
Casing Dimensions	110x90x35 mm
Certification	

Integrated Security Software

Model	Matrix V
Manufacturer	ELID Sdn Bhd
Country of Origin	Malaysia
Operating System	Windows 2000 Server
Database System	Microsoft SQL Server
Max. controllers	1,000
Max. field devices	8,000
Max. inputs	256,000 Input Points
Max. outputs	384,000 Output Points
Max Cardholders	Unlimited
Max Workstations	32 workstations
Operator Activity Logging	YES
Area Trace	YES
Anti-passback	Global Anti-passback
Export database/report	ASCII, DBF, DB
Door access monitoring	YES
Alarm monitoring	YES
Lift access monitoring	YES
Car park access monitoring	YES
Visitor management	YES (optional)
Guard tour monitoring	YES (optional)
Time management	YES (optional)
CCTV monitoring	YES (optional)
Photo ID support	YES (optional)
Messaging	YES (optional)
Export Database/Report	ASCII, DBF, DB
Compliance	ODBC Compliant
Connections	TCP/IP LAN/WAN
Architecture	3-tier multiple failure redundancy
System Monitoring	Real-time
Certification	

Power Supply Unit

Model	EP33
Manufacturer	ELID Sdn Bhd
Country of Origin	Malaysia
Housing material	Mild steel
Output voltage/current	12VDC/3.0A
Adjustable output range	+20% to -30%
Input	240VAC/50Hz
Dimension	85(H)x250(H)x150(D)
Certification	

Emergency Breakglass

Model	ED15
Housing material	ABS Engineering plastic
Cable Entry	20mm conduit entries
Finishing	Blue
IP rating	IP 54 with weather resistant gasket
Rating	12VDC-15A

Acid Sealed Lead Battery

Nominal Voltage	12VDC
Capacity Rating	6.5 Ah (20 hour rate)
Discharge current rate	325Ma (20 hour rate)
Operating temperature	0C to 40C
Weight	2.4 kg
Termination	Space lig.
Controller backup	Up to 8 hours

Magnetic Contact

Housing material	Alcino 5 or ceramic ferrite
Dimension	Approx. 50x10x10 mm
Switching voltage	30VDC/0.3 Amps
Max. Power	3 watts
Protection	IP 68
Ambient temperature	40C-60C
Expected maximum usage	10 million times

Electromagnetic Lock Device

Model	TR-0021-001
Magnet Size	268x48x25
Armature	185x38x16
Current	500Ma
Holding Force	Minimum 600 lbs
Residual Magnetism	None
Housing	Satin anodized aluminium housing

Override Switch

Position	Maintained 2 position with SPDT
Circuit Operation	Closed or Open
Lock	Tubular Switch Lock
Current	10 AMP at 12VDC
Size	Diameter 22mm Length 47mm
Finish	Bright Chrome

PC Server Unit

Processor	Intel Pentium III 1 Gigaherz
RAM	256MB 133Mhz SDRAM with ECC
Hard Disk	20GB Ultra-wide SCSI Hard Disk
PCI Ethernet Card	Intel Pro 100+ NIC
Controller	Integrated Ultra 2/LVD SCSI
Cache	512KB Internak L2
Operating System	Microsoft Windows 2000 Server
Database Engine	Microsoft SQL Server 7.0/2000
Monitor	17" digital color monitor
Certification	

PC Workstation Unit

Processor	Intel Pentium III 733 Mhz
RAM	128MB SDRAM
Hard Disk	20 GB HDD
PCI Ethernet Card	Intel Pro 100+ NIC
Cache	512KB L2 Cache
Operating System	Microsoft Windows 2000 Professional
Monitor	17" digital color monitor
Certification	

ELID TECHNOLOGY
INTERNATIONAL PTE LTD

INSTALLATION & SYSTEM CONFIGURATION MASTER LIST

CCTV System Configuration with EsofNET & Matrix V ISMS

Part 1 - EsofNET CCTV Module Specifications

CCTV Module Objectives:

- To provide CCTV Monitoring through LAN
- To provide remote control of CCTV Switcher through the LAN
- Display video of the selected camera
- Provide same functionality as a hardware switcher control keypad such as camera switching, pan, tilt, zoom and etc.

System Requirements:

- Intel Pentium III 550E
- 128 MB RAM
- EsofNET System Configuration in TCP/IP Local/Wide Area Network
- Video Capture Card (DirectX Compatible)
- Windows 98, NT, 2000 with Internet Explorer 5

Features:

- Support for up to 512 Cameras
- Remote Control any type of switcher through PC COM Port
- Support up to 128 User Defined Extended Control Buttons for controls other than Pan, Tilt, Zoom and Switch
- Switched automatically when trigger by an alarm event (Input or Reader)
- Ability to trigger output or reader control by a ACK events
- Support more than one Camera Sequence definition, support different Camera order
- Support EsofNET Device Groups
- Support EsofNET User-defined device for Program Launching and Camera Switching
- EsofNET like On-line Transaction screen to Show Alarm and ACK events
- Daily Alarm Events Reports
- Audit Trail Report on user activities
- Support User Access Rights on setup and reporting area
- Support Video streaming through Video Server using IE Browser control
- Support remote control through LAN using Telnet, ELID Socket, HTTP/CGI command
- Define specific Door Transaction to trigger a camera switch
- Support 'SKIN' GUI configuration

Part 2 - CCTV Hardware Configurations

CCTV Workstation Configuration for EsofNet/Matrix V

- Multiple cameras set at various locations are connected to a camera switcher/multiplexer.
- The switcher/multiplexer is connected via an RS232 line to a PC installed with EsofNET/Matrix V with the CCTV Module software (CCTV Workstation), which manages the connected cameras.
- The CCTV Workstation is connected to the Local Area Network via an Intranet Hub, where it is able to receive CCTV data requests and direct CCTV data streams to other EsofNET/Matrix V Workstations.

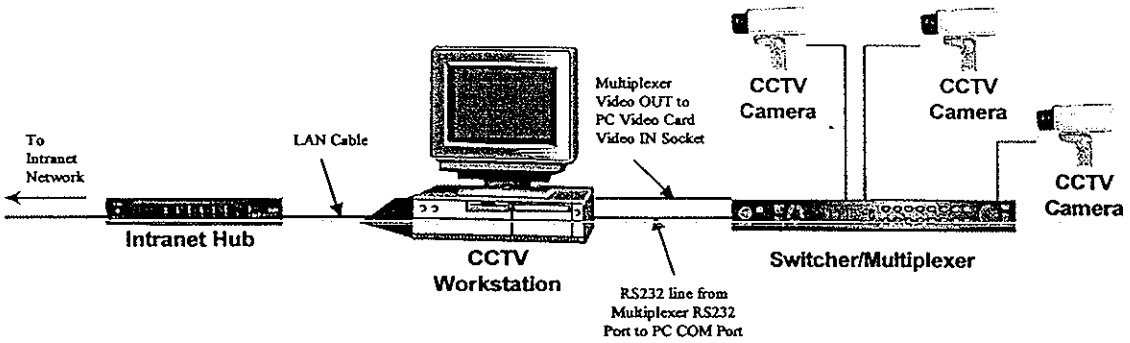

Multiple CCTV Workstations can be set up this way in different parts of the EsofNET/Matrix V network.

CCTV Video Server Configuration

- Multiple cameras set at various locations are connected to a camera switcher/multiplexer.
- Multiple Multiplexers are connected to a CCTV TCP/IP Network Video Server.
- The Video Server is connected to the rest of the network via an Intranet Hub and is able to receive commands and direct specific video feeds to various EsofNET/Matrix V Workstations installed with the CCTV Module.
- Hardware-based video servers supported: Axis Model 2400/2401.

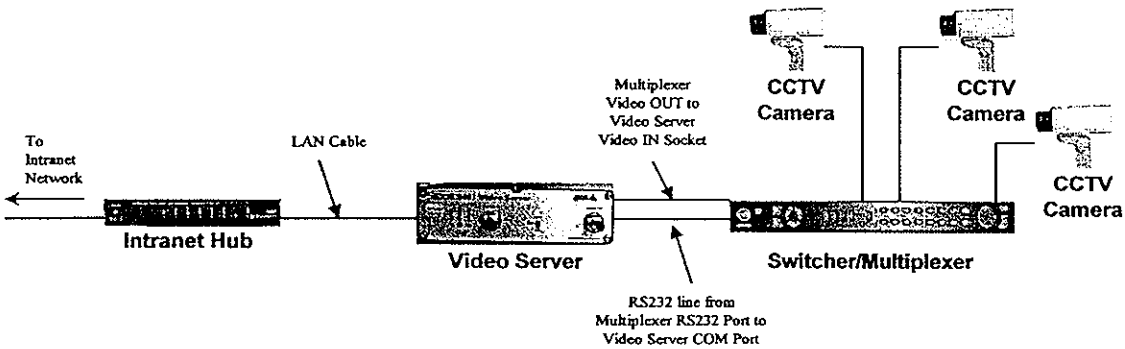

Matrix V Hard-wired CCTV Multiplexer Configuration

- Multiple cameras set at various locations are connected to a camera switcher/multiplexer.
- The switcher/multiplexer is hard-wired to a Matrix V Controller device (eg. EFD80, EA5168, ER505 /w EA8) from the Multiplexer's Input Point to the device's Output Point.
- The Controller Device is linked to the rest of the Matrix V Network via the Controller.
- Matrix V Workstations control the CCTV Switcher/Multiplexer through Reaction Table settings (eg. an Input Event at the EFD80 will trigger and Output Reaction at the EFD80 that will send a control signal to the CCTV Switcher/Multiplexer).
- Note: CCTV video feeds are NOT sent to the CCTV Module - Matrix V is only enabled to send a control signal to the multiplexer to switch the current video feed being sent to a particular monitor.

Configuration #1 - EFD80

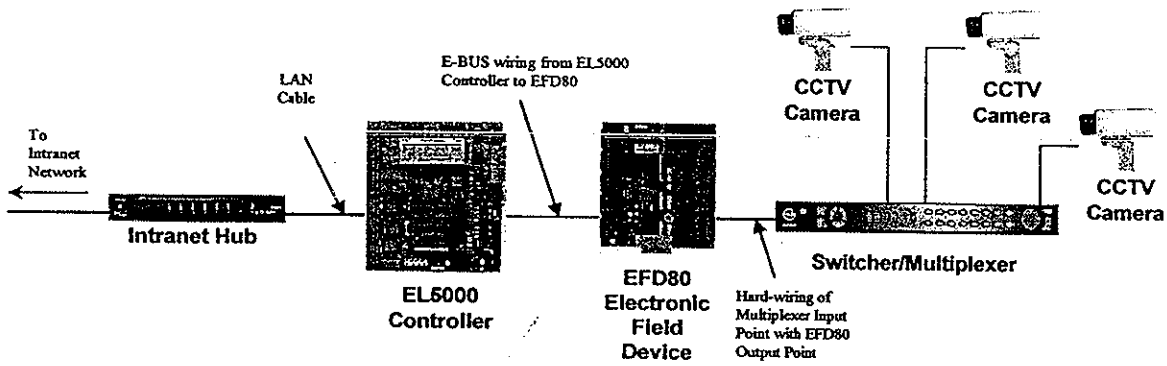

Configuration #2 - EA5168

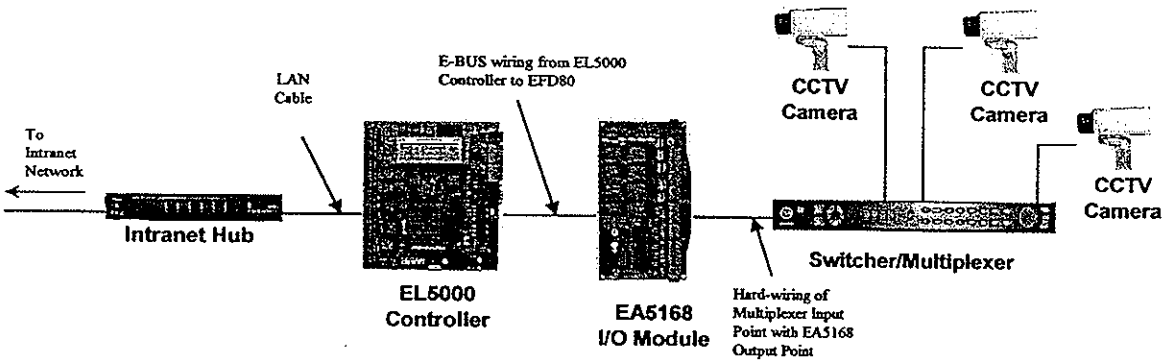

Configuration #3 - ER505 /w EA8

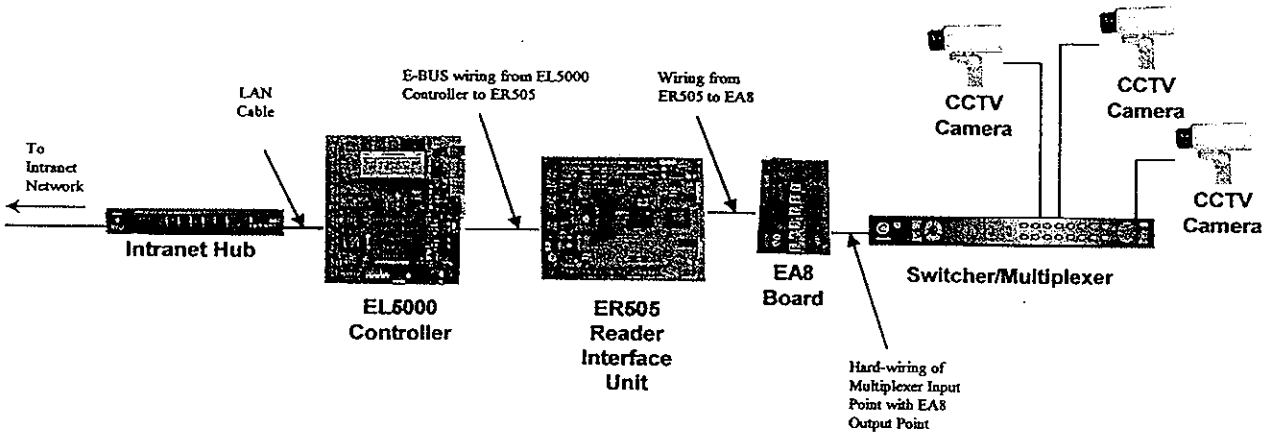

EsofNET Hard-wired CCTV Multiplexer Configuration

EsofNet only has one hard-wired configuration:

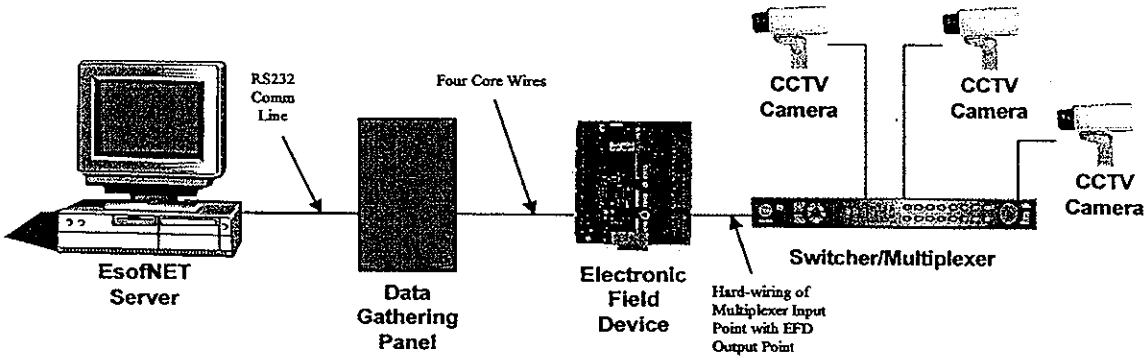

- Multiple cameras set at various locations are connected to a camera switcher/multiplexer.
- The switcher/multiplexer is hard-wired to an EsofNET Electronic Field Device from the Multiplexer's Input Point to the EFD's Output Point.
- The EFD is linked to a Data Gathering Panel and from there to the EsofNET Server.
- EsofNET Workstations control the CCTV Switcher/Multiplexer through Reaction Table settings (eg. an Input Event at the EFD will trigger and Output Reaction at the EFD that will send a control signal to the CCTV Switcher/Multiplexer).
- Note: CCTV video feeds are NOT sent to the CCTV Module - EsofNET is only enabled to send a control signal to the multiplexer to switch the current video feed being sent to a particular monitor.

Matrix V hardware that a CCTV Switcher/Multiplexer can be hard-wired to:

- ER505 Reader Interface Unit /w EA8 Expansion Board
- EFD80 Electronic Field Device
- EA5168 I/O Module

Any Matrix V Workstation installed with the CCTV Module can accept CCTV feeds from any CCTV Workstation, Matrix V Configured Video Servers. Up to 512 CCTV Cameras can be concurrently controlled and monitored via Matrix V.

Matrix V can also control the switching of Multiplexers hard-wired to an output point of a Matrix V controlled field device. A basic application of this can be the automatic switching of a camera to the camera currently covering a particular door should Matrix V sensors receive an alarm event on that door.

DUPLICATION
CONTROLLED COPY
SALES DEPARTMENT

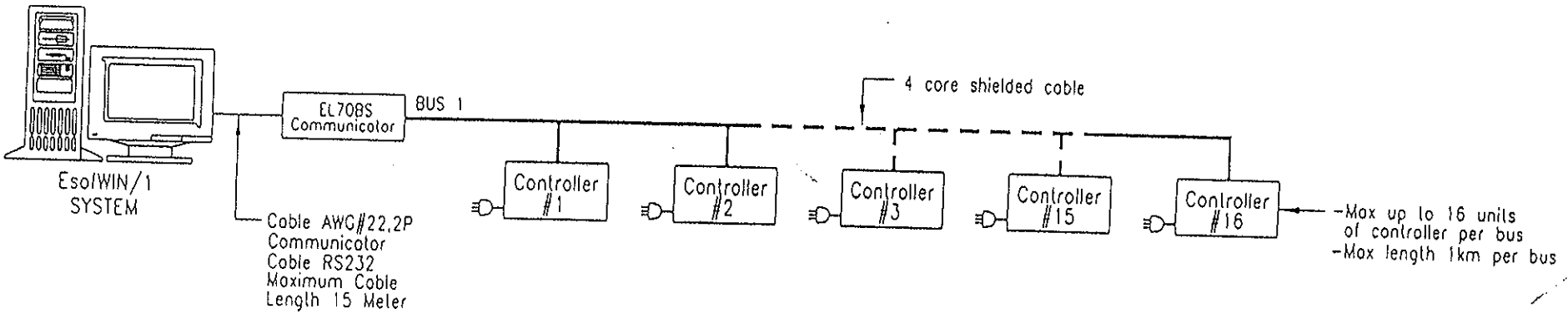

SINGLE LINE DIAGRAM FOR EsolWIN/1 SYSTEM

Applicoble Controller:

- EL1300 Door Access System
- EL220X Door Access System
- FC1205 Car Park Access System
- EL2205L Lift Access System

ELID SALES & MARKETING
SDN. BHD. (Co. No: 303511-T)
38, Jolan SS 25/28, Taman Mayang,
47301 Petaling Jaya, Selangor Darul Ehsan.
Tel : 03-7048818 (Main Line) Fax : 03-7051506

Title: SINGLE LINE DIAGRAM FOR EsolWIN/1 SYSTEM

Scale: NOT TO SCALE

Drawing Number: SL/STD./EsolWIN/1 CONFIGURATION/001

Drawn By: LIN WEI WEI

Checked By: R&D DEPT.

Approved By: HENRY WONG

Date: 20 JULY 2001

Revised No.: 0

File name: standard/EsolWIN 1

Remarks:

CONTROLLED COPY

DUPLICATION
CONTROLLED COPY
DEPT : SALES DEPARTMENT

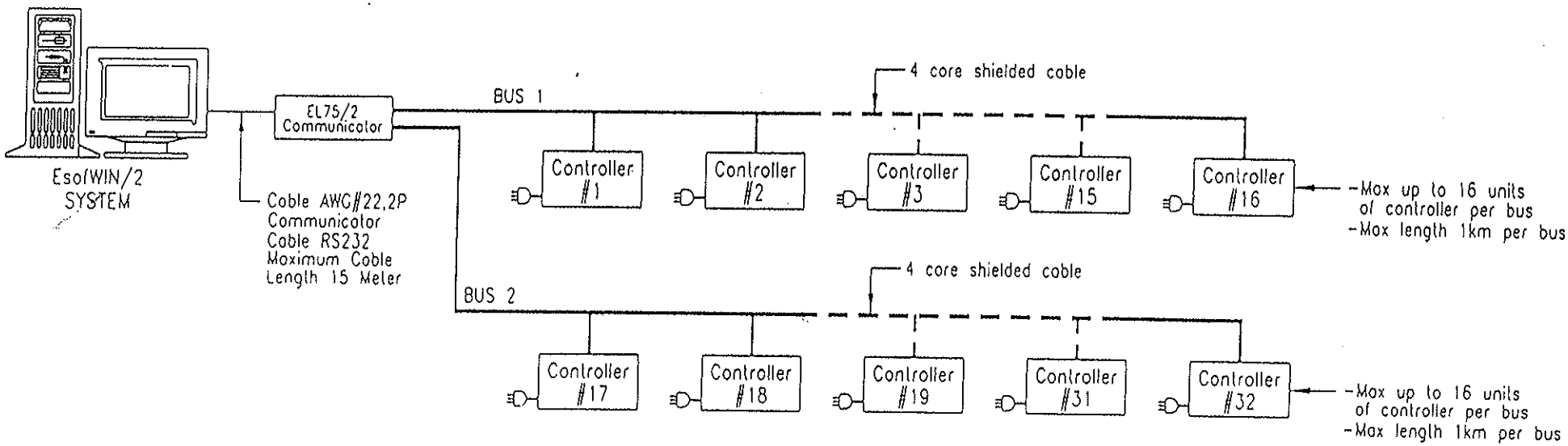

SINGLE LINE DIAGRAM FOR EsolWIN/2 SYSTEM

Applicable Controller:

- EL1300 Door Access System
- EL220X Door Access System
- FC1205 Car Park Access System
- EL2205L Lift Access System

ELID SALES & MARKETING
SDN. BHD. (Co. No: 303511-T)
38, Jalan SS 25/28, Taman Mayang,
47301 Petaling Jaya, Selangor Darul Ehsan.
Tel : 03-7048818 (Main Line) Fax : 03-7051506

Title: SINGLE LINE DIAGRAM FOR EsolWIN/2 SYSTEM	Checked By: R&D DEPT.
	Approved By: HENRY WONG
Scale: NOT TO SCALE	Date: 20 JULY 2001
Drawing Number: SL/SID./EsolWIN/2 CONFIGURATION/001	Revised No.: 0
Drawn By: LIN MEI WEI	File name: standard/EsolWIN 2

CONTROLLED COPY

DUPLICATION
CONTROLLED COPY
DEPT
SALES & MARKETING DEPARTMENT

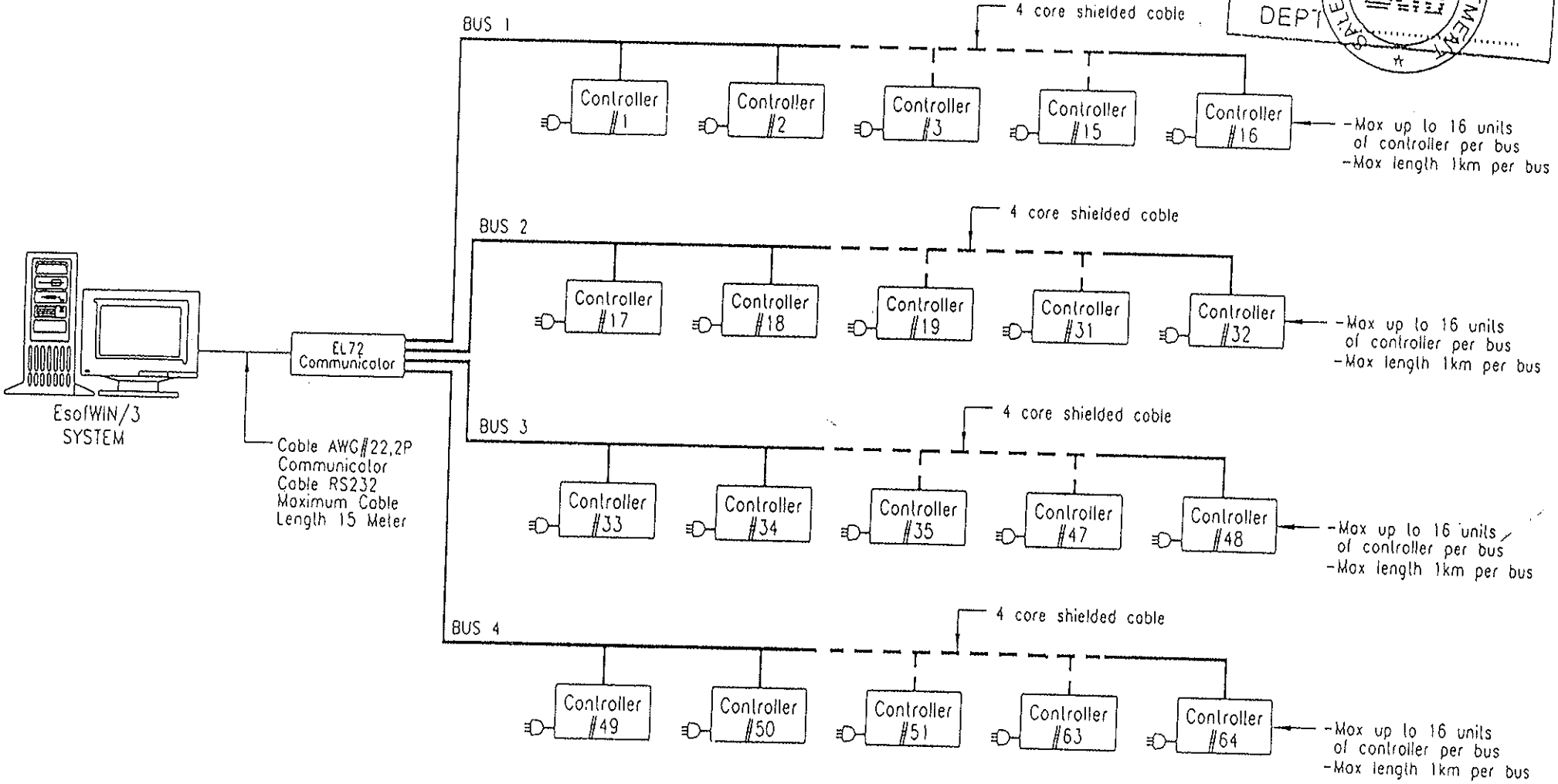

SINGLE LINE DIAGRAM FOR EsolWIN/3 SYSTEM

Applicable Controller:

- EL1300 Door Access System
- EL220X Door Access System
- FC1205 Car Park Access System
- EL2205L Lift Access System

ELID SALES & MARKETING SDN. BHD. (Co No: 300511-T)
38, Jalan SS 25/28, Taman Mayang,
47301 Petaling Jaya, Selangor Darul Ehsan.
Tel : 03-7048818 (Main Line) Fax : 03-7051506

Title: SINGLE LINE DIAGRAM FOR EsolWIN/3 SYSTEM	Checked By: R&D DEPT.
	Approved By: HENRY WONG
Scale: NOT TO SCALE	Date: 20 JULY 2001
Drawing Number: SL/STD./EsolWIN/3 CONFIGURATION/001	Revised No.: 0
Drawn By: LIM WEI WEI	File name: standard/EsolWIN 3

CONTROLLED COPY

DUPLICATION CONTROLLED COPY
DEPT : SALES SUPPORT DEPARTMENT

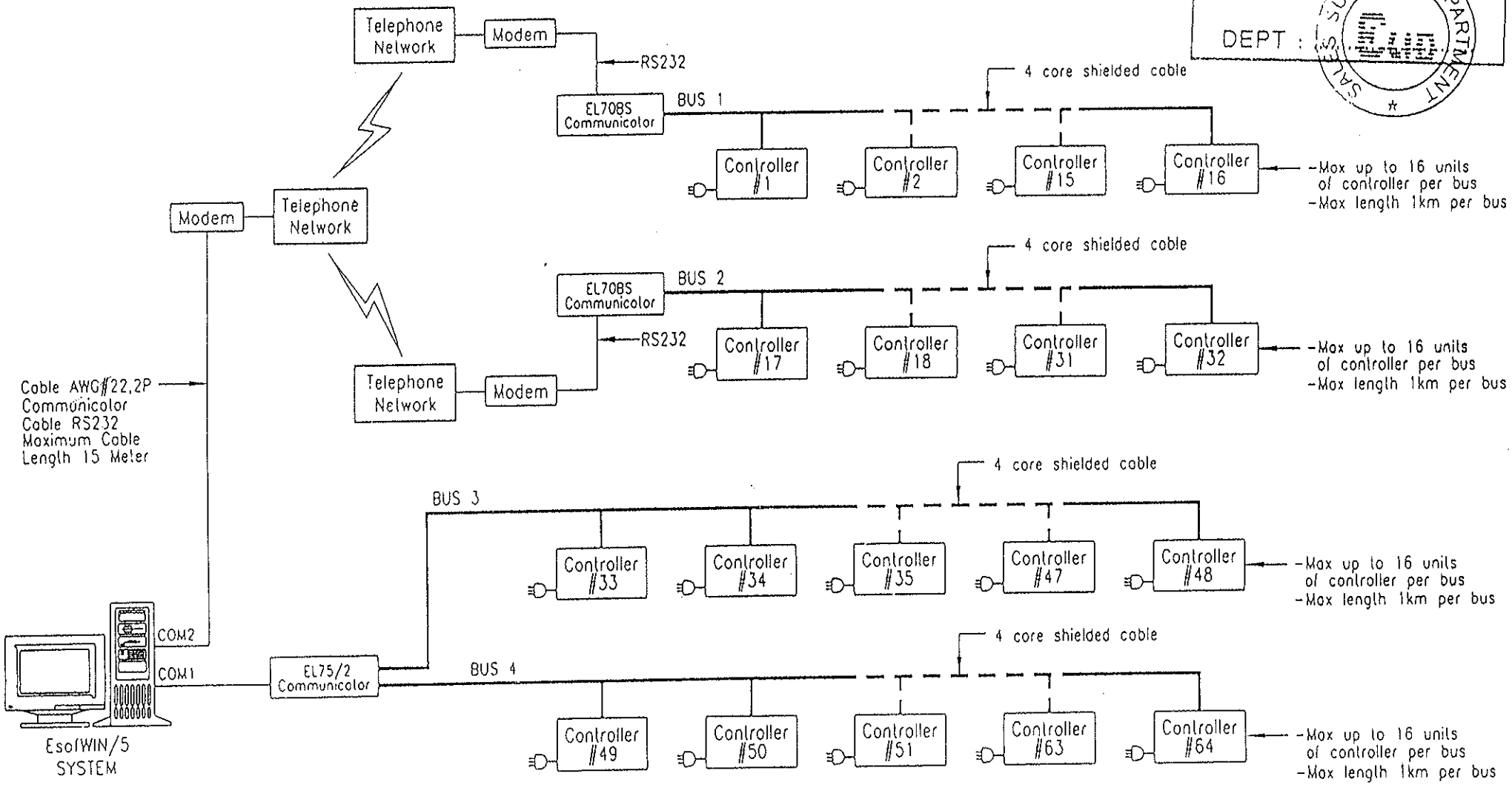

SINGLE LINE DIAGRAM FOR EsolWIN/5 SYSTEM

Applicable Controller:

- EL1300 Door Access System
- EL220X Door Access System
- FC1205 Car Park Access System
- EL2205L Lift Access System

ELID SALES & MARKETING SDN. BHD. (Co No: 303511-T)
38, Jalan SS 25/28, Taman Mayang,
47301 Petaling Jaya, Selangor Darul Ehsan.
Tel : 03-7048818 (Main Line) Fax : 03-7051506

Title: SINGLE LINE DIAGRAM FOR EsolWIN/5 SYSTEM	Checked By: R&D DEPT.
	Approved By: HENRY WONG
Scale: NOT TO SCALE	Date: 20 JULY 2001
Drawing Number: SL/STD./EsolWIN/5 CONFIGURATION/001	Revised No: 0
	File name: standard/EsolWIN 5

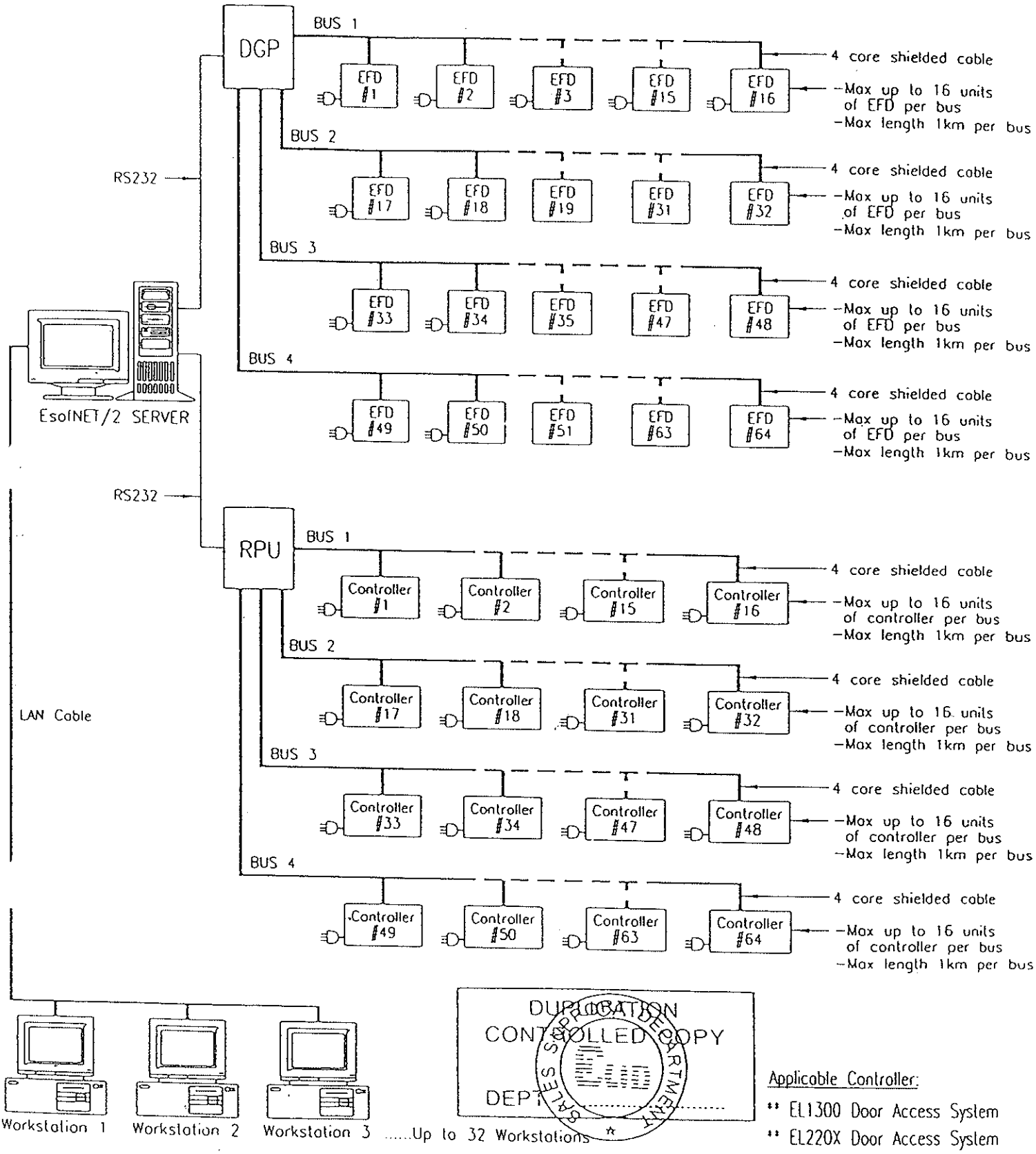

DUPLICATION
CONTROLLED COPY
DEPT .....
SALES SUPPORT DEPARTMENT

Applicable Controller:

- EL1300 Door Access System
- EL220X Door Access System
- FC1205 Car Park Access System
- EL2205L Lift Access System
- ET12XX Time Clock System

SINGLE LINE DIAGRAM FOR EsofNET/2 SYSTEM

ELID SALES & MARKETING SDN. BHD. (Co. No. 307511-T)
38, Jalan SS 25/28, Taman Mayang,
47301 Petaling Jaya, Selangor Darul Ehsan.
Tel : 03-7048818 (Main Line) Fax : 03-7051506

Title: SINGLE LINE DIAGRAM FOR EsofNET/2 SYSTEM	Checked By: R&D DEPT
	Approved By: HENRY WONG
Scale: NOT TO SCALE	Date: 20 JULY 2001
Drawing Number: SL/STD./EsofNET/2 CONFIGURATION/001	Revised No.: 0
Drawn By: LIM MEI WEI	File name: standard/EsofNET 2
	Remarks:

CONTROLLED COPY

DUPLICATION
CONTROLLED COPY
DEPT : .....
SALES DEPARTMENT

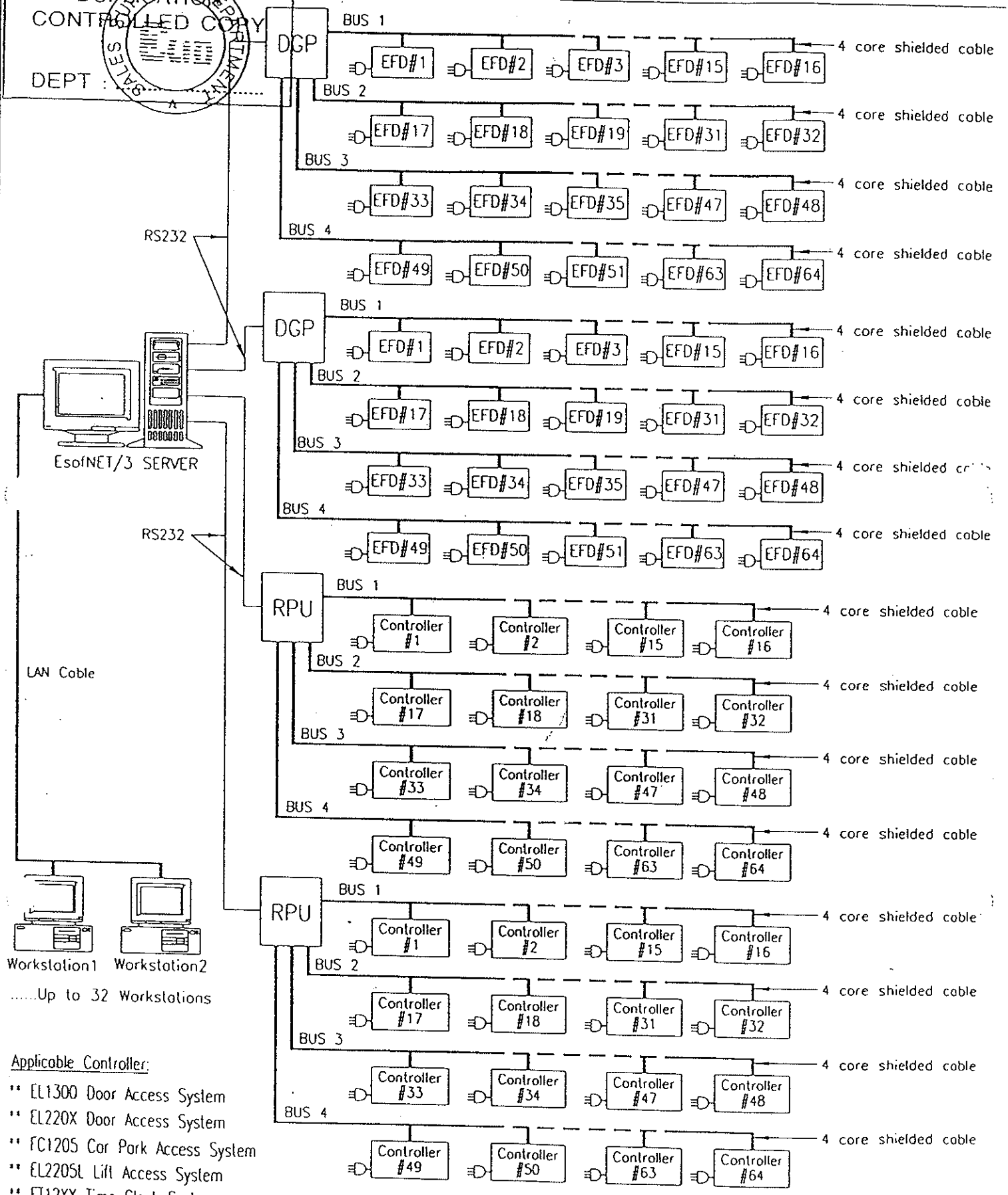

Applicable Controller:

** EL1300 Door Access System
** EL220X Door Access System
** FC1205 Car Park Access System
** EL2205L Lift Access System
** ET12XX Time Clock System

SINGLE LINE DIAGRAM FOR EsofNET/3 SYSTEM

ELID SALES & MARKETING
SDN. BHD. (Co. No: 303511-T)
38, Jalan SS 25/28, Taman Mayang,
47301 Petaling Jaya, Selangor Darul Ehsan.
Tel : 03-7048818 (Main Line) Fax : 03-7051506

Title: SINGLE LINE DIAGRAM FOR EsofNET/3 SYSTEM	Checked By: R&D DEPT.
	Approved By: HENRY WONG
Scale: NOT TO SCALE	Date: 20 JULY 2001
Drawing Number: SL/STD./EsofNET/3 CONFIGURATION/001	Revised No: 0
Drawn By: LIM MO WO	File name: standard/EsofNET 3
	Remarks: CONTROLLED COPY

DUPLICATION CONTROLLED COPY
DEPT : ELID
SALES SUPPORT DEPARTMENT

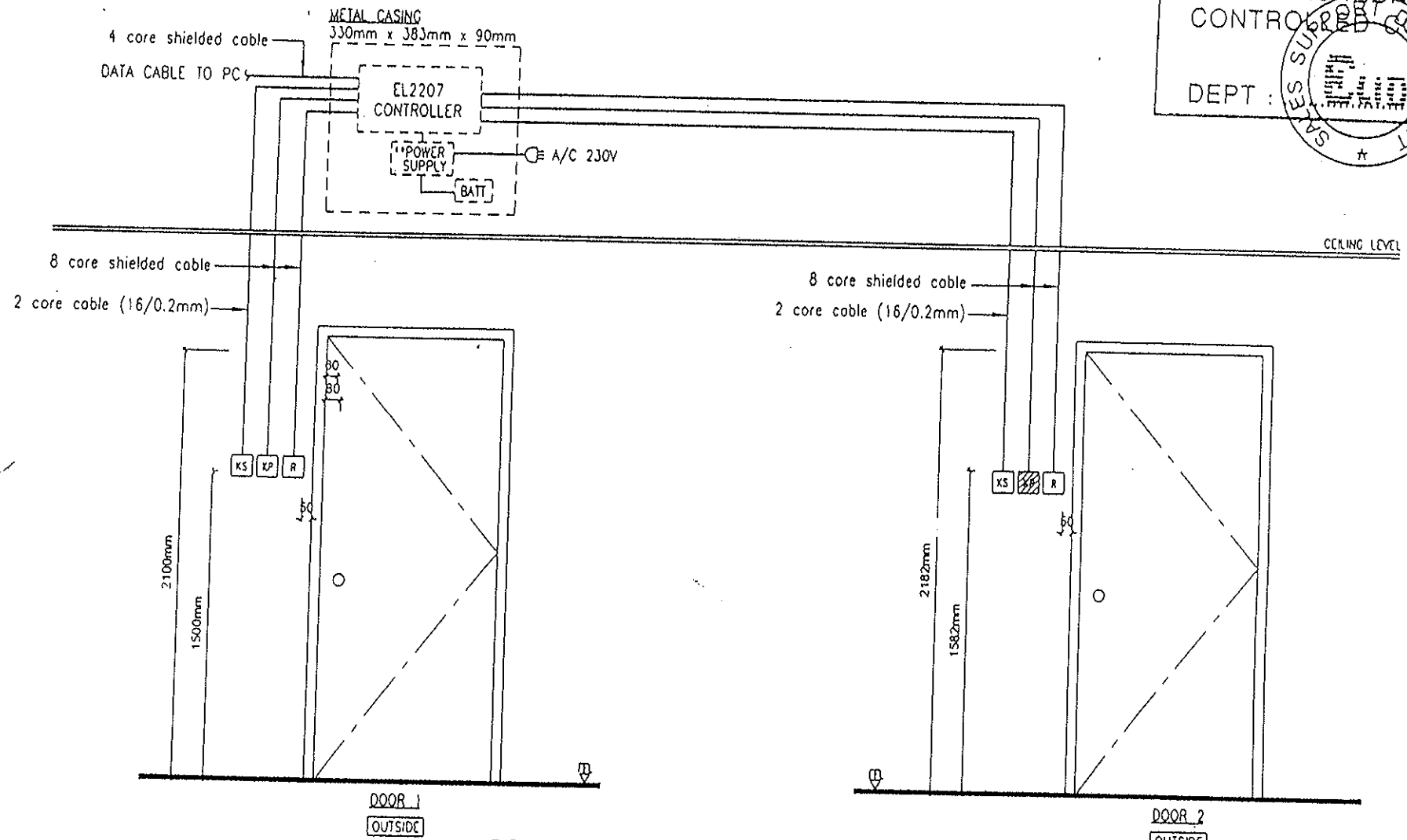

TYPICAL EL2207 TWO DOORS INSTALLATION LAYOUT- OUTSIDE VIEW

NOTE: 1) Maximum length from EL2207 Controller to each door is 25 meter.
2) ▨ Oulside reader without LCD/LED display only apply to:
--EK3
--EK6

Legend:

R	READER	PB	PUSH BUTTON
KP	KEYPAD	KS	KEY SWITCH
BG	BREAK GLASS	BATT	BACKUP BATTERY
''	SITE CONDITION APPLY		

ELID SALES & MARKETING
SDN. BHD. (Co. No: 302511-T)
J8, Jalan SS 25/28, Taman Mayang,
47301 Petaling Jaya, Selangor Darul Ehsan.
Tel : 03-7048818 (Main Line) Fax : 03-7051506

Title: TYPICAL EL2207 TWO DOORS INSTALLATION LAYOUT (OUTSIDE)	Checked By: ENGINEERING DEPT.
	Approved By: K.S.SIA
Scale: NOT TO SCALE	Date: 07 JULY 2001
Drawing Number: DL/STD./EL2207-OUTSIDE/001	Revised No.: 0
Drawn By: LIM WEI WEI	File name: standard/EL2207-outside
	Remarks: CONTROLLED COPY

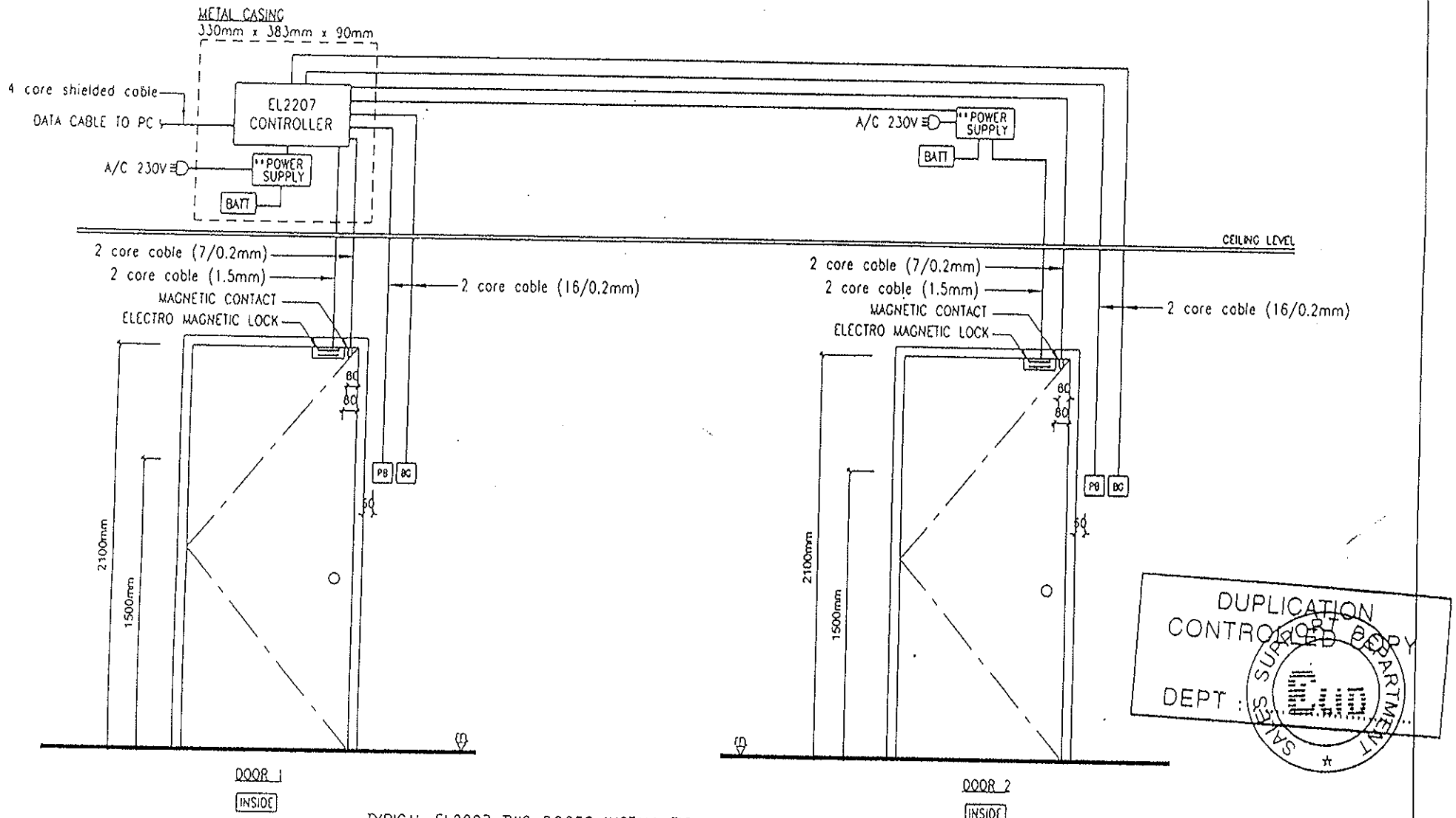

TYPICAL EL2207 TWO DOORS INSTALLATION LAYOUT- INSIDE VIEW

NOTE: Maximum length from EL2207 Controller to each door is 25 meter.

Legend:

R	READER	PB	PUSH BUTTON
KP	KEYPAD	KS	KEY SWITCH
BG	BREAK GLASS	BATT	BACKUP BATTERY
**	SITE CONDITION APPLY		

DUPLICATION CONTROLLED BY
DEPT : SALES SUPPORT DEPARTMENT

ELID SALES & MARKETING
SDN. BHD. (Co. No: 303511-T)
38, Jalan SS 25/28, Taman Mayang,
47301 Petaling Jaya, Selangor Darul Ehsan.
Tel : 03-7048818 (Main Line) Fax : 03-7051506

Title: TYPICAL EL2207 TWO DOORS INSTALLATION LAYOUT (INSIDE)	Checked By: ENGINEERING DEPT.
	Approved By: K.S.SIA
Scale: NO TO SCALE	Date: 07 JULY 2001
Drawing Number: DL/STD./EL2207-INSIDE/002	Revised No.: 0
Drawn By: LIM WEI WEI	File name: standard/EL2207-inside
	Remarks: CONTROLLED COPY

DUPLICATION
CONTROLLED COPY
SALES DEPARTMENT
DEPT

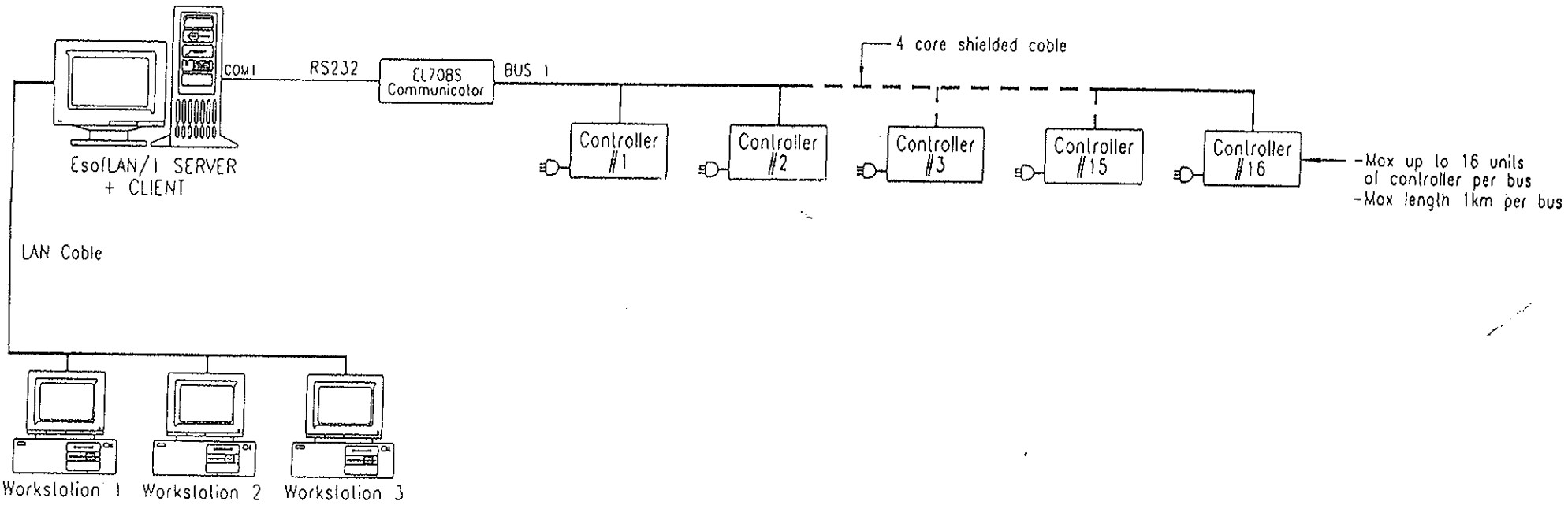

SINGLE LINE DIAGRAM FOR EsolLAN/1 SYSTEM

Applicable Controller:

- EL1300 Door Access System
- EL220X Door Access System
- FC1200/FC3000 Car Park System
- EL2205L Lift Access System

ELID SALES & MARKETING
SDN. BHD. (Co No: 303511-T)
38, Jalan SS 25/28, Taman Mayang,
47301 Petaling Jaya, Selangor Darul Ehsan.
Tel : 03-7048818 (Main Line) Fax.: 03-7051506

Title: SINGLE LINE DIAGRAM FOR EsolLAN/1 SYSTEM	Checked By: R&D
	Approved By: HENRY WONG
Scale: NOT TO SCALE	Date: 20 JULY 2001
Drawing Number: SL/STD/EsolLAN/1 CONFIGURATION/001	Revised No.: 0
Drawn By: LIM WEI WEI	File name: standard/EsolLAN 1

CONTROLLED COPY

DUPLICATION CONTROLLED COPY
DEPT : SALES & SUPPORT DEPARTMENT
ELID

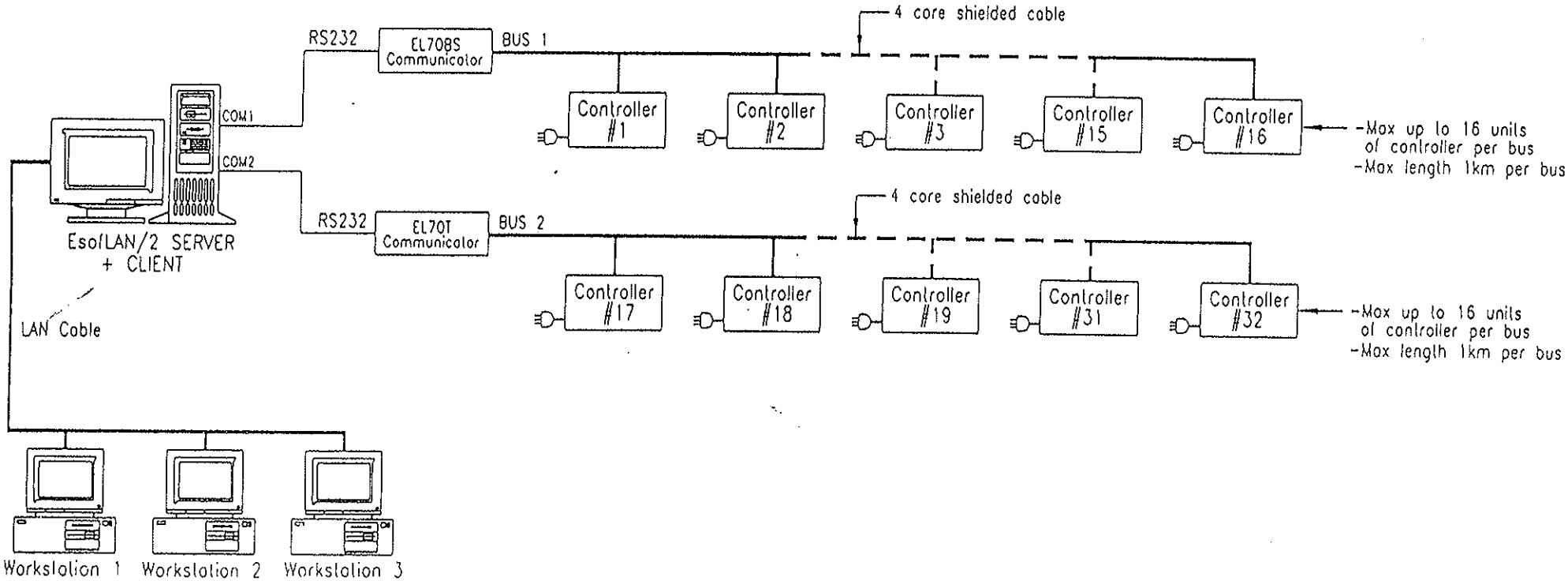

SINGLE LINE DIAGRAM FOR EsolLAN/2 SYSTEM

Applicable Controller:

- EL1300 Door Access System
- EL220X Door Access System
- FC1200/FC3000 Car Park System
- EL2205L Lift Access System

ELID SALES & MARKETING SDN. BHD. (Co No. 302511-T)
38, Jalan SS 25/28, Taman Mayang,
47301 Petaling Jaya, Selangor Darul Ehsan.
Tel : 03-7048818 (Main Line) Fax : 03-7051506

Title: SINGLE LINE DIAGRAM FOR EsolLAN/2 SYSTEM	Checked By: R&D DEPT.
	Approved By: HENRY WONG
Scale: NOT TO SCALE	Date: 20 JULY 2001
Drawing Number: SL/STD./EsolLAN/2 CONFIGURATION/001	Revised No.: 0
Drawn By: LIM WEI WEI	Filename: Standard/EsolLAN/2
	Remarks:

ELID SDN BHD HENRY WONG
CONTROLLED COPY

DUPLICATION CONTROLLED COPY
DEPT : ELID
SALES SUPPORT DEPARTMENT

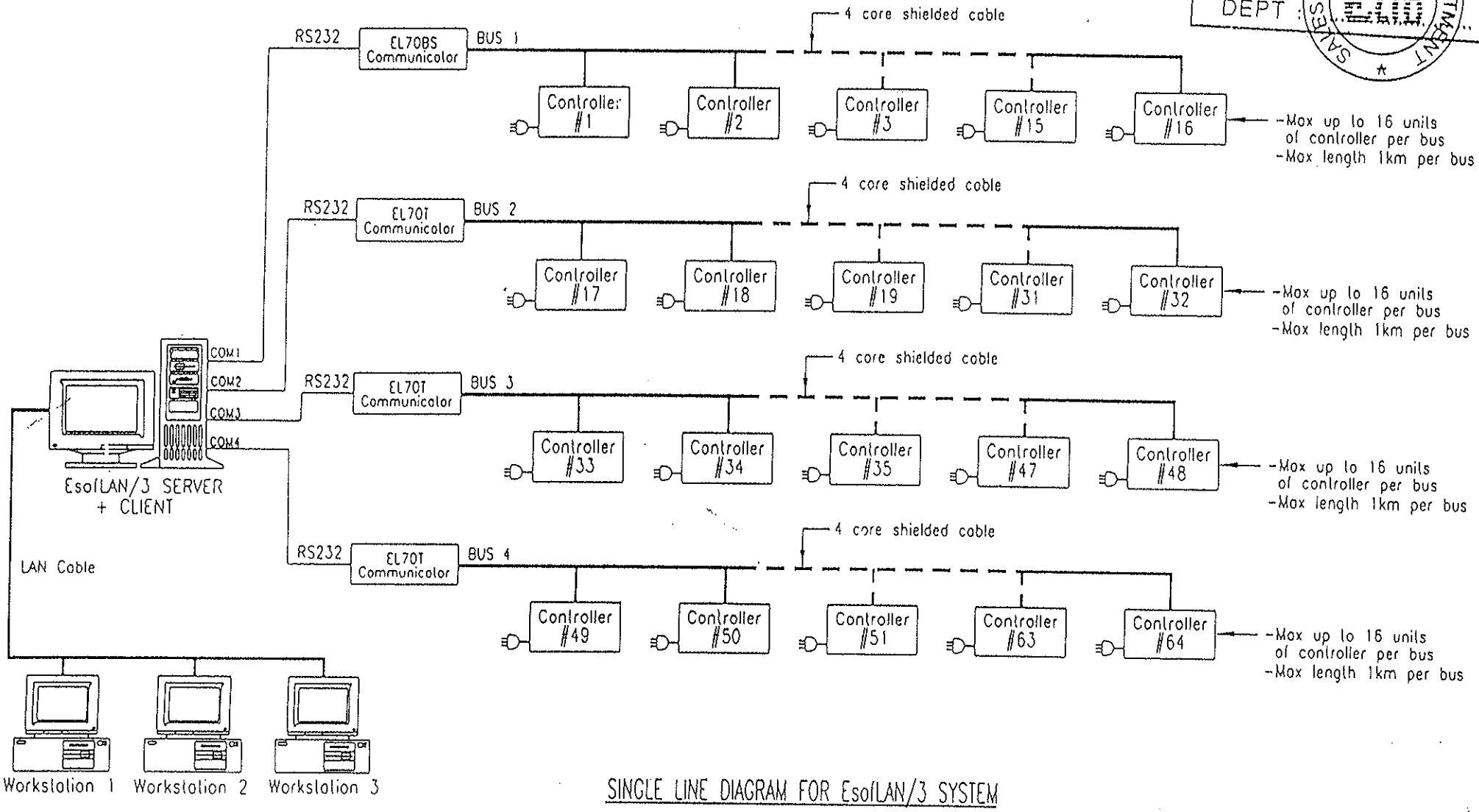

SINGLE LINE DIAGRAM FOR EsofLAN/3 SYSTEM

Applicable Controller:

- EL1300 Door Access System
- EL220X Door Access System
- FC1200/FC3000 Car Park System
- EL2205L Lift Access System

ELID SALES & MARKETING SDN. BHD. (Co. No: 303511-T)
38, Jalan SS 25/28, Taman Mayang,
47301 Petaling Jaya, Selangor Darul Ehsan.
Tel : 03-7048818 (Main Line) Fax : 03-7051506

Title: SINGLE LINE DIAGRAM FOR EsofLAN/3 SYSTEM	Checked By: R&D DEPT.
	Approved By: HENRY WONG
Scale: NOT TO SCALE	Date: 20 JULY 2001
Drawing Number: SL/STD./EsofLAN/3 CONFIGURATION/001	Revised No.: 0
Drawn By: LIM WEI WEI	File name: standard/EsofLAN 3

ELID SDN BHD HENRY WONG
CONTROLLED COPY

DUPLICATION CONTROL COPY
DEPT : SALES SUPPORT DEPARTMENT ELID

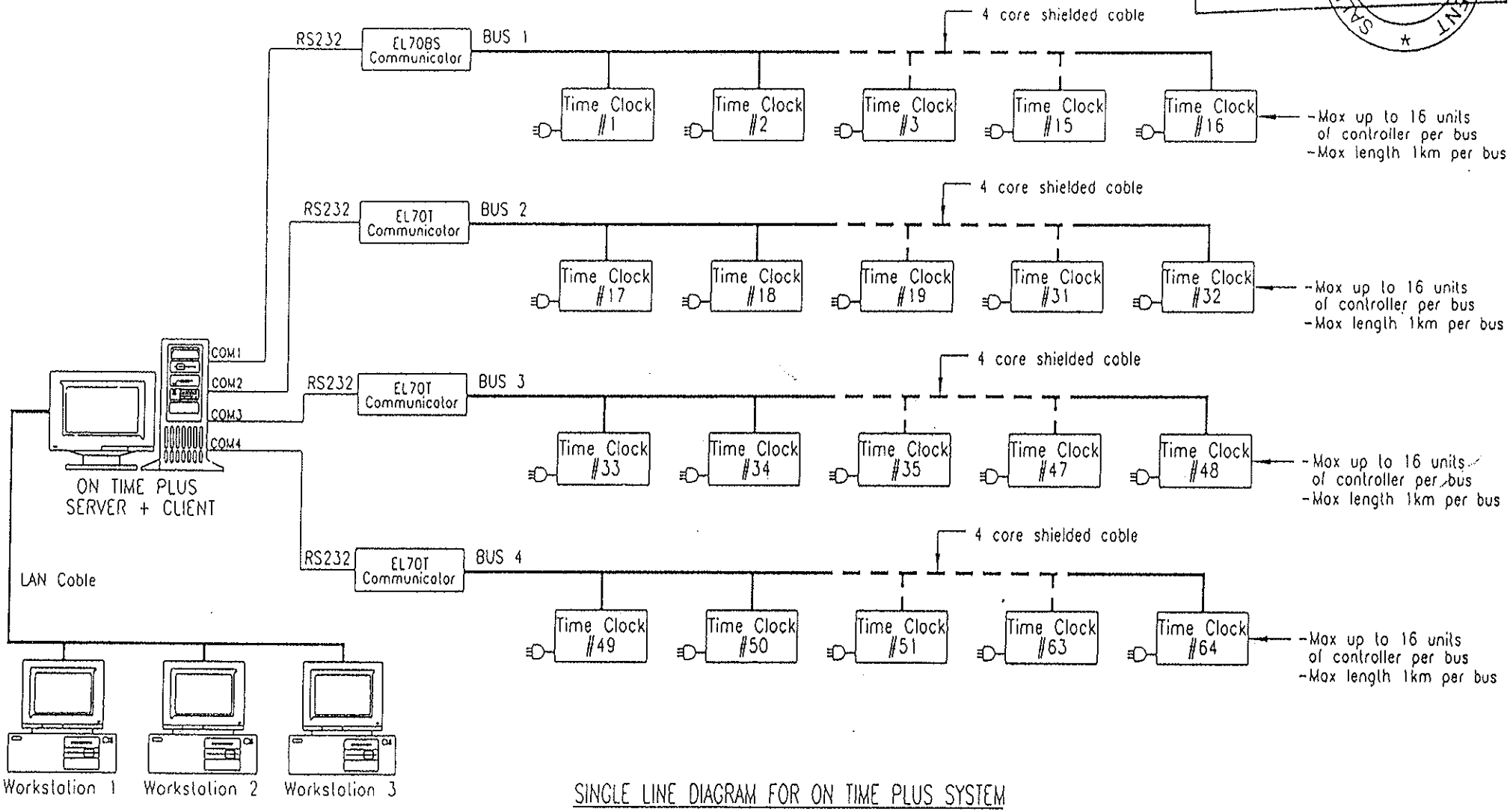

SINGLE LINE DIAGRAM FOR ON TIME PLUS SYSTEM

Applicable Time Clock:

** ET12XX Time Clock System

ELID SALES & MARKETING SDN. BHD. (Co No: 200511-T)
38, Jalan SS 25/28, Taman Mayang,
47301 Petaling Jaya, Selangor Darul Ehsan.
Tel : 03-7048818 (Main Line) Fax : 03-7051506

Title: SINGLE LINE DIAGRAM FOR ON TIME PLUS SYSTEM	Checked By: R&D DEPT.
	Approved By: HENRY WONG
Scale: NOT TO SCALE	Date: 20 JULY 2001
Drawing Number: SL/STD./ON TIME PLUS CONFIGURATION/001	Revised No.: 0
Drawn By: LIM WEI WEI	File name: standard/On Time Plus
	Page No.:

CONTROLLED COPY

DOCUMENT CONTROL COPY
DEPT : .....

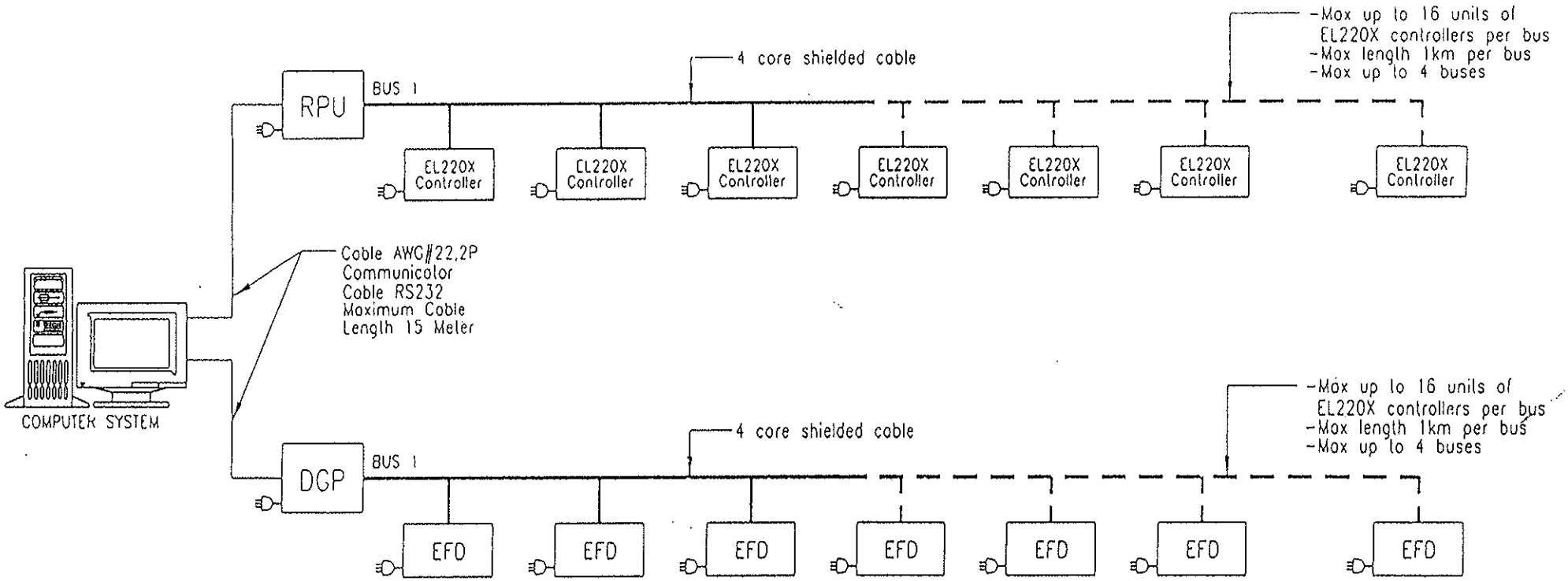

SINGLE LINE DIAGRAM FOR RPU AND DGP CONFIGURATION

Legend:

EFD	Intelligent Field Device	EL220X Controller	Door Access System
DGP	Data Gathering Panel	RPU	Reader Processing Unit

ELID SALES & MARKETING SDN. BHD. (Co. No. 303511-T)
38, Jalan SS 25/28, Taman Mayang,
47301 Petaling Jaya, Selangor Darul Ehsan.
Tel : 03-7048818 (Main Line) Fax : 03-7051506

Title: SINGLE LINE DIAGRAM FOR RPU AND DGP CONFIGURATION	Checked By: ENGINEERING DEPT.
	Approved By: K.S.SU
	Date: 07 JULY 2001
Scale: NOT TO SCALE	Revised No.: 0
Drawing Number: SL/SID./RPU & DGP CONFIGURATION/001	File name: standard/RPU & DGP configuration
Drawn By: LIM WEI WEI	Remarks: CONTROLLED COPY

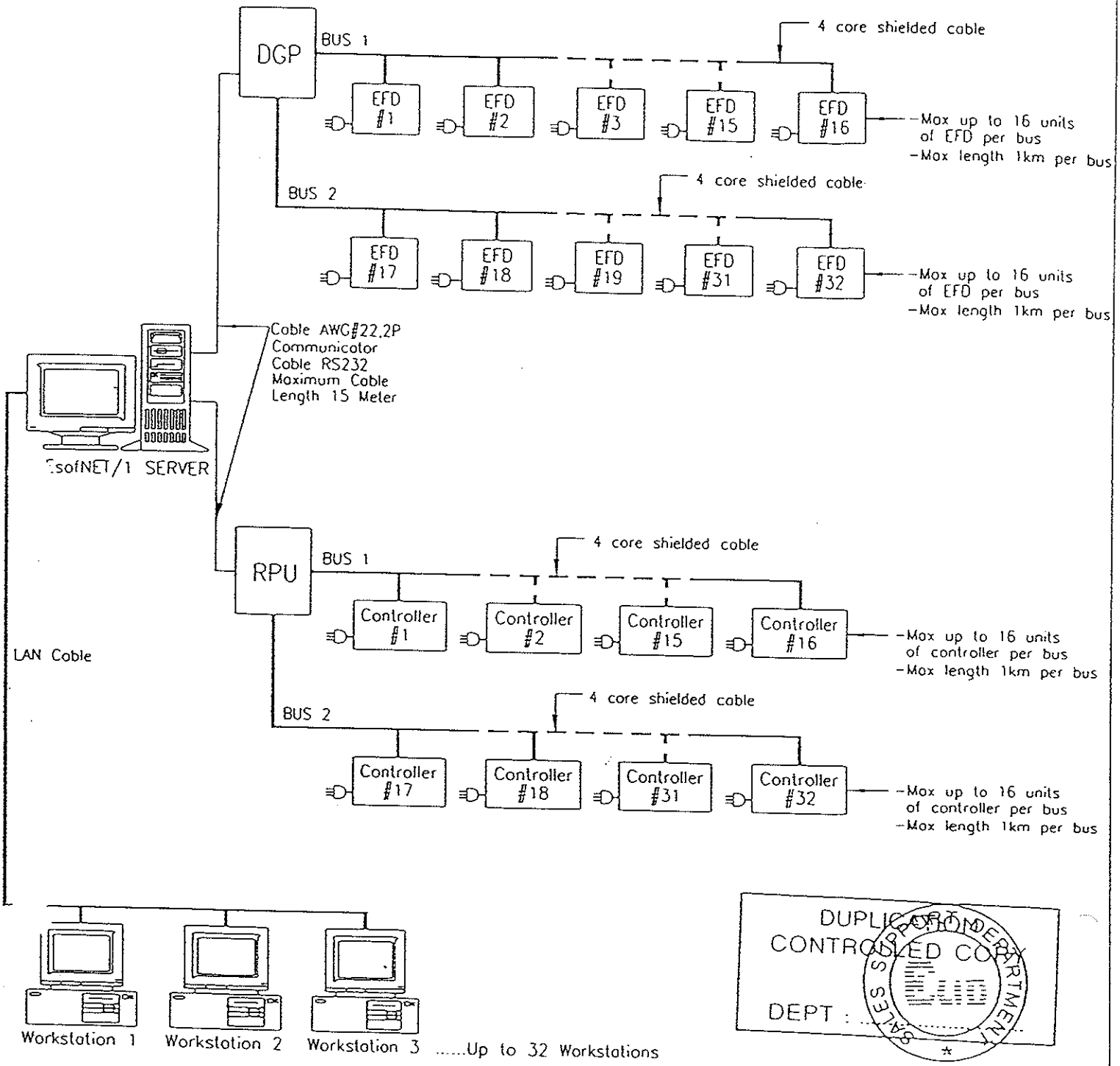

DUPLICATE
CONTROLLED COPY
DEPT : SALES SUPPORT DEPARTMENT

SINGLE LINE DIAGRAM FOR EsofNET/1 SYSTEM

Legend:

- RPU — Reader Processing Unit
- DGP — Data Gathering Panel
- EFD — Intelligent Field Device

Applicable Controller:

- EL1300 Door Access System
- EL220X Door Access System
- FC1205 Car Park Access System
- EL2205L Lift Access System
- ET12XX Time Clock System

ELID SALES & MARKETING SDN. BHD. (co. no. 303511-T)
38, Jalan SS 25/28, Taman Mayang,
47301 Petaling Jaya, Selangor Darul Ehsan.
Tel : 03-7048818 (Main Line) Fax : 03-7051506

Title:	SINGLE LINE DIAGRAM FOR EsofNET/1 SYSTEM
Scale:	NOT TO SCALE
Drawing Number:	SL/STD./EsofNET/1 CONFIGURATION/001
Drawn By:	LIM MEI WEI
Checked By:	R&D DEPT.
Approved By:	HENRY WONG
Date:	20 JULY 2001
Revised No.:	0
File name:	standard/EsofNET 1
Remarks:	

CONTROLLED COPY

DUPLICATION
CONTROLLED COPY
DEPT
SALES SUPPORT DEPARTMENT

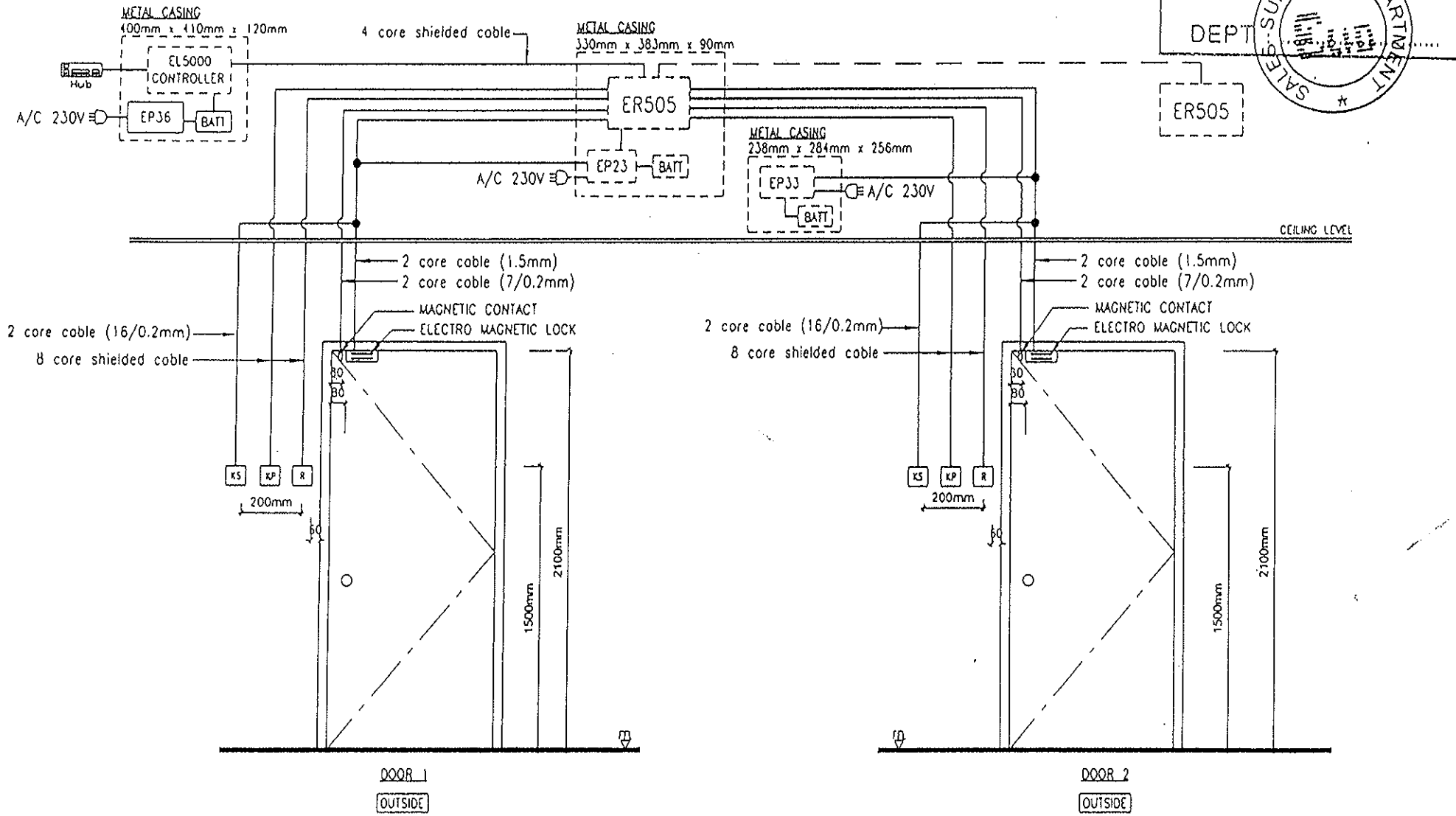

NOTE: 1) Max length from EL505 to each door is 30 meter.
2) Back to back In Reader and Out Reader must be 200mm aparl.

TYPICAL EL5000 TWO DOORS INSTALLATION LAYOUT- INSIDE VIEW

Legend:

R READER	PB PUSH BUTTON	EP33	POWER SUPPLY
KP KEYPAD	BATT BACKUP BATTERY	EP36	POWER SUPPLY
KS KEY SWITCH	EP23 POWER SUPPLY	ER505	READER INTERFACE UNIT
BG BREAK GLASS			

ELID SALES & MARKETING
SDN. BHD. (Co. No: 303511-T)
38, Jalan SS 25/28, Taman Mayang,
47301 Petaling Jaya, Selangor Darul Ehsan.
Tel : 03-7048818 (Main Line) Fax : 03-7051506

Title:
TYPICAL EL5000 TWO DOORS INSTALLATION LAYOUT (OUTSIDE)

Scale: NOT TO SCALE

Drawing Number: DL/STD./EL5000-OUTSIDE/001

Drawn By: LIM WEI WEI

Checked By: ENGINEERING DEPT.

Approved By: K.S.SIA

Date: 07 JULY 2001

Revised No.: 0.

File name: standard/EL5000-outside

Remarks:

CONTROLLED COPY

DUPLICATION CONTROLLED COPY
DEPT
SALES SUPPORT DEPARTMENT

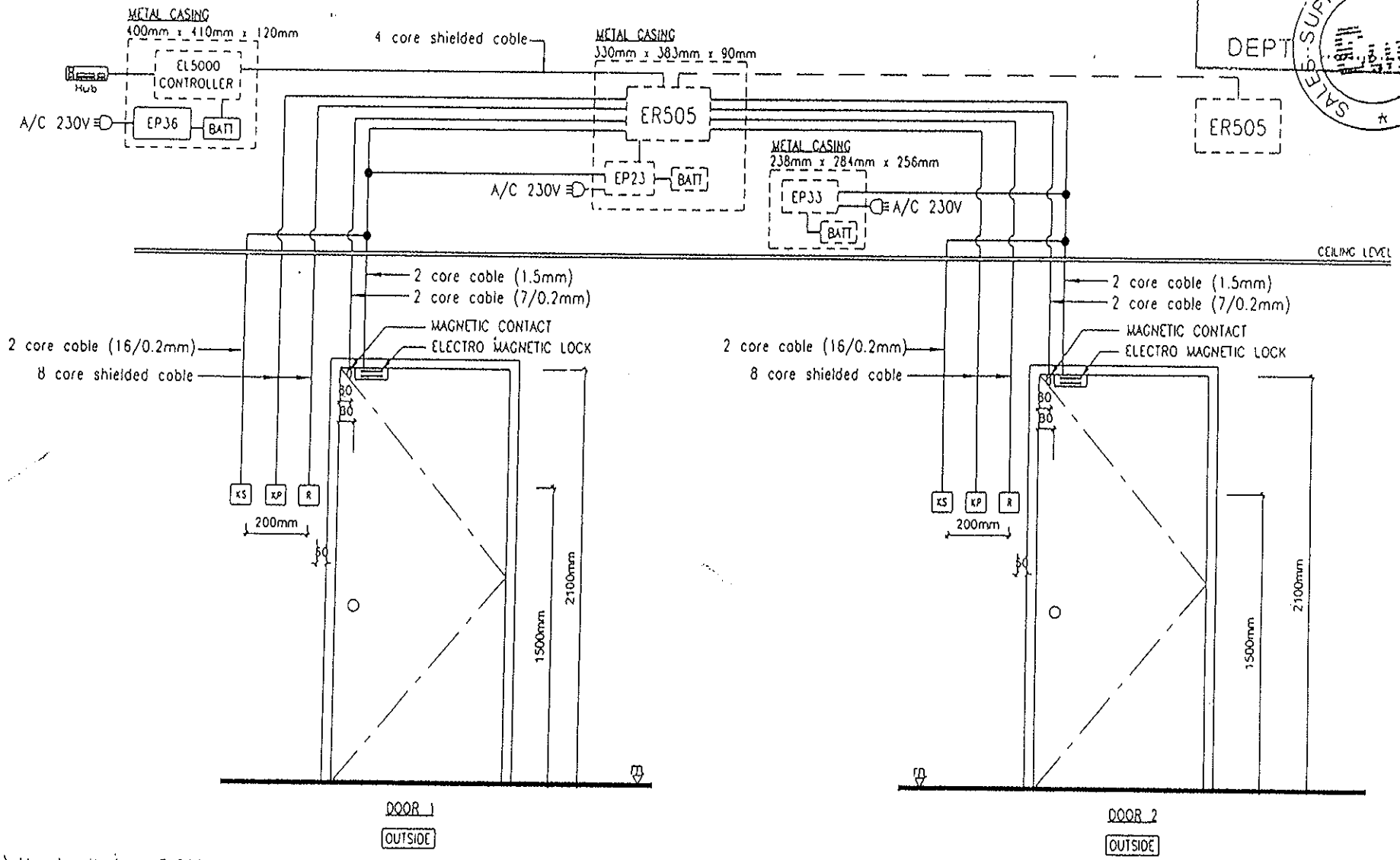

NOTE: 1) Max length from EL505 to each door is 30 meter.
2) Back to back In Reader and Out Reader must be 200mm apart.

TYPICAL EL5000 TWO DOORS INSTALLATION LAYOUT- INSIDE VIEW

Legend:

R READER	PB PUSH BUTTON	EP33	POWER SUPPLY
KP KEYPAD	BATT BACKUP BATTERY	EP36	POWER SUPPLY
KS KEY SWITCH	EP23 POWER SUPPLY	ER505	READER INTERFACE UNIT
BG BREAK GLASS			

ELID SALES & MARKETING
SDN. BHD. (Co. No. 303511-T)
38, Jalan SS 25/28, Taman Mayang,
47301 Petaling Jaya, Selangor Darul Ehsan.
Tel : 03-7048818 (Main Line) Fax : 03-7051506

Title: TYPICAL EL5000 TWO DOORS INSTALLATION LAYOUT (OUTSIDE)

Scale: NOT TO SCALE

Drawing Number: DL/STD./EL5000-OUTSIDE/001

Drawn By: LIM WEI WEI

Checked By: ENGINEERING DEPT.

Approved By: K.S.SIA

Date: 07 JULY 2001

Revised No.: 0

File name: standard/EL5000-outside

Remarks:

CONTROLLED COPY

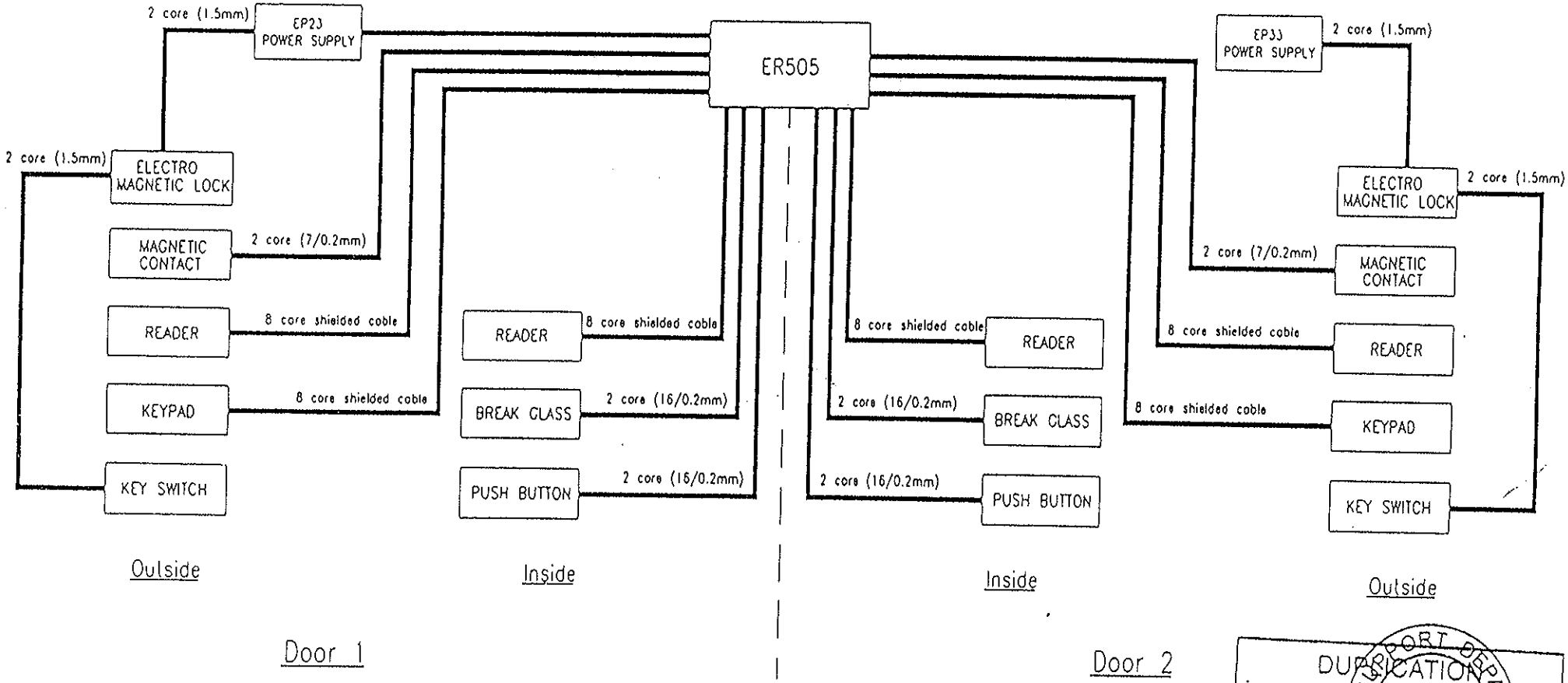

TYPICAL ER505 CABLE SPECIFICATION CONNECTION SCHEMATIC DIAGRAM

DUPLICATION CONTROLLED COPY
SALES SUPPORT DEPARTMENT
ELID
DEPT. : .....

Legend:

ER505 Reader Interface Unit

ELID SALES & MARKETING SDN. BHD. (Co. No: 303511-T)
38, Jalan SS 25/28, Taman Mayang,
47301 Petaling Jaya, Selangor Darul Ehsan.
Tel : 03-7048818 (Main Line) Fax : 03-7051506

Title: TYPICAL ER505 CABLE SPECIFICATION CONNECTION SCHEMATIC DIAGRAM	Checked By: ENGINEERING DEPT.
	Approved By: K.S.SIA
Scale: NOT TO SCALE	Date: 07 JULY 2001
Drawing Number: SL/SID./ER505 SCHEMATIC DIAGRAM/001	Revised No.: 0
Drawn By: UN MEI YEI	File name: standard/ER505(schematic)
	Remarks: CONTROLLED COPY

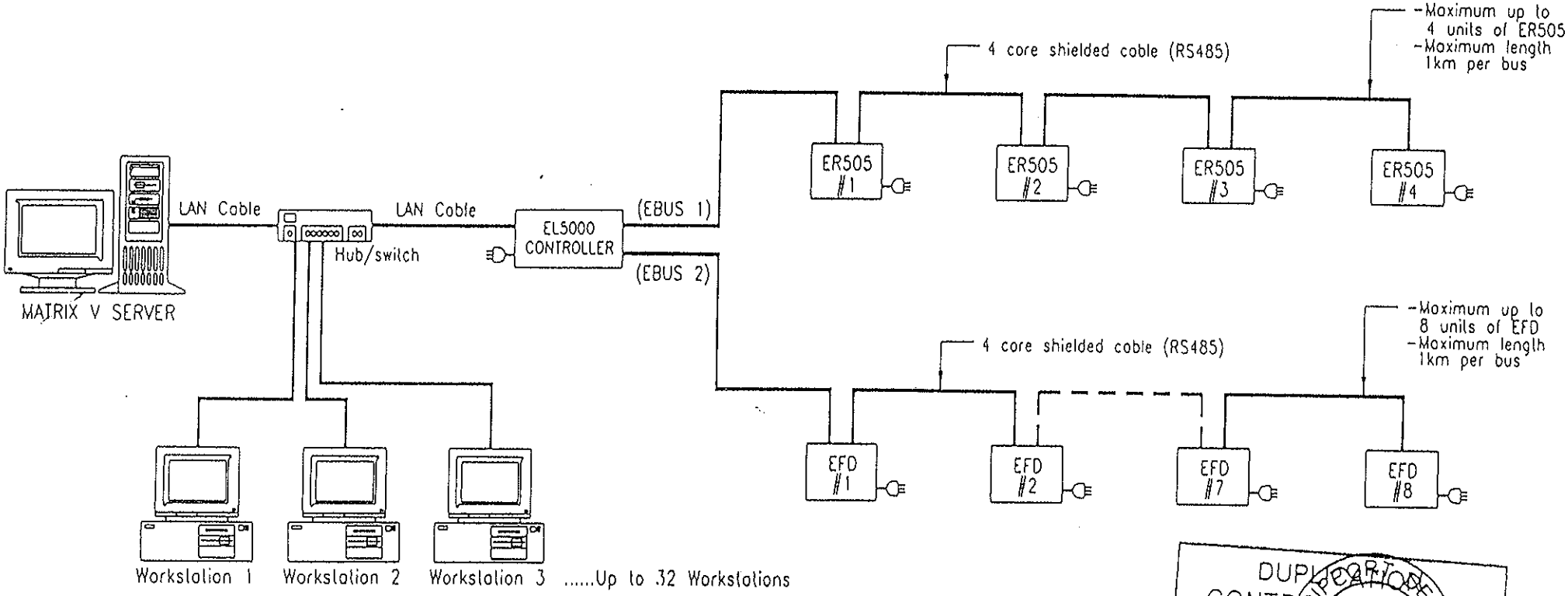

DUPLICATION CONTROLLED COPY
DEPT : .....
SALES SUPPORT DEPARTMENT
ELID

SINGLE LINE DIAGRAM FOR MATRIX V SYSTEM

Legend:

EFD	Intelligent Field Device
ER505	Reader Interface Unit
EL5000 CONTROLLER	Advanced Multi-Door Controller

ELID SALES & MARKETING SDN. BHD. (Co. No. 303511-T)
38, Jalan SS 25/28, Taman Mayang,
47301 Petaling Jaya, Selangor Darul Ehsan.
Tel : 03-7048818 (Main Line) Fax : 03-7051506

Title: SINGLE LINE DIAGRAM FOR MATRIX V SYSTEM	Checked By: R&D DEPT.
	Approved By: HENRY WONG
Scale: NOT TO SCALE	Date: 20 JULY 2001
	Revised No.: 0
Drawing Number: SL/STD./MATRIX V CONFIGURATION/001	File name: standard/Matrix V
Drawn By: LIM MEI WEI	Remarks:

CONTROLLED COPY

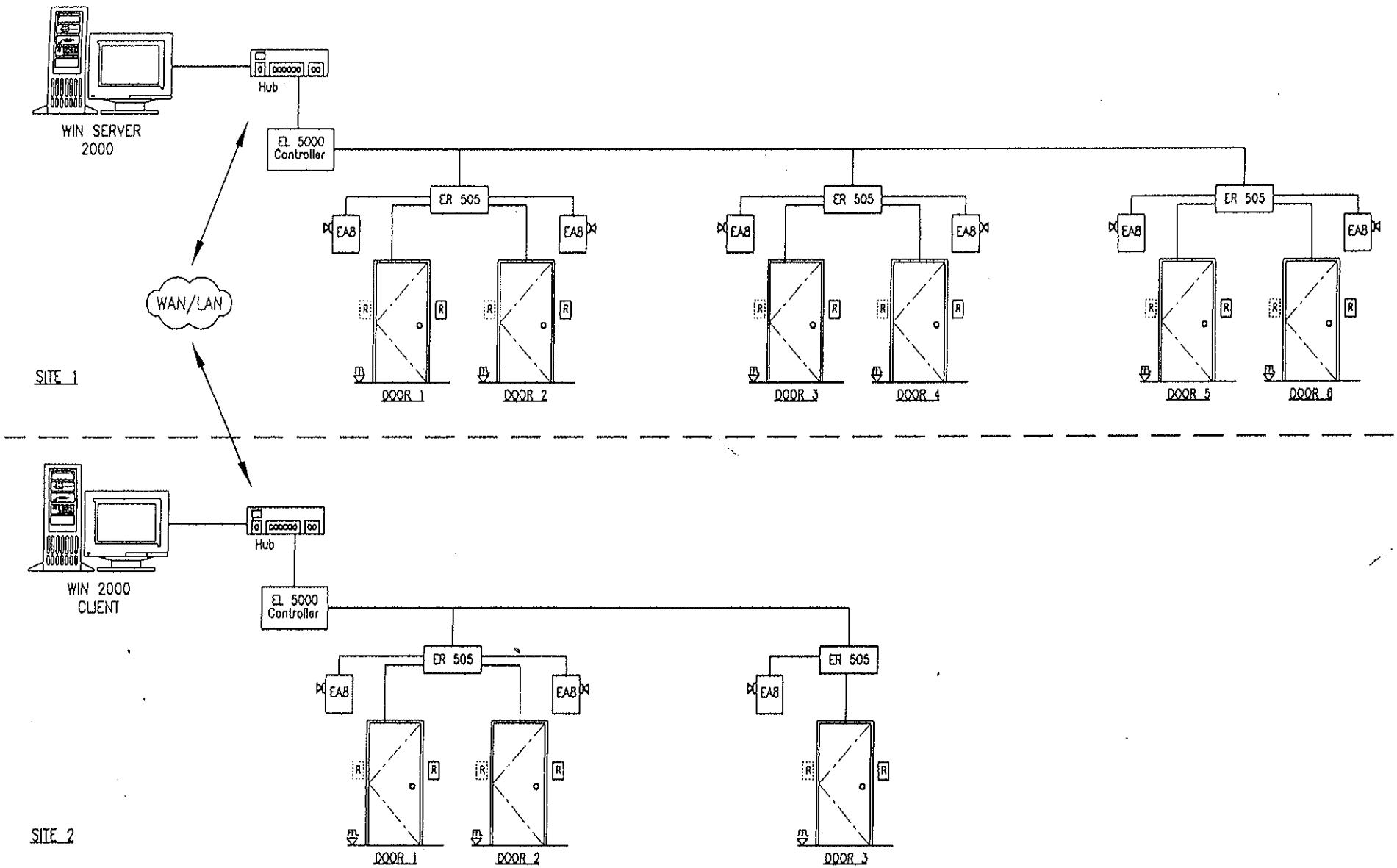

Legend

- EL 5000 Controller — EL 5000 Advanced Multi-Door Controller
- ER 505 — Reader Interface Unit
- EAB — Relay And Sensor Board
- Strobelight
- R — Reader

KLID SDN.BHD. (Co. No: 186491-A)
52, Jalan SS 25/28, Taman Mayang,
47301 Petaling Jaya, Selangor Darul Ehsan.
Tel : 03-7034564 (Main Line) Fax : 03-7034576

Tittle: EL 5000 SYSTEM FOR SPH MEDIA WORK, SINGAPORE

Scale: NOT TO SCALE

Drawing Number: SPH/S'PORE/EL5000/001

Drawn By: LIN WEI WEI

Checked By: BEE LAY

Approved By:

Date: 30 MARCH 2001

Revised No.: 0

File name: bee lay/sph

Remarks:

ELID TECHNOLOGY
INTERNATIONAL PTE LTD

SITE

REFERENCE

COMPANY	*LOCATION*	*SYSTEM*
ACA PACIFIC TECHNOLOGY (S) PTE LT	20 UPPER CIRCULAR ROAD, #03-01/05, THE RIVERWALK	CARD ACCESS SYSTEM
ACMA LTD	17 JURONG PORT ROAD, S(619092)	PROXIMITY CARD ACCESS SYSTEM
ACROMEC ENGINEERS PTE LTD	BLK 3014A, UBI ROAD 1, #06-08, S(408703)	PROXIMITY CARD & PIN ACCESS SYSTEM
AEA INTERNATIONAL	331 NORTH BRIDGE ROAD, #23-01, ODEON TOWER, S(188720)	PROXIMITY CARD ACCESS SYSTEM
AFFINITY COMMUNICATIONS PTE LTD	26 AYER RAJAH CRESCENT, #04-00, AYER RAJAH IND. EST., S(139944)	MAGNETIC & PROXIMITY CARD ACCESS SYSTEM
AFP HILLVIEW PTE LTD	134C HILLVIEW AVENUE, #02-01 HILLTOP GROVE CONDOMINIUM, S(669622)	SMARTAVS GUARD TOUR SYSTEM
AGERE SYSTEMS S'PORE	UPPER SERANGOON NORTH	PROXIMITY CARD ACCESS, CCTV, IDS
AHC ENTERPRISE PTE LTD	243 KAKI BUKIT AVENUE 1, SHUN LI IND. PARK	CCTV SYSTEM
AIS TRADING PTE LTD	36 ROBINSON ROAD, #14-03, CITY HOUSE, S(068877)	CARD ACCESS SYSTEM
AMD FAR EAST LTD	1 TEMASEK AVE., #20-01, MILLENIA TOWER, S(039192)	PROXIMITY CARD ACCESS SYSTEM
AMERTON GLOBAL INNOVATIONS PTE LTD	2 LENG KEE ROAD, #04-11, THYE HONG BLDG., S(159086)	CCTV, MAGNETIC CARD X-CSS & AUDIO INTERCOM SYSTEM
ANG MI KIO TECH II	BLOCK 5, ANG MO KIO INDUSTRIAL PARK 2A	CRYPTAG LONG RANGE CARPARK ACCESS SYSTEM
ANGLISS SINGAPORE PTE LTD	232 PANDAN LOOP	CARD ACCESS SYSTEM
APPLIED MATERIALS S.E.A. PTE LTD	31 KAKI BUKIT ROAD 3, #02-02, TECHLINK, S(417818)	CARD ACCESS SYSTEM
ARETAE INTERACTIVE PTE LTD	20 RAFFLES PLACE, OCEAN TOWER, #26-00, S(048620)	PROXIMITY CARD ACCESS SYSTEM
ASIA SURFACE TECHNOLOGIES PTE LTD	55 LOYANG DRIVE S(508967)	AVS GUARD TOUR SYSTEM & CARPARK BARRIER SYSTEM
ASCENDAS PTE LTD	75 SCIENCE PARK DRIVE, #01-03 CINTECH II, SINGAPORE SCIENCE PARK 1, S(118255)	PROXIMITY CARD ACCESS SYSTEM
ASSOLAND PTE LTD	140 CECIL STREET, #10-01, PIL BUILDING	MAGNETIC CARD ACCESS SYSTEM
ASTOL GREEN CONDOMINIUM	5 PINE GROVE	CARD ACCESS SYSTEM
AUTOMATIC IDENTIFICATION TECHNOLOGY PTE LTD	159 KAMPONG AMPAT ROAD, #06-04, KA PLACE, S(368328)	PROXIMITY CARD ACCESS SYSTEM
AVID TECHNOLOGY (S.E.A) PTE LTD	PERFORMANCE CENTER, #03-01	MAGNETIC CARD ACCESS SYSTEM
BATEY ADS PTE LTD	28 ANN SIANG ROAD	CARD ACCESS SYSTEM
BALESTIER PLAZA	BALESTIER ROAD	LIFT ACCESS SYSTEM
BANK OF EAST ASIA	137 MARKET STREET	PROXIMITY CARD ACCESS SYSTEM

COMPANY	*LOCATION*	*SYSTEM*
BAXTER HEALTH CARE PTE LTD	WOODLANDS INDUSTRIAL PARK D	CARD ACCESS SYSTEM
BAXTER HEALTH CARE - WAREHOUSE	MARSLING LANE	CARD ACCESS SYSTEM
BEAN FACTORY PTE LTD	20 CANTONMENT ROAD, #06-03/04, SOUTH POINT, S(089763)	INTERCOM SYSTEM
BEAVTON COURT APARTMENT	MT. SINAI RIASE	SYRIS LONG RANGE CARPARK ACCESS SYSTEM
BELMORAL TOWER	BELMORAL ROAD	SYRIS LONG RANGE CARPARK ACCESS SYSTEM
BESTWAY PROPERTIES LTD	12 PRINCE EDWARD ROAD, BESTWAY BUILDING	CRYPTAG LONG RANGE CARPARK ACCESS SYSTEM
BIOFIT TECHNOLOGY & SERVICES PTE LTD	CECIL STREET, #07-02 CECIL COURT	PROXIMITY CARD ACCESS SYSTEM
BP SINGAPORE PTE LTD	PASIR PANJANG ROAD	CARD ACCESS SYSTEM
CAAS	CHANGI INTERNATIONAL AIRPORT (T2 BUILDING)	ESOFNET INTEGRATED SECURITY SYSTEM
CABELTRON	THE CABERDISH, #03-03	CARD ACCESS SYSTEM
CAIRNHILL PLAZA	53 CAIRNHILL ROAD	MAGNETIC CARD ACCESS SYSTEM
CALDECOTT PUBLISHING	298 TIONG BAHRU ROAD, #19-01/06, TIONG BAHRU PLAZA, S(168730)	CARD ACCESS SYSTEM
CARNUDMETAL BOX PACKAGING PTE LTD	455 JALAN AHMAD IBRAHIM ROAD, S(369936)	MAGNETIC CARD ACCESS SYSTEM
CASA ROSA CONDOMINIUM	LORONG HOW SUN ROAD	CRYPTAG LONG RANGE CARPARK ACCESS SYSTEM
CATERPILLAR ASIA PTE LTD	7 TRACTOR ROAD	CARD ACCESS SYSTEM
CATHAY ORGANISATION HOLDINGS LTD	2 HANDY ROAD, #05-00, CATHAY BUILDING, S(229233)	PROXIMITY CARD ACCESS & BURGLAR ALARM SYSTEM
CCA PLASTIC TRADING PTE LTD	36 ROBINSON ROAD #14-03 CITY HOUSE, S(068877)	KEYPAD ACCESS SYSTEM
CDL BUILDING	80 ROBINSON ROAD, S(068898)	CARD ACCESS & ELECTRONICS TIME CLOCK SYSTEM
CEI ELECTRONICS MFG. PTE LTD	19A SERANGOON NORTH AVE. 5, #01-00, AVI-TECH BLDG., S(554859)	PROXIMITY CARD ACCESS SYSTEM
CENTRAL SQUARE CONDOMINIUM	20 HAVELOCK ROAD	SYRIS LONG RANGE CARPARK ACCESS SYSTEM
CHALLENGIER TECHNOLOGIES PTE LTD	SIM LIM TOWER	ELECTRONICS TIME CLOCK WITH MODEM LINK
CHALLENGIER TECHNOLOGIES PTE LTD	CHANGI INTERNATIONAL AIRPORT	ELECTRONICS TIME CLOCK WITH MODEM LINK
CHALLENGIER TECHNOLOGIES PTE LTD	109 NORTH BRIDGE RD., #07-00, FUNAN CTR., S(179097)	MAGNETIC CARD X-CSS & ELECTRONICS TIME CLOCK WITH MODEM LINK

COMPANY	*LOCATION*	*SYSTEM*
CHAMPS INDUSTRIAL PTE LTD	45 KAKI BUKIT PLACE, S(416223)	CCTV SYSTEM
CHAN BROTHERS TRAVEL	150 SOUTH BRIDGE ROAD, #10-01, FOOK HAI BUILDING	CARD ACCESS SYSTEM
CHANCELODGE PLACE	105 SIMS AVENUE, S(387429)	CRYPTAG LONG RANGE CARPARK ACCESS SYSTEM
CHEE CHOON & ASSOCIATES CONSULTING ENGINEERS	2 LENG KEE RD., #04-10, THYE HONG BLDG., S(159086)	PROXIMITY CARD ACCESS SYSTEM
CHEVRON ORONITE PTE LTD	21 SAKRA ROAD, JURONG ISLAND	AVS GUARD TOUR SYSTEM
CHEZ BRIGHT CONDOMINIUM	18 ST. THOMAS WALK, S(238106)	MAGNETIC CARD ACCESS SYSTEM
CHINATOWN PLAZA (MCST 1033)	CRAIG ROAD	CRYPTAG LONG RANGE CARPARK ACCESS SYSTEM
CHRISTIANIA BANK	50 RAFFLES PLACE, #15-01 SINGPORE LAND TOWER, S(048623)	CARD ACCESS & KEYPAD ACCESS SYSTEM
CHUAN EU TRADING CO	FU LU SHOU COMPLEX #05-09	MAGNETIC CARD ACCESS SYSTEM
CIAS - COMPUTER ROOM & MS DEPT	CISA BUILDING	CARD ACCESS & BURGLAR ALARM SYSTEM
CIVIL SERVICE COLLEGUE	TEMESAK TOWER 14TH & 34TH FLOOR	CARD ACCESS SYSTEM
COLD STORAGE	PEACE CENTRE 7TH FLOOR	PROXIMITY CARD ACCESS & AUDIO INTERCOM SYSTEM
COMFORT DRIVING CENTRE PTE LTD	205 UBI AVENUE 4 #01-00	MAGNETIC CARD ACCESS & AUDIO INTERCOM SYSTEM
COMPAQ COMPUTER	YISHUN AVENUE 7	CARD ACCESS SYSTEM
COMPUMEDICS (S) PTE LTD	7500A BEACH ROAD, #10-323 THE PLAZA, S(199591)	PROXIMITY CARD ACCESS SYSTEM
CONNY MECHATEONICS (S) PTE LTD	122 PIONEER ROAD, S(639583)	CARD ACCESS SYSTEM
COSTA SAND RESORT	110 EAST COAST PARKWAY, #01-01	CARD ACCESS, CCTV & TURNSTILE SYSTEM
CPF	JURONG EAST BRANCH	ALARM MONITORING & GUARD TOUR SYSTEM
CRAIG PLACE	23 CRAIG ROAD	PROXIMITY CARD ACCESS & SYRIS CARPARK X-CSS SYSTEM
CRIME PREVENTION ROOM	PEARL'S HILL POLICE	CARD ACCESS SYSTEM
CSE SYSTEMS & ENGINEERING LTD	19A SERANGOON NORTH AVE 5, #03-00, AVI-TECH BLDG., S(554859)	PROXIMITY CARD ACCESS SYSTEM
CST PTE LTD	ANG MO KIO IND PK 2	CARD ACCESS SYSTEM
CUSCADEN TOWER	6 CUSCADEN WALK STATION	LIFT ACCESS CONTROL SYSTEM
CYCECT SINGAPORE PTE LTD	30 LU FANG ROAD, S(628682)	CARPARK BARRIER SYSTEM
DAIMLER CHAYSLER PTE LTD	150 BEACH ROAD, 16TH FLOOR GATEWAY WEST	CARD ACCESS SYSTEM
DATASTREAM-SIS PTE LTD	315 ALEXANDRA ROAD, #05-03, PERFORMANCE CENTER	CARD ACCESS SYSTEM

COMPANY	*LOCATION*	*SYSTEM*
DBS BANK (ALL BRANCHES IN SINGAPORE)		CARD ACCESS SYSTEM
DELTA OVERSEAS INVESTMENTS PTE LTD	7 TEMASEK BOULEVARD #23-03 SUNTEC TOWER 1, S(038987)	KEYPAD ACCESS SYSTEM
DELGRO COPORATION PTE LTD	205 BRADDELL ROAD S(579701)	CARPARK BARRIER SYSTEM & FULL HEIGHT TURNSTILE
DICKSON TRADING	NGEE ANN CITY 17TH FLOOR TOWER A	CARD ACCESS SYSTEM
DIGIQUANT ASIA PTE LTD	80 ROBINSON ROAD, #11-00, S(068898)	PROXIMITY CARD ACCESS SYSTEM
DMJ INTERIOR DESIGN	1 KIM SENG PROMENADE, #03-16, GREAT WORLD CITY, S(237994)	CARD ACCESS SYSTEM
DOVER PALISADES PTE LTD	38 DOVER RISE #01-01 (TOWER A), S(138684)	LONG RANGE PROXIMITY SYSTEM & CARPARK BARRIER GATE
D'RAY CONSTRUCTION PTE LTD	344 EAST COAST ROAD, S(428936)	CARD ACCESS SYSTEM
DREAMTAP HOLDINGS (SINGAPORE) PTE LTD	105 CECIL STREET, #07-03 THE OCTAGON, S(069534)	PROXIMITY CARD ACCESS SYSTEM
DOVER PARKVIEW CONDOMINIUM	LEORNIE HILL ROAD	SYRIS LONG RANGE CARPARK ACCESS SYSTEM
DP COMPUTERS PTE LTD	128 JOO SENG ROAD, #07-00, DP COMPUTER BUILDING	CARD ACCESS SYSTEM
EAST POINT GREEN CONDOMINIUM	20 SIMEI STREET 3, S(529886)	PROX. CARD X-CSS, SYRIS LONG RANGE CARPARK X-CSS & AVS GUARD TOUR SYSTEM
E-BRILLIANT PTE LTD	27 INTERNATIONAL BUSINESS PARK, 4TH FLOOR	CARD ACCESS SYSTEM
ECS COMPUTERS (ASIA) PTE LTD	BLK 19 KALLANG AVENUE, #07-153/159, S(339410)	CARD ACCESS SYSTEM
EDS INT'L (S) PTE LTD	NGEE ANN CITY, 17TH FLOOR, TOWER B	CARD ACCESS SYSTEM
eGLOBAL TECHNOLOGY SERVICES PTE LTD	9 PENANG ROAD, #10-08, PARK MALL, S(9238459)	PROXIMITY CARD ACCESS SYSTEM
EINFOASIA (S) PTE LTD	4 LENG KEE ROAD, #02-03 SIS BUILDING, S(159088)	PROXIMITY CARD ACCESS SYSTEM
ELECTION DEPARTMENT	78 PRINSEP STREET, S(188650)	CARD ACCESS SYSTEM
ELIZABETH HEIGHT CONDO	57 CARINHILL ROAD, S(229668)	PROXIMITY CARD X-CSS, SYRIS LONG RANGE PROXIMITY READER & BARRIER GATE
EMI MUSIC PUBLISHING SINGAPORE	213 HENDERSON ROAD #04-06 HENDERSON INDUSTRIAL PARK S(159553)	PROXIMITY CARD ACCESS SYSTEM
ENDRESS + HAUSER (SEA) PTE LTD	1 INT'L BUSINESS PARK, #01-11/12, THE SYNERGY	MAGNETIC CARD ACCESS SYSTEM
EQUUS HOLDING PTE LTD	2 HANDY ROAD, #06-01, CATHAY BUILDING, S(229233)	CARD ACCESS & BURGLAR ALARM SYSTEM
ESPN STAR SPORTS	151 LOR CHUN, #03-01, NEW TECH PARK, S(556741)	ECL8010 EXIT PUSH-BAR WITH ALARM
EUNOS MANSION	BEDOK RESERVIOUR ROAD	SYRIS LONG RANGE CARPARK ACCESS SYSTEM

COMPANY	*LOCATION*	*SYSTEM*
EXCELLANCE BLDG	LORONG 26 GEYLANG	LIFT ACCESS CONTROL SYSTEM
EXCEL-MAX COMMUNICATIONS PTE LTD	BLK 514 CHAI CHEE LANE, #03-315, S(469029)	CARD ACCESS SYSTEM
EXCO AP	STANDARD CHARTERED BUILDING	CARD ACCESS SYSTEM
EXER TECHNOLOGIES (S) PTE LTD	45 KAKI BUKIT INDUSTRIAL TERRACE S(416125)	PROXIMITY CARD ACCESS, SECURITY ALARM & PHONE ENTRY SYSTEM
FANTASY ISLAND	SENTOSA	CCTV SYSTEM
FAR EAST SECURITY & INVESTIGATION PTE LTD	150 SOUTH BRIDGE ROAD, #05-06, FOOK HAI BUILDING	CARD ACCESS SYSTEM
FAR EAST SHOPPING CENTRE	545 ORCHARD ROAD, S(238882)	SYRIS LONG RANGE CARPARK ACCESS SYSTEM
FAR SKYLE INVESTMENTS PTE LTD	7 TEMASEK BOULEVARD, #23-01, SUNTEC TOWER 1, S(038987)	PROXIMITY CARD ACCESS SYSTEM
FEEDERMAX PTE LTD	70 SHENTON WAY, #16-01, MARINA HOUSE, S(079118)	CARD ACCESS SYSTEM
FENDERCARE MARINE ASIA PACIFIC PTE LTD	1 MARITIME SQUARE, #10-28 WORLD TRADE CENTRE, S(099253)	PIN ACCESS SYSTEM
FERRIER LULLIN & CIE	UOB PLAZA 1	CARD ACCESS & CCTV SYSTEM
FERROTEC CORP S'PORE PTE LTD	BLK 21 KALLANG AVE, #05-173, KALLANG BASIN IND. EST., S(339412)	MAGNETIC CARD ACCESS SYSTEM
FIRST ACCESS INTERNATIONAL PTE LTD	NO.2 KALLANG PUDDING ROAD #01-02 MACTECH INDUSTRIAL BUILDING S(349307)	PROXIMITY CARD ACCESS SYSTEM
FIRST ENGINEERING LIMITED	26 WOODLANDS LOOP	PROXIMITY CARD ACCESS & BIOMETRIC TIME ATTENDANCE SYSTEM
FONG HAQUE & SOH PTE LTD	141 NORTH BRIDGE RD #01-03 DESIGN CENTRE	MAGNETIC CARD ACCESS SYSTEM
FORMUL8 MEDIA PTE LTD	13 ANN SIANG ROAD, S(069693)	MAGNETIC SWIPE ACCESS SYSTEM
FUTURA TOWER	14 LEONIE HILL ROAD	CARD ACCESS SYSTEM
GAFFNEY, CLINE & ASSOCIATES (CONSULTANTS) PTE LTD	80 ANSON ROAD, 331-01C IBM TOWER, S(079907)	PIN ACCESS SYSTEM & INTERCOM SYSTEM
GEYLANG NEIGHBOURHOOD POLICE CENTRE	PAYA LEBAR ROAD	CYRPTAG LONG RANGE CARPARKING SYSTEM
GG>5 PTE LTD	BLK 30 KALLANG PLACE, #04-18/20	CARD ACCESS SYSTEM
GIVAUDAN ROURE PTE LTD	1 WOODLANDS AVENUE 8	AVS GUARD TOUR SYSTEM
GLENAYRE ELECTRONICS (S) PTE LTD	NO.8 ANG MO KIO IND PK 2 S(569500)	CARD ACCESS SYSTEM

COMPANY	*LOCATION*	*SYSTEM*
GMTI BUILDING	6 COMMONWEAKTH LANE, S(149547)	CRYPTAG LONG RANGE CARPARK ACCESS SYSTEM
GOODYEAR SINGAPORE PTE LTD	9 PENANG ROAD, #08-06, PARK MALL, S(9238459)	CARD ACCESS SYSTEM
GOOD LUCK GARDEN APARTMENT	TOH TUCK ROAD	SYRIS LONG RANGE CARPARK ACCESS SYSTEM
GREAT EASTERN MANSION	TAMAN NAKHODA	PROXIMITY CARD ACCESS & LONG RANGE PROXIMITY CARPARK SYSTEM
GREAT WORLD CITY	1 KIM SENG PROMENADE, GREAT WORLD CITY, S(237994)	FEP-ALARM MONITORING SYSTEM
GREATLAND DEVELOPMENT PTE LTD	750A NORTH NRIDGE ROAD, S(569500)	CARD ACCESS SYSTEM
GRIC ASIA-PACIFIC PTE LTD	73 SCIENCE PARK DRIVE, #01-01/02, CINTECH I, S(118254)	PROXIMITY CARD ACCESS'
HAARMANN & REIMER (SEA) PTE LTD (H&R)	190 PANDAN LOOP, S(128379)	WIEGAND, TIME CLOCK & CARPARK BARRIER GATE
HAI SENG HENG FISHERY TRADING	35 FISHERY PORT ROAD, #05-404, FISH MERCH BLDG, S(619742)	MAGNETIC CARD ACCESS SYSTEM
HAI SUN HUP PTE LTD	20 CANTOMENT ROAD, #09-00, SOUTH POINT, S(089763)	MAGNETIC CARD ACCESS SYSTEM
HAUS DESIGN & MARKETING PTE LTD	BLK 101 EUNOS AVENUE 6, S(409623)	KEYPAD ACCESS SYSTEM
HDB ESTATE	BLK 104-107 JALAN BUKIT MERAH	AVS GUARD TOUR SYSTEM
HELM TECHNOLOGY	CITITECH IND BLDG, #07-19	MAGNETIC CARD ACCESS SYSTEM
HIAP SENG ENGINEERING LTD	4 BENOI PLACE	AVS GUARD TOUR SYSTEM
HIGH MEAN LTD	BLK 52 CHIN SWEE ROAD, #03-25, S(160053)	CARD ACCESS SYSTEM
HIGH TIDE FROZEN FOOD PTE LTD	402 FISHERY PORT ROAD, 32 CENTRAL FISH MARKET, S(2261)	MAGNETIC CARD ACCESS SYSTEM
HIS SANTUARY SERVICES	TOWNER P.O.BOX 0218, S(913228)	CARD ACCESS & BURGLAR ALARM SYSTEM
HITACHI NIPPON STEEL SEMICONDUCTOR	1 TAMPINES AVE 5, S(528830)	PROXIMITY CARD ACCESS & CCTV SYSTEM
HOA NAM BUILDING	27 FOCH ROAD, S(209264)	LIFT ACCESS & BURGLAR ALAM SYSTEM
HONG LEONG CORPORATION	16 RAFFLES QUAY, 26TH FLOOR, HONG LEONG BLDG, S(048581)	PROXIMITY CARD ACCESS SYSTEM
HORIZON TOWER	LEONIE HILL ROAD	LIFT ACCESS SYSTEM
HOTEL PLAZA	7500A BEACH ROAD, PLAZA HOTEL, S(199591)	MAGNETIC CARD ACCESS SYSTEM, CCTV SYSTEM & BARRIER GATE

COMPANY	*LOCATION*	*SYSTEM*
I-GLORE PARTNERS PTE LTD	435 ORCHARD ROAD, #19-03 WISMA ATRIA, S(238877)	PROXIMITY CARD ACCESS SYSTEM
IDEAL COMMERICAL SERVICES PTE LTD	111 NORTH BRIDGE ROAD, #21-01, PENINSULA PLAZA, S(179098)	CARD ACCESS SYSTEM
INCHCAPE MARKETING SERVICES	60 MARTIN ROAD, #01-44, TRADEMARK BUILDING, S(239065)	KEYPAD ACCESS SYSTEM
INFOFAX SERVICES (S) PTE LTD	10 UBI CRESCENT, #03-19 UBI TECHPARK, S(408564)	PROXIMITY CARD ACCESS SYSTEM
INSTITUTE OF MICROELECTRONIC	CHAI CHEE COMPLEX	CARD ACCESS SYSTEM
ISUZU MOTORS PTE LTD	SUNTEC CITY TOWER II, #22-03	CARD ACCESS SYSTEM
IT CONSULTANCY & SERVICES PTE LTD	7A ALIWAL STREET, CHENN LEONN BLDG, S(199900)	PROXIMITY CARD ACCESS SYSTEM
ITI CORPORATION	13 JOO KOON CRESCENT	LIFT ACCESS SYSTEM
IZ MARKETING PTE LTD	35 TANNERY ROAD, #06-01 TANNERY BLOCK, S(347740)	PIN ACCESS SYSTEM
J.B. CONDO	JOHORE BAHRU	ALARM MONITORING SYSTEM
JTC BLOCK 1004	TOA PAYOH NORTH	CYRPTAG LONG RANGE CARPARKING SYSTEM
JTC FLATTED FACTORY	171 KALLANG WAY, S(349250)	SYRIS LONG RANGE CARPARK ACCESS SYSTEM
JURONG HI-TECH	28 TANJONG KLING ROAD, S(628053)	TIME CLOCKB SYSTEM
KA SHIN TECHNOLOGY (S) PTE LTD	2 BALESTIER ROAD, #04-701, S(320002)	CARD ACCESS SYSTEM
KAKI BUKIT DEVELOPMENTS PTE LTD	2 KAKI BUKIT AVE 4	GUARD TOUR SYSTEM & AUTO SWING GATE
KAMPONG BUGIS	KAMPONG BUGIS ROAD	CRYPTAG LONG RANGE CARPARK ACCESS SYSTEM
KING'S MANSION	12 AMBER GARDEN	CRYPTAG LONG RANGE CARPARK ACCESS SYSTEM
KINGSTON PROPERTY & MAINTENANCE PTE LTD	16 RAFFLES QUAY, #06-00 HONG LEONG BUILDING, S(048581)	SMARTAVS GUARD TOUR SYSTEM
KVANERNER RJ BROWN PTE LTD	73 SCIENCE PARK DRIVE, #02-14, CINTECH 1, S(118254)	PROXIMITY CARD ACCESS SYSTEM
KURIC & SOFFA	SERANGOON NORTH AVE 5	PROXIMITY CARD ACCESS SYSTEM
LARRY JEWELRY (S) PTE LTD	ORCHARD TOWERS #01-10	MAGNETIC CARD ACCESS & KEYPAD ACCESS SYSTEM
LEE KAI HOUSE	114 MIDDLE ROAD, S(118971)	CCTV & BURGLAR ALARM SYSTEM
LEISUREQUEST PTE LTD	1 PASIR RIS CLOSE, S(519599)	PIN ACCESS SYSTEM
LENG KEE COMMUNITY CTR (READING RM)	LEMG KEE ROAD,	MAGFNETIC CARD ACCESS SYSTEM
LEONIE GARDEN (MCST PLANT NO. 1898)	23 LEONIE HILL, S(239224)	CCTV & TELEPHONE ENTRY INTERCOM SYSTEM

COMPANY	*LOCATION*	*SYSTEM*
LESCHACO PTE LTD	11 KEPPEL ROAD, #12-00, rcl BUILDING	CARD ACCESS SYSTEM
LG INDUSTRY SYSTEM S'PORE PTE LTD	240 MACPHERSON ROAD, #07-05, PINES INDUSTRIAL BUILDING, S(348574)	PROXIMITY CARD ACCESS SYSTEM
LIAN SIN FA ELECTRONICS (S) PTE LTD	629 ALJUNIED ROAD, #06-16, S(389838)	CARD ACCESS SYSTEM
LIANG COURT	177 RIVER VALLEY ROAD	AVS GUARD TOUR SYSTEM
LIBHERR-AEROSPACE SINGAPORE	8 PANDAN AVENUE, S(128464)	MAGNETIC CARD ACCESS SYSTEM
LITE-ON PTE LTD	203 HENDERSON ROAD, WING B, #07-07, HENDERSON IND. EST., S(159547)	MAGNETIC CARD ACCESS SYSTEM
LKH2 BUILDING (ASTRO PARKING)	76 PLAYFAIR RD, LKH2 BUILDING, S(367996)	PROXIMITY CARD ACCESS SYSTEM FOR CARPARK
LONG AN PROPERTY DEVE PTE LTD	112 LAVANDER STREET, #04-02, S(338728)	MAGNETIC CARD ACCESS SYSTEM
LONG HUA TEMPLE	MOULMEIN ROAD	CARD ACCESS SYSTEM
LUCENT TECHNOLOGIES	6 SERANGOON NORTH AVE 5,	PROXIMITY CARD ACCESS & CCTV SYSTEM
M BOLD & FRIENDS PTE LTD	10 ANSON ROAD, #22-06 INTERNATIONAL PLAZA, S(079903)	PROXIMITY CARD ACCESS & INTERCOM SYSTEM
MALACCA CENTRE	20 MALACCA ST #11-00	MAGNETIC CARD ACCESS SYSTEM
MAN-DRAPEAU RESEARCH LTD	71A TRAS STREET	CARD ACCESS SYSTEM
MANTRO MARINE SERVICES	BLK 211, HENDERSON ROAD, #05-02	CARD ACCESS SYSTEM
MARINE PARADE COMMUNITY BUILDING	278 MARINE PARADE ROAD	SMARTAVS GUARD TOUR SYSTEM
MARG ENGINEERING	BLK 2001, BUKIT BATOK STREET 22, #03-04	CARD ACCESS SYSTEM
MANUFACTURING INTEGRATION TECH. P/L	BLK 5004 ANG MO KIO AVENUE 5, TECHPLACE II, #03-12, S(569872)	BAR-CODE CARD ACCESS SYSTEM
MARINA MANDARIN HOTEL	RAFFLES BLVD	LIFT ACCESS SYSTEM
MARITIME & PORT AUTHORITY OF S'PORE	460 ALEXANDRA ROAD, 21ST STOREY, PSA BUILDING, S(119963)	MAGNETIC CARD ACCESS SYSTEM
MARTIA 8 CONDOMINIUM	8 MARTIA ROAD	PROXIMITY CARD ACCESS SYSTEM & CRYPTAG LONG RANGE PROXIMITY SYSTEM
MARUBENI INTERNATIONAL PETROLEUM (S) PTE LTD	16 RAFLES QUAY, #39-02 HONG LEONG BUILDING, S(048581)	PROXIMITY CARD ACCESS SYSTEM
MARYLAND PARK CONDO	AMBER GARDEN	PROX. CARD X-ACSS, CCTV, LONG RANGE PROX. CAR X-CSS SYS.

COMPANY	*LOCATION*	*SYSTEM*
MATSUSHITA SEMICONDUCTOR SINGAPORE PTE LTD	22 ANG MO KIO INDUSTRIAL PARK 2 S(4816486)	AVS GUARD TOUR SYSTEM
MATTEL SOUTHEAST ASIA	1 SCOTTS ROAD, #23-05/06, SHAW CENTER	CARD ACCESS SYSTEM
MCD BUILDING	PEARL'S HILL	CARD ACCESS SYSTEM
MCST 1482 - CHAN KOK HONG	KATONG PARK TOWER	CARPARK BARRIER
MCST 1873 - CHAN KOK HONG	ROXY SQUARE	GUARD TOUR SYSTEM
MCST 297	NO.2 OFF MEYER RD	CCTV & INTERCOM SYSTEM
MCST 2343	NOVOCREST APARTMENT - 17 PECK HAY ROAD	LIFT ACCESS SYSTEM
MEDIA CORPORATION	ANDREW ROAD	CARD ACCESS, CCTV, CARPARK & INTERCOM SYSTEM
MEGACHEM PTE LTD	132 PIONEER ROAD, JURONG TOWN, S(639588)	
MELVILLE PARK CONDOMINIUM	SIMEI STREET 1	MAGNETIC CARD ACCESS SYSTEM
MERA SAGA CONDOMINIUM	JALAN MERA SAGA	LONG RANGE PROX. CAR X-CSS SYS., GUARD TOUR
MERAWOOD CONDOMINIUM	136 HILLVIEW AVENUE	AVS GUARD TOUR SYSTEM
METRO HOLDING	LUCKY PLAZA 5TH STOREY	CARD ACCESS SYSTEM
METROLOGICAL DEPT	CHANGI INT'L AIRPORT (T2 BUILDING)	CARD ACCESS & CCTV SYSTEM
MGE ASIA PTE LTD	6 TAGORE DRIVE, #01-06/07	CARD ACCESS & AUDIO INTERCOM SYSTEM
MICR GASKET TECHNOLOGY	67 AYER RAJAH CRESCENT, #04-11 AYER RAJAH INDUSTRIAL ESTATE, S(139950	PIN ACCESS SYSTEM
MINISTRY OF DEFENCE	GOMBAK RD	ESOFNET INTEGRATED SECURITY SYSTEM & INTERCOM SYSTEM
MINISTRY OF FINANCE (BUDGETARY DIV.)	TEMEKSAK TOWER, 43TH STOREY	MAGNETIC CARD ACCESS & AUDIO INTERCOM SYSTEM
MITSUBISHI ELECTRIC BLDG	307 ALEXANDRA RD, MITSUBISHI ELECTRIC BUILDING, S(159943)	LIFT ACCESS SYSTEM
MMS CONSULTANCY (ASIA) PTE LTD	11 ANSON ROAD, #05-21 INTERNATIONAL PLAZA, S(079903)	PROXIMITY CARD ACCESS, ALARM SYSTEM & CCTV SYSTEM
MOBIL CHEMICAL PROD INT'L PTE LTD	101 THOMSON ROAD, #12-04, UNITED SQUARE, S(307591)	MAGNETIC CARD ACCESS SYSTEM
MODE CIRCLE	85 DEFU LANE 10, S(539218)	CARD ACCESS SYSTEM
MONTFORT SECONDARY SCHOOL	50 HOUGANG AVENUE 8	PROXIMITY CARD ACCESS SYSTEM
MOONSTONE APARTMENT	MOONSTONE LANE	CRYPTAG LONG RANGE CARPARK ACCESS SYSTEM
MOTOROLA	DEFU LANE 10 MODE CIRCLE BLDG	CARD ACCESS & BURGLAR ALARM SYSTEM
MOUNT ALVERNIA HOSPITAL	820 THOMSON ROAD, S(574623)	CCTV SYSTEM

COMPANY	*LOCATION*	*SYSTEM*
MULTITECH SYSTEM PTE LTD	25 KALLANG AVE, #03-05, S(339416)	CARD ACCESS SYSTEM
NATIONAL OXYGEN PTE LTD	29 TANJONG KLING ROAD	CCTV, CRYPTAG LONG RANGE CARPARK ACCESS SYSTEM
NATIONAL SKIN CENTRE	1 MANDALAY ROAD	CCTV SYSTEM
NATIONAL STADIUM	1 STADIUM WALK VIP CARPARK	AVS GUARD TOUR SYSTEM
NATIONAL UNIVERSITY HOSPITAL	5 LOWER KENT RIDGE ROAD, S(119074)	PROXIMITY CARD ACCESS, INTERCOM & CCTV SYSTEM
NATSTEEL ELECTRONICS PTE LTD	138 JOO SENG ROAD #07-00	OFFICE LOCK
NEC SINGAPORE PTE LTD	1 MARITIME SQUARE, #12-10, WORLD TRADE CENTRE, S(099253)	PROXIMITY CARD ACCESS SYSTEM
NEE SOON CAMP	CHONG KUO ROAD	SYRIS LONG RANGE CARPARK ACCESS SYSTEM
NEW TREND	BLK 12, LORONG BAKAR BATU, S(348745)	TIME CLOCK SYSTEM
NEW ZEALAND DEFENCE SUPPORT UNIT	SEMBAWANG PSA T2	CARD ACCESS SYSTEM
NGEE ANN POLYTECHNIC	535 CLEMEMTI ROAD S(599489)	BAR-CODE CARD ACCESS SYSTEM
NIPPON PAINT (SINGAPORE) CO PTE LTD	1 FIRST LOKE YANG ROAD, S(629728)	MAGNETIC CARD ACCESS SYSTEM
NITTAN AP (S) PTE LTD	6 BATTERY ROAD, #41-01	CARD ACCESS SYSTEM
NORDIC EUROPEAN CENTRE PTE LTD	8 INTERNATIONAL BUSINESS PARK, #03-23 NORDIC EUOPEAN CENTRE, S(609927)	SMARTAVS GUARD TOUR SYSTEM
NORTHOAKS EXECUTIVE CODOMINIUM	24 WOODLANDS CRESCENT, S(738083)	SMARTAVS GUARD TOUR SYSTEM
NTUC INCOME INSURANCE CO-OPERATIVE LTD	75 BRAS BASAH ROAD, NTUC INCOME CENTER	SMARTAVS GUARD TOUR SYSTEM
NUS-GRADUATED SCHOOL OF MEDICAL SCIENCE	MD5, LEVEL 3, NUS, MEDICAL DRIVE	CARD ACCESS SYSTEM
NUCLUS ELECTRONICS	41 KAKI BUKIT PLACE	CARD ACCESS SYSTEM
OCBC LTD	65 CHULIA STREET, OCBC CENTRE, S(049513)	PROXIMITY CARD ACCESS SYSTEM
OCBC PROPERTY SERVICES PTE LTD	1 PASIR RIS CENTRAL STREET 3, #B2-01, S(518457)	SMARTAVS GUARD TOUR SYSTEM
OCE SINGAPORE PTE LTD	190 MACPHERSON ROAD, #03-00	CARD ACCESS SYSTEM
OFFICE DIRECT PTE LTD	105 CECIL STREET, #06-03 THE OCTAGON, S(069534)	PROXIMITY CARD ACCESS SYSTEM
OLIVINE DISC MANUFACTURING	130 JOO SENG ROAD, #07-00, OLIVINE BUILDING, S(368357)	MAGNETIC CARD ACCESS SYSTEM
OMRON ASIA PACIFIC PTE LTD	83 CLEMENCEAU AVE, UE SQUARE #11-01, S(239920)	PROXIMITY CARD ACCESS SYSTEM

COMPANY	*LOCATION*	*SYSTEM*
OMRON SINGAPORE	SHELL TOWER	MAGNETIC CARD ACCESS SYSTEM
ONAN COURT APARTMENT	ONAN ROAD	SYRIS LONG RANGE CARPARK ACCESS SYSTEM
ONYX OIL PTE LTD	7 TEMASEK BOULEVARD, #27-02, SUNTAC TOWER 1, S(038987)	PROXIMITY CARD ACCESS SYSTEM
OOCL (S) PTE LTD	65 CHULIA STREET, #12-00 OCBC CENTRE, S(049513)	MAGNETIC CARD ACCESS SYSTEM
ORCHARD PARADE HOTEL	1 ORCHARD ROAD, S(238823)	SYRIS LONG RANGE CARPARK ACCESS SYSTEM
ORGA CARD SYSTEMS (SINGAPORE) PTE LTD	25 INTERNATIONAL BUSINESS PARK, #04-09/12 GERMAN CENTRE, S(609916)	PROXIMITY CARD ACCESS & ALARM SYSTEM
OUTOKUMPU (SEA) PTE LTD	10 ANSON ROAD, #11-19 INTERNATIONAL PLAZA, S(079903)	PROXIMITY CARD ACCESS SYSTEM
OXLEY RISE APARTMENT	OXLEY RISE	MAGNETIC CARD ACCESS SYSTEM
PATERSON TOWER (MCST 370)	8 PATERSON HILL, S(238567)	PROXMITY CARD ACCESS SYSTEM
PALM GARDEN CONDOMINIUM	CHOA CHUA KANG AVENUE	CRYPTAG LONG RANGE CARPARK ACCESS SYSTEM
PALM GREEN APARTMENT	481 PASIR PANJANG ROAD	SYRIS LONG RANGE CARPARK ACCESS SYSTEM
PALISADES APARTMENT	294 PASIR PANJANG ROAD, S(118635)	SYRIS LONG RANGE CARPARK ACCESS SYSTEM
PAN-PACIFIC CAPITAL HOLDINGS PTE LTD	10 SHENTON WAY, #13-07/09, HMS BUILDING, S(079117)	CARD ACCESS SYSTEM
PAN UNITED CONCRETE PTE LTD	9 TAMPINES INDUSTRIAL STREET 62, S(528815)	CARPARK BARRIER
PANTECH 21-COMPUTER CENTRE	PANDAN LOOP	ESOFNET INTEGRATED SECURITY SYSTEM
PARC OASIS CONDOMINIUM	55 JURONG EAST AVENUE 1	PROXIMITY CARD ACCESS, TURNSTILE & AVS GUARD TOUR SYSTEM
PARMIS PTE LTD	CITITECH INDUSTRIAL BUILDING	CARD ACCESS & BURGLAR ALARM SYSTEM
PBS PORTALS PTE LTD	180 CECIL STREET, #08-01 BANGKOK BANK BUILDING, S(069540)	PROXIMITY CARD ACCESS SYSTEM
PC HOLDINGS PTE LTD	43 CHANGI SOUTH AVENUE 2, S(486164)	PROXIMITY CARD ACCESS & TIME MANAGEMENT SYSTEM
PCF QUEENSTOWN SPARKLETOTS CHILDCARE CENTRE	BLK 46 COMMONWEALTH DRIVE, #01-289, S(142046)	PROXIMITY CARD ACCESS SYSTEM & INTERCOM SYSTEM
PEACE CENTRE	1 SOPHIA ROAD, PEACE CENTRE, S(228149)	CARD X-CSS, BURGLAR ALARM, CCTV, CARPARK X-CSS & BARRIER GATE
PEACH GARDEN	MEYER RD	CARD/LIFT X-CSS, A/V INTERCOM, CCTV, LONG RANGE PROX. CAR X-CSS SYS.
PEOPLE'S ASSOCIATION	9 STADIUM LINK	CONTACTLESS SMART CARD ACCESS & AVS GUARD TOUR SYSTEM

COMPANY	*LOCATION*	*SYSTEM*
PICO ART INT'L PTE LTD	20 KALLANG AVE, S(339411)	MAGNETIC CARD ACCESS SYSTEM
PIDEMCO	UDMC COSTA SAND RESORT	CARD ACCESS, AUDIO INTERCOM, CCTV & TURNSTILE GATE
PIDEMCO	BIANCO COURT	CCTV & BURGLAR ALARM SYSTEM
PIDEMCO	ALBERT COMPLEX	CCTV & BURGLAR ALARM SYSTEM
PIDEMCO	GOLDEN SHOE COMPLEX, 10TH FLOOR	CARD ACCESS SYSTEM
PIONEER MANAGEMENT	2 GOLDEN PLAZA, 21ST FLOOR	CARD ACCESS SYSTEM
POSBANK	BRAS BASAH RD	CARD ACCESS SYSTEM
POWEC PTE LTD	27 INTERNATIONAL BUSINESS PARK, #03-02	CARD ACCESS SYSTEM
PPL SHIPYARD	21 PANDAN ROAD	AVS GUARD TOUR SYSTEM
PRIME MINISTER'S OFFICE	14TH STOREY, TEMASEK TOWER	CARD ACCESS SYSTEM
PRIME MINISTER'S OFFICE (INFO. TECH.)	TREASURY BLDG	CARD ACCESS SYSTEM
PRIMEFIELD CO PTE LTD	27 INT'L BUSINESS PARK	ESOFNET INTEGRATED SECURIITY SYSTEM & CCTV SYSTEM
PROFIT CARD PTE LTD	1 SCOTTS ROAD, #21-10/13 SHAW CENTRE, S(228208)	MAGNETIC CARD ACCESS SYSTEM
PRUDENTIAL ASSURANCE	230 VICTORIA STREET, 11 STOREY, BUGIS JUNCTION TOWER, S(188024)	MAGNETIC CARD ACCESS SYSTEM
PRUDENTIAL ASSURANCE	30 CECIL STREET, #30-01, PRUDENTIAL TOWER, S(049712)	PROXIMITY CARD ACCESS WITH MODEM LINK
PRUDENTIAL ASSURANCE	10 EUNOS ROAD 8, 9 STOREY, SINGAPORE POST BUILDING, S(408600)	PROXIMITY CARD ACCESS WITH MODEM LINK
PRUDENTIAL ASSURANCE	111 SOMERSET ROAD, 4TH & 6TH STOREY, S(238164)	MAGNETIC CARD ACCESS SYSTEM
PRUDENTIAL ASSURANCE	51 CUPPAGE ROAD, #05-01, THE CYPPAGE,	PROXIMITY CARD ACCESS SYSTEM
PSA	CTED WORKSHOP	MAGNETIC CARD ACCESS SYSTEM
PSA	GATE 1 & 4	MAGNETIC CARD ACCESS SYSTEM
PSA	460 ALEXANDRA ROAD, 2ND, 4TH & 20ST STOREY, PSA BUILDING, S(119963)	MAGNETIC CARD ACCESS SYSTEM
PSA (HYDROGRAPHIC DEPARTMENT)	PULAU BRANI	MAGNETIC CARD ACCESS SYSTEM
PUBLIC SERVICES COMMISSION	3 ST ANDREW'S ROAD LEVEL 4, CITY HALL S(178958)	KEYPAD ACCESS SYSTEM
PWC BUILDING	8 CROSS STREET	INTEGRATED SECURITY SYSTEM WITH ALARM MONITORING
QUESTEK COMPONENTS INTERNATIONAL	18 TANNERY LANE, #05-01, LIAN TION BUILDING	PROXIMITY CARD ACCESS & ALARM SYSTEM
RADIANCE COMMUNICATION	1 SERANGOON NORTH AVE 5, #04-01, S(554915)	CONTACT SMART CARD ACCESS SYSTEM

COMPANY	*LOCATION*	*SYSTEM*
RAFFLES CHOICE FOOD & MANAGEMENT PTE LTD	5A ALIWAH STREET	PIN ACCESS SYSTEM
RAFFLES HOTEL	BEACH ROAD, #03-07, RAFFLES HOTEL	MAGNETIC CARD ACCESS SYSTEM
RAFFLES TRADE PRESS	1 SIMS LANE, #04-12, S(387355)	CARD ACCESS SYSTEM
RCS	CALDECOTT HILL	CARD ACCESS, AUDIO INTERCOM & CCTV SYSTEM
RDC HOLDINGS PTE LTD	50 ADMIRALTY ROAD WEST, S(759946)	CARD ACCESS SYSTEM
REEL SERVICES PTE LTD	CROCODILE HOUSE	CARD ACCESS SYSTEM
REGALIA CONDOMINIUM	2 RIVER VALLEY CLOSE, S(238428)	CRYPTAG LONG RANGE CARPARK ACCESS SYSTEM
REGENCY PARK CONDOMINUM	3-15 & 11A NOTHAN ROAD	SYRIS LONG RANGE CARPARK ACCESS SYSTEM
REPUBLIC PLAZA	MALACCA STREET	INTEGRATED SECURITY SYSTEM WITH ALARM MONITORING
RIKEI CORPORATION (S) PTE LTD	1 SIMS LANE, #04-06, S(387355)	KEYPAD ACCESS SYSTEM
RIVER OF LIVING WATERS CHURCH	315 OUTRAM ROAD, 310-02 TAN BOON LIAT BUILDING, S(169074)	PROXIMITY CARD ACCESS SYSTEM & INTERCOM SYSTEM
RIVERSHIRE CONDOMINIUM	31 LEONIE HILL, S(239229)	CARD X-CSS., TELE. ENT. INTERCOM, CCTV, LONG RANGE PROX. CAR X-CSS. SYS.
RIVERWOOD INT'L ASIA PTE LTD	101 THOMSON ROAD, #12-05, UNITED SQUARE, S(307591)	CARD ACCESS SYSTEM
ROBERTSON QUAY CONDOMINIUM	ROBERTSON QUAY	SYRIS LONG RANGE CARPARK ACCESS SYSTEM
ROOF PROPERTIES PTE LTD	BLK134, JURONG EAST STREET 13, #03-3071, S(600134)	PROXIMITY CARD ACCESS SYSTEM
ROTARY ENGINEERIN PTE LTD	17 TUAS AVENUE 20, S(638828	PROXIMITY CARD ACCESS SYSTEM
ROTARY IMC PTE LTD	61 JURONG ISLAND HIGHWAY	PROXIMITY CARD ACCESS SYSTEM & CARPARK BARRIER
ROXY SQUARE (MCST 1873)	50 EAST COAST RD #06-13 S(428769)	CARD ACCESS SYSTEM
ROYAL AUSTRALIAN NAVY - LIASON OFFICE	SEMBAWANG PSA T2 DEPTFORD ROAD	MAGNETIC CARD ACCESS SYSTEM
RVSI ASIA	230 VICTORIA STREET, #05-01, BUGIS JUNCTION TOWERS, S(188024)	KEYPAD ACCESS SYSTEM
S-ON SUPERMARKET	JURONG EAST	REMOTE SURVELLIANCE SYSTEM & ALARM SYSTEM
SAES GETTERS SINGAPORE PTE LDT	1 KIM SENG PROMENADE, #14-06 GREAT WORLD CITY, S(237994)	PROXIMITY CARD ACCESS SYSTEM
SAFRA BUKIT MERAH	5200 JALAN BUKITT MERAH, S(159468)	CARD ACCESS SYSTEM
SAFRA TAMPINES	1A TAMPINES ST 92	CARD ACCESS, CCTV & AVS GUARD TOUR SYSTEM
SAFRA TOA PAYOH	TOA PAYOH	CARD ACCESS SYSTEM
SAMCHUAN PTE LTD	BLK 1011 EUNOS AVE 6, #01-33, S(409623)	MAGNETIC CARD ACCESS SYSTEM

COMPANY	*LOCATION*	*SYSTEM*
SAMERO COMPANY PTE LTD	48 LOYANG WAY, S(508740)	BAR-CODE CARD ACCESS SYSTEM
SCAN-BILT PTE LTD	193B GOLDHILL CENTRE, THOMSON ROAD, S(307633)	PROXIMITY CARD ACCESS SYSTEM
SCDA ARCHITECH	10 TECH LIM ROAD	CARD ACCESS SYSTEM
SCHENKER S'PORE PTE LTD	2 CHANGI SOUTH AVENUE 1, S(486149)	CARD ACCESS, TIME CLOCK & LIFT ACCESS SYSTEM
SCHINDLER LIFTS (SINGAPORE) PTE LTD	1 KAKI BUKIT PLACE, S(416179)	PROXIMITY CARD ACCESS SYSTEM
SEAGATE TECHNOLOGY INT'L	700 ANG MO KIO AVENUE 5, S(569877)	ESOFNET INTEGRATED SECURITY SYSTEM (LIFT & CARD ACCESS)
SEAGATE TECHNOLOGY INT'L	16 WOODLANDS LOOP, S(738340)	ESOFNET INTEGRATED SECURITY SYSTEM
SEASON PARK CONDOMINIUM		SYRIS LONG RANGE CARPARK ACCESS SYSTEM
SEATOWN COPORATION LTD	#13-07/09 MAS BUILDING	PROXIMITY CARD ACCESS SYSTEM
SEMA GROUP ASIA PACIFIC PTE LTD	111 SOMERSET ROAD, #09-06, S(238164)	MAGNETIC CARD ACCESS SYSTEM
SENG KEE BUILDING	MARTIN RD	COLOUR CCTV, PROX. CARD X-CSS, PA, INTERCOM & BURGLAR ALARM SYS.
SERAYA CHEMICALS	3RD STOREY, CPF JURONG EAST BLDG.	CARD ACCESS & BURGLAR ALARM SYSTEM
SHAW PLAZA TWIN HEIGHTS	350 BALESTIER ROAD, S(329779)	SYRIS LONG RANGE CARPARK ACCESS SYSTEM
SHELL SERAYA RESEARCH LABORATORY	SHELL HOUSE, 83 CLEMENCEAU AVE S(239920)	CARD ACCESS SYSTEM
SHELL EASTERN PETROLEUM (PTE) LTD	PULAU BUKOM P.O. BOX 1908	PROXIMITY CARD ACCESS SYSTEM
SIANG HOE INT'L GROUP PTE LTD	BLK 219 HENDERSON ROAD, #06-02, HENDERSON IND. PK., S(159556)	CARD ACCESS SYSTEM
SIM COMMUNICATION	SBC CALDECOTT HILL	MAGNETIC CARD ACCESS SYSTEM
SIM COMMUNICATION	298 TION BAHRU ROAD, #07-01, TIONG BAHRU PLAZA, S(168730)	MAGNETIC CARD ACCESS SYSTEM
SIM COMMUNICATION	BUKIT BATOK SATELITE STATION	MAGNETIC CARD ACCESS SYSTEM
SIME INFORMATION SERVICES	896 DUNEARD ROAD, #03-06A	CARD ACCESS SYSTEM
SINGAOPORE NATIONAL EMPLOYEE FEDERATION	TANGLIN SHOPPING CENTRE #10-01 & #07-01	PROXIMITY CARD ACCESS SYSTEM
SINGAPORE POLYMER CORP. (PTE) LTD	41 SHIPYARD ROAD	REMOTE SURVELLIANCE SYSTEM & AVS GUARD TOUR SYSTEM
SINGAPORE POST	EUNOS RD	PIN ACCESS CONTROL SYSTEM

COMPANY	*LOCATION*	*SYSTEM*
SINGTEL AERADIO PTE LTD	1 SERANGOON NORTH AVENUE 5	PROXIMITY CARD ACCESS SYSTEM
SING INDUSTRIAL COMPLEX	ANG MO KIO IND PARK 2	LONG RANGE PROXIMITY CARPARK SYSTEM
SMATRA ENGINEERING PTE LTD	BLK 1 #06-03 AMK INDUSTRAIL PARK 2A, S(568049)	PIN ACCESS SYSTEM
SNR SYSTEM PTE LTD	BLK 105 BOON KENG ROAD, #02-01/03 KALANG BSIN INDUSTRIAL ESTATE, S(339776)	PROXIMITY CARD ACCESS SYSTEM
SOCIAL DEVELOPMENT SERVICES	277 RIVER VALLEY ROAD, STARDUS, S(238318)	SMARTAVS GUARD TOUR SYSTEM
SOI YONG BLDG	100 LOR 23 GEYLANG, S(388398)	CARD ACCESS SYSTEM
SONY LOGOSTIC	13 TUAS AVENUE	CARD ACCESS SYSTEM
SOONER TECHNOLOGY	5TH STOREY, CITITECH BLDG	CARD ACCESS SYSTEM
SOUTHLAND INVESTMENT (PTE) LTD	101 THOMSON ROAD, #09-03A, UNITED SQUARE, S(307591)	KEYPAD ACCESS & AUDIO INTERCOM SYSTEM
SPECIALTY ELECTRONICS	BLK 514, CHAI CHEE LANE, #02-05/06	CARD ACCESS SYSTEM
S'PORE HEART CENTRE	HOSPITAL 3RD AVENUE	MAGNETIC CARD ACCESS & BURHLAR ALARM SYSTEM
S'PORE POLYTECHNIC	500 DOVER RD, S(139651)	CARD ACCESS, MINI FEP & GUARD TOUR SYSTEM
S'PORE POST	10 EUNOS ROAD 8, SINGAPORE POST CENTRE, S(408600)	
S'PORE POWER	PUB BLDG	CARD ACCESS SYSTEM
S'PORE POWER (COLD SITE)	AYER RAJAH CRESENT	CARD ACCESS SYSTEM
S'PORE POWER (DOCUMENT ROOM)	PUB BLDG	CARD ACCESS SYSTEM
S'PORE POWER (LOGISTIC DIVISION)	PUB BLDG #15-05	LIFT ACCESS SYSTEM
S'PORE PRESS HOLDING	TOA PAYOH NORTH	CRYPTAG LONG RANGE CARPARK ACCESS SYSTEM
S'PORE SHIPBUILDING & ENGRG	7 BENOI RD, S(629882)	CARD ACCESS SYSTEM
S'PORE TELECOM	COMCENTRE 1	LIFT ACCESS SYSTEM
S'PORE TELECOMMUNICATIONS	1 SERANGOON NORTH AVENUE 5	CONTACT SMART CARD ACCESS SYSTEM
SSANGYONG CEMENT	PIONEER CRESENT	CARD ACCESS & TIME CLOCK SYSTEM
ST ADVANCE RADIOPTE LTD	24 ANG MI KIO STREET 65, 6TH FLOOR (EAST WING)	CARD ACCESS SYSTEM
ST AGILIS COMM TECHNOLOGIES PTE LTD	100 JURONG EAST ST 22 LEVEL 4	MAGNETIC CARD ACCESS SYSTEM
ST ASSEMBLY TEST SERVICES LTD	5 YISHUN ST 23, S(768442)	PROXIMITY CARD ACCESS & FLAP BARRIER SYSTEM
STOLT SEA FARM PTE LTD	20 HARBOUR DRIVE, #05-02 PSA VISTA	PROXIMITY CARD ACCESS SYSTEM
SULTAN PLAZA	100 JALAN SULTAN	CRYPTAG LONG RANGE CARPARK ACCESS SYSTEM

COMPANY	*LOCATION*	*SYSTEM*
SUMITOMO BAKELITE (S) PTE LTD	1 SENOKO SOUTH	AVS GUARD TOUR SYSTEM
SUMMIT COMPANY (SINGAPORE) PTE LTD	10 PANDAN CRESCENT, #02-05, S(128466)	MAGNETIC SWIPE ACCESS SYSTEM
SUN & SUN PTE LTD	3 SHENTON WAY, #15-04 SHENTON HOUSE, S(068805)	PROXIMITY CARD ACCESS SYSTEM
SUN PLAZA	30 SEMBAWANG DRIVE, #01-49, S(757713)	SMARTAVS GUARD TOUR SYSTEM
SUNTEC CITY	1 RAFFLES BOULEVARD, S(039593)	ESOF-GATE INTEGRATED SECURITY SYS. & SYRIS LONG RANGE PROX. CAR X-CSS SYS.
SUNNY SPRING CONDOMINIUM	LORONG 40, GEYLANG	SYRIS LONG RANGE CARPARK ACCESS SYSTEM
SUPERWORLD ELECTRONIC	54 KALLANG BAHRU, #05-17/18, KALLANG BASIN IND. EST., S(339336)	CARD ACCESS SYSTEM
SWITZERLAND EMBASSY	SWISS CLUB LINK	CARD ACCESS SYSTEM
TAMPINES PLAZA	TAMPINES CENTRAL 6	SYRIS LONG RANGE CARPARK ACCESS SYSTEM
TAN CHONG & SON MOTOR	TAN CHONG MOTOR CENTRE (BT TIMAH RD)	CCTV, AUDIO INTERCOM & BARRIER GATE SYSTEM
TANG PLAZA	320 ORCHARD ROAD, S(238865)	SYRIS LONG RANGE CARPARK ACCESS SYSTEM
TANGLIN CONSTITUENCY SECRETARY	245 WHITLEY ROAD, S(297829)	CARD ACCESS SYSTEM
TANKER PACIFIC	38TH FLOOR, MILLENIA TOWER	CARD ACCESS SYSTEM & REMOTE SURVEILLANCE SYSTEM
TAT ANN BLDG	JALAN PEMIMPIN	COLOUR CCTV SYSTEM
TCS	CALDECOTT BROADCAST CENTRE	INTEGRATED SYSTEM FEP CARD ACCESS & ALARM MONITORING SYSTEM
TELECOM EQUIPMENTS	1 SERANGOON NORTH AVE 5, #05-01, S(554915)	CARD X-CSS, ALARM MONITING & AVS GUARD TOUR SYSTEM
THE AMERICAN CLUB	21 SCOTTS ROAD, S(228219)	MAGNETIC CARD ACCESS SYSTEM
THE ANCHORAGE (MCST 2304)	370J ALEXANDRA ROAD, S(159962)	SMARTAVS GUARD TOUR SYSTEM
THE ASCOTT GROUP LIMITED	6 SCOTTS ROAD, SCOTTS SHOPPING CENTRE, S(228209)	SMARTAVS GUARD TOUR SYSTEM
THE EDGE PUBLISHING PTE LTD	150 CECIL STREET, #13-00, S(069543)	PROXIMITY CARD ACCESS SYSTEM
THE HEEREN	ORCHARD ROAD	LIFT ACCESS SYSTEM
THE MALAYAN REFRIGERATING CO PTE LTD	232 PANDAN LOOP, S(128241)	CARD ACCESS SYSTEM
THE QUAYSIDE	60 ROBINSON QUAY	CARD ACCESS, LIFT ACCESS & CARPARK ACCESS SYSTEM
THE SALVATION ARMY	BLK 610 ANG MO KIO AVE	CARD ACCESS SYSTEM
THONGSIA BUILDING	30 BIDEFORD ROAD	CRYPTAG LONG RANGE CARPARK ACCESS SYSTEM

COMPANY	*LOCATION*	*SYSTEM*
THYSSEN (S) PTE LTD	29 INTERNATIONAL BUSINESS PARK #04-05 ACER BUILDING TOWER B	PROXIMITY CARD ACCESS SYSTEM
TIARA CONDOMINIUM	KIM SENG WALK	SYRIS LONG RANGE CARPARK ACCESS SYSTEM
TID ASSOCIATES PTE LTD	170 BUKIT TIMAH ROAD	LIFT ACCESS SYSTEM
TIMES PRINTERS PTE LTD	16 TUAS AVENUE 5	AVS GUARD TOUR SYSTEM
TOA PAYOH HOSPITAL (CLUB HOUSE)	TOA PAYOH HOSPITAL	CARD ACCESS SYSTEM
TOTO LIMITED, SINGAPORE BRANCH	221 HENDERSON ROAD, #08-13 HENDERSON INDUSTRIAL BUILDING, S(169557)	PIN ACCESS SYSTEM & INTERCOM SYSTEM
TRACTORS SINGAPORE	26 BENOI SECTOR	PROXIMITY CARD ACCESS SYSTEM
TREETOPS EXECUTIVE RESIDENCES SINGAPORE	7 ORANGE GROVE ROAD, S(258355)	TIME MANAGEMENT SYSTEM
TRENDISC TECHNOLOGY PTE LTD	24 KIAN TECK DRIVE, S(628841)	PIN ACCESS SYSTEM & INTERCOM SYSTEM
TRELLIS TOWER	LORONG 1 TOA PAYOH	PROX. CARD X-CESS & SYRIS LONG RANGE CARPARK X-CESS SYSTEM
TREVOUS PARK CONDOMINIUM	26-30 TREVOUS PARK CRESCENT	CRYPTAG LONG RANGE CARPARK ACCESS SYSTEM
TSANG & ONG STOCKBROKER	80 ROBINSON RD, S(068898)	CARD ACCESS & TIME CLOCK SYSTEM
UFE PTE LTD	5 JOO KOON WAY, S(628944)	CARD ACCESS SYSTEM
ULU PANDAN COMMUNITY CENTRE	170 GHIM MOH ROAD	PROX. CARD X-CESS & AVS GUARD TOUR SYSTEM
UOB TIONG BAHRU PLAZA	298 TION BAHRU ROAD, 11TH STY, TIONG BAHRU PLAZA, S(168730)	INTEGRATED SYSTEM MINI FEP CARD ACCESS WITH MODEM LINK
UOL	101 THOMSON ROAD, 32ND & 33RD STY, UNITED SQUARE, S(037591)	CARD ACCESS SYSTEM & SMARTAVS GUARD TOUR SYSTEM
URA	10TH FLOOR, MARKET STREET	CARD ACCESS SYSTEM
VICCARD PTE LTD	105 BOON KENG RD #05-11/16	CARD ACCESS & BURGLAR ALARM SYSTEM
VENTURE MFG. (S) LTD	5006 ANG MI KIO AVENUE 5	AVS GUARD TOUR SYSTEM
WEE SWEE TEOW & CO	65 CHULIA STREET, #27-00 OCBC CENTRE, S(049513)	PROXIMITY CARD ACCESS SYSTEM & INTERCOM SYSTEM
WATERFRONT VIEW CONDOMINIUM	BLK 726 - BLK 738 BEDOK RESERVIOR ROAD	CRYPTAG LONG RANGE CARPARK ACCESS SYSTEM
WHITE BOX COMPUTER PTE LTD	27 INTERNATIONAL BUSINESS PARK	CARD ACCESS, CCTV & BURGLAR ALARM SYSTEM
WHITE SANDS SHOPPING CENTER	1 PASIR RIS CENTRAL STREET 3	AVS GUARD TOUR

COMPANY	*LOCATION*	*SYSTEM*
WILKIE APARTMENT	48 WILKIE ROAD, S(228059)	PROXIMITY CARD ACCESS, LIFT ACCESS & AUDIO INTERCOM SYSTEM
WOODBRIDGE HOSPITAL	10 BUANGKOK GREEN, S(539747)	CCTV SYSTEM
WOODLAND POLYCLINIC	WOODLAND STREET 31	CRYPTAG LONG RANGE CARPARK ACCESS SYSTEM
WORLD TRADE CENTRE	1 MARITIME SQUARE, S(099253)	SYRIS LONG RANGE CARPARK ACCESS SYSTEM
WORLD STANDARD LTD	5TH FLOOR, MARKET STREET	CARD ACCESS SYSTEM
YOONLY ENTERPRISE PTE LTD	105 BOON KENG RD, #06-08/09, KALLANG BASIN IND. EST., S(339776)	BURGLAR ALARM SYSTEM
YUE XIU HOLDINGS (SEA) PTE LTD	20 MALACCA ST, #16-00, S(048979)	CARD ACCESS SYSTEM
ZEITO TECHNOLOGIES PTE LTD	BLOCK 3 ANG MO KIO INDUSTRIAL PARK 2A, #05-08 TECH 1, S(568050)	PROXIMITY CARD ACCESS, ALARM SYSTEM & CCTV SYSTEM
50'S ENTERTAINMENT	TANJONG PAGAR ROAD	TIME CLOCK SYSTEM

ELID TECHNOLOGY INTERNATIONAL PTE LTD

Blk 105 Boon Keng Road #06-10 Kallang Basin Industrial Estate
Singapore 339776 • Email : elids@singnet.com.sg
Tel : (65) 295 2218 • Fax : (65) 295 2282

Cert. No: QSP00129

CRYPTAG LONG RANGE PROXIMITY SYSTEM

S/NO	DEVELOPMENT/PROJECT NAME	ADDRESS	NO. OF SYSTEM
1	Sophia 98	106 Sophia Road	1 In
2	19 Shelford	19 Shelford Road	1 In
3	Ang Mo Kio Tech II (*)	Blk 5 Ang Mo Kio Industrial Park 2A	2 In, 3 Out
4	Bestway Building	12 Prince Edward Road	2 In, 1 Out
5	Casa Rosa Condominium	Lorong How Sun Road	1 In
6	Chancelodge Place	105 Sims Road	1 In, 2 Out
7	China Town Plaza (MCST: 1033)	Craig Road	1 In
8	Corporation Place (*)	No. 2 Corporation Road	2 In, 2 Out
9	East Gate	46 East Coast Road	2 In, 2 Out
10	Geylang Neighbourhood Police Centre	Paya Lebar Road	1 In
11	GMTI Building	6 Commonwealth Lane	2 In, 1 Out
12	Henry Park	Holland Grove	1 In
13	JTC IBM Changi (*)	Changi Business Park	2 In, 2 Out
14	JTC Block 1004 (*)	Toa Payoh North	1 In, 1 Out
15	JTC Block 171 (*)	Blk 171 Kallang Way	1 In, 1 Out
16	JTC Bendemeer Road (*)	996, 998 Bendemeer Road	1 In, 1 Out
17	JTC Kallang Place Block 7, 9, 26 (*)	Kallang Place	3 In, 3 Out
18	Kampong Bugis	Kampong Bugis Road	1 In
19	Kings Mansion	12 Amber Garden	3 In, 3 Out
20	Martia 8	8 Martia Road	1 In
21	Moonstone Apartment	Moonstone Lane	1 In
22	National Oxygen Pte Ltd	21 Tanjong Kling Road	1 In
23	Orchid Bel'Air Condominium	Orchard Road	1 In
24	Orchid Condominium	Yishun Ave 1	1 In, 1 Out
25	OSIM Building	65 Ubi Ave 1	1 In
26	Palm Garden Condominium	Choa Chu Kang Avenue	3 In
27	Regalia Condominium	2 River Valley Close	1 In, 1 Out
28	Singapore Conference Hall (*)	Shenton Way	2 In, 2 Out
29	Singapore Press Holdings	Toa Payoh North	1 In, 1 Out
30	Skytech Industrial Building (*)	Bukit Batok Street 24	2 In, 3 Out
31	Trevose Park Condominium	26 Trevose Crescent	1 In, 1 Out
32	The Aston	2 Kay Poh Road	2 In
33	Thongsia Building	30 Bideford Road	1 In, 1 Out
34	Waterfront View	Blk 726 ~ Blk 738 Bedok Reservoir Road	2 In
35	Woodlands Polyclinic	Woodlands Street 31	1 In
36	Woodgrove Condominium	4 Woodgrove Drive	1 In

On-going Project:

1	Behid IBM Changi Business Park	Changi Business Park	1 In, 1 Out

(*) Integrated to Cashcard Carpark System

ELID TECHNOLOGY
INTERNATIONAL PTE LTD
Blk 105 Boon Keng Road #06-10 Kallang Basin Industrial Estate
Singapore 339776 · Email : elids@singnet.com.sg
Tel : (65) 295 2218 · Fax (65) 295 2282

Cert. No. QSP00129

CUSTOMER REFERENCE LIST – SMARTAVS ELECTRONIC GUARD TOUR

Givaudan Roure Pte Ltd	1 Woodlands Avenue 8
Hiap Seng Engineering Ltd	4 Benoi Place
Sumitomo Bakelite (S) Pte Ltd	1 Senoko South
Venture Mfg (S) Ltd	5006 Ang Mo Kio Avenue 5
Mera Saga Condominium	Holland Village
Merawood Condominium	136 Hillview Avenue
Parc Oasis Condominium	55 Jurong East Avenue 1
Eastpoint Green Condominium	Simei Street 3
Liang Court	177 River Valley Road
PPL Shipyard	21 Pandan Road
Safra Tampines	1/A Tampines Street 92
Telecom Equipment	1 Serangoon North Ave 5
Times Printers Pte Ltd	16 Tuas Avenue 5
Singapore Management University	
Hong Leong Holding	16 Raffles Quay
HDB Estate	Blk 104-107 Jln Bukit Merah
White Sands Shopping Centre	1 Pasir Ris Central Street 3
Chevron Oronite Pte Ltd	21 Sakra Road, Jurong Island
NTUC Income Insurance Co-operative Ltd	75 Bras Basah Road
Ulu Pandan Community Centre	170 Ghim Moh Road
United Square Building	101 Thomson Road
People's Association (SDS)	277 River Valley Road
Anchorage Condominium	370J Alexandra Road
Scotts Shopping Centre	6 Scotts Road
Nordic European Centre	8 In't Business Pk
Northoaks Executive Condominium	24 Woodlands Crescent
Marine Parade Community Building	278 Marine Parade Road