Gas Installation Practices & Design Criteria, Procedures & Requirements for Submission of Installation Plans, Pipe Work Installation, Pressure Test & Charge-in of Gas Supply

Lecture 4 (Tuesday, 19th August 2003)

By

Mr Ng Kee San

PROCEDURES FOR OBTAINING GAS SUPPLIES FOR PREMISES WITHOUT EXISTING GAS SERVICE

1 ENQUIRY FOR GAS SUPPLY

All enquiries for gas supply can be made to the Marketing Manager, PowerGas Ltd., 111 Somerset Road #10-05 Singapore 238164.

In making the enquiry, the following information should be provided :-

(a) Detailed building plan.

(b) Site plan.

(c) Phasing of the development.

(d) Target date for completion.

(e) Anticipated load for the project.

2 PRE-SUBMISSION CONSULTATION

If gas supply to the development is feasible, the developer's Professional Engineer (PE) or Licensed Gas Service Worker (LGSW) may call on the Marketing Manager for a pre-submission consultation on the gas installation proposal.

At the pre-submission consultation meeting, the following will be discussed :-

(a) Gas service pipe route.

(b) Gas risers and meters position.

(c) Load requirements.

(d) Safety requirements.

(e) Target date for completion.

3 APPLICATION FOR SUPPLY OF GAS AND APPROVAL OF GAS INSTALLATION PLAN

POWERGAS FORM G1

The PE/LGSW will submit to the Marketing Manager, PowerGas, an application for the supply of gas on POWERGAS FORM G1.

The application shall be accompanied by :-

(a) 2 sets of site plan and floor plan with the proposed gas pipe route.

(b) Load requirements/design calculations.

The PE/LGSW must endorse on the plans that the submission complies with the relevant rules, regulations, codes of practice and PowerGas procedures and requirements for gas supply.

PowerGas Ref No: _____

APPLICATION FOR THE SUPPLY OF GAS

Date: _____

To: Managing Director
PowerGas Ltd
Attn: _____

GAS SUPPLY TO _____
(Address of Premises/Development)

I/I on behalf of the owner, wish to apply for the following:-

☐ For the supply of gas and approval of gas installation plan

☐ Addition and alteration work to existing gas installation
(Please tick the appropriate box)

I hereby submit the proposal for gas pipe installation/addition and alteration work as shown in the attached plans for approval.

My designated representative to liaise with PowerGas on all gas matters is:-

Name: _____ Tel No: _____

PE No./LGSW No: _____

c/o Address: _____

The expected date of Gas Supply turn-on is: _____

Name of Developer/Owner: _____

Address: _____

Name of Professional Engineer: _____

Address: _____

Name of Architect: _____

Address: _____

Submitted by: _____
Owner/PE/LGSW

Signature: _____

Address: _____

Tel No: _____

(Please see overleaf on **Notes**)

FORM G1

(04/98)

NOTE:

a The 'designated representative' must be a licensed gas service worker or a Professional Engineer.

b Where there is a Professional Engineer and a licensed gas service worker on a project, the designated representative should be the Professional Engineer and in the event that the Professional Engineer wishes to delegate this responsibility to the licensed gas service worker, PowerGas should be informed in writing.

c In a project where gas has been charge-in/turn-on and where there is a Professional Engineer responsible for the gas installation, his prior consent in writing must be obtained and submitted together with this application. In all other cases, the prior consent of the owner in writing must be obtained and submitted together with this application.

4 APPROVAL OF PLANS

POWERGAS FORM GR1

The approving authority in PowerGas is the Manager (Plan Approval), PowerGas Ltd.

All plans submitted by the PE/LGSW will be checked for compliance with CP51 and PowerGas procedures and requirements for gas supply. Any non-compliance will be conveyed to the PE/LGSW for amendment, update and re-submission.

Upon approval of the submission, the Marketing Manager will write to inform the applicant of the approval on POWERGAS FORM GR1.

Our Ref :
Your Ref:
Tel :
Fax : 8318699

Date: _____

To: _____

_____

_____

Our Project Co-ordinator is
Mr _____
Tel: _____
Pager: _____

Dear Sir

APPROVAL FOR SUPPLY OF GAS AND GAS INSTALLATION TO_____

_____

We refer to your application dated _____ and wish to inform you that the approval of the following has been given:-

a the supply of gas to the abovementioned project; and
b the gas pipe layout design as shown in Drawing No. _____

_____

2 All gas service work must be in accordance with the Code of Practice for Manufactured Gas Pipe Installation, Singapore Standard, CP51, the Procedures and Requirements for Gas Supply and all relevant acts, regulations and rules. Your designated representative is required to contact our Project Co-ordinator for a site meeting before commencement of work.

3 If your designated representative requires further information/clarification, please contact Mr _____ at Tel No. _____.

Yours faithfully

for SENIOR MANAGER
CUSTOMER SUPPLY DIVISION
POWERGAS LTD

cc 1) Developer/Owner
2) Professional Engineer/LGSW/Architect/DR

Note: 1) Please quote our Ref No. in all future application/correspondence.
2) Manager (Plan Approval) is the Approving Authority for all gas installation plans

FORM GR/1
(04/98)

Project File: _____

Project Name : _____

_____

_____

Written Comments: Date : _____

No	Description	Drawing No.

Meeting attended by : _____

☐ Pre-submission consultation

☐ Plans amended & submitted for Approval

☐ Plans returned to Consultant/LGSW for re-submission

_____ _____

Name & Signature Manager (Plan Approval)

FORM GR/1X

(04/98)

5 QUOTATION/PAYMENT

Marketing Manager will send a quotation to the owner/developer for the extension and connection of gas main to the development.

6 DESIGNATED REPRESENTATIVE AND PROJECT CO-ORDINATOR

The owner/developer shall appoint a Designated Representative who will liaise with the PowerGas project co-ordinator on all matters relating to the gas installation.

The Designated Representative shall be a Professional M & E Engineer (PE) or a Licensed Gas Service Worker (LGSW).

Where there is PE and a LGSW on a project, the PE shall be the Designated Representative and in the event that the PE wishes to delegate this responsibility to the LGSW, he should formally notify the PowerGas in writing.

7 SITE MEETING BEFORE COMMENCEMENT OF WORK

Before commencement of work on the gas installation, the Designated Representative shall arrange with the PowerGas project co-ordinator, PC, for a site meeting.

At the site meeting, the Designated Representative shall inform the PC the date for commencement of the work.

8 PIPEWORK

The gas installation within the property boundary shall be carried out in accordance with the plans approved by PowerGas.

The Designated Representative shall supervise the work and ensure that it is carried out in accordance with the following requirements :-

(i) The approved plans;

(ii) Code of Practice for Manufactured Gas Pipe Installation CP51;

(iii) PowerGas Procedures and Requirements for Gas Supply.

8.1 DEVIATION

A re-submission of plan for approval is necessary for any deviation except for the following :-

(a) **Where the routing of the service pipe and/or the internal pipe and/or the outlet points are within the confines of an eating house, a canteen, a food court, a residential unit or the kitchen of a commercial installation deviates from the approved plan;**

(b) **Where there is a slight deviation of the service/internal pipe route or service tap-off point or the entry location to the building so as to overcome site constraint.**

The PE/LGSW shall ensure that the deviations comply with CP51 and the PowerGas procedures and requirements for gas supply. The deviations shall be reflected in the as-built plan upon completion of the installation.

Our Ref :
Your Ref:
Tel :
Fax : 8318699

Date: _____

To: _____

_____

_____

Our Project Co-ordinator is
Mr _____
Tel: _____
Pager: _____

Dear Sir

APPROVAL OF AMENDMENT PLANS FOR GAS SUPPLY TO_____

_____
(Address of premises/development)

We refer to your application dated _____ and wish to inform you that approval has been given for the amendment plans as shown in Drawing No(s):_____.

2 If your designated representive requires further information/clarification, please contact the undersigned at Tel No. _____.

Yours faithfully

for SENIOR MANAGER
CUSTOMER SUPPLY DIVISION
POWERGAS LTD

cc 1) Designated Representative/Professional Engineer/LGSW
2) Developer/Owner/Architect

FORM GR/1A
(04/98)

9 APPLICATION FOR FINAL PRESSURE TEST

POWERGAS FORM G2

The application for final pressure test, POWERGAS FORM G2, must be accompanied by 2 sets of As-Built drawings inclusive of schematic diagram and 1 set of As-Built (with Amendments) drawings where there are minor variations to the approved pipe routes.

PowerGas Ref No: _____

To : Managing Director
PowerGas Ltd

Attn: _____
(PowerGas' Project Co-ordinator)

APPLICATION FOR FINAL PRESSURE TEST OF GAS INSTALLATION AT

_____
(Address of Premises/Development)

PART I

I, hereby, submit my application for testing of the following gas installation work : ,
(Please tick the appropriate boxes)

❑ External and internal gas service pipe ❑ Internal gas pipe

The abovementioned work was carried out by our appointed LGSW. The as-built drawing (inclusive of line diagram) is attached.

I confirm that the work has been carried out in accordance with the Public Utilities Act (Cap. 261, 1996 Ed), Public Utilities (Gas Supply) Regulations 1997, the Code of Practice for Manufactured Gas Piped Installation, Singapore Standard, CP51, the Procedures and Requirements for Gas Supply and all relevant acts, regulations and rules.

I will notify all parties of the date for final pressure test.

Name of Designated Representative : _____

Signature : _____ Date: _____

I certify that the gas pipe installation for the above project has been completed and is in accordance with the Public Utilities Act (Cap. 261, 1996 Ed), Public Utilities (Gas Supply) Regulations 1997, the Code of Practice for Manufactured Gas Piped Installation, Singapore Standard, CP51, the Procedures and Requirements for Gas Supply and all relevant acts, regulations and rules, and is ready for the final pressure test.

Name of Professional Engineer: _____

Signature : _____ Date: _____

PART II (This section is applicable only for minor addition and alteration work on existing gas installation)

I also request that gas be turn-on to the installation upon successful completion of the final pressure test. After turn-on of the gas supply, I will inform all relevant parties accordingly not to tamper with the gas installation.

_____ _____
Signature of Designated Representative Date

---

cc (1) Developer/Owner
(2) Professional Engineer
(3) Architect
(4) Main Contractor

(Please see overleaf on Notes)

NOTES:

a) The applicant shall be the Designated Representative.

b) The Designated Representative must attend the final inspection and final pressure test.

c) Final pressure test and turn-on of gas supply will be carried out in one operation for the following minor addition and alteration work on existing gas installations:

1 Turn-on of single/multi stall after charge-up to food court/eating house/canteen.

2 Replacement/addition/relocation of appliances, inclusive of minor pipe extensions.

3 Renewal of corroded gas pipes.

4 Installation of valves.

5 Termination/cap-off of gas pipes.

6 Diversion/alteration/addition of existing service pipes in void deck or ground floor of residential premises.

10 FINAL PRESSURE TEST

POWERGAS FORM GR2

POWERGAS FORM G2A

Upon approval of the application for final pressure test, PowerGas will inform the Designated Representative, the date and time of the test, POWERGAS FORM GR2.

When the installation has passed the final pressure test, a test certificate POWERGAS FORM G2A, shall be issued by the Designated Representative and endorsed by the PowerGas project co-ordinator.

In the event that the installation has failed the final pressure test, the Designated Representative must rectify the fault, retest and re-submit a fresh application for final pressure test.

After the gas installation has been tested and passed, the Designated representative must affix all plugs, caps and other end points of the installation with warning labels which read "Gas Pipe Tested. Do not Tamper".

Any further work on the installation, will render the final pressure test null and void.

If any further work has to be carried out, a new application for the work shall be made together with the plans.

Our Ref :
Your Ref :
Tel :
Fax : 8318699

To: _____

_____

_____

Our Project Co-ordinator is
Mr _____
Tel: _____
Pager: _____

Dear Sir

APPROVAL FOR FINAL PRESSURE TEST AT _____

_____

We are pleased to inform that your application for final pressure test dated _____ for gas supply has been approved.

2 The test will be carried out on _____ at _____.

3 As the designated representative, you are required to be present. You are also required to notify all parties of the date and time for the final pressure test.

Yours faithfully

for SENIOR MANAGER
CUSTOMER SUPPLY DIVISION
POWERGAS LTD

cc 1) Owner/Developer
2) PE/LGSW/Architect

FORM GR/2
(04/98)

PowerGas Ref No:_____

To: Managing Director
PowerGas Ltd

Attn: _____
(Name of PowerGas' Project Co-ordinator)

CERTIFICATE OF FINAL PRESSURE TEST

LOCATION: _____

ADDRESS:_____

AS-BUILT PLAN NOS:_____

---

(1) This is to certify that the gas installation has passed the final pressure test on _____. No person shall be allowed to carry out any further work on the installation without prior written approval from PowerGas.

Certified by: _____
(Designated Representative)

PE No./LGSW No: _____

Date: _____

Approved by: _____
(PowerGas' Project Co-ordinator)

Date: _____

cc 1) Architect
2) Owner/Developer
3) Professional Engineer
4) Main Contractor

11 FORMAL REQUEST FOR CHARGE-IN

POWERGAS FORM G3

After the gas installation has passed the final pressure test, the 'Designated representative' must formally notify the PowerGas in writing that the site is ready to receive gas and submit a formal request for charge-in, POWERGAS FORM G3.

PowerGas Ref No :_____

To : Managing Director
PowerGas Ltd.

Attn : _____
(PowerGas' Project Co-ordinator)

REQUEST FOR CHARGE-IN/TURN-ON OF GAS TO _____

_____
(Address of premises/development)

As-Built Plan Nos : _____

1. I certify that the site is ready to receive gas. I further certify that the gas installation has passed the final pressure test , no further work has been carried out on the gas installation after the final pressure test and is safe for CHARGE-IN/TURN-ON.

2. After charge-in/turn-on of the gas supply to the above project, I will inform all relevant parties accordingly not to tamper with the gas installation. I also undertake to affix warning labels at all end-points of the gas pipe installation.

3. I attach a copy of the line drawing of the installation covered under this application. A copy of the line diagram has been given to the owner for display.

4. The number of end-points in the gas pipe installation is _____ .

_____ _____
Signature of Designated Representative Date

PE No/LGSW No : _____

Name _____

Address :_____

Tel No : _____

Note : 1) In the case of a designated representative who has been nominated by the Professional Engineeer, he should only be allowed to submit this application with the consent of the main contractor and the Professional Engineer.

CONSENT BY PROFESSIONAL ENGINEER AND MAIN CONTRACTOR/OWNER
(where applicable)

We consent to the above application.

Name of Professional Engineer/Owner : _____ Signature :_____

PE No : _____ Date : _____

Name of authorised person on behalf of Main Contractor : _____
(with company stamp)

Signature : _____ Date : _____

12 CHARGE-IN OF GAS

POWERGAS FORM GR3

POWERGAS FORM GR4

PowerGas will notify the Designated Representative in writing the approval and date of charge-in, POWERGAS FORM GR3.

When the charge-in is completed, the Designated Representative shall sign a statement of turn-on, Form GR4, and notify all relevant parties that gas has been turn-on/charge-in to the stated premises.

Our Ref :
Your Ref :
Tel :
Fax : 8318699

To: _____

_____

_____

Our Project Co-ordinator is
Mr _____
Tel: _____
Pager: _____

Dear Sir

APPROVAL FOR CHARGE-IN/TURN-ON AT _____

_____

We refer to your application for charge-in/turn-on dated _____ for gas supply to the above project.

2 We are pleased to inform you that your application has been approved and the work will be carried out on _____ at _____.

3 You are required to notify all relevant parties to witness the charge-in.

Yours faithfully

for SENIOR MANAGER
CUSTOMER SUPPLY DIVISION
POWERGAS LTD

cc 1) Owner/Developer
2) PE/LGSW/Architect
3) Main Contractor

FORM GR/3
(04/98)

Our Ref :
Your Ref :
Tel :
Fax : 8318699

Date: _____

To: _____

_____

_____

Our Project Co-ordinator is
Mr _____
Tel: _____
Pager: _____

Dear Sir

STATEMENT OF TURN-ON OR CHARGE-IN OF GAS TO _____

_____

_____

This is to inform you that in response to your application for turn-on/charge-in of gas to the above premises, we have on _____ (date) at _____ (time) introduced gas into the above gas installation. Kindly notify all relevant parties that gas has been turned on/charged in to the above premises.

2 You are hereby informed that no further work on the above gas installation can be undertaken without our written approval.

Yours faithfully

_____
Name & signature of authorised officer
PowerGas Ltd

I acknowledge that gas has been turned on/charged in on the date and time as indicated above.

_____
Applicant or his designated representative

_____ _____
Name NRIC/Passport No.

cc 1) Owner/Developer
2) Architect
3) Main Contractor
4) PE - Please notify all relevant parties not to tamper with the gas installation as gas has been turn-on/charge-in to the above premises.

PU (GS) REG. R9(5)
To be issued immediately after turn-on or charge-in of gas to residential, commercial and industrial projects.

FORM GR/4
(04/98)

TYPICAL GAS COMPOSITION:

COMPONENTS		VOL %
Hydrogen	H_2	61.5
Carbon Dioxide	CO_2	18.0
Methane	CH_4	5.2
n - Pentane i - Pentane & C_6^{++}	}	5.4
Nitrogen	N_2	3.2
Carbon Monoxide	CO	6.0
Oxygen	O_2	0.7

GAS PROPERTIES:

1.	S.G.	=	0.59
2.	Calorific Value	=	18.63 MJ/m^3 @ 288.73^{O} K and 101 kilo-pascals
		=	500 Btu/ft^3
3.	Wobbe Index	=	24.25 MJ/m^3
		=	651 Btu/ft^3
4.	Theoretical air required	=	4.3 - 4.5 vol/vol. of gas
5.	Limits of inflammability	=	3 - 55 % of gas in air
6.	Ignition of temperature	=	> 400° C
7.	Theoretical flame temperature	=	2000° C

DESIGN CRITERIA

1 DESIGN CONSIDERATIONS

1.1 Shortest practicable route from service entry to usage points or appliance connecting points.

1.2 Easy access for maintenance.

1.3 Good ventilation.

1.4 Possibility of early detection in the event of gas leak.

1.5 Permissible pressure drop between SIV and the meter inlet is 7.5 mm H_20.

1.6 Above ground entry into building.

1.7 Accessible location and ease of operation of Service Isolation Valve (SIV) and Service Valve (SV).

1.8 Service isolation valves and/or service valves are not to be interlinked downstream through service pipes or internal pipes.

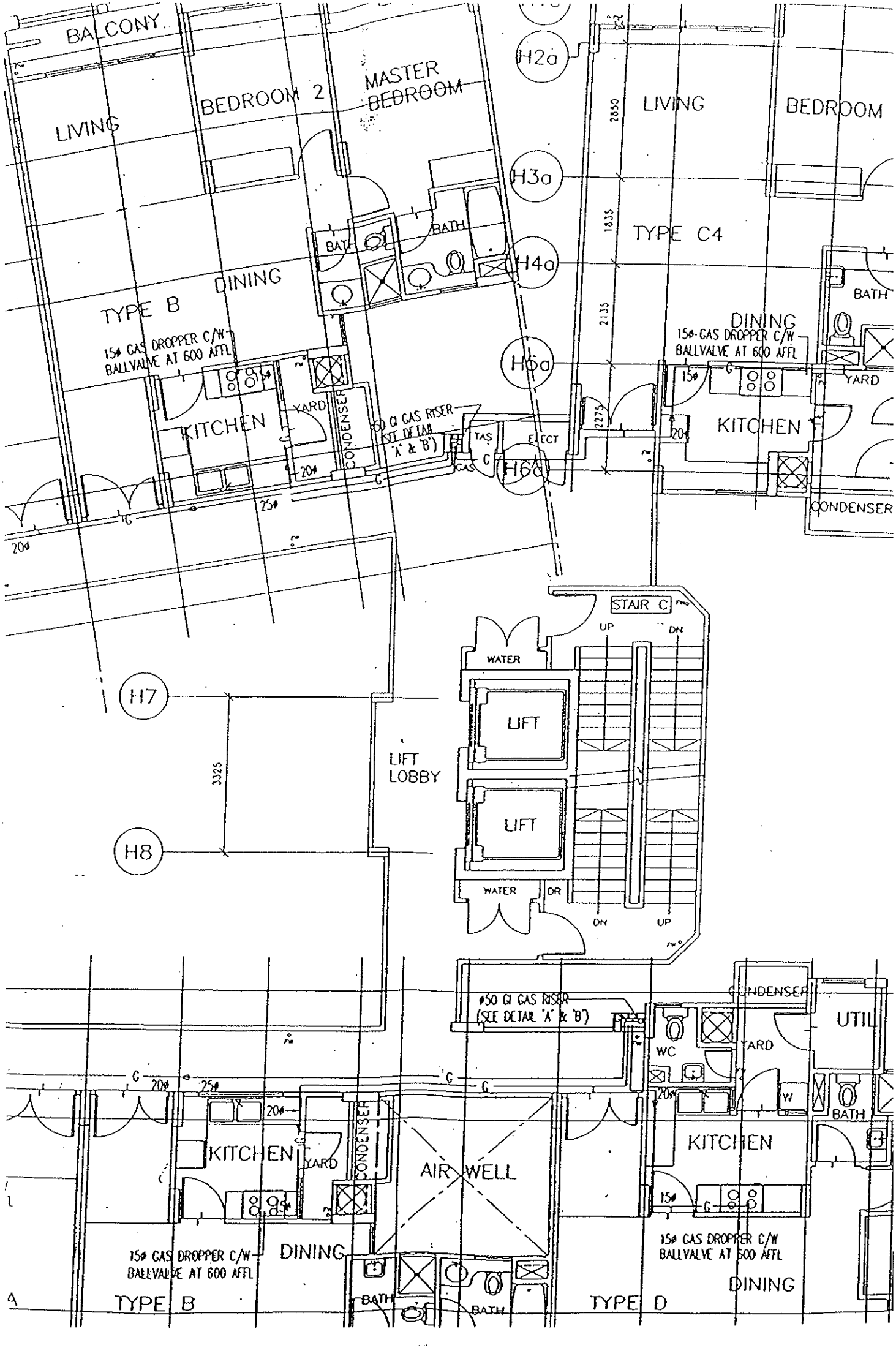
BALCONY
LIVING
BEDROOM 2
MASTER BEDROOM
DINING
TYPE B
15ø GAS DROPPER C/W BALLVALVE AT 600 AFFL
KITCHEN
YARD
CONDENSER
50 Ø GAS RISER (SEE DETAIL 'A' & 'B')
BATH
BATH
TAS
ELECT
GAS
H2a
H3a
H4a
H5a
H6a
H7
H8
2850
1835
2135
2275
LIVING
BEDROOM
TYPE C4
DINING
15ø GAS DROPPER C/W BALLVALVE AT 600 AFFL
BATH
YARD
KITCHEN
CONDENSER
STAIR C
UP
DN
WATER
LIFT
LIFT
LIFT LOBBY
3325
WATER
DR
DN
UP
50 Ø GAS RISER (SEE DETAIL 'A' & 'B')
CONDENSER
UTIL
WC
YARD
W
BATH
KITCHEN
YARD
CONDENSER
AIR WELL
KITCHEN
15ø GAS DROPPER C/W BALLVALVE AT 600 AFFL
DINING
15ø GAS DROPPER C/W BALLVALVE AT 600 AFFL
DINING
BATH
BATH
TYPE B
TYPE D

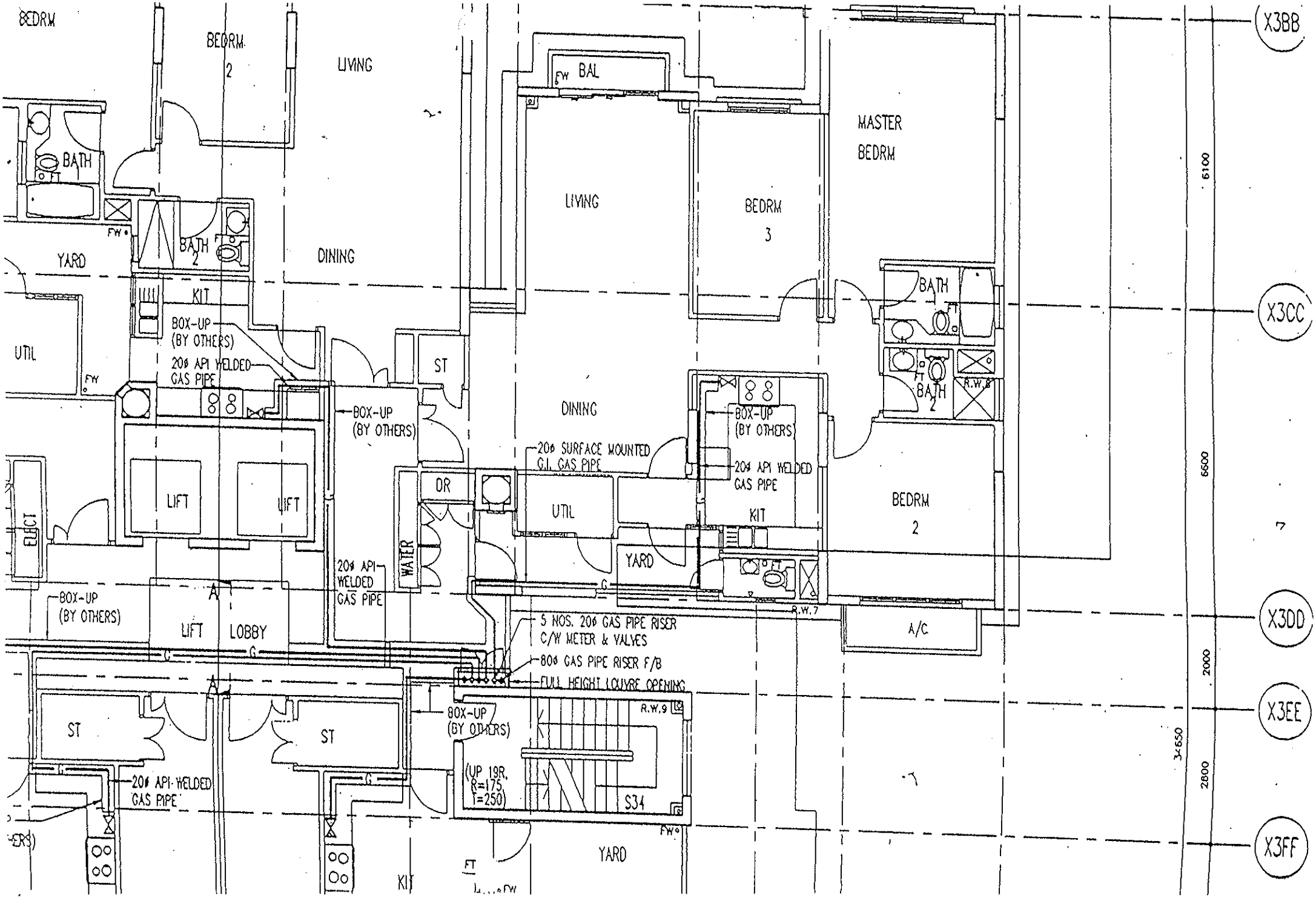
BEDRM
BEDRM 2
LIVING
BAL
MASTER BEDRM
BATH
BATH 2
DINING
LIVING
BEDRM 3
YARD
KIT
UTIL
BOX-UP (BY OTHERS)
20ϕ API WELDED GAS PIPE
ST
DINING
20ϕ SURFACE MOUNTED G.I. GAS PIPE
BOX-UP (BY OTHERS)
20ϕ API WELDED GAS PIPE
BATH 2
R.W.8
DR
UTIL
KIT
BEDRM 2
LIFT
LIFT
DUCT
WATER
YARD
20ϕ API WELDED GAS PIPE
BOX-UP (BY OTHERS)
LIFT
LOBBY
5 NOS. 20ϕ GAS PIPE RISER C/W METER & VALVES
R.W.7
A/C
80ϕ GAS PIPE RISER F/B
FULL HEIGHT LOUVRE OPENING
ST
ST
BOX-UP (BY OTHERS)
R.W.9
(UP 19R, R=175, T=250)
S34
20ϕ API WELDED GAS PIPE
YARD
KIT
X3BB
X3CC
X3DD
X3EE
X3FF
6100
6600
2000
2800
34650

2 SUPPLY CONNECTION FROM GAS MAIN TO CUSTOMER'S SERVICE PIPE

Single supply is preferred.

Dual supply or multi-supply must be highlighted in the plans and proper signs installed to indicate this feature of more than one supply.

3 SERVICE ISOLATION VALVE SIV, SERVICE VALVE, SPOOL

3.1 Service Isolation Valve SIV

A service isolation valve, SIV, is required to be installed at or near the boundary for every connection to PowerGas mains.

3.2 Service Valve SV

A service valve shall be fitted to the service pipe, buried or exposed, before entry into building.

Service valve is not necessary for single domestic installation or where the service pipe is below 50 mm in diameter.

3.3 Spool

Purpose : To maintain a physical break so that gas cannot flow during construction stage.

During construction, a solid spool is to be inserted after the service valve, SV, for all projects.

The spool will be replaced with the standard double flanged distance piece during charge-in.

A spool is also required for commercial kitchen or commercial outlet during installation.

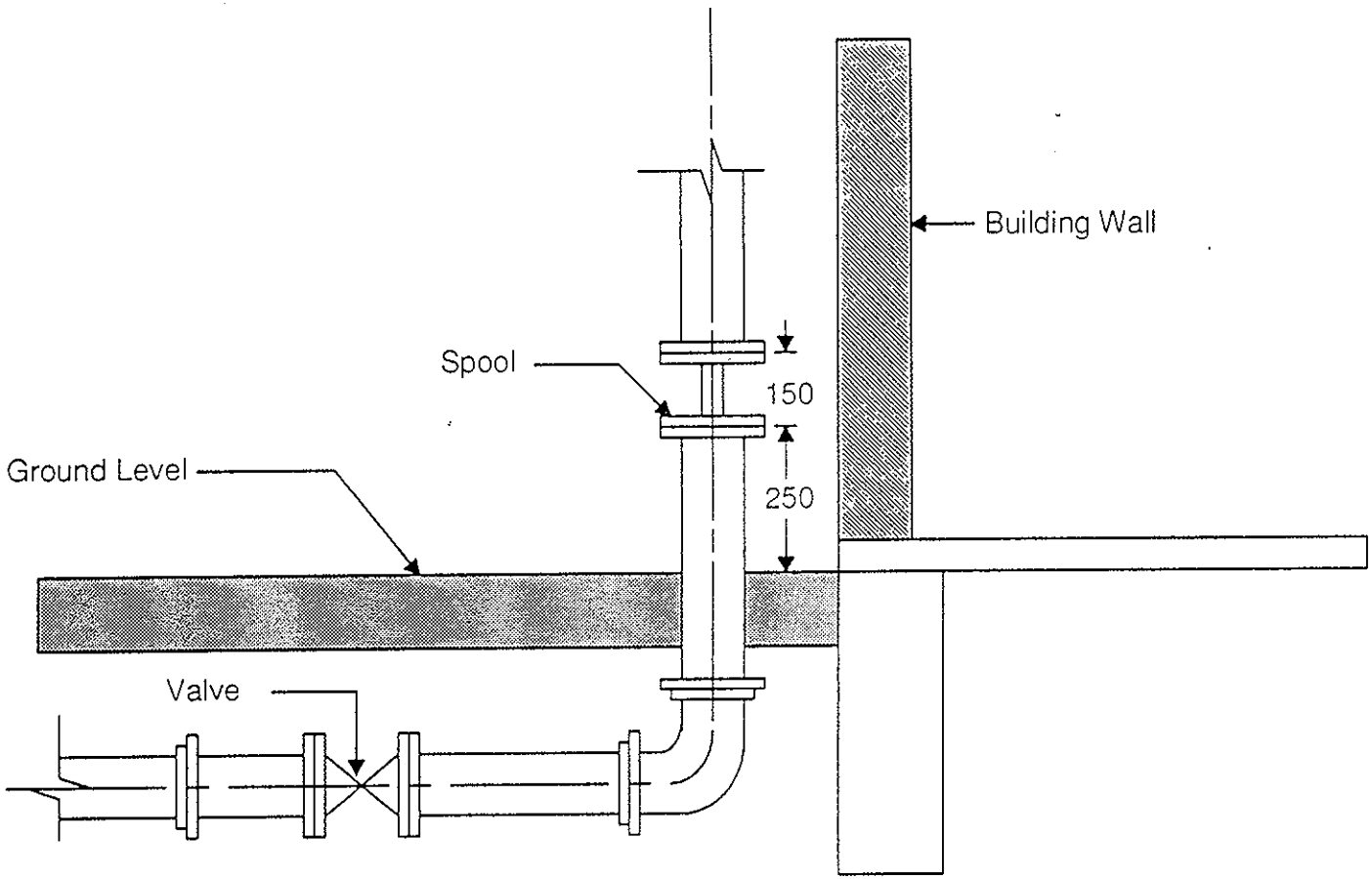

FIGURE 1. DETAILS FOR A SPOOL INSTALLATION AS A SAFETY DEVICE

4 PROHIBITED AREAS

4.1 Gas installation shall not be permitted in the following areas :-

(a) In the ground under concrete flooring within building;

(b) Under building foundations;

(c) Within lift shafts;

(d) In compartments or ducts dedicated for electrical switchgears, transformers or generators;

(e) In refrigeration chambers, cold rooms, air handling rooms and ventilation or air-conditioning ducts;

(f) Adjacent to pipes and vessels containing flammable, oxidising and corrosive materials;

(g) In fire-fighting and rescue command centres, smoke stop lobbies, fire pump rooms, fire-fighting water tank rooms, fire-fighting riser ducts, areas of refuge, protected corridors, protected staircases; and

(h) Bedrooms.

However, when the pipe passes through any of the above prohibited areas as stated in (g) but is encased or compartmentalised by masonry, the pipe is deemed to be not within the prohibited area.

5 AREAS WITH SPECIAL REQUIREMENTS :-

(a) **In false ceilings, storerooms, pump rooms and other enclosed or unventilated areas.**

GI or copper without joint or welded API , with 100% radiography on the welded joints.

All pipes shall be sleeved.

(b) **In mechanically ventilated basement/ carpark.**

API pipes with 100% radiography on all welded joints.

(c) **In mechanically ventilated kitchens.**

A safety cut-off valve interlocking with the mechanical ventilation system.

Where the kitchen is in the basement, a gas detection system in addition to the safety cut-off valve is required.

(d) **In non-residential air-conditioned kitchen and dining areas where gas appliances are installed.**

A gas detection system interlocking with a safety cut-off and the mechanical ventilation system is required.

PIPE INSTALLATION IN RESIDENTIAL PREMISES

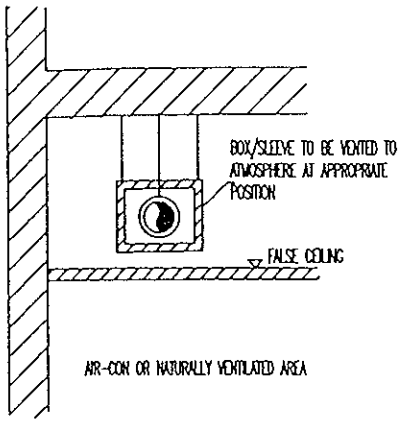

MATERIAL:
1) API
2) GI OR COPPER SHALL BE WITHOUT JOINT

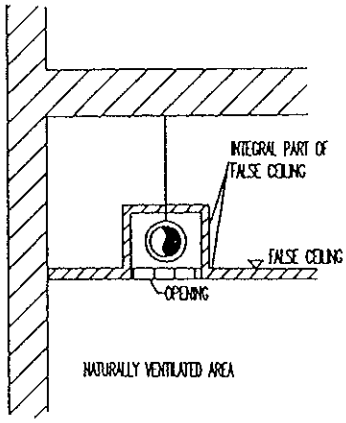

MATERIAL:
1) GI OR COPPER (FULL STRETCH OPENING)
2) API (INTERMEDIATE OPENING)

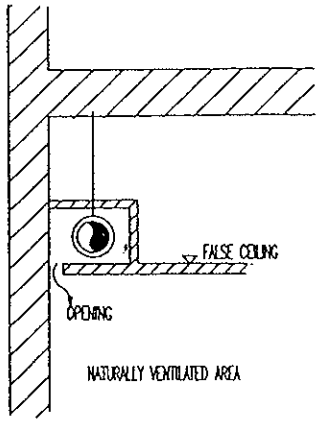

MATERIAL:
GI, API, COPPER (FULL STRETCH OPENING)

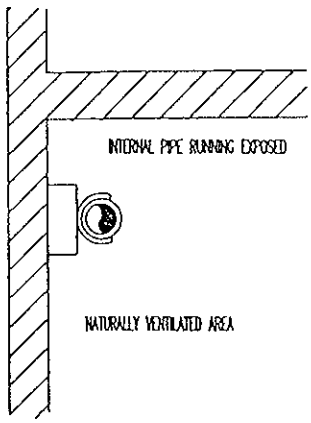

MATERIAL:
1) API, GI, COPPER

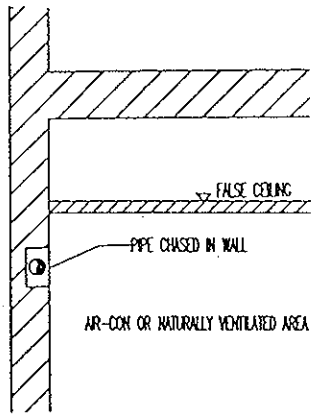

MATERIAL:
API, GI, COPPER
- PIPE CHASED IN WALL SHALL BE RUN BELOW FALSE CEILING, UP TO 20MM DIAMETER ONLY.

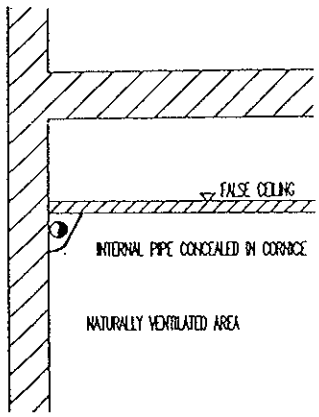

MATERIAL:
API, GI, COPPER
- PIPE CONCEALED IN CORNICE SHALL BE RUN BELOW FALSE CEILING.

NOTES

SLEEVES AND BOXINGS

- MATERIAL: STAINLESS STEEL, PVC PIPE, SHEETMETAL OR GYPSUM BOARD.
- WOOD SHALL NOT BE USED.

INTERNAL PIPE IN FALSE CEILING OF RESIDENTIAL UNIT

- THE PIPE HAS TO BE API WELDED OR GI/COPPER WITHOUT JOINT & NEED NOT BE SLEEVED/BOXED UP.

6 GAS RISER DUCT

(a) **Permanent ventilation shall be provided.**

(b) **Pipe shall be sub-divided and ventilated to atmosphere at each section.**

(c) **Where ventilation at each section is not possible, the duct should extend to the top of the building. The opening for natural ventilation at the top, ground floor and at each floor should not be less than 0.05m^2.**

(d) **Riser duct should have access for maintenance. The door or panel should be fire-rated as specified by the relevant authority.**

6.1 Gas Riser Duct's Dimension

Riser (mm)	Duct Dimension (mm)	
	with meter (W x D)	without meter (W x D)
50	500 X 400	300 X 250
80	550 X 400	400 X 300
100		500 X 400
150		600 X500

6.2 Gas Riser

(a) **Every riser must be supported at its base by a duct foot or other suitable support.**

(b) **Riser shall be secured by properly designed brackets or other suitable supports.**

GAS DUCT DESIGN

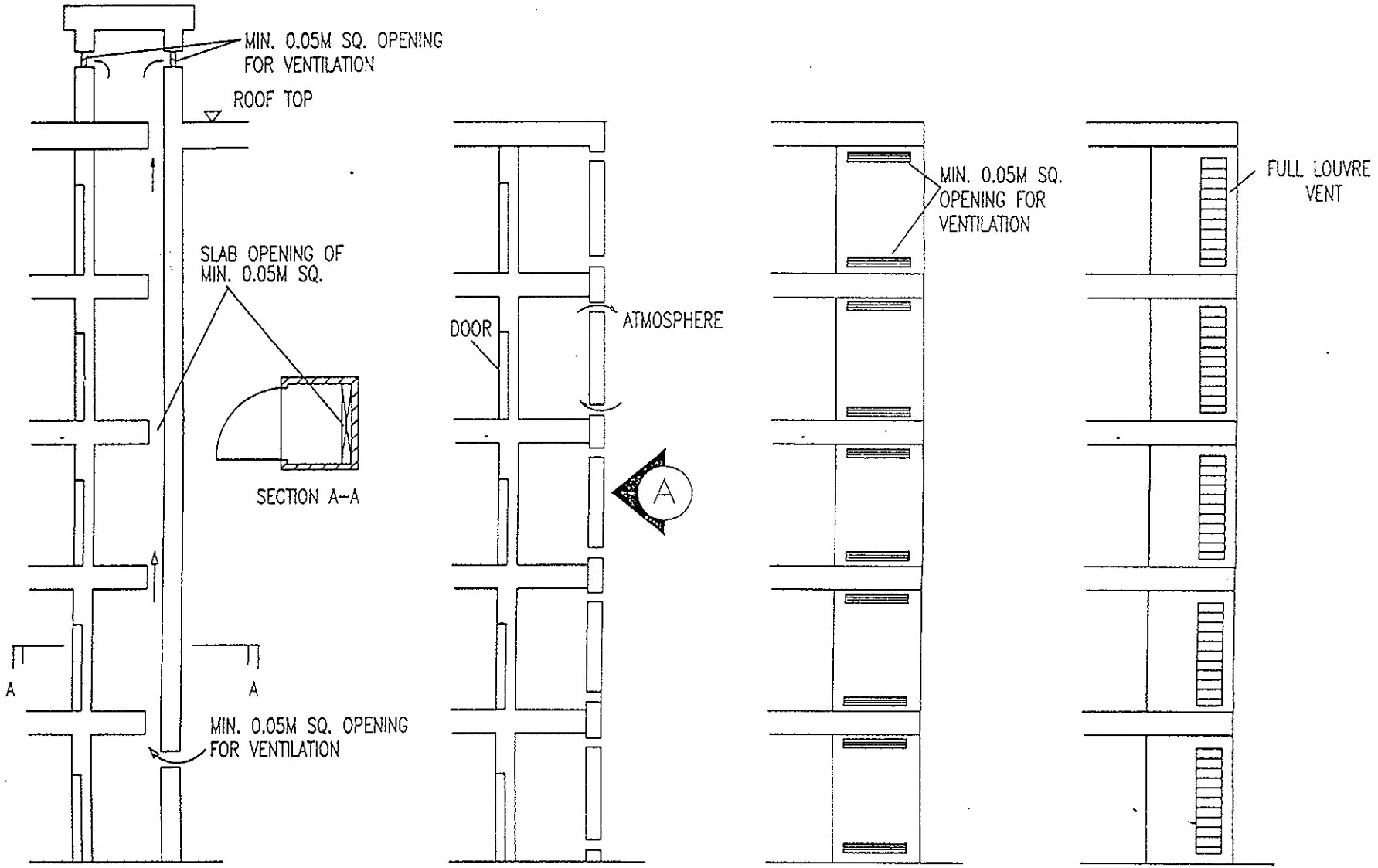

1) THROUGH SHAFT DESIGN
(IN LOBBY, PROTECTED CORRIDOR)

2) SECTIONAL SHAFT DESIGN

ELEVATION 'A'

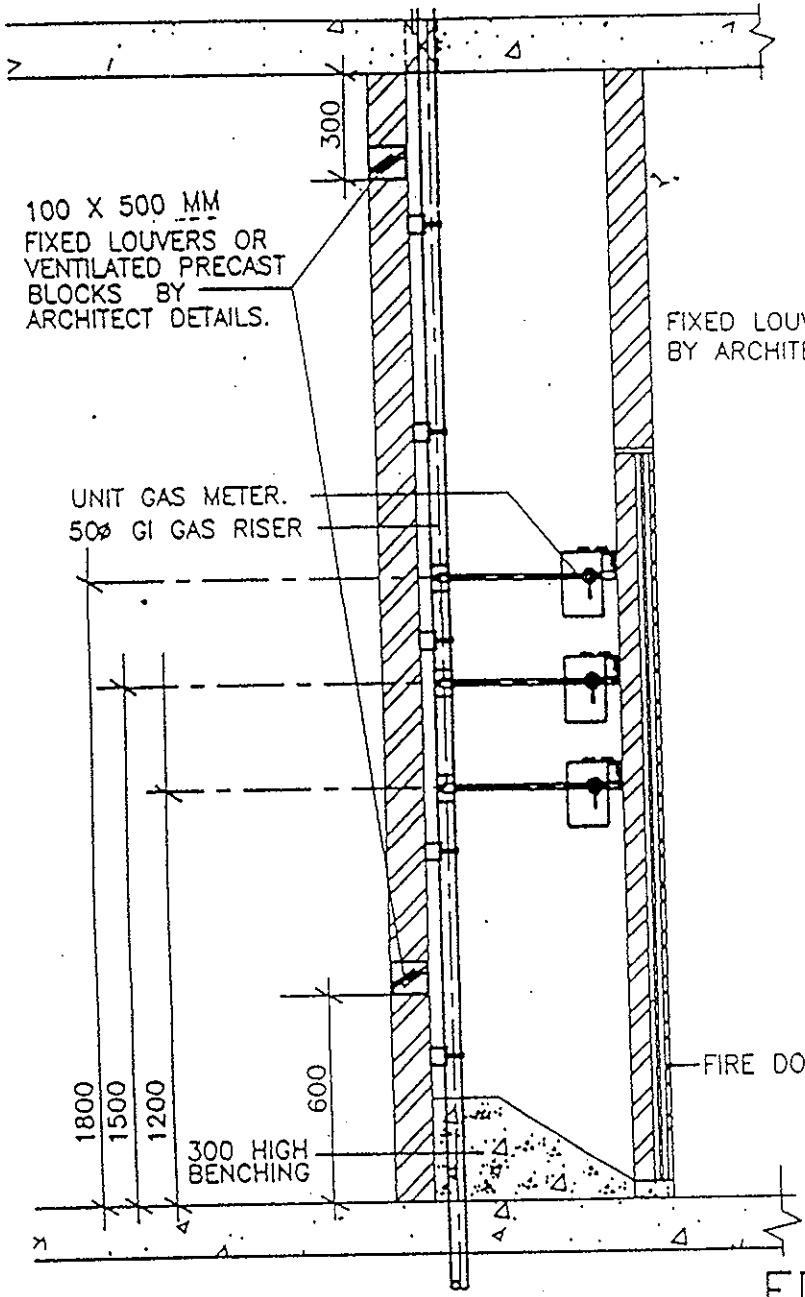

SECTION ELEVATION B-B

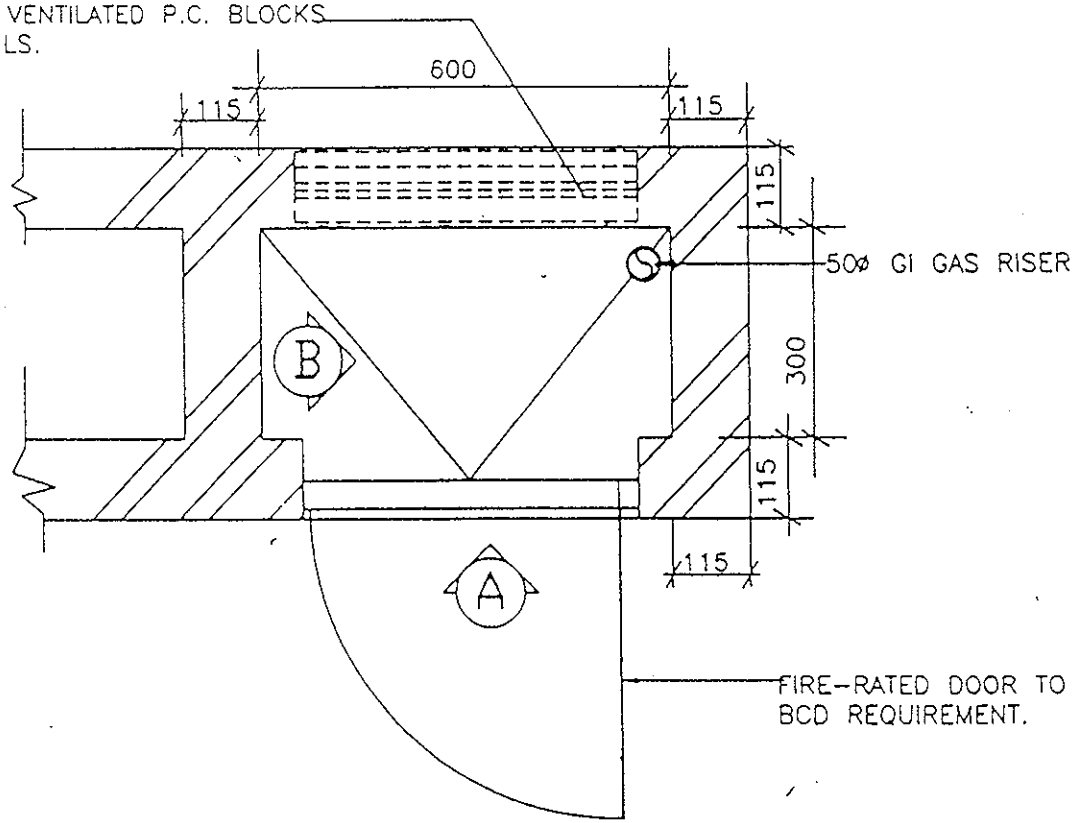

PLAN OF GAS SERVICE DUCT
FOR BACK WALL FACING BUILDING EXTERIOR

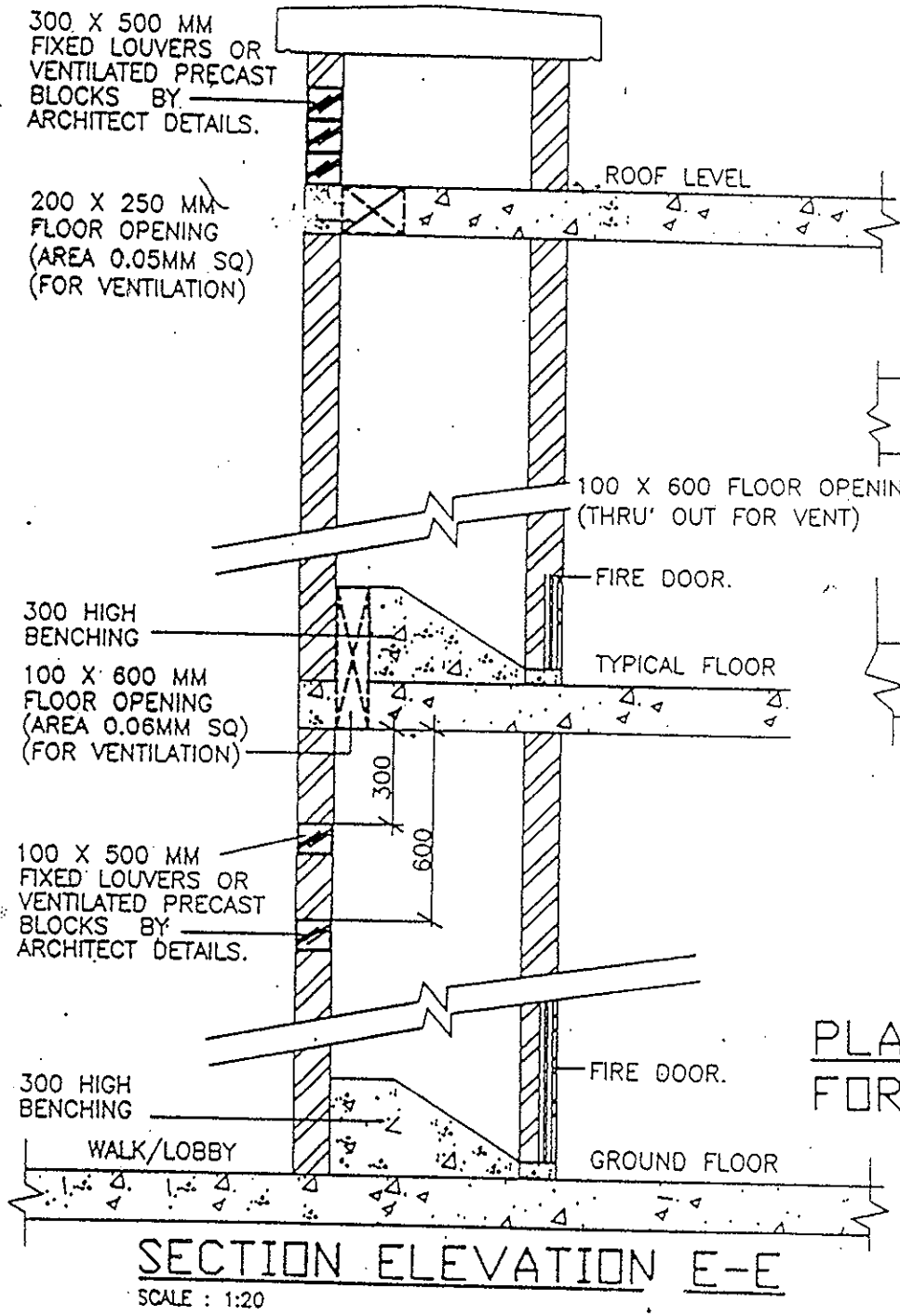

SECTION ELEVATION E-E

SCALE : 1:20

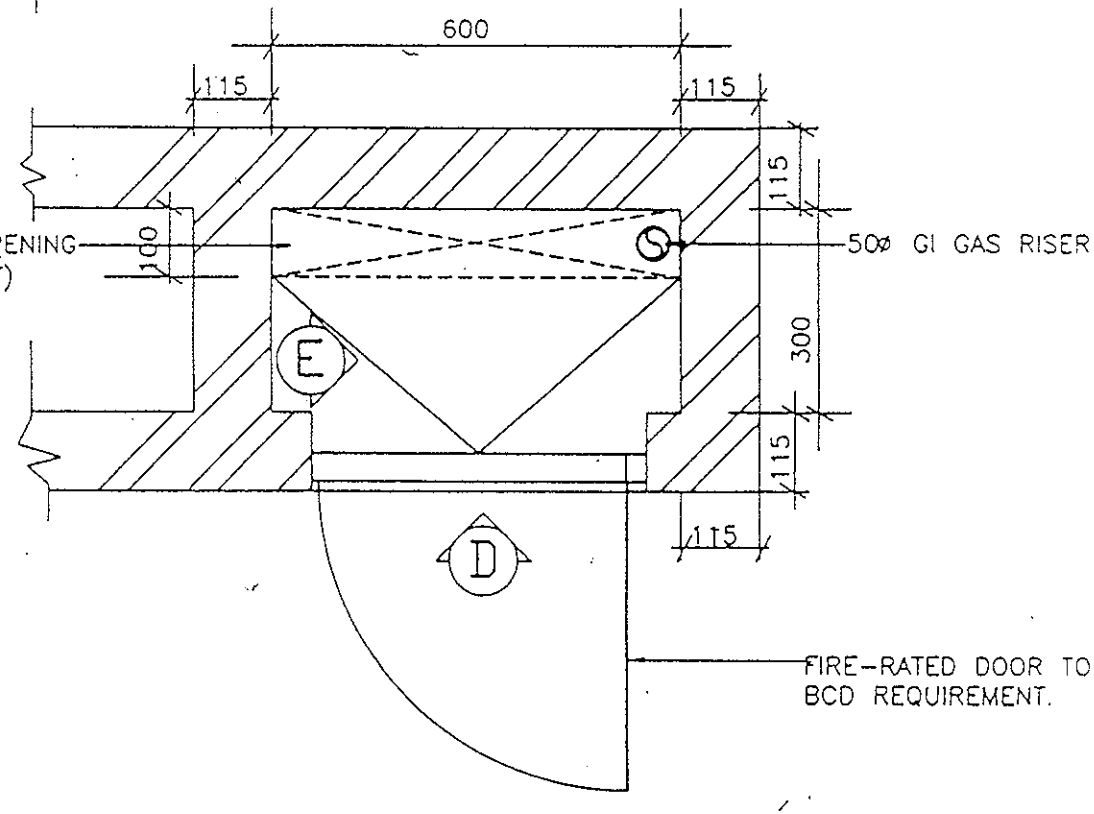

PLAN OF GAS SERVICE DUCT FOR BACK FACING UNIT

INSTALLATION PRACTICES

1 CODE OF PRACTICE AND REGULATORY REQUIREMENTS

The PE/LGSW shall ensure that the design of the gas installation and the work carried out comply with the following requirements :-

(i) **Public Utilities Act (Chapter 261, 1996 Ed);**

(ii) **Public Utilities (Gas Supply) Regulations 1997;**

(iii) **Code of Practice for Manufactured Gas Pipe Installation CP51 : 1995;**

(iv) **Handbook on Procedures and Requirements for Gas Supply (reviewed 1996);**

(v) **Any other relevant rules, regulations and Codes of Practices.**

2 GAS INSTALLATION WORK

All gas installation work shall be carried out by a licensed gas service worker, LGSW, in accordance with the drawings approved by PowerGas.

3 UNAUTHORISED WORK ON GAS PIPE INSTALLATION

No replacement, addition/alteration work on gas installation shall be carried out without prior written approval by PowerGas.

No further work is allowed on a gas installation after it has passed the final pressure test. If any further work has to be carried out, a new application for the work shall be made.

All connections to Gas Mains must be carried out by PowerGas.

4 BURIED SERVICES

4.1 Pipes and Fittings

a) Mains and services above 80mm - Ductile iron to BS4772 Class K9

b) Mains and services 80mm and below -Galvanised iron to BS1387 or Singapore Standard (SS17) - Class C

c) The GI pipe has to be wrapped with a petrolatum tape on 50% overlap

d) Zinc anode caps ASTM B418-80 Type 1 are to be installed for all underground ductile iron pipe.

4.2 Types of Joints

a) **Ductile Iron Pipe - Bolted gland type**

In this joint, a lead rubber gasket of nitrile rubber (NBR) or epichlorhydrin (ECO) is compressed and secured in position between the spigot of one pipe and the socket of the other by means of a gland or 'T' headed bolt.

b) **Galvanised Iron Pipe - Thread joint**

Taper thread to BS 21 with unsintered PTFE tape (Polytetra flouro ethylene) complying to BS 4375.

4.3 Excavation

a) **Minimum cover 300mm**

b) **Area/road with vehicular load - minimum cover 1 metre**

c) **In common trench with other services - Space of at least 300mm between gas pipe and other services**

4.4 Slope

A fall of at least 10mm in 2m (1 in 200).

4.5 Syphon

A syphon shall be provided for the removal of condensate at the lowest point of service/main.

Syphon standpipe shall be of stainless steel to BS3605.

A surface box and cover to BS5384 Part 2 shall be placed over the standpipe.

4.6 Pipe Channel

a) Where service/main has to cross apron, concrete floor/walkway before entering the building, the pipe shall be accommodated in concrete channel.

b) Channel shall be filled with cement mortar/ sand.

4.7 Backfilling

The trench shall be properly filled in using selected material where necessary and properly consolidated to the requirement of the relevant authority.

4.8 Valves

4.8.1 Service Isolation Valves (SIV)

a) The SIV should be installed either buried or exposed at or near the boundary line of any property.

b) Above 80mm - Ductile iron gate valve to BS5150.

c) 80mm and below - Ball valve.

4.8.2 Service Valve (SV)

a) The service valve shall be fitted to the service pipe before entry into the buildings for the purpose of controlling the gas flow into the building;

b) Use ball valve for size up to 80mm. Above 80mm, ductile iron gate valve to BS5150.

c) All buried SV shall be fitted with a surface box and cover in accordance with BS5834 Part 2.

5 PIPES WITHIN BUILDING

5.1 Material for pipes and fittings.

a) Service Riser - Galvanised iron heavy gauge to BS1387

b) Internal Pipe - Galvanised iron to BS1387 or copper tube complying with BS2871 Part 1 Table X. For 15mm copper tubes, joints shall be brass compression fittings.

c) In areas where welded joints are required
- Steel pipe API Schedule 40 protected with anti-corrosion coating.

d) Pipe concealed in brickwall
- Galvanised iron or copper. For copper, half hard and annealed, complying with Table Y, BS2871 and only sizes of ϕ15mm and ϕ22mm are allowed. The joints shall be capillary, using fittings complying with BS864 Part 2.

5.2 Threads fittings and flanges.

a) BS21 pipe threads for galvanised pipes and fittings.

b) BS864 Part 2 - Capillary and compression fittings for copper tubes.

c) GI pipe 100mm and above shall have screwed flange joints, complying to BS4504.

5.3 Pipe Entry into Building

Gas service pipe should preferably enter the building above ground and remain in the above ground and ventilated area.

5.4 Buried Pipe Entering Directly into Basement Area

(i) Where pipe has to enter directly into basement area, the spool must be installed in a visible and readily accessible location outside the building.

(ii) Only welded joints are allowed in the basement area.

(iii) Steel sleeve shall be provided on the basement wall for the pipe to pass through. The service pipe shall be wrapped with petrolatum tape and has no joint within the basement wall.

(iv) The annular space between the pipe and the sleeve shall be completely sealed at each end with suitable waterproof sealant.

(v) Special care must be taken to protect the service pipe from corrosion.

BASEMENT ENTRY (1)

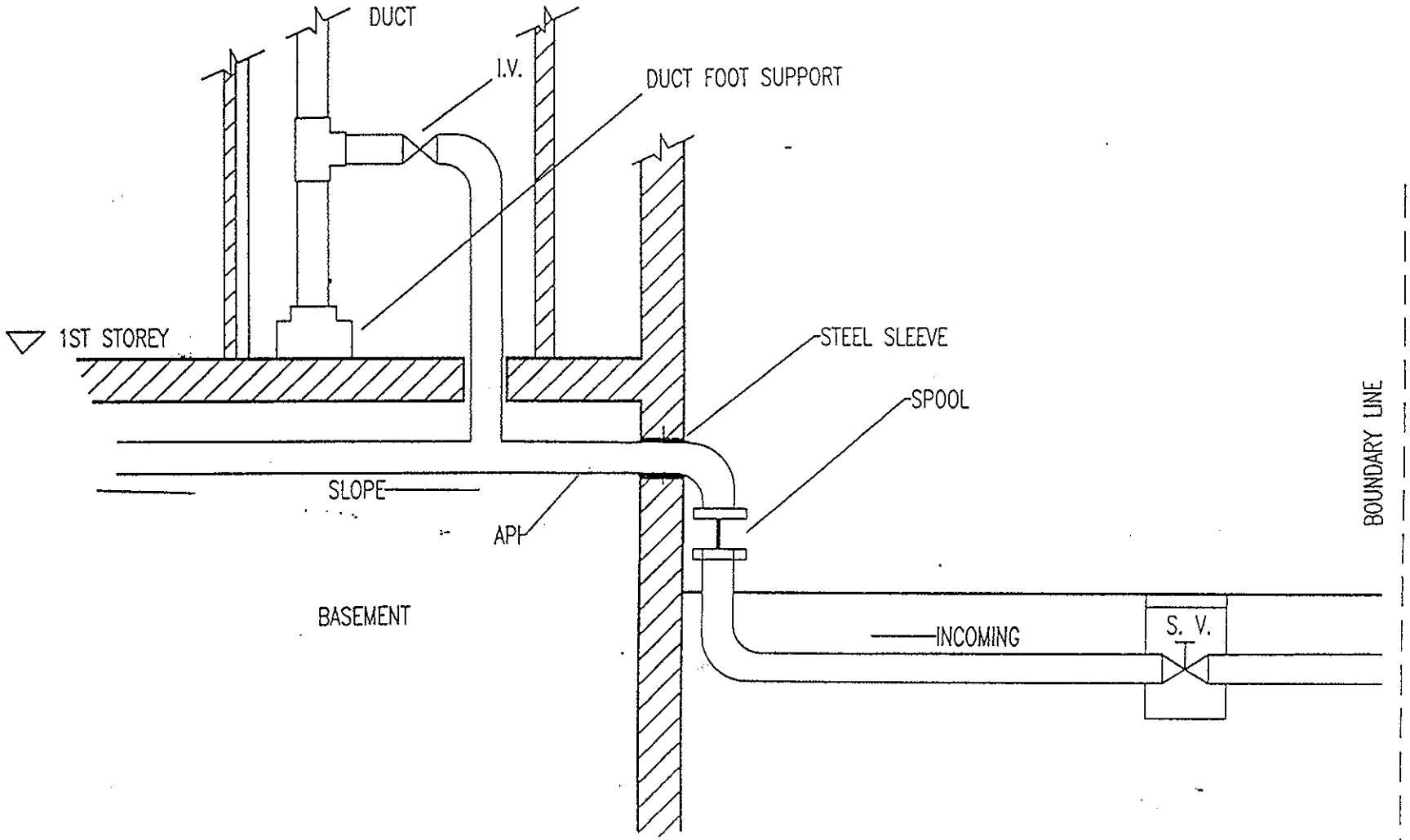

S.V.–SERVICE VALVE
I.V.–ISOLATION VALVE
* SYPHON TO BE DETERMINED ON SITE

BASEMENT ENTRY (2)

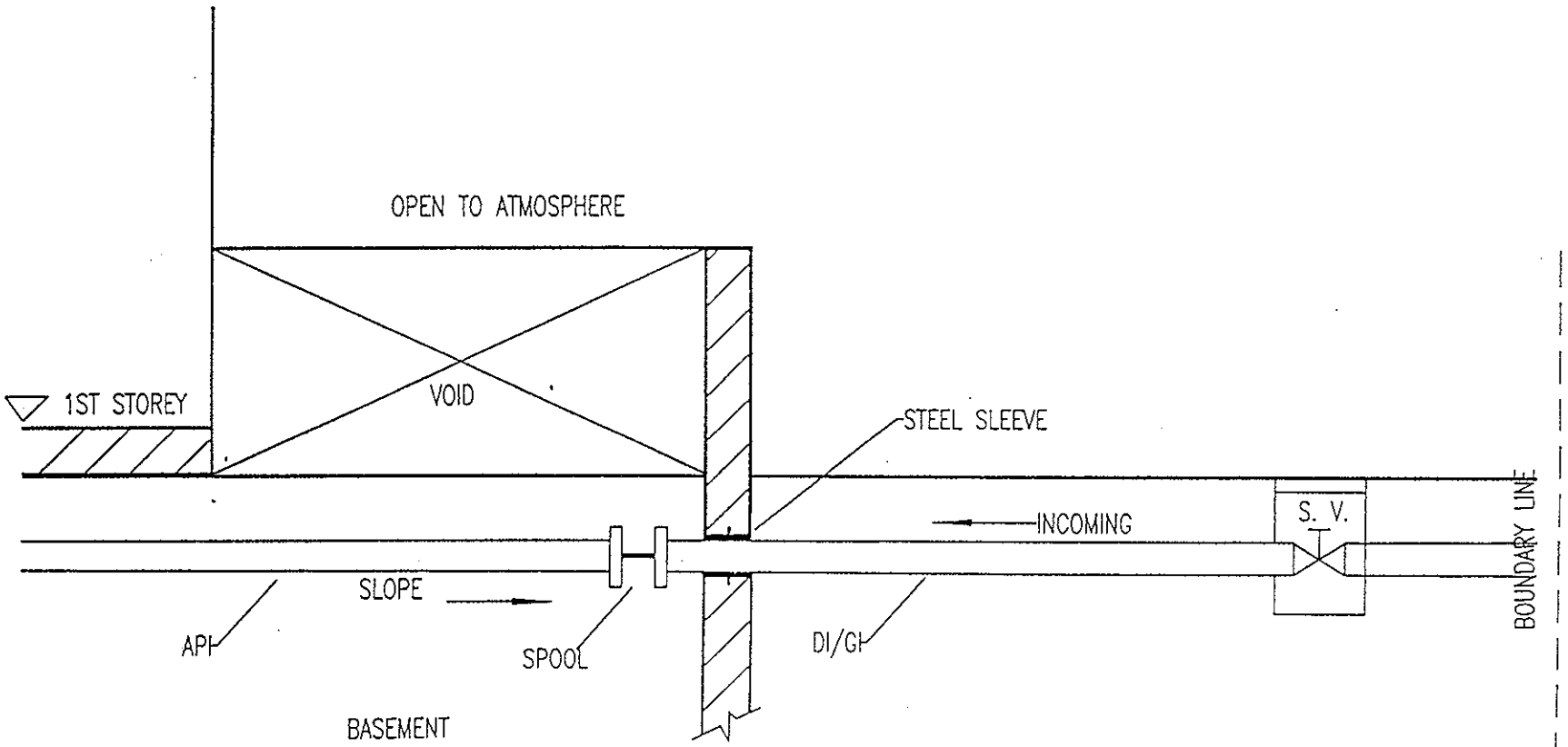

S.V.–SERVICE VALVE
I.V.–ISOLATION VALVE
* – SYPHON TO BE DETERMINED ON SITE
* – SPOOL TO BE LOCATED AT THE VOID AREA NEAR DIAPHRAGM WALL

BASEMENT ENTRY (3)

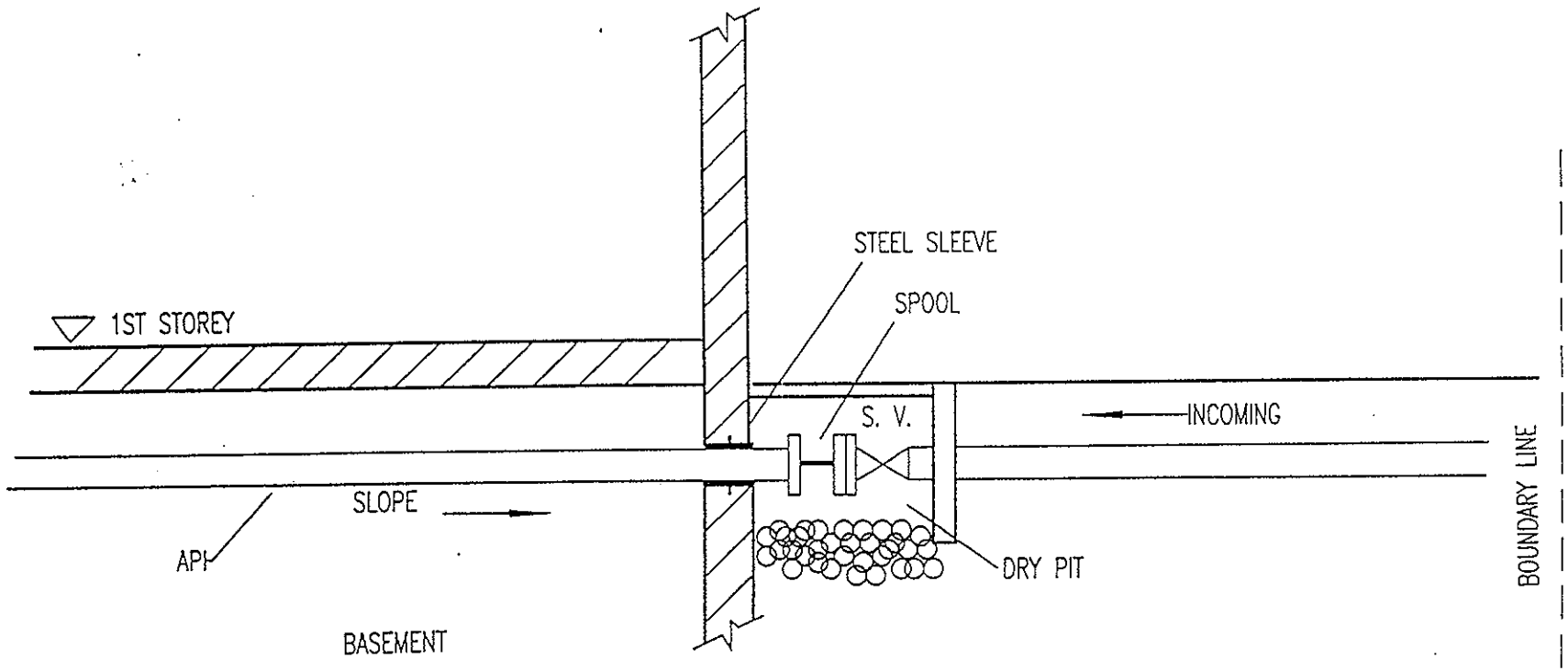

S.V.–SERVICE VALVE
* – SYPHON TO BE DETERMINED ON SITE
* – TO PROTECT THE API PIPE AND CONNECTION AGAINST CORROSION

5.5 Slope

The slope for internal pipe shall be 10mm in 2m (1 in 200). Syphon leg shall be provided at suitable location if slope is not achievable.

5.6 Pipe Supports

Maximum distance between supports - 3m.

5.7 Gas Pipe Identification

Canary yellow BS381C Colour No. 309.

5.8 Pipe in Air-Conditioned Area

Where pipework passes through air-conditioned area, the pipe should be adequately insulated to prevent excessive condensation.

6 SAFETY DEVICES

6.1 Isolation Valve

Where service pipe has extended to many areas within a building, isolation valves shall be installed to control gas supply to each area.

6.2 Solenoid Valve

A direct-acting solenoid valve with manual reset shall be installed after the isolation valve to control gas supply for the mechanically ventilated kitchen. The solenoid valve is to be interlocked with the mechanical ventilation system.

6.3 Gas Detection System

Where the MV kitchen is air-conditioned or where the kitchen is linked to air-conditioned space or where burners are installed in air-conditioned dining area etc., a gas detection system shall be installed in addition to the solenoid valve.

6.4 Non-Return Valve

Where gas equipment is using compressed air or compressed gas from a compressor, a non-return valve shall be installed to prevent the compressed air or gas from getting into the gas supply system.

6.5 Flame Failure Device

Commercial oven and equipment with enclosed burner system shall incorporate flame failure device to ensure safe shut down in the event of gas interruption or equipment failure.

6.6 Gas Booster

Where a gas compressor or booster is installed, the safety controls required are high and low pressure cut-out switches and non-return valve. The booster shall be installed in a well ventilated area. Where necessary, gas detection system should be installed.

A PE shall be responsible for the design, selection, installation and commissioning of the gas compressor / booster system.

6.7 Forced Draught Burners

Where forced draught burners are used, suitable non-return valves and low pressure cut-off switch/valve should be installed in addition to the solenoid valve.

7 PRESSURE TESTING OF PIPES

7.1 General

(i) Medium of testing - air or nitrogen.

(ii) The pipe shall be disconnected from meters, appliances and any charged-in gas pipe before testing.

(iii) All ends of the pipes are properly plugged, capped or blank-flanged and anchored (for ductile pipe).

7.2 Test Pressure and Duration

a) **Ductile Pipe**

Test pressure - 140 kPa using 0-200 kPa pressure gauge

Test duration - 24 hours

b) **Galvanised Pipe (Buried)**

Test pressure - 20 kPa (2000mm w.g.) using 0-2500mm pressure gauge

Test duration - 30 minutes

c) **Galvanised Pipe (Exposed) - Two Tests**

(i) **Test pressure - 20 kPa (2000mm w.g.)**

Test duration - 30 minutes

and

(ii) **Test pressure - 300mm w.g.**

Test duration - 10 minutes

d) Copper Pipe

Test pressure - 300mm w.g

Test duration - 10 minutes

e) API Pipes

Test pressure - 70 kPa using 0-200 kPa pressure gauge

Test duration - 30 minutes

8 PURGING AND CHARGE-IN

8.1 General

(i) Purging is organised by the DR and conducted in the presence on PowerGas' PC.

(ii) A proof test shall be carried out immediately preceding to purging/charge-in

(iii) Areas affected are to be barricaded, safety signs put up and no-naked flame in the vicinity is allowed.

(iv) Standpipe more than 2m long with flame traps and control valves shall be erected at suitable location and connected to the appropriate purge- points.

(v) Every vent point shall be supervised by the LGSW.

(vi) A gas detector which measures the value of gas in air shall be used. Purging is only completed when 100% discharge of gas at the standpipe is achieved.

(vii) On completion of the purging process, the disturbed joints shall be tested for leakage.

8.2 Purging with Inert Gas

Service pipe and internal pipe up to and including 50mm outside diameter may be purged and commissioned directly with gas or decommissioned directly with air.

Short length of service pipe and internal pipe about 50mm to 300mm outside diameter may also be commissioned directly with gas, provided the volume does not exceed 2.5 cubic metres.

All other pipes should be commissioned using an inert gas interface.

9 MATERIALS

(a) Buried service pipes ϕ100mm and above :

Ductile pipe with flexible bolted gland joint type complying with BS4772 - Class K9.

(b) Above ground in well-ventilated areas :

Galvanised iron pipe complying with BS1387 or SS17.

GI pipeϕ100mm and above - screwed flanged joints complying with BS4505.

GI pipe below ϕ100mm - tapered screw threads complying with BS21.

(c) In enclosed or mechanically ventilated areas :

API pipe standard 5L Grade B with welded joints shall be used.

(d) In residential unit - copper or GI pipe :

Such pipes up to ϕ22mm can be chased in the wall. Copper pipe should be half hard and annealed, complying with Table Y of BS2871 and the joints shall have capillary joints complying with BS864 Part 2.

(e) Valves :

ϕ100mm and above - gate valve complying with BS5150.

Below ϕ100mm - ball valve complying with BS1552.

PE Pipe (Polyethylene)

- **Grades of PE pipe**

  - PE 80; refers to PE pipe with MRS of about 8 Mpa (80bar)

  - PE100

- **Standard**

  - ISO 4437 : Buried PE pipes for the supply of gaseous fuels.

  - B.S. 7281 : 1990 PE pipes for the supply of gaseous fuels.

- **Max. Operating Pressure**

  - Medium Density PE - 5.5 bar

  - High Performance High Density PE - 7.0 bar

- **Jointing Method**

  - Electrofusion

  - Butt Fusion

- **Useful Definitions**

  SDR - standard dimension ratio; ratio of nominal outside diameter of a pipe to its nominal wall thickness.

  SDR = dn/en

  MRS - minimum required strength; expresses as a hoop stress in megapascals.

  MDPE - Medium Density PE

  HPPE - High Performance High Density PE

POLES FORMULA

Calculating of pipe sizes in low pressure systems using 'POLES FORMULA'.

$$Q = 0.0071 \sqrt{hd^5/sl}$$

Where	l	=	length in metres
	h	=	pressure loss in millibars
	s	=	specific gravity (0.59 for PowerGas)
	d	=	diameter in millimetres
	Q	=	quantity (or gas rate) in cubic metres per hour

Calculation for pressure gain in gas riser.

$$\mathbf{P_g = 0.12\ h\ (1 - s)}$$

Where	$\mathbf{P_g}$	=	pressure gain in millibars
	h	=	height in metres
	s	=	specific gravity (0.59 for PowerGas)

Electrical Installation in Building - Legislation, Clearance & Licensing

Lecture 7 (Thursday, 28th August 2003)

By

Er. Joseph Michael

The Regulations Governing Consumers' Electrical Installations

Date : 28th Aug 2003
Time : 6.30pm - 8.30pm

Presented by: Mr Joseph Michael
Sr Engineer (Electricity & Gas Safety)

Venue : *Venue* : IES Building
70 Bukit Tinggi Road
Singapore 289758

ENERGY MARKET AUTHORITY

The Legislative Hierarchy

- ACTS
- REGULATIONS
- CODES OF PRACTICE
- STANDARDS
- ADMINISTRATIVE MEASURES

Energy Market Authority

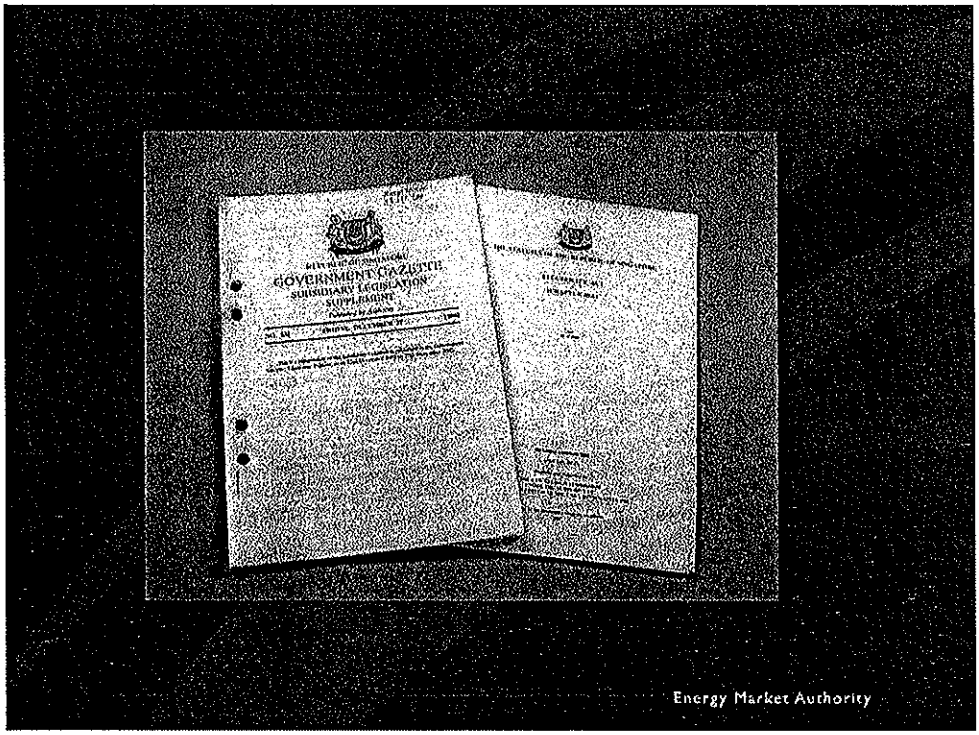
GOVERNMENT GAZETTE
SUBSIDIARY LEGISLATION
SUPPLEMENT
Energy Market Authority

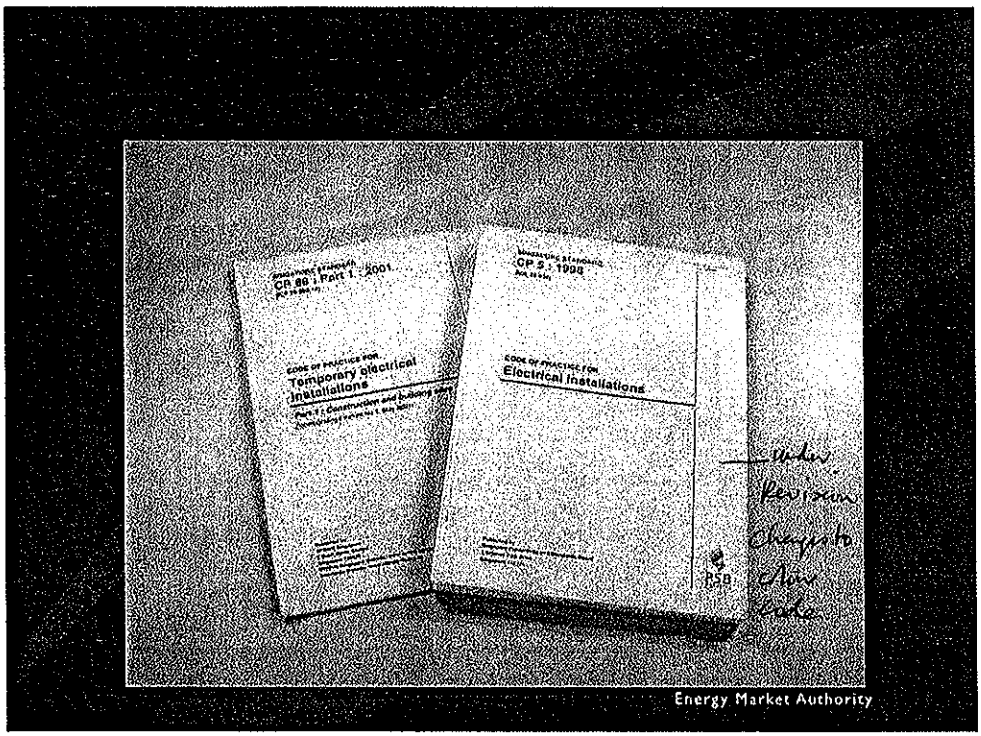
CP 5 : 1998
CODE OF PRACTICE FOR
Electrical Installations
CP 88 : Part 1 : 2001
CODE OF PRACTICE FOR
Temporary electrical installations
Part 1 : Construction and building sites
PSB
Energy Market Authority

The Changes in the Legislative Landscape

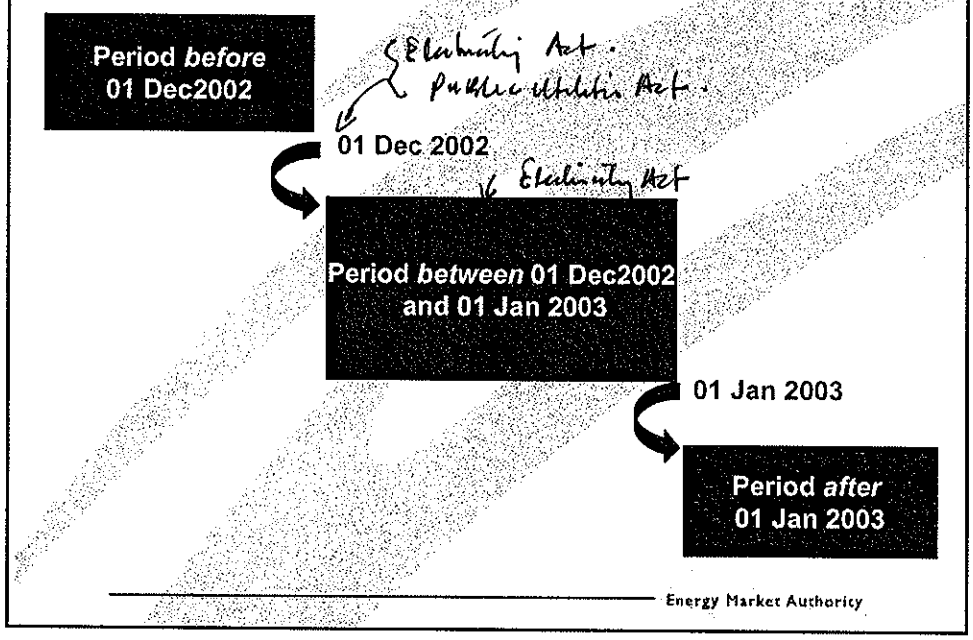

The Regulatory Regime for Consumers' Electrical Installations *before* 01.12.2002

Regulation Division, EMA, enforced the following Acts & Regulations in respect of consumers' electrical installations:

1 The Public Utilities Act (Cap. 261)

1.1 The Public Utilities (Electricity) Regulations 1997

1.2 The Public Utilities (Electricity Supply) Regulations 1997

1.3 The Public Utilities (Licence to Use or Operate Electrical or Supply Installations) Regulations 1997

2 The Electrical Workers & Contractors Licensing Act (Cap. 89)

2.1 The Electrical Workers and Contractors Licensing Regulations 1997

The Regulatory Regime for Consumers' Electrical Installations *before* 01.01.2003 ..... *cont'd*

The following Act and Regulations were repealed on 1st Dec 2002:

- **The Electrical Workers & Contractors Licensing Act (Cap. 89)**
- The Electrical Workers and Contractors Licensing Regulations 1997

The relevant part of the Electricity Act (Cap. 89A) and the Electricity (Electrical Workers) Regulations 2002 came into operation with effect from 1st Dec 2002.

All Licensed Electrical Workers were informed of the changes through circular RD/E01/2002 dated 30 Nov 2002

The Regulatory Regime for Consumers' Electrical Installations *after* 01.01.2003 ..... *cont'd*

- The New Electricity Market opened on 1st Jan 2003 and the consumers' electrical installations are now being regulated under the following Act and Regulations:
  - **Electricity Act (Cap. 89A)**
  - The Electricity (Electrical Installations) Regulations 2002 - 1st Jan 2003

    These Regulations replaced those three regulations made under The Public Utilities Act that were mentioned in the previous slide

    All licensed Electrical Workers were informed of the changes through RD/E02/2002 dated 30 Dec 2002

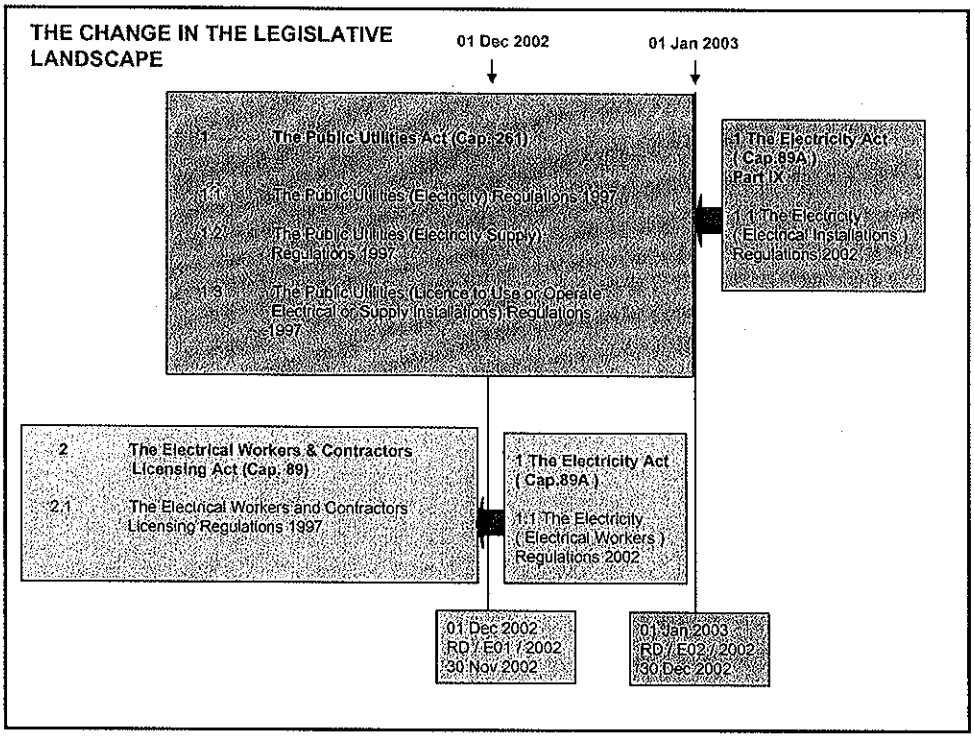
THE CHANGE IN THE LEGISLATIVE LANDSCAPE
01 Dec 2002
01 Jan 2003
1 The Public Utilities Act (Cap. 261)
1.1 The Public Utilities (Electricity) Regulations 1997
1.2 The Public Utilities (Electricity Supply) Regulations 1997
1.3 The Public Utilities (Licence to Use or Operate Electrical or Supply Installations) Regulations 1997
1 The Electricity Act (Cap.89A) Part IX
1.1 The Electricity (Electrical Installations) Regulations 2002
2 The Electrical Workers & Contractors Licensing Act (Cap. 89)
2.1 The Electrical Workers and Contractors Licensing Regulations 1997
1 The Electricity Act (Cap.89A)
1.1 The Electricity (Electrical Workers) Regulations 2002
01 Dec 2002 RD / E01 / 2002 30 Nov 2002
01 Jan 2003 RD / E02 / 2002 30 Dec 2002

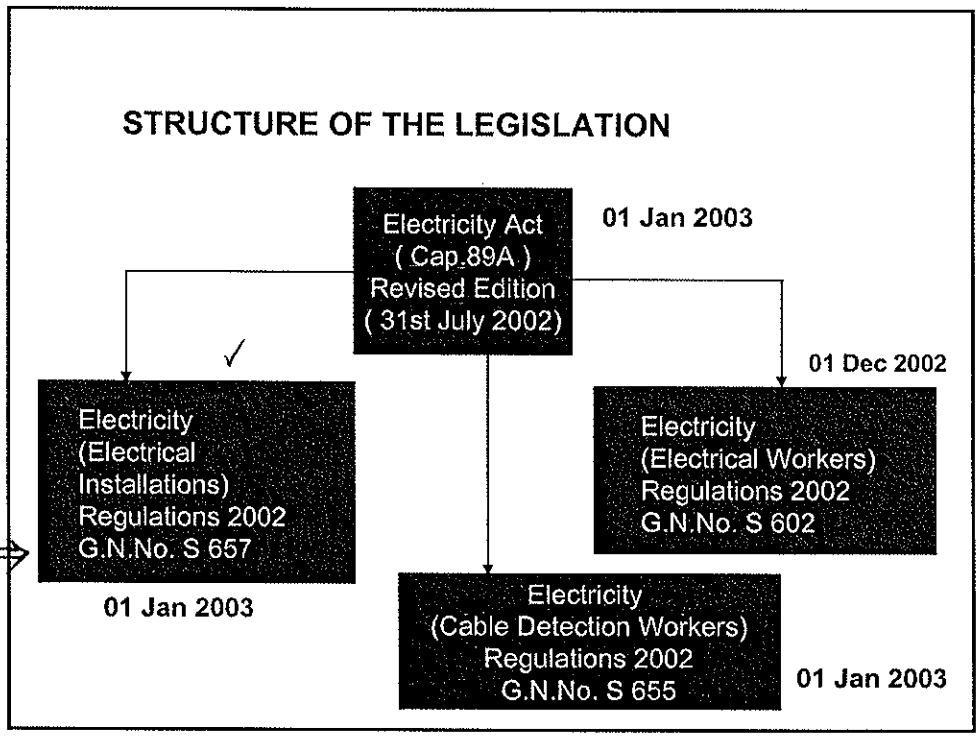
STRUCTURE OF THE LEGISLATION
Electricity Act (Cap.89A) Revised Edition (31st July 2002)
01 Jan 2003
01 Dec 2002
Electricity (Electrical Installations) Regulations 2002 G.N.No. S 657
01 Jan 2003
Electricity (Electrical Workers) Regulations 2002 G.N.No. S 602
Electricity (Cable Detection Workers) Regulations 2002 G.N.No. S 655
01 Jan 2003

The Electricity (Electrical Installations) Regulations 2002

Part	Title	Regulation
I	Preliminary	1 - 2
II	Electricity Supply	3 - 11
III	Electrical Installations	12 - 22

Energy Market Authority

The Electricity (Electrical Installations) Regulations 2002 *.....cont'd*

Part	Title	Regulation
IV	Work on High Voltage Apparatus	23 - 26
V	Licensing of Electrical and Supply Installations	27 - 39
VI	Miscellaneous	40 - 41

Energy Market Authority

The Electricity (Electrical Workers) Regulations 2002

Part I Preliminary

Regulations 1 - 2

ENERGY MARKET AUTHORITY

The Electricity (Electrical Installations) Regulations 2002 *.....cont'd*

Part I Preliminary Remarks

Rg 1	Citation and commencement	• Title is specified • Commencement date : 1st Jan 2003
Rg 2	Definitions	• 23 terms are defined

Energy Market Authority

The Electricity (Electrical Installations) Regulations 2002

Part II Electricity Supply

Regulations 3 - 11

ENERGY MARKET AUTHORITY

The Electricity (Electrical Installations) Regulations 2002 *.....cont'd*

Part II	Electricity Supply	Remarks
Rg 3	Voltages for supply	• Voltage levels are specified 230V to 66kV • Voltage variation is + or - 6% • Frequency is 50Hz

Energy Market Authority

H_2 - ± n/a define ?

The Electricity (Electrical Installations) Regulations 2002 *.....cont'd*

Part II	Electricity Supply	Remarks
Rg 4	Request for supply	There are 2 categories of consumers : • Contestable and • Non-contestable

Energy Market Authority

The Electricity (Electrical Installations) Regulations 2002 *.....cont'd*

Part II	Electricity Supply	Remarks
Rg 5	Connection of electrical installation to supply line	• Consumer's LEW inspects and certifies EI fit • LEW issues COC

Energy Market Authority

The Electricity (Electrical Installations) Regulations 2002 *.....cont'd*

Part II	Electricity Supply	Remarks
Rg 6	Meters	• Transmission licensee (PGL) determines where supply line ends and provides meter at this point. • Consumer provides meter board.

Energy Market Authority

The Electricity (Electrical Installations) Regulations 2002 *.....cont'd*

Part II	Electricity Supply	Remarks
Rg 7	Modification to electrical installation, etc.	• Consumer's LEW inspects and certifies EI fit • Checking by MSSL for EIs exempted under S71 of Electricity Act

Energy Market Authority

Also apply to consumers (residents)

The Electricity (Electrical Installations) Regulations 2002 .....*cont'd*

Part II	Electricity Supply	Remarks
Rg 8	Testing of electrical installation	• EMA may require a consumer to appoint an LEW to inspect & test ANY installation. • LEW to submit inspection & test reports at intervals specified by EMA

Energy Market Authority

The Electricity (Electrical Installations) Regulations 2002 .....*cont'd*

Part II	Electricity Supply	Remarks
Rg 9	Adjustment to electrical installation when interfering with supply to other consumers, etc.	• PGL identifies "problematic" EI. • EMA asks consumer to appoint LEW to take corrective action.

Energy Market Authority

LEW - VD.

The Electricity (Electrical Installations) Regulations 2002 *.....cont'd*

Part II	Electricity Supply	Remarks
Rg 10	Power to disconnect	• Electricity licensee may disconnect supply in the case of non-compliance with Rg 7,8 or 9. • MSSL may direct PGL to disconnect supply in the event of non-payment.

Energy Market Authority

The Electricity (Electrical Installations) Regulations 2002 *.....cont'd*

Part II	Electricity Supply	Remarks
Rg 11	Failure of supply to consumers	• In the event of supply failure arising from fault in transmission system, PGL will rectify fault. • If fault occurs outside transmission system, PGL may charge consumer for attendance

Energy Market Authority

Procedures For Energisation of Supply Line To Tenant's Licensed Electrical Installation for Non-Contestable Consumer

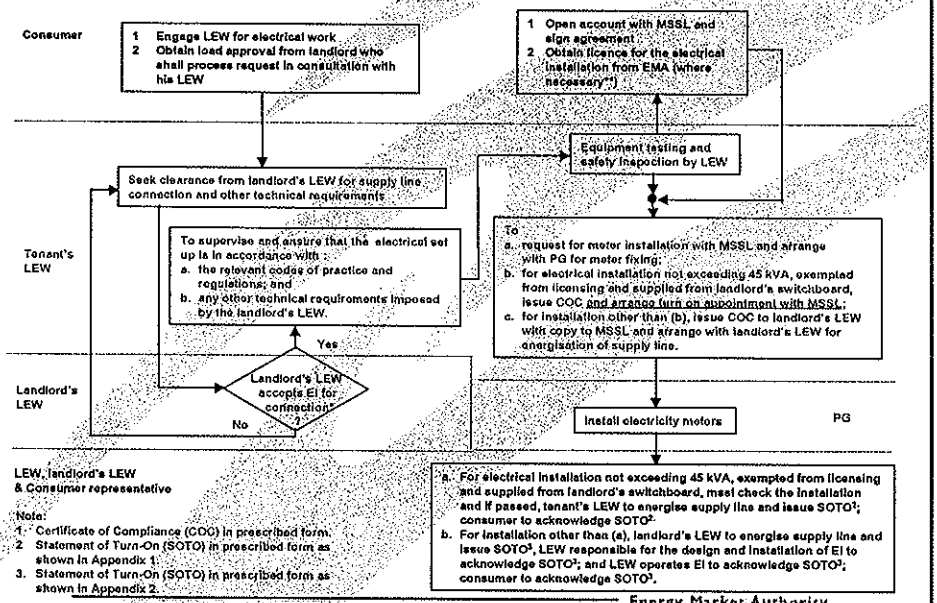

Procedures For Energisation of Supply Line To Tenant's Licensed Electrical Installation for Contestable Consumer

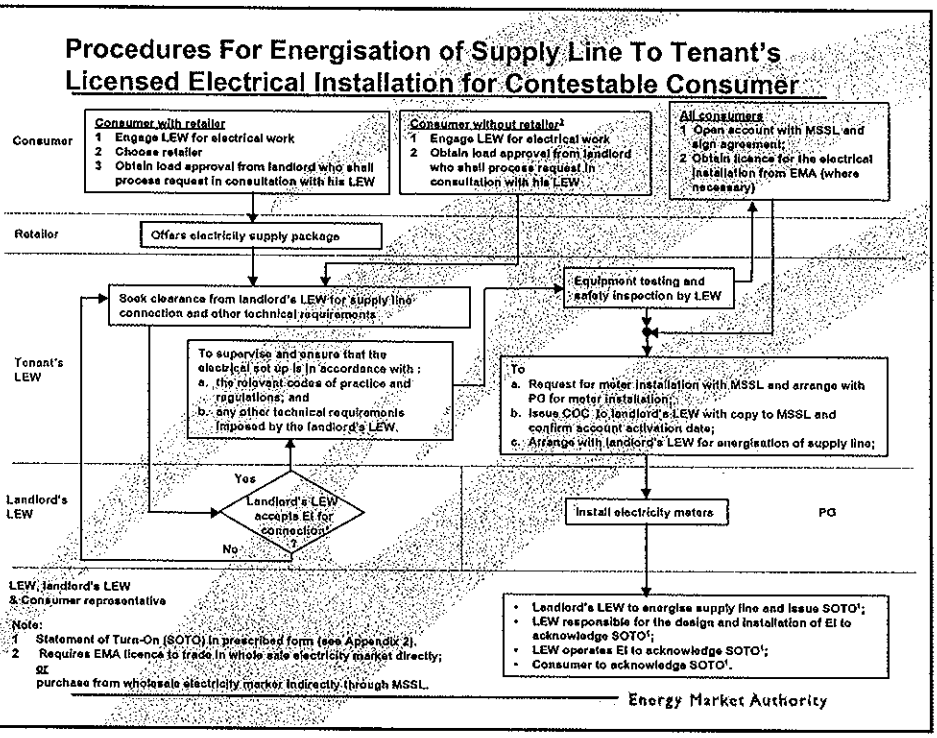

The Electricity (Electrical Installations) Regulations 2002

Part III Electrical Installations

Regulations 12 - 22

ENERGY MARKET AUTHORITY

The Electricity (Electrical Installations) Regulations 2002 *.....cont'd*

Part III	Electrical Installations	Remarks
Rg 12	Person responsible for electrical installation	• EI - *consumer* or *the person having control* of the electrical installation. • SI - owner of the supply installation. • Person responsible appoints LEW

The Electricity (Electrical Installations) Regulations 2002 *.....cont'd*

Part III	Electrical Installations	Remarks
Rg 13	All apparatus, etc., to be of requisite standards	• Wire, cable, fitting & apparatus to comply with standards. • EI - LEWs must ensure that electrical installations comply with SS CP 5. • Temporary installations - LEWs must ensure that these comply with SS CP 88 Parts 1 & 2.

Energy Market Authority

The Electricity (Electrical Installations) Regulations 2002 *.....cont'd*

Part III	Electrical Installations	Remarks
Rg 14	Cable with aluminium conductors not to be used in domestic electrical installation	• Cables with aluminium conductors shall not be used in electrical installations in domestic premises.

Energy Market Authority

The Electricity (Electrical Installations) Regulations 2002 *.....cont'd*

Part III	Electrical Installations	Remarks
Rg 15	Cable for concealed wiring in an installation	• Non-metallic sheathed and non-sheathed cables laid at a depth < 50mm must be mechanically protected. • For sheathed and PVC insulated cables laid at a depth > 50mm, no mechanical protection is required.

Energy Market Authority

The Electricity (Electrical Installations) Regulations 2002 *.....cont'd*

Part III	Electrical Installations	Remarks
Rg 15	Cable for concealed wiring in an installation	• When concealed wiring is used, the EI must be protected by a RCCB. • When doing alteration work, precautions must be taken to prevent damage to concealed wiring. • RCCBs must be tested daily during the course of alteration work.

Energy Market Authority

The Electricity (Electrical Installations) Regulations 2002 *.....cont'd*

Part III	Electrical Installations	Remarks
Rg 16	Authority may require use of high-sensitivity residual current circuit breaker	• EMA may require the use of high-sensitivity RCCBs in any EI and the person responsible for the EI shall comply.

Energy Market Authority

The Electricity (Electrical Installations) Regulations 2002 *.....cont'd*

Part III	Electrical Installations	Remarks
Rg 17	Switchboard	LEW must ensure that: • Adjustable parts are readily accessible • All conductors can be readily traced • SLD is displayed • Current-carrying conductors are easily identified and distinguishable from other conductors • Bare conductors must be placed out of reach to prevent accidental contact.

Energy Market Authority

The Electricity (Electrical Installations) Regulations 2002 .....*cont'd*

Part III	Electrical Installations	Remarks
Rg 17	Switchboard	Party responsible must ensure that: • Switchboard shall be located in a switchroom or an area which is fenced or enclosed • This area or switchroom must only be accessible to the LEW • Notice with "Danger" in 4 languages & operating voltage must be displayed

Energy Market Authority

The Electricity (Electrical Installations) Regulations 2002 .....*cont'd*

Part III	Electrical Installations	Remarks
Rg 17	Switchboard	LEW must ensure that: • All apparatuses pertaining to the switchboard must be arranged so that they can be operated from the switchboard's working platform • All measuring instruments and indicators connected with the apparatuses must be placed so that they can be observed from the working platform

Energy Market Authority

The Electricity (Electrical Installations) Regulations 2002 *.....cont'd*

Part III	Electrical Installations	Remarks
Rg 17	Switchboard	Party responsible shall provide : • Either a working platform or a passage leading to the platform Working platform must be: • Of sound construction with a firm & even floor • Of adequate height & width to facilitate the safe operation or maintenance of the switchboard • Properly maintained and free of obstruction.

Energy Market Authority

The Electricity (Electrical Installations) Regulations 2002 *.....cont'd*

Part III	Electrical Installations	Remarks
Rg 17	Switchboard	LEW shall ensure that: • There is adequate space around the front, sides and back of the switchboard to enable the safe operation, inspection, testing and maintenance of the installation.

Energy Market Authority

The Electricity (Electrical Installations) Regulations 2002 *.....cont'd*

Part III	Electrical Installations	Remarks
Rg 18	High voltage switchboard	In an EI with a HV switchboard, the LEW shall ensure that: • Every HV conductor is so placed or protected that a person standing on the working platform will not be able to touch them. • All metal cases of every apparatus, device, indicator or instrument are earthed.

Energy Market Authority

The Electricity (Electrical Installations) Regulations 2002 *.....cont'd*

Part III	Electrical Installations	Remarks
Rg 18	High voltage switchboard	In an EI with a HV switchboard, the LEW shall ensure that: • All metal handles and metal gears of every HV switch are earthed.

Energy Market Authority

The Electricity (Electrical Installations) Regulations 2002 *.....cont'd*

Part III	Electrical Installations	Remarks
Rg 19	Adequate lighting where apparatus installed	The party responsible for the EI shall provide adequate lighting where an apparatus is installed.

The Electricity (Electrical Installations) Regulations 2002 *.....cont'd*

Part III	Electrical Installations	Remarks
Rg 20	Use of auto-transformers	The LEW shall ensure that: • The lower voltage system in the auto-transformer will not exceed its designated voltage. • The voltage between any part of the lower voltage winding of the auto-transformer and earth will not exceed the voltage between the terminals of the lower voltage winding.

The Electricity (Electrical Installations) Regulations 2002 *.....cont'd*

Part III	Electrical Installations	Remarks
Rg 20	Use of auto-transformers	An auto-transformer shall not be used to supply electricity to: • A socket-outlet • A portable appliance (unless it is an integral part of the appliance) • An electric toy • Any ELV circuit

Energy Market Authority

The Electricity (Electrical Installations) Regulations 2002 *.....cont'd*

Part III	Electrical Installations	Remarks
Rg 20	Use of auto-transformers	An auto-transformer shall not be used to supply electricity to: • A socket-outlet • A portable appliance (unless it is an integral part of the appliance) • An electric toy • Any ELV circuit

Energy Market Authority

The Electricity (Electrical Installations) Regulations 2002 *.....cont'd*

Part III	Electrical Installations	Remarks
Rg 21	Instructions for treatment of electric shock	A consumer shall: • Post instructions in English and in one other language on the proper mode of treating persons suffering from electric shock. • Ensure that the CPR chart must be placed in a conspicuous part of the premises. • Ensure that all employees are familiar with the instructions in the CPR chart.

Energy Market Authority

The Electricity (Electrical Installations) Regulations 2002 *.....cont'd*

Part III	Electrical Installations	Remarks
Rg 22	Supply installation to be operated and used safely	• No person shall operate a supply installation which is likely to cause danger to the public. • EMA may, in writing, notify a licensee to cease operation, if it considers the supply installation likely to endanger the public. • If the notice to cease operation is not complied with, EMA may take action to disable the supply installation.

Energy Market Authority

The Electricity (Electrical Installations) Regulations 2002

Part IV
Work on High Voltage Apparatus

Regulations 23 - 26

ENERGY MARKET AUTHORITY

The Electricity (Electrical Installations) Regulations 2002 *.....cont'd*

Part IV	Work on High Voltage Apparatus	Remarks
Rg 23	Work to be carried out or supervised by authorised high voltage switching engineer or by competent person	(1) Electrical work shall only be carried out or supervised by the AHVSE or a Competent Person (CP) appointed by him.

Energy Market Authority

The Electricity (Electrical Installations) Regulations 2002 *.....cont'd*

Part IV	Work on High Voltage Apparatus	Remarks
Rg 23	Work to be carried out or supervised by authorised high voltage switching engineer or by competent person	(2) The Competent Person appointed by the AHVSE must be a LEW of the appropriate class.

Energy Market Authority

The Electricity (Electrical Installations) Regulations 2002 *.....cont'd*

Part IV	Work on High Voltage Apparatus	Remarks
Rg 24	Duties of authorised high voltage switching engineer before commencement of work.	(1)(a) The AHVSE must ensure that before any work commences, the HV apparatus must be : i) Dead

Energy Market Authority

The Electricity (Electrical Installations) Regulations 2002 *.....cont'd*

Part IV	Work on High Voltage Apparatus	Remarks
Rg 24	Duties of authorised high voltage switching engineer before commencement of work.	ii) Isolated & locked from live conductors iii) Discharged & effectively connected to Earth iv) Effectively screened from all live parts.

Energy Market Authority

The Electricity (Electrical Installations) Regulations 2002 *.....cont'd*

Part IV	Work on High Voltage Apparatus	Remarks
Rg 24	Duties of authorised high voltage switching engineer before commencement of work.	v) generally safe for work to be carried out.

Energy Market Authority

The Electricity (Electrical Installations) Regulations 2002 .....*cont'd*

Part	Work on	Remarks
IV	High Voltage Apparatus	
Rg 24	Duties of authorised high voltage switching engineer before commencement of work.	(1)(b) notice warning against any interference with live apparatus must be displayed.

Energy Market Authority

Notice against any interference

DANGER

This cable between / equipment at

has been isolated and earthed and
SHOULD NOT BE INTERFERED WITH
without the consent of the authorised high voltage switching engineer (AHVSE) who has issued a PERMIT-TO-WORK
No.
on (DATE / TIME)
Signature of AHVSE
Name
Contact No: Tel Pager

(The symbol and text shall be black and background colour shall be yellow. This Notice shall be printed on self-adhesive A6-size paper)

Energy Market Authority

The Electricity (Electrical Installations) Regulations 2002 *.....cont'd*

Part IV	Work on High Voltage Apparatus	Remarks
Rg 24	Duties of authorised high voltage switching engineer before commencement of work.	(1)(c) this warning notice must comply with Reg 17(5) and be affixed in a conspicuous position.

Energy Market Authority

The Electricity (Electrical Installations) Regulations 2002 *.....cont'd*

Part IV	Work on High Voltage Apparatus	Remarks
Rg 24	Duties of authorised high voltage switching engineer before commencement of work.	(1)(d) AHVSE must issue PTWs to CPs, who must read and sign them.

Energy Market Authority

Permit-to-work

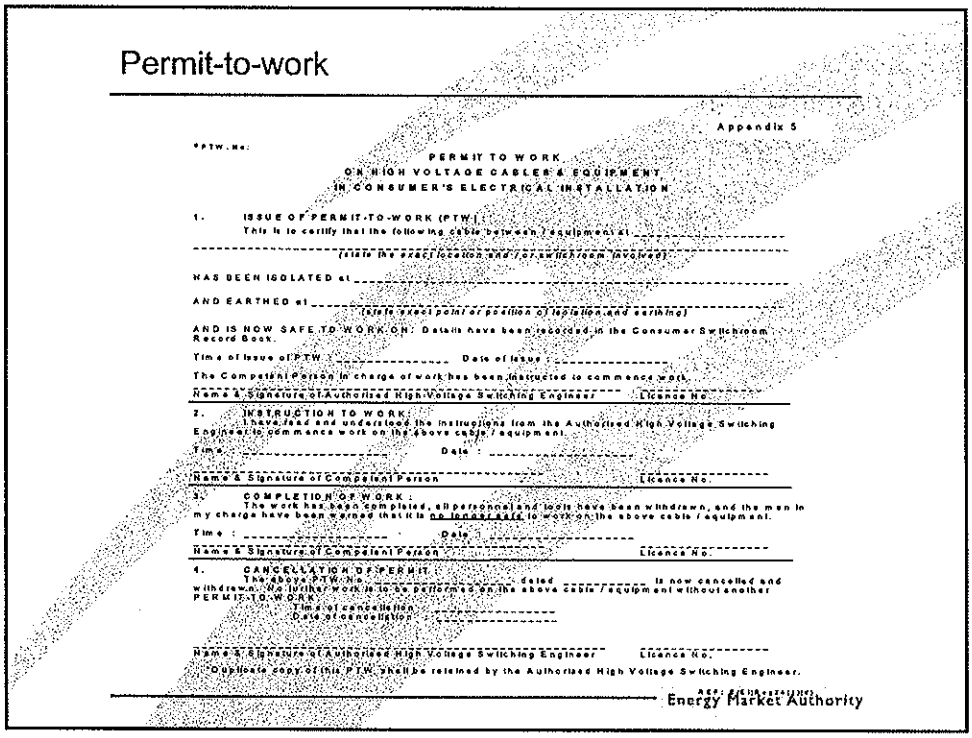

Appendix 5

*PTW. No:

PERMIT TO WORK
ON HIGH VOLTAGE CABLES & EQUIPMENT
IN CONSUMER'S ELECTRICAL INSTALLATION

1. ISSUE OF PERMIT-TO-WORK (PTW)
This is to certify that the following cable between / equipment at _____
_____ (state the exact location and / or switchroom involved)
HAS BEEN ISOLATED at _____
AND EARTHED at _____ (state exact point or position of isolation and earthing)
AND IS NOW SAFE TO WORK ON. Details have been recorded in the Consumer Switchroom Record Book.
Time of issue of PTW : _____ Date of issue : _____
The Competent Person in charge of work has been instructed to commence work.
Name & Signature of Authorised High Voltage Switching Engineer _____ Licence No. _____

2. INSTRUCTION TO WORK:
I have read and understood the instructions from the Authorised High Voltage Switching Engineer to commence work on the above cable / equipment.
Time : _____ Date : _____
Name & Signature of Competent Person _____ Licence No. _____

3. COMPLETION OF WORK :
The work has been completed, all personnel and tools have been withdrawn, and the men in my charge have been warned that it is no longer safe to work on the above cable / equipment.
Time : _____ Date : _____
Name & Signature of Competent Person _____ Licence No. _____

4. CANCELLATION OF PERMIT :
The above PTW No. _____ dated _____ is now cancelled and withdrawn. No further work is to be performed on the above cable / equipment without another PERMIT-TO-WORK.
Time of cancellation : _____
Date of cancellation : _____
Name & Signature of Authorised High Voltage Switching Engineer _____ Licence No. _____

*Duplicate copy of this PTW shall be retained by the Authorised High Voltage Switching Engineer.

Energy Market Authority

The Electricity (Electrical Installations) Regulations 2002 *.....cont'd*

Part IV	Work on High Voltage Apparatus	Remarks
Rg 24	Duties of authorised high voltage switching engineer before commencement of work.	(2) AHVSE must keep copies of all PTWs that he has issued.

Energy Market Authority

The Electricity (Electrical Installations) Regulations 2002 *.....cont'd*

Part IV	Work on High Voltage Apparatus	Remarks
Rg 24	Duties of authorised high voltage switching engineer before commencement of work.	(3) No person shall remove, without AHVSE's consent : • Anything set up to screen off the HV apparatus.

Energy Market Authority

The Electricity (Electrical Installations) Regulations 2002 *.....cont'd*

Part IV	Work on High Voltage Apparatus	Remarks
Rg 24	Duties of authorised high voltage switching engineer before commencement of work.	(3) No person shall remove, without AHVSE's consent : • The warning notice.

Energy Market Authority

The Electricity (Electrical Installations) Regulations 2002 *.....cont'd*

Part IV	Work on High Voltage Apparatus	Remarks
Rg 24	Duties of authorised high voltage switching engineer before commencement of work.	(4) the keys of all safety locks shall be kept by the AHVSE during the course of the work.

The Electricity (Electrical Installations) Regulations 2002 *.....cont'd*

Part IV	Work on High Voltage Apparatus	Remarks
Rg 25	Duties of authorised high voltage switching engineer upon completion of work.	(1)(a) ensures that all tools, including any temporary local earthing connections, are removed.

The Electricity (Electrical Installations) Regulations 2002 *.....cont'd*

Part IV	Work on High Voltage Apparatus	Remarks
Rg 25	Duties of authorised high voltage switching engineer upon completion of work.	(1)(b) ensures that CPs sign "completion of work" portion of PTWs and return them for cancellation.

The Electricity (Electrical Installations) Regulations 2002 *.....cont'd*

Part IV	Work on High Voltage Apparatus	Remarks
Rg 25	Duties of authorised high voltage switching engineer upon completion of work.	(2) on receipt of "completion of work" portion of PTWs from CP, AHVSE shall cancel PTW by specifying date & time on PTW.

The Electricity (Electrical Installations) Regulations 2002 *.....cont'd*

Part IV	Work on High Voltage Apparatus	Remarks
Rg 26	Where apparatus connected to source of supply of electricity outside control of authorised high voltage switching engineer.	(1) Before commencement of work, AHVSE shall obtain SDR from person in control of the source of electricity.

Energy Market Authority

The Electricity (Electrical Installations) Regulations 2002 *.....cont'd*

Part IV	Work on High Voltage Apparatus	Remarks
Rg 26	Where apparatus connected to source of supply of electricity outside control of authorised high voltage switching engineer.	(2) The SDR must be in a form approved by EMA.

Energy Market Authority

The Electricity (Electrical Installations) Regulations 2002 *.....cont'd*

Part	Work on	Remarks
IV	High Voltage Apparatus	
Rg 26	Where apparatus connected to source of supply of electricity outside control of authorised high voltage switching engineer.	(3)(a) The person in control must ensure i) that electricity supply is disconnected from HV apparatus before issuing SDR and ii) AHVSE's agreement must be sought before reconnection.

Energy Market Authority

Statement of Disconnection and Reconnection

+Certificate No:

STATEMENT OF DISCONNECTION AND RECONNECTION OF SOURCE OF ELECTRICITY FOR ELECTRICAL INSTALLATION TAKING HIGH VOLTAGE SUPPLY FROM ANOTHER ELECTRICAL INSTALLATION

The following statements concern the disconnection and reconnection of the supply line specified below from the source of electricity. Each statement shall be valid only when it is signed by both the Authorised High Voltage Switching Engineer (AHVSE) and the person having control of the source of electricity.

The incoming supply line No:_____

of (name of installation) _____ (Licence No: _____)

is to be isolated from the source of electricity

at (name of installation) _____ (Licence No: _____).

This disconnection of the above-mentioned supply line

from the source of electricity is requested by: (Name) _____

PART I : STATEMENT OF DISCONNECTION OF SOURCE OF ELECTRICITY

TIME:_____ DATE: _____

DECLARATION BY PERSON HAVING CONTROL OF THE SOURCE OF ELECTRICITY : I, the undersigned, declare that the above supply line has been safely isolated from the source of electricity and will not be reconnected without the prior written agreement of the AHVSE for the above first-named installation.

SIGNATURE:_____ NAME:_____ LICENCE NO:_____

DECLARATION BY AHVSE : I, the undersigned, declare that the above supply line has been safely isolated from the above first-named installation.

SIGNATURE:_____ NAME:_____ LICENCE NO:_____

PART II: WRITTEN AGREEMENT FOR RECONNECTION TO SOURCE OF ELECTRICITY

TIME: _____ DATE:_____

DECLARATION BY AHVSE : I, the undersigned, declare that the above first-named installation to which the above supply line is connected, is cleared of all earthing leads, labour and tools, and that the supply line is safe for reconnection to the source of electricity with effect from the time specified above. I undertake to ensure that no work by any person will be carried out on any apparatus that is connected to the above supply line until a new statement is signed by both parties.

SIGNATURE:_____ NAME:_____ LICENCE NO:_____

Energy Market Authority

The Electricity (Electrical Installations) Regulations 2002

Part V
Licensing of Electrical and Supply Installations

Regulations 27 - 39

ENERGY MARKET AUTHORITY

The Electricity (Electrical Installations) Regulations 2002 *.....cont'd*

Part V	Licensing of Electrical and Supply Installations	Remarks
Rg 27	Licence to use or operate electrical or supply installations	EMA may issue a new licence or renew an existing one upon payment of the appropriate fee specified in the Schedule.

Energy Market Authority

Fees Related to Licensing of Electrical Supply Installations

THE SCHEDULE
Regulations 27, 28(2), 35 and 39
FEES

1.	Fee payable for the grant or renewal of a licence to use or operate an electrical installation for a period of 12 months	$100
2.	Fee payable for the grant or renewal of a licence to use or operate a supply installation for a period of 12 months	$150

Energy Market Authority

Fees Related to Licensing of Electrical Supply Installations

THE SCHEDULE
Regulations 27, 28(2), 35 and 39
FEES

3.	Fee payable for the grant of a licence to use or operate an electrical installation or a supply installation for a period of 3 months	$50

Energy Market Authority

The Electricity (Electrical Installations) Regulations 2002 *.....cont'd*

Part	Licensing of Electrical and Supply Installations	Remarks
V	Rg 28 Application for licence or renewal of licence	(1) Application for an EI or a SI shall be submitted by a LEW employed or appointed by the applicant. (2) Each application shall be submitted with the fee in a form provided by EMA

Energy Market Authority

The Electricity (Electrical Installations) Regulations 2002 *.....cont'd*

Part	Licensing of Electrical and Supply Installations	Remarks
V	Rg 28 Application for licence or renewal of licence	(3) Application for renewal an EI or a SI shall be submitted not later than one month before expiry of the licence.

Energy Market Authority

The Electricity (Electrical Installations) Regulations 2002 *.....cont'd*

Part V Licensing of Electrical and Supply Installations		Remarks
Rg 28	Application for licence or renewal of licence	(4) No EI or SI licence will be granted unless LEW does the following : (a) declares that he an employee or that he is duly appointed by the applicant;

Energy Market Authority

The Electricity (Electrical Installations) Regulations 2002 *.....cont'd*

Part V Licensing of Electrical and Supply Installations		Remarks
Rg 28	Application for licence or renewal of licence	(4) No EI or SI licence will be granted unless LEW does the following : (b) inspects and tests the installation; (c) issues a Certificate of Fitness;

Energy Market Authority

The Electricity (Electrical Installations) Regulations 2002 .....*cont'd*

Part V	Licensing of Electrical and Supply Installations	Remarks
Rg 28	Application for licence or renewal of licence	(4) No EI or SI licence will be granted unless LEW does the following : (d) submits a Single-Line Drawing or provides a written undertaking;

Energy Market Authority

The Electricity (Electrical Installations) Regulations 2002 .....*cont'd*

Part V	Licensing of Electrical and Supply Installations	Remarks
Rg 28	Application for licence or renewal of licence	(4) No EI or SI licence will be granted unless LEW does the following : (e) provides a written undertaking to inspect the installation regularly and submits the Inspection Report;

Energy Market Authority

The Electricity (Electrical Installations) Regulations 2002 .....cont'd

Part	Licensing of Electrical and Supply Installations	Remarks
V	Rg 28 Application for licence or renewal of licence	(5) LEWs shall keep records of the following : • Documents relating to his employment • Letters of Appointment issued by licensees

Energy Market Authority

The Electricity (Electrical Installations) Regulations 2002 .....cont'd

Part	Licensing of Electrical and Supply Installations	Remarks
V	Rg 28 Application for licence or renewal of licence	(6) EMA may, at its discretion, reject an application for an EI or SI licence

Energy Market Authority

The Electricity (Electrical Installations) Regulations 2002 *.....cont'd*

Part V Licensing of Electrical and Supply Installations		Remarks
Rg 30	Licence to subject to conditions, etc.	The licence will be valid for the period stated in the licence, unless the licence has been revoked or suspended.

Energy Market Authority

The Electricity (Electrical Installations) Regulations 2002 *.....cont'd*

Part V Licensing of Electrical and Supply Installations		Remarks
Rg 31	Notification to Authority of change of address.	The licence will be valid for the period stated in the licence, unless the licence has been revoked or suspended.

Energy Market Authority

The Electricity (Electrical Installations) Regulations 2002 *.....cont'd*

Part	Licensing of Electrical and Supply Installations	Remarks
Rg 32	Duty of licensed electrical worker	Upon approval of an EI or SI, EMA will notify the LEW. LEW shall retrieve and print the electronic record of the EI or SI and forward it to the licensee within 7 working days.

The Electricity (Electrical Installations) Regulations 2002 *.....cont'd*

Part	Licensing of Electrical and Supply Installations	Remarks
Rg 33	Display of licence	The licensee shall display EI or SI in a conspicuous position. The Single-Line Drawing shall be displayed adjacent to the main incoming switchboard.

The Electricity (Electrical Installations) Regulations 2002 *.....cont'd*

Part	Licensing of Electrical and Supply Installations	Remarks
V		
Rg 34	Reduction of period of suspension	EMA may, at its discretion, reduce the period of suspension of an EI or SI licence.

Energy Market Authority

The Electricity (Electrical Installations) Regulations 2002 *.....cont'd*

Part	Licensing of Electrical and Supply Installations	Remarks
V		
Rg 35	Replacement licence	In the event that an EI or SI licence is lost, destroyed or defaced, EMA may issue a replacement.

Energy Market Authority

Fees Related to Licensing of Electrical Supply Installations

THE SCHEDULE
Regulations 27, 28(2), 35 and 39
FEES

4.	Fee payable for a replacement licence	$20.80

Energy Market Authority

The Electricity (Electrical Installations) Regulations 2002 .....*cont'd*

Part V	Licensing of Electrical and Supply Installations	Remarks
Rg 36	Licensee to inform Authority of cessation of employment by him of licensed electrical worker	(1) In the event that a licensee terminates the services of its LEW, the licensee must : • Inform EMA. • Appoint another LEW.

Energy Market Authority

The Electricity (Electrical Installations) Regulations 2002 *.....cont'd*

Part V Licensing of Electrical and Supply Installations		Remarks
Rg 36	Licensee to inform Authority of cessation of employment by him of licensed electrical worker	(2) In the event that a LEW is unable to temporarily perform his duties, he must : • Inform EMA. • Appoint a stand-in LEW.

Energy Market Authority

The Electricity (Electrical Installations) Regulations 2002 *.....cont'd*

Part V Licensing of Electrical and Supply Installations		Remarks
Rg 36	Licensee to inform Authority of cessation of employment by him of licensed electrical worker	(3) The appointment of the new or stand-in LEW must be approved by EMA.

Energy Market Authority

The Electricity (Electrical Installations) Regulations 2002 *.....cont'd*

Part V	Licensing of Electrical and Supply Installations	Remarks
Rg 36	Licensee to inform Authority of cessation of employment by him of licensed electrical worker	(4) & (5) The records maintained shall be updated to reflect the current situation.

The Electricity (Electrical Installations) Regulations 2002 *.....cont'd*

Part V	Licensing of Electrical and Supply Installations	Remarks
Rg 37	Production of electrical or supply installation licence and giving of information to authorised officer.	An authorised officer of EMA may obtain the following information from a person responsible for an EI or SI : • the EI or SI licence for inspection. • Any other information relating to the operation of the EI or SI

The Electricity (Electrical Installations) Regulations 2002 .....*cont'd*

Part V	Licensing of Electrical and Supply Installations	Remarks
Rg 38	Register of electrical and supply installation licences	EMA shall maintain a register known as the Register of Electrical and Supply Installation Licences

Energy Market Authority

The Electricity (Electrical Installations) Regulations 2002 .....*cont'd*

Part V	Licensing of Electrical and Supply Installations	Remarks
Rg 39	Information from register of electrical and supply installation licences	EMA shall furnish any person with information relating to an EI or SI licence, provided that person makes a request in writing and pays the appropriate fee.

Energy Market Authority

Fees Related to Licensing of Electrical Supply Installations

THE SCHEDULE
Regulations 27, 28(2), 35 and 39
FEES

5.	Fee payable for information as to whether or not a person is a holder of a licence to use or operate any electrical or supply installation	$5

Energy Market Authority

The Electricity (Electrical Installations) Regulations 2002

Part VI
Miscellaneous

Regulation 40

ENERGY MARKET AUTHORITY

The Electricity (Electrical Installations) Regulations 2002 .....*cont'd*

Part VI	Miscellaneous	Remarks
Rg 40	Penalties	• For a majority of offences, the maximum fine is $5000. • On conviction for contravention of Rg 15(4), the following penalties apply : i) max fine $5000 ii) max 6-month jail term iii) both fine & jail term

The Electricity (Electrical Installations) Regulations 2002 .....*cont'd*

Part VI	Miscellaneous	Remarks
Rg 40	Penalties	• On conviction for contravention of Rg 37, the following penalties apply : i) max fine $5000 ii) max 12-month jail term iii) both fine & jail term

The Electricity (Electrical Installations) Regulations 2002 .....*cont'd*

Part	Miscellaneous	Remarks
VI		
	Rg 41 Revocation	The three pieces of legislation under the Public Utilities Act were revoked on 1st Jan 2003

Energy Market Authority

The Revocation of Regulations on 01.01.2003

The following Regulations were revoked:

1 The Public Utilities Act (Cap. 261)

1.1 The Public Utilities (Electricity) Regulations 1997

1.2 The Public Utilities (Electricity Supply) Regulations 1997

1.3 The Public Utilities (Licence to Use or Operate Electrical or Supply Installations) Regulations 1997

Energy Market Authority

THANK YOU FOR YOUR KIND ATTENTION



Energy Market Authority