Carrier®

42C/D SERIES

Ducted Chilled Water Fan Coil Unit With District Cooling Application

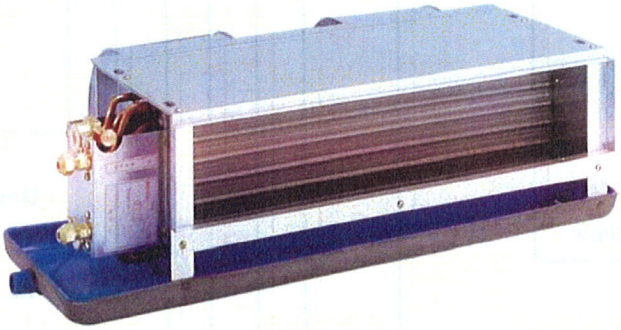

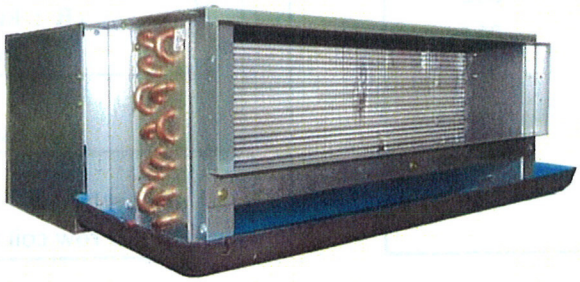

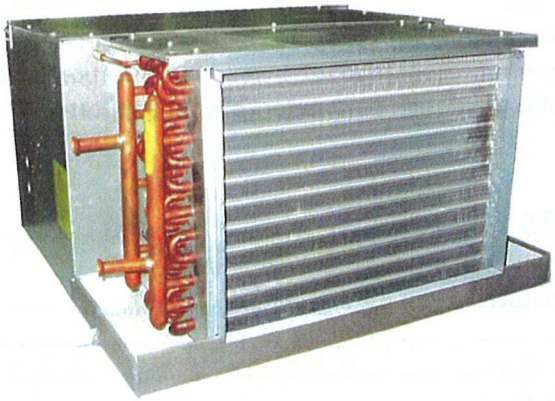

QUALITY SYSTEM SIRIM

UKAS QUALITY MANAGEMENT 074 - A

MS ISO 9001 REG. NO. AR 0239

MAXIMIZING PERFORMANCE, ENERGY SAVINGS & COMFORT

MODEL NUMBER NOMENCLATURE

Carrier
Turn to the Experts.

4 2 C E T 0 0 3 4 - - 7 0 1 2 5

42 series
Fan Coil Unit

Model

CET	Std
DC-	
CED	ΔT District
DCD	Cooling

Model No.

42CET & CED	42DC & DCD
003	010
004	012
005	014
006	016
008	018
010	020
012	
014	

CISB Code
25

Packing method
1

Development Series
0 : 42CET / 42CED
3 : 42DC / 42DCD

Electrical Characteristic
7 - 220/240V-1PH-50Hz

R : Right Handling
- : Left Handling

Not used

3 : 3 row coil (42CET)
4 : 4 row coil (42CET, CED, DC, DCD)

COMPUTER SELECTION

We have made available a computer program to finalize your selections. Please contact your Carrier representative for a computer selection based on your "Quick Selection" plus the design parameters of your application.



TABLE OF CONTENTS

	Page
Model Number Nomenclature	2
Product Features	3
Technical Data	4 – 8
Unit Dimension and Weight	9 – 10
Performance Rating	11 – 12
Selection Procedure	13 – 14
Wiring Diagram	15
Guide Specifications	16

PRODUCT FEATURES

Carrier
Turn to the Experts.

If fan coil terminals are the answer to your job requirements, you can't afford to pass over Carrier's versatile and extensive range of fan coil units.

With Carrier's 42 series fan coil units, you can select furred-in or cabinet style, in capacities from 300 to 1,400 cfm. Units are ideal for installations in hotels, models, apartments and other multi-room buildings.

Carrier room fan coil terminals provide unsurpassed year round comfort, with high cooling performance. Carrier 42CET terminal requires very little space and is easy to install. Piping, drain and wiring connections are readily accessible to save installation time and field labor expense.

Forget about expensive ductwork, forget about complex system controls, forget the aggravation and choose Carrier's easy to install room fan coil units – in pipe systems. Opt for quiet. Carrier room fan coil units operate at exceptionally low sound levels. Generous amount of insulation absorbs operating sound and rugged, rigid construction ensures vibration free operation at all fan speeds.

Carrier room fan coil units are economical. Three speed fans deliver just the right amount of conditioned air for your comfort needs at any load. And each individual unit can be shut off when not in use. Shaded-pole motors deliver peak operating efficiency. In choosing Carrier units, you can match your application with a wide range of custom-designed options and accessories, including electric heat.

When you go for Carrier 42CET, the advantages to owner, installer and the room occupants are too great to ignore.

Carrier 42CET fan coils give you design and equipment location flexibility

- Wide range of popular capacities, 300 – 1400 cfm
- Up to 8 sizes
- Cabinet or furred-in units
- Choose from numerous control systems
- Select 3 or 4 row coils
- Accommodates 2 pipe systems
- Fully insulated/low fan speed means quiet operation
- Draw outside air for odor dilution
- Attractive unit design blends with room decoration
- Uses only minimal space

Select Carrier fan coils for easy, low cost installation

- Easy wiring, piping connections
- Mounting holes, slots speed hanging
- Requires no expensive ductwork
- Ideal for new construction or renovation

Save operating costs with Carrier fan coils

- Individual unit shut-off when not in use
- Efficient, 3 speed centrifugal fans
- Shaded pole motors
- High efficiency heat transfer surface

Carrier fan coils save you service and maintenance expense

- Nationwide Carrier service
- Insulated drain pan
- Easy access to components
- Rugged construction
- Factory leak test
- Cleanable or throwaway filters
- Long life, heavy duty bearings

Carrier
Turn to the Experts.

42CET Furred-in Ceiling FCU with Plenum
3 Rows at nominal CFM

PERFORMANCE			MODEL: 42CET							
			003	004	005	006	008	010	012	014
Air Volume	High	CFM	300	400	500	600	800	1000	1200	1400
		L/s	142	189	236	283	378	472	566	661
Cooling Capacity (Fluid)*		kW	2.79	3.48	3.80	4.79	6.68	7.71	8.90	10.95
		Btu/hr	9519	11874	12966	16343	22792	26307	30367	37361
Motor nominal power output		W	35	48	68	75	58w x 2	68w x 2	75w x 2	78w x 3
Motor nominal current		Amp	0.37	0.44	0.55	0.65	1.02	1.10	1.30	2.04
Noise *	High	dB(A)	39.0	40.0	41.3	41.2	41.8	43.9	43.7	44.9
	Med		36.0	38.2	36.7	40.0	39.3	41.5	42.7	41.7
	Low		33.4	34.7	36.1	37.8	36.2	39.8	40.8	40.1
Water Flow		L/s	0.120	0.150	0.163	0.206	0.287	0.331	0.383	0.471
Water Drop		kPa	22.5	11.9	14.8	23.8	23.6	31.9	14.9	23.7
Fan Type			Centrifugal Forward-curved blades							
Motor Type			Permanent Split Capacitor							
Coil	Row		3							
	Working Pressure		1.6 MPa							
Connections	In-Out		¾" FPT							
	Condensing Drain		¾" MPT							
Net Weight		Kg	18.8	21.9	23.2	25.5	34.1	37.7	42.8	49.9

NOTE:

* Based on motor at high speed, standard air and dry coil operation, external static pressure of 50Pa; 5.6˚C water temperature rise; entering air temperature 27˚C DB; 19˚C WB; Entering water temperature 7.2˚C.

** Sound measurement in accordance with Standard JIS8616-2006 (1.5m below the unit bottom).

Carrier
Turn to the Experts.

42CET Furred-in Ceiling FCU with Plenum
4 Rows at nominal CFM

PERFORMANCE			MODEL: 42CET							
			003	004	005	006	008	010	012	014
Air Volume	High	CFM	300	400	500	600	800	1000	1200	1400
		L/s	142	189	236	283	378	472	566	661
Cooling Capacity (Fluid)*		kW	2.87	3.95	4.28	4.87	7.25	8.44	10.54	12.81
		Btu/hr	9792	13477	14603	16616	24737	28797	35962	43708
Motor nominal power output		W	35	48	68	75	58w x 2	68w x 2	75w x 2	78w x 3
Motor nominal current		Amp	0.37	0.44	0.55	0.65	1.02	1.10	1.30	2.04
Noise *	High	dB(A)	39.0	40.0	41.3	41.2	41.8	43.9	43.7	44.9
	Med		36.0	38.2	36.7	40.0	39.3	41.5	42.7	41.7
	Low		33.4	34.7	36.1	37.8	36.2	39.8	40.8	40.1
Water Flow		L/s	0.124	0.168	0.183	0.209	0.312	0.365	0.454	0.551
Water Drop		kPa	9.8	18.1	22.2	7.4	17.9	25.3	23.8	37.3
Fan Type			Centrifugal Forward-curved blades							
Motor Type			Permanent Split Capacitor							
Coil	Row		4							
	Working Pressure		1.6 MPa							
Connections	In-Out		¾" FPT							
	Condensing Drain		¾" MPT							
Net Weight		Kg	19.9	23.1	24.5	26.5	35.9	39.7	45.1	52.4

NOTE:

* Based on motor at high speed, standard air and dry coil operation, external static pressure of 50Pa; 5.6°C water temperature rise; entering air temperature 27°C DB; 19°C WB; Entering water temperature 7.2°C.

** Sound measurement in accordance with Standard JIS8616-2006 (1.5m below the unit bottom).

42CED ΔT Furred-in Ceiling FCU with Plenum
4 Rows at nominal CFM

PERFORMANCE			MODEL: 42CED							
			003	004	005	006	008	010	012	014
Air Volume	High	CFM	300	400	500	600	800	1000	1200	1400
		L/s	142	189	236	283	378	472	566	661
Cooling Capacity (Fluid)*		kW	2.23	3.22	3.53	3.61	5.63	6.50	8.27	9.10
		Btu/hr	7609	10987	12044	12317	19210	22178	28217	31049
Motor nominal power output		W	35	48	68	75	58w x 2	68w x 2	75w x 2	78w x 3
Motor nominal current		Amp	0.37	0.44	0.55	0.65	1.02	1.10	1.30	2.04
Noise *	High	dB(A)	39.0	40.0	41.3	41.2	41.8	43.9	43.7	44.9
	Med		36.0	38.2	36.7	40.0	39.3	41.5	42.7	41.7
	Low		33.4	34.7	36.1	37.8	36.2	39.8	40.8	40.1
Water Flow		L/s	0.060	0.086	0.095	0.097	0.151	0.175	0.233	0.245
Water Drop		kPa	8.8	18.5	22.7	7.7	20.2	13.5	23.3	15.2
Fan Type			Centrifugal Forward-curved blades							
Motor Type			Permanent Split Capacitor							
Coil	Row		4							
	Working Pressure		1.6 MPa							
Connections	In-Out		¾" FPT							
	Condensing Drain		¾" MPT							
Net Weight		Kg	19.9	23.1	24.5	26.5	35.9	39.7	45.1	52.4

NOTE:

* Based on motor at high speed, standard air and dry coil operation, external static pressure of 50Pa; 8.9˚C water temperature rise; entering air temperature 23.9˚C DB; 14.4˚C WB; Entering water temperature 5.5˚C.

** Sound measurement in accordance with Standard JIS8616-2006 (1.5m below the unit bottom).

42DC Furred-in Ceiling FCU with Plenum
4 Rows at nominal CFM

PERFORMANCE			MODEL: 42DC					
			010	012	014	016	018	020
Air Volume	High	CFM	996	1299	1422	1894	1909	2007
		L/s	970	613	671	894	901	947
Cooling Capacity (Fluid)*		kW	9.3	12.3	13.7	17.6	17.9	19.4
		Btu/hr	31733	41969	46746	60054	61077	66196
Motor nominal power output		W	200	120x2	120x2	200x2	200x2	200x2
Motor nominal current		Amp	2.39	1.15x2	1.15x2	2.39x2	2.39x2	2.39x2
Noise *	High	dB(A)	47.6	47.6	47.6	54.3	51.8	52.1
	Med		45.5	44.5	44.8	52.8	49.5	49.4
	Low		40.6	42.4	41.0	47.6	45.3	45.2
Water Flow		L/s	0.4	0.5	0.6	0.8	0.8	0.8
Water Drop		kPa	23.8	41.5	29.8	50.5	25.2	30.8
Fan Type			Centrifugal Forward-curved blades					
Motor Type			Permanent Split Capacitor					
Coil	Row		4					
	Working Pressure		1.6 MPa					
Connections	In-Out		7/8"	7/8"	1 1/8"	1 1/8"	1 1/8"	1 1/8"
	Condensing Drain		7/8"					
Net Weight		Kg	66	76	79	81	88	100

NOTE:

* Based on motor at high speed, standard air and dry coil operation, external static pressure of 50Pa; 5.6˚C water temperature rise; entering air temperature 27˚C DB; 19˚C WB; Entering water temperature 7.2˚C.

** Sound measurement in accordance with Standard JIS8616-2006 (1.5m below the unit bottom).

42DCD ΔT Furred-in Ceiling FCU with Plenum
4 Rows at nominal CFM

PERFORMANCE			MODEL: 42DCD					
			010	012	014	016	018	020
Air Volume	High	CFM	996	1299	1422	1894	1909	2007
		L/s	970	613	671	894	901	947
Cooling Capacity (Fluid)*		kW	9.3	12.3	13.7	17.6	17.9	19.4
		Btu/hr	31733	41969	46746	60054	61077	66196
Motor nominal power output		W	200	120x2	120x2	200x2	200x2	200x2
Motor nominal current		Amp	2.39	1.15x2	1.15x2	2.39x2	2.39x2	2.39x2
Noise *	High	dB(A)	47.6	47.6	47.6	54.3	51.8	52.1
	Med		45.5	44.5	44.8	52.8	49.5	49.4
	Low		40.6	42.4	41.0	47.6	45.3	45.2
Water Flow		L/s	0.4	0.5	0.6	0.8	0.8	0.8
Water Drop		kPa	23.8	41.5	29.8	50.5	25.2	30.8
Fan Type			Centrifugal Forward-curved blades					
Motor Type			Permanent Split Capacitor					
Coil	Row		4					
	Working Pressure		1.6 MPa					
Connections	In-Out		7/8"	7/8"	1 1/8"	1 1/8"	1 1/8"	1 1/8"
	Condensing Drain		7/8"					
Net Weight		Kg	66	76	79	81	88	100

NOTE:

* Based on motor at high speed, standard air and dry coil operation, external static pressure of 50Pa; 5.6˚C water temperature rise; entering air temperature 27˚C DB; 19˚C WB; Entering water temperature 7.2˚C.

** Sound measurement in accordance with Standard JIS8616-2006 (1.5m below the unit bottom).

Carrier
Turn to the Experts.

42CET/CED Furred-in Ceiling FCU with Plenum

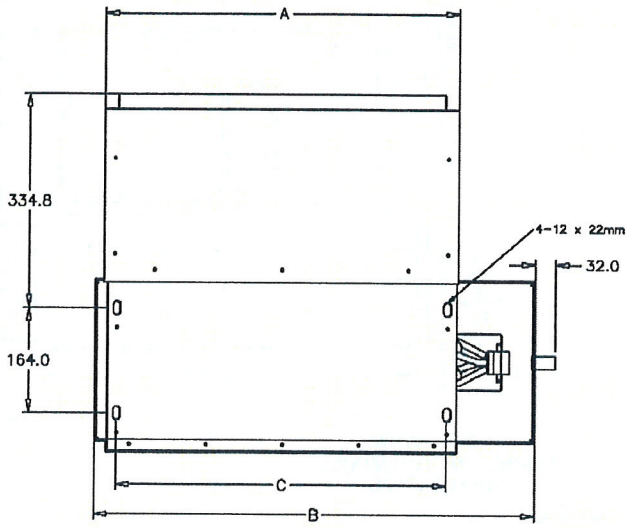

TOP VIEW

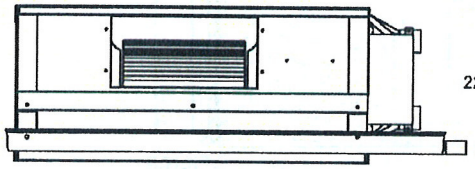

FRONT VIEW

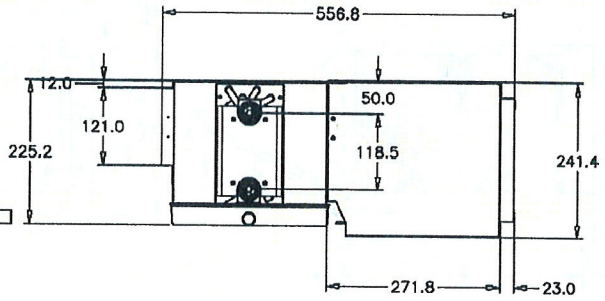

HEADER SIDE

MODEL 42CET/CED	DIMENSIONS (mm)			WEIGHT (kg)	
	A	B	C	3 Rows	4 Rows
003	636	770	600	18.8	19.9
004	756	890	720	21.9	23.1
005	836	970	800	23.2	24.5
006	956	1090	920	25.5	26.5
008	1276	1410	1240	34.1	35.9
010	1396	1530	1360	37.7	39.7
012	1636	1770	1600	42.8	45.1
014	1876	2010	1840	49.9	52.4

Carrier
Turn to the Experts.

42DC/DCD Furred-in ceiling FCU with Plenum

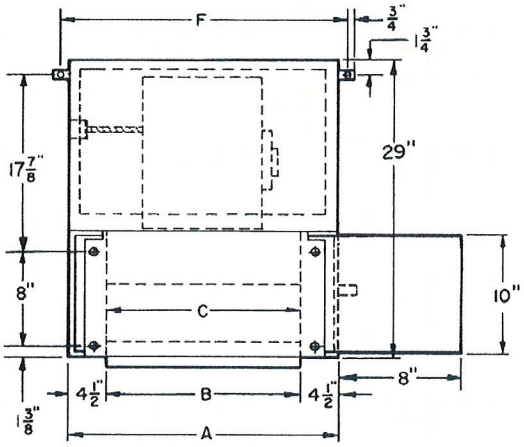

TOP VIEW
(SIZES 06-10)

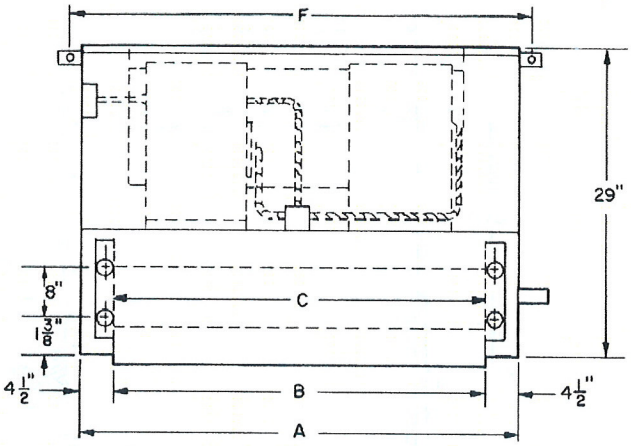

TOP VIEW
DOUBLE MOTOR MODEL
(SIZES 12-20)

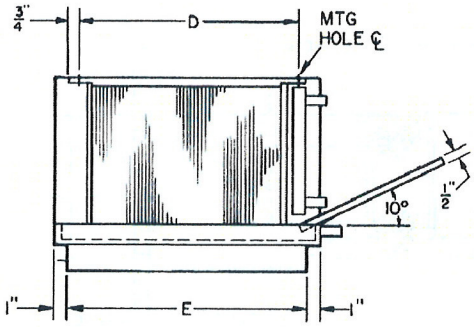

FRONT VIEW

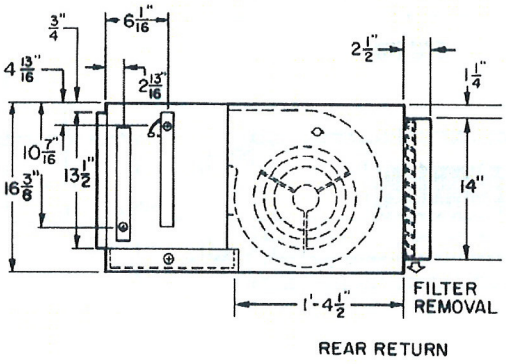

REAR RETURN

SIDE VIEW

UNIT SIZE 42DC/DCD	DIMENSION (mm)						WEIGHT (kg)
	A	B	C	D	E	F	
010	813	584	610	660	762	870	68
012	940	711	737	787	889	997	76
014	1067	838	864	914	1016	1124	79
016	1194	965	991	1041	1143	1251	81
018	1321	1092	1178	1168	1270	1378	88
020	1422	1194	1219	1270	1372	1479	100

PERFORMANCE RATING

Carrier
Turn to the Experts.

42CET (3-ROWS)

Model 42CET	Speed	ESP Pa	Air Flow (L/s)	Capacity (kW)		Air off FCU (°C)		Water Flow (L/s)	Water Pressure (kPa)
				Total	Sensible	DB	WB		
003	High	50	141	2.79	2.14	14.6	13.3	0.120	22.5
	Medium		108	2.33	1.74	13.8	12.7	0.100	16.3
	Low		72	1.73	1.25	12.7	11.8	0.070	9.8
004	High	50	194	3.48	2.77	15.4	13.9	0.150	11.9
	Medium		142	2.83	2.18	14.5	13.3	0.120	8.3
	Low		91	2.05	1.53	13.3	12.4	0.088	4.8
005	High	50	199	3.80	2.94	14.9	13.5	0.163	14.8
	Medium		150	3.13	2.36	14.1	12.9	0.135	10.4
	Low		100	2.30	1.70	13.1	12.2	0.099	6.0
006	High	50	251	4.79	3.68	15.0	13.5	0.206	23.8
	Medium		208	4.22	3.18	14.5	13.1	0.181	18.9
	Low		159	3.48	2.57	13.8	12.6	0.150	13.7
008	High	50	352	6.68	5.14	15.1	13.6	0.287	23.6
	Medium		295	5.94	4.48	14.6	13.2	0.255	19.0
	Low		194	4.39	3.22	13.5	12.4	0.189	11.0
010	High	50	408	7.71	5.89	15.2	13.6	0.331	31.9
	Medium		302	6.27	4.66	14.4	13.0	0.270	22.1
	Low		230	5.11	3.74	13.7	12.5	0.220	15.2
012	High	50	500	8.90	6.99	15.6	13.9	0.383	14.9
	Medium		422	7.95	6.14	15.1	13.6	0.342	12.3
	Low		336	6.79	5.15	14.5	13.2	0.292	9.3
014	High	50	610	10.95	8.53	15.6	13.9	0.471	23.7
	Medium		464	9.10	6.91	14.8	13.3	0.391	17.2
	Low		385	7.99	5.97	14.3	13.0	0.340	13.6

NOTE: Air Conditions: EDB/EWB 27/29°C Water Conditions: EWT/LWT 7.2/12.8°C ΔT: 5.6°C

42CET (4-ROWS)

Model 42CET	Speed	ESP (Pa)	Air Flow (L/s)	Capacity (kW)		Air off FCU (°C)		Water Flow (L/s)	Water Pressure (kPa)
				Total	Sensible	DB	WB		
003	High	50	133	2.23	1.80	12.9	12.1	0.060	8.788
	Medium		103	1.87	1.47	12.2	11.6	0.050	6.546
	Low		69	1.39	1.07	11.2	10.9	0.037	2.511
004	High	50	183	3.22	2.52	12.7	11.83	0.086	18.532
	Medium		135	2.62	1.99	11.8	11.2	0.071	12.704
	Low		88	1.91	1.41	10.8	10.4	0.051	7.293
005	High	50	188	3.53	2.69	12.2	11.4	0.095	22.717
	Medium		143	2.92	2.18	11.4	10.8	0.079	16.440
	Low		96	2.15	1.57	10.5	10.1	0.058	9.296
006	High	50	237	3.61	2.95	13.7	12.6	0.097	7.742
	Medium		198	3.19	2.56	13.3	12.3	0.086	6.187
	Low		153	2.64	2.09	12.7	11.9	0.071	4.484
008	High	50	332	5.63	4.36	13.2	12.0	0.151	20.176
	Medium		281	5.03	3.83	12.7	11.7	0.135	16.649
	Low		187	3.73	2.76	11.8	11.0	0.100	9.744
010	High	50	385	6.50	5.16	13.0	12.1	0.175	13.451
	Medium		287	5.31	4.11	12.2	11.5	0.143	9.565
	Low		221	4.34	3.31	11.7	11.1	0.117	6.725
012	High	50	472	8.27	6.43	12.8	11.8	0.223	23.285
	Medium		402	7.41	5.68	12.4	11.5	0.199	18.771
	Low		323	6.35	4.78	11.8	11.1	0.171	14.557
014	High	50	576	9.10	7.23	13.6	12.4	0.245	15.214
	Medium		442	7.59	5.89	13.0	12.0	0.204	10.850
	Low		370	6.69	5.12	12.6	11.7	0.180	8.668

NOTE: Air Conditions: EDB/EWB 27/29°C Water Conditions: EWT/LWT 7.2/12.8°C ΔT: 5.6°C

Carrier
Turn to the Experts.

42CED ΔT (4-ROWS)

Model 42CED	Speed	ESP Pa	Air Flow (L/s)	Capacity (kW)		Air off FCU (°C)		Water Flow (L/s)	Water Pressure (kPa)
				Total	Sensible	DB	WB		
003	High	50	133	2.23	1.80	12.9	12.1	0.060	8.788
	Medium		103	1.87	1.47	12.2	11.6	0.050	6.546
	Low		69	1.39	1.07	11.2	10.9	0.037	2.511
004	High	50	183	3.22	2.52	12.7	11.83	0.086	18.532
	Medium		135	2.62	1.99	11.8	11.2	0.071	12.704
	Low		88	1.91	1.41	10.8	10.4	0.051	7.293
005	High	50	188	3.53	2.69	12.2	11.4	0.095	22.717
	Medium		143	2.92	2.18	11.4	10.8	0.079	16.440
	Low		96	2.15	1.57	10.5	10.1	0.058	9.296
006	High	50	237	3.61	2.95	13.7	12.6	0.097	7.742
	Medium		198	3.19	2.56	13.3	12.3	0.086	6.187
	Low		153	2.64	2.09	12.7	11.9	0.071	4.484
008	High	50	332	5.63	4.36	13.2	12.0	0.151	20.176
	Medium		281	5.03	3.83	12.7	11.7	0.135	16.649
	Low		187	3.73	2.76	11.8	11.0	0.100	9.744
010	High	50	385	6.5	5.16	13.0	12.1	0.175	13.451
	Medium		287	5.31	4.11	12.2	11.5	0.143	9.565
	Low		221	4.34	3.31	11.7	11.1	0.117	6.725
012	High	50	472	8.27	6.43	12.8	11.8	0.223	23.285
	Medium		402	7.41	5.68	12.4	11.5	0.199	18.771
	Low		323	6.35	4.78	11.8	11.1	0.171	14.557
014	High	50	576	9.10	7.23	13.6	12.4	0.245	15.214
	Medium		442	7.59	5.89	13.0	12.0	0.204	10.850
	Low		370	6.69	5.12	12.6	11.7	0.180	8.668

NOTE: Air Conditions: EDB/EWB 23.9/17.2°C Water Conditions: EWT/LWT 5.5/14.4°C ΔT: 8.9°C

Carrier
Turn to the Experts.

42DC (4-ROWS)

Model 42DC	Speed	ESP Pa	Air Flow (L/s)	Capacity (kW)		Air off FCU (°C)		Water Flow (L/s)	Water Pressure (kPa)
				Total	Sensible	DB	WB		
010	High	50	470	9.3	7.3	14.4	13.3	0.402	23.763
	Medium		401	8.4	6.4	13.9	12.9	0.362	19.877
	Low		277	6.5	4.8	12.8	12.0	0.281	12.375
012	High	50	613	12.3	9.5	14.4	13.2	0.529	41.458
	Medium		500	10.8	8.1	13.7	12.7	0.464	32.999
	Low		352	8.5	6.2	12.6	11.9	0.366	21.880
014	High	50	671	13.7	10.5	14.2	13.1	0.589	29.771
	Medium		531	11.8	8.8	13.5	12.5	0.506	22.777
	Low		392	9.5	6.9	12.5	11.8	0.409	15.394
016	High	50	894	17.6	13.6	14.6	13.3	0.758	50.485
	Medium		767	16.0	12.2	14.0	13.0	0.688	42.355
	Low		560	13.0	9.6	13.1	12.2	0.558	28.785
018	High	50	901	17.9	13.9	14.4	13.3	0.772	25.168
	Medium		772	16.2	12.4	13.9	12.9	0.698	20.983
	Low		563	13.1	9.7	12.9	12.1	0.564	14.407
020	High	50	947	19.4	14.9	14.2	13.1	0.836	30.847
	Medium		790	17.3	13.0	13.6	12.6	0.743	24.779
	Low		575	13.9	10.1	12.6	11.8	0.598	17.038

NOTE: Air Conditions: EDB/EWB 27/29°C Water Conditions: EWT/LWT 7.2/12.8°C ΔT: 5.6°C

42DCD ΔT (4-ROWS)

Model 42DCD	Speed	ESP Pa	Air Flow (L/s)	Capacity (kW)		Air off FCU (°C)		Water Flow (L/s)	Water Pressure (kPa)
				Total	Sensible	DB	WB		
010	High	50	470	7.5	6.1	13.4	12.4	0.203	46.958
	Medium		422	6.8	5.4	13.0	12.0	0.182	39.247
	Low		277	5.3	4.0	12.0	11.3	0.141	24.660
012	High	50	613	8.6	7.3	14.1	13.0	0.232	16.021
	Medium		500	7.6	6.3	13.6	12.7	0.203	12.524
	Low		352	6.0	4.8	12.7	12.0	0.160	8.280
014	High	50	671	10.2	8.4	13.6	12.6	0.275	23.375
	Medium		531	8.8	7.1	13.0	12.2	0.236	17.755
	Low		391	7.1	5.6	12.3	11.6	0.191	12.136
016	High	50	894	13.5	11.0	13.8	12.7	0.363	41.160
	Medium		767	12.3	9.9	13.4	12.4	0.330	34.584
	Low		559	9.9	7.7	12.6	11.8	0.268	23.943
018	High	50	901	14.5	11.6	13.4	12.3	0.389	49.738
	Medium		772	13.1	10.3	13.0	12.0	0.352	41.817
	Low		563	10.6	8.1	12.2	11.4	0.284	28.695
020	High	50	947	15.2	12.2	13.4	12.3	0.408	34.703
	Medium		790	13.5	10.6	12.9	12.0	0.362	28.187
	Low		575	10.8	8.3	12.1	11.4	0.291	18.951

NOTE: Air Conditions: EDB/EWB 23.9/17.2°C Water Conditions: EWT/LWT 5.5/14.4°C ΔT: 8.9°C

42CET/CED Wiring Diagram

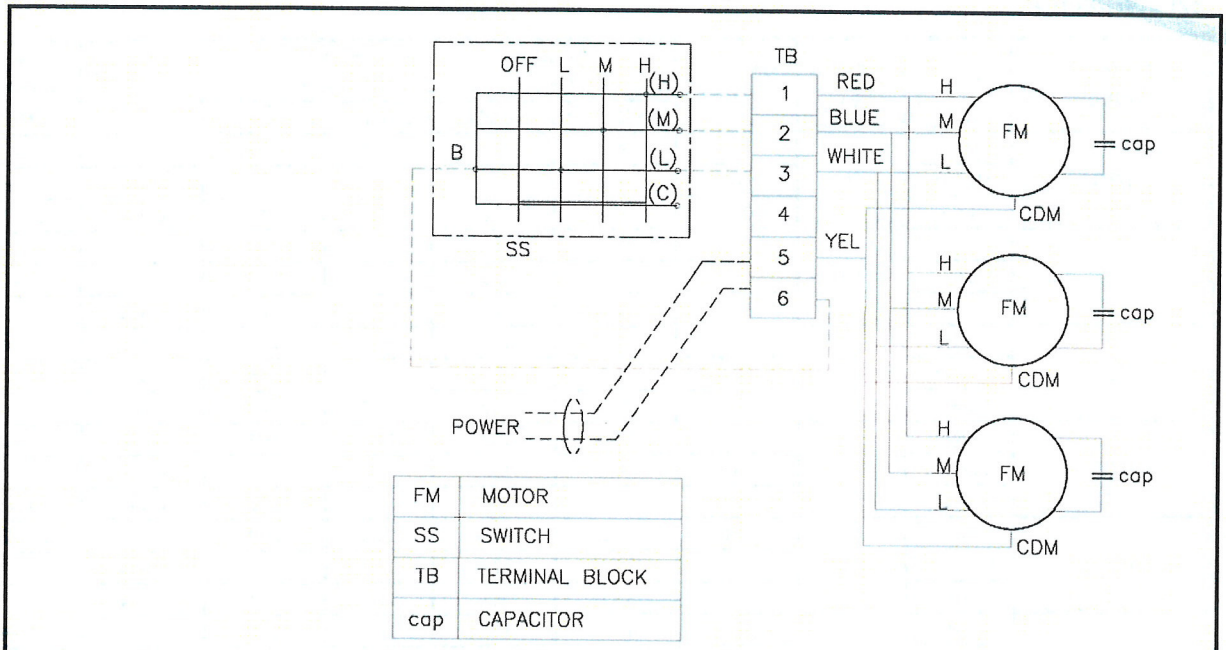

FM	MOTOR
SS	SWITCH
TB	TERMINAL BLOCK
cap	CAPACITOR

NOTE: 1. 002,003,004,005,006 are single motor; 008,010,012 are double motors; 014 is three motors
2. Snap apart carefully at hingle to seperate cover from the control box

42DC/DCD Wiring Diagram

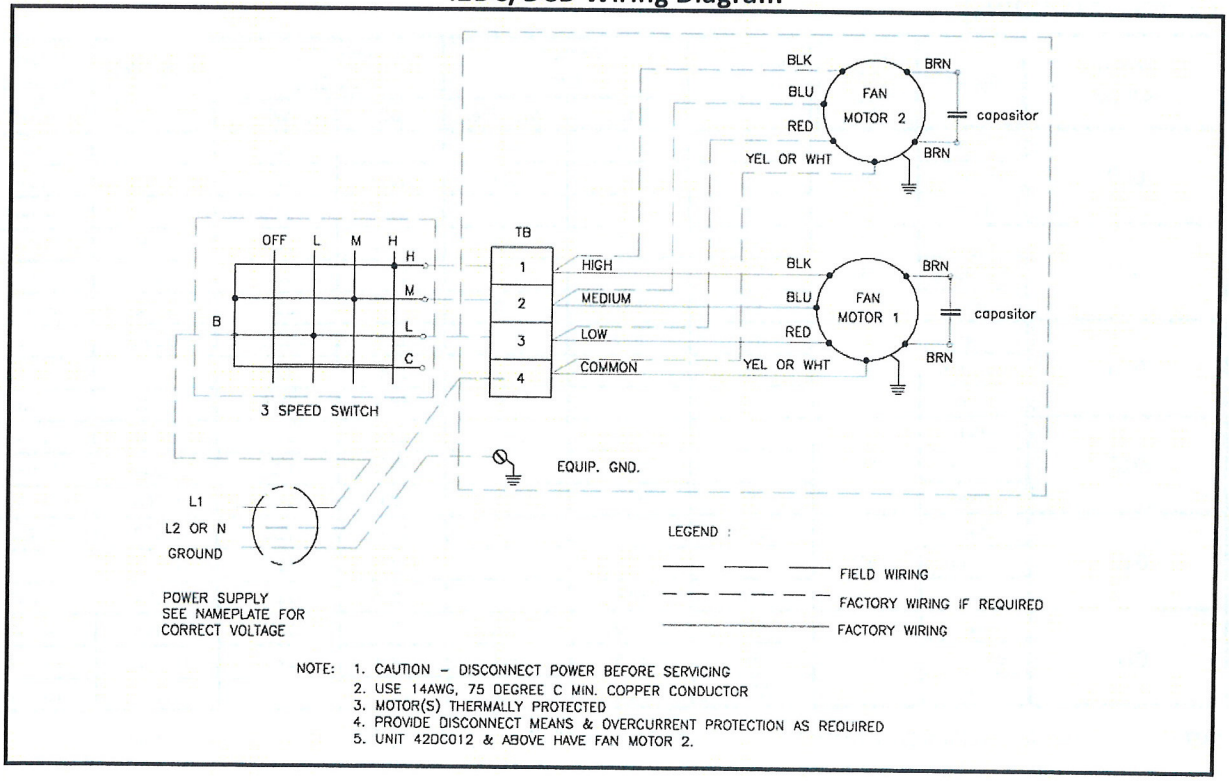

NOTE: 1. CAUTION – DISCONNECT POWER BEFORE SERVICING
2. USE 14AWG, 75 DEGREE C MIN. COPPER CONDUCTOR
3. MOTOR(S) THERMALLY PROTECTED
4. PROVIDE DISCONNECT MEANS & OVERCURRENT PROTECTION AS REQUIRED
5. UNIT 42DC012 & ABOVE HAVE FAN MOTOR 2.

Carrier
Turn to the Experts.

HVAC Guide Specifications
Size range: 300 to 1400 Nominal Cfm

Part 1 – GENERAL

1.1 **System Description**

Horizontal, room fan coil unit with furred-in, above ceiling for ducting, or with cabinet for exposed ceiling installations.

1.2 **Quality Assurance**

Unit shall be tested and certified in accordance with ARI Standard 440 and base unit UL certified. Each coil shall be factory tested for leakage at 300 psig air pressure with coil submerge in water, insulation and adhesive shall meet NEPA-90A requirements for flame spread and smoke generation. All equipment wiring shall comply with NEC requirements.

1.3 **Delivery storage and handling**

Each unit shall be individually packaged from point of manufacture. Unit shall be handled and stored in accordance with the manufacturer's instructions.

Part 2 - PRODUCTS

Equipment

2.1 **General**

Factory assembled, horizontal, blow-thru type fan coil for furred-in, exposed ceiling or ducted installations. Unit shall be complete with water coil(s), fan(s), motor(s), drain pan and all required wiring, piping, controls and special features.

2.2 **42CET, CED Furred-in Units**

Base 42CET, CED unit with factory installed plenum section and cleanable filter as shown on equipment drawings. The plenum shall be bottom or rear air return. Shall enclose the fan/motor assemblies, and shall be lined with ½-in PU insulation. Unit shall have a removable panel to provide access to fan/motor assemblies and unit identification label.

2.3 **Fans**

Direct driven, double width fan wheels with forward curved blades shall be statically and dynamically balanced. Scrolls shall be constructed of galvanized steel. Fan wheels shall be constructed of galvanized steel.

2.4 Coils

Standard base unit shall be equipped with a 3-row or 4-row coil for installation in a 2-pipe system. Coils shall have 3/8-in copper tubes, aluminium fins bonded to the tubes by mechanical expansion, and a working pressure of 250 psig. Each coil shall have a manual air vent and sweat connections for 5/8-in. OD copper tubes.

2.5 Controls and Safeties

Unit shall be furnished with a 3-speed, 4 position fan switch on a wall plate for field mounting. The fan motor(s) shall be equipped with integral automatic temperature reset for motor protection.

2.6 Operating Characteristics

A one coil unit installed in a 2-pipe system shall be capable of providing heating or cooling as determined by the operating mode of the central water supply system.

2.7 Electrical Requirements

Standard unit shall operate on 220-240v, single phase, 50Hz electric power. All internal wiring shall be in flexible conduit.

2.8 Motor(s)

Fan motors shall be 3-speed, 220-240v, single phase, 50Hz, permanent split capacitor type, 50Hz, permanent split capacitor type, with sleeve type bearings and oversized oil reservoirs to ensure lubrication.



Turn to the Experts

Carrier International Sdn Bhd, Malaysia

Manufacturer reserves the right to discontinue, or change at anytime, specifications or designs without notice and without incurring obligations.

42CET-F08-1PD