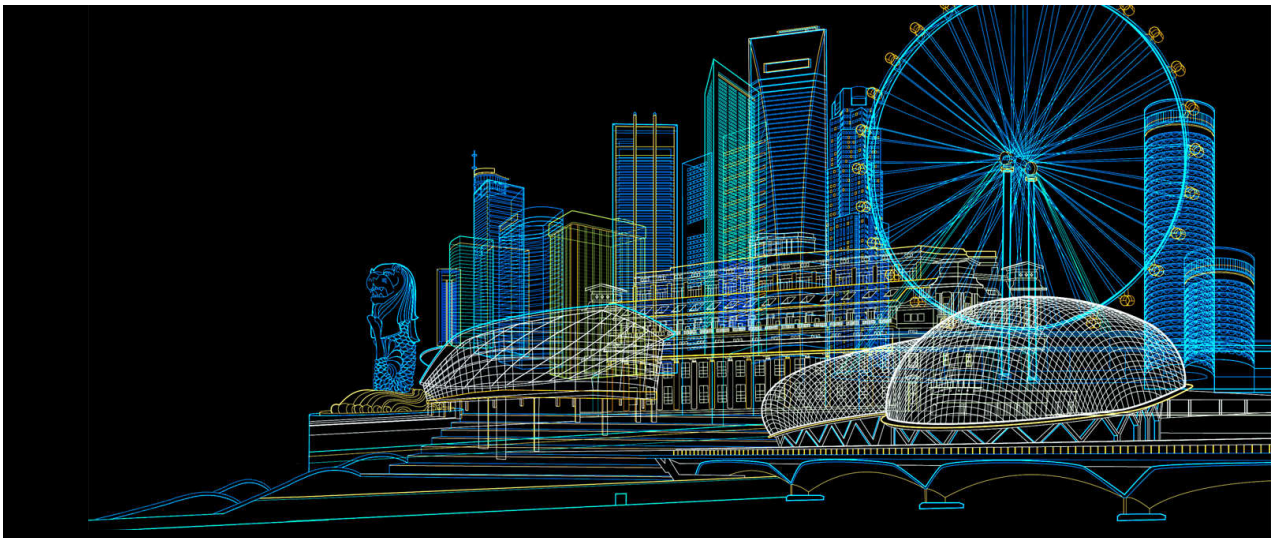

Edwin Kong, Motors & Drives Automation Products Division

Active Voltage Conditioner (AVC) for today's essential facility

Voltage sags and surges are the most common form of poor power quality, costing high-end industries billions of dollars. This session shares with you the latest technology of AVC with a live demo in mitigating the problems.

Power and productivity for a better world™

AVC_2 Product Presentation

1. AVC_2 Overview
2. PQ Event Theory
3. Performance
4. AVC System
5. Project References & Case Studies

8. End

AVC_2 Specifications

- Full correction, three-phase sags down to 70% retained voltage
- Full correction, single-phase sags down to 55% retained voltage
- Partial correction, three-phase sags down to 30% retained voltage
- Partial correction single-phase sags down to 0% retained voltage
- Continuous “ONLINE” regulation
- Over and under voltage regulation
- Correction for voltage vector phase angle errors created by faults in the supply
- Voltage unbalance correction



AVC_2 Features

- Fast (sub-cyclic) response
- Simple user controls
- Rugged overload capability
- Short circuit protected
- Extensive diagnostics
- Fault log
- Voltage event data logging
- Ethernet connectivity
- Modular construction



Modular Construction

- Minimum spares required
- High commonality of parts
- Fast replacement





Single Line Diagram

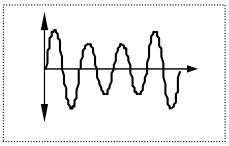

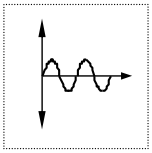

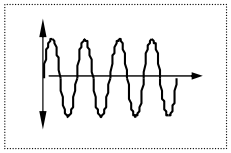

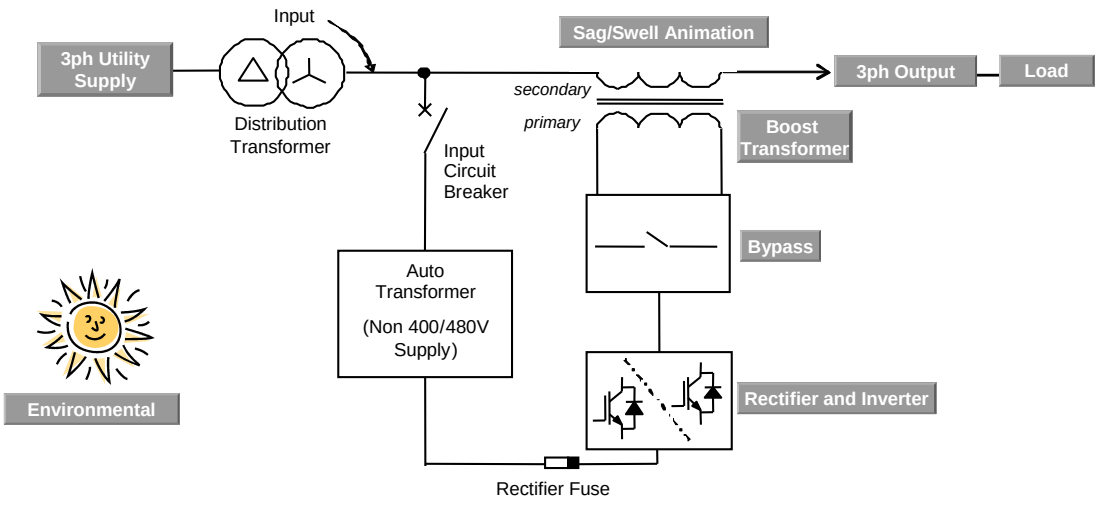

Click on grey boxes for more information

Typical Factory Configuration

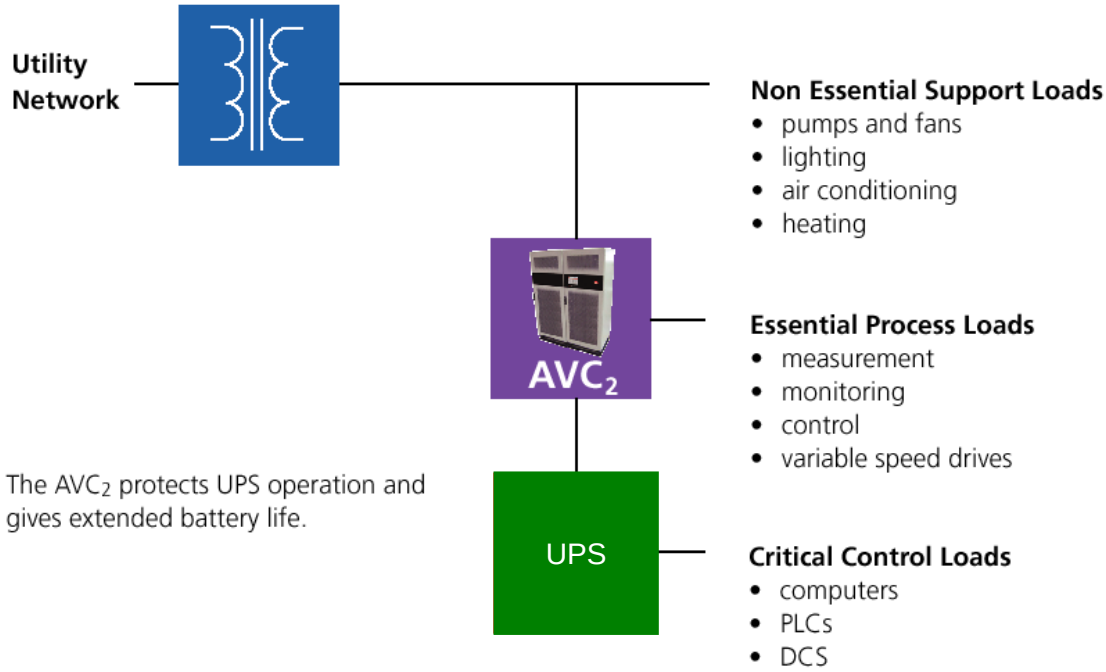

The AVC_2 protects UPS operation and gives extended battery life.

Graphic Display Module

- **The optional Graphic display offers:**
  - Easy access to information
  - Visual representation of the system
  - Event log, date and time stamped
  - Fault log, date and time stamped
  - Factory tags and location data
  - Web Browsing
  - Serial Communications

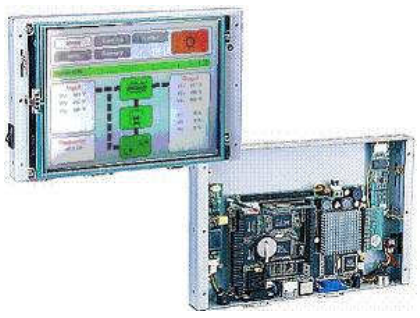

Graphic Display Module

AVC Online

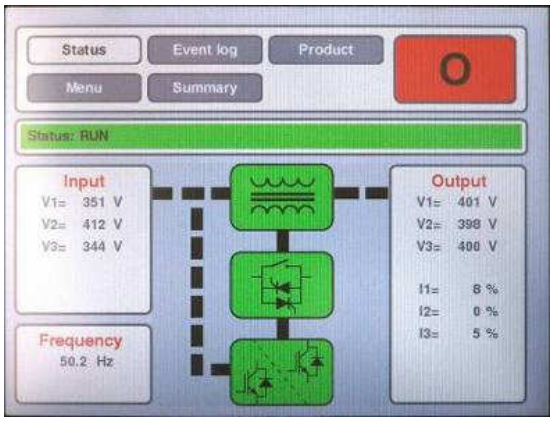

AVC in Bypass

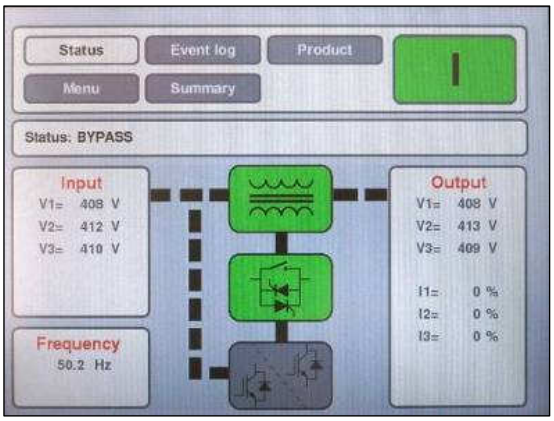

© ABB Group

Graphic Display Module

Event Log

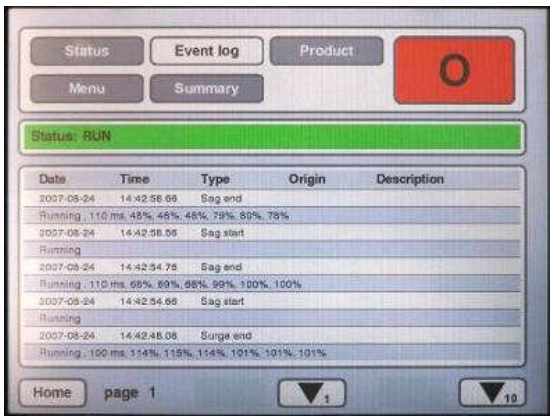

Event Summary

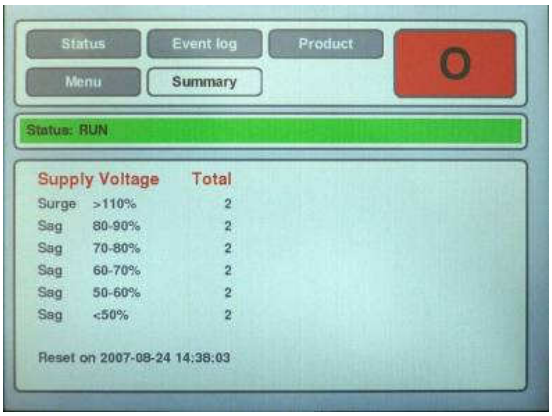

© ABB Group

Plant Wide AVC_2 System Browsing

- Ability to call up individual AVC's
- Monitor in real time
- View event logs with date and time stamp
- Download event logs
- View data summary of multiple systems at once

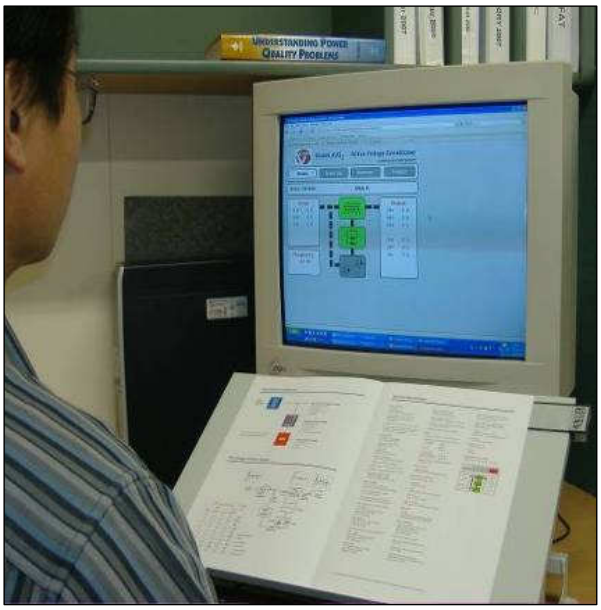

Full Web and Plant System

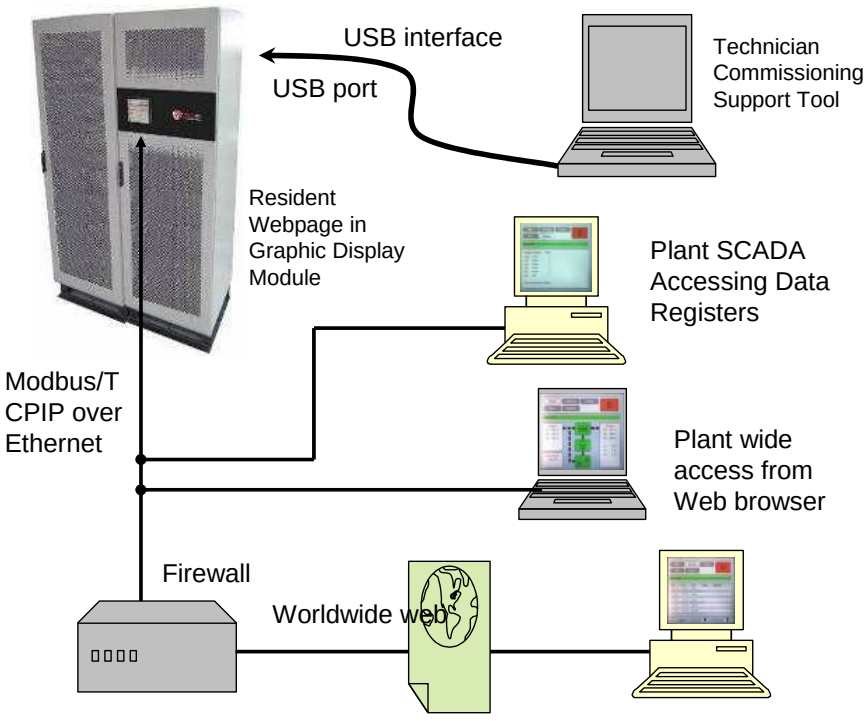

Rating Table

- Options Available
- 600V
- Medium Voltage
- 40% correction

30% AVC_2 kVA Ratings				Frame size	
50Hz			60Hz		
380V	400V	415V	208/480V		
160	165	175	200	0.5B	Product Overview
240	250	260	300	0.75B	Product Overview
315	300	345	400	1B	Product Overview
475	500	520	600	1.5B	Product Overview
630	650	690	800	2B	Product Overview
790	850	865	1000	2.5B	Product Overview
950	1000	1035	1200	3B	Product Overview
1188	1250	1297	1500	4B	Product Overview
1585	1650	1729	2000	5B	Product Overview
1900	2000	2075	2400	6B	Product Overview

Layout

Layout

Click on grey boxes
for more information

© ABB Group

Home

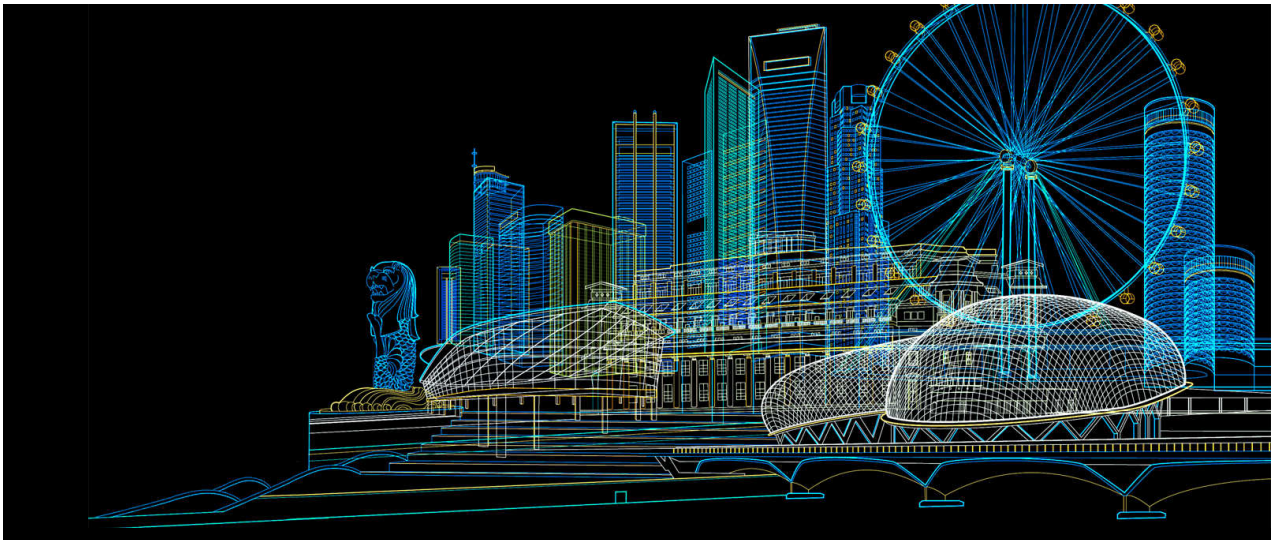

Edwin Kong, Motors & Drives Automation Products Division

POWER Quality Event Theory

© ABB Group

Power and productivity
for a better world™

Power Quality (PQ)

- The power supply has become reliable!
- Long interruptions and blackouts are rare.
- Hence increased focus on 2nd order problems.
  - Power factor, harmonics, sags, surges, distortion, RFI
- Factory equipment has become less tolerant.
  - CNC automatic machinery, PLC's, robotics, processor controlled tools

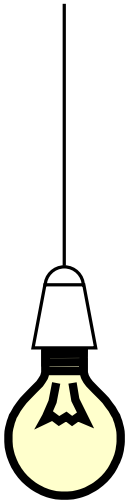

© ABB Group

Transmission Faults

Single Phase - Ground ≈ 68% of Faults

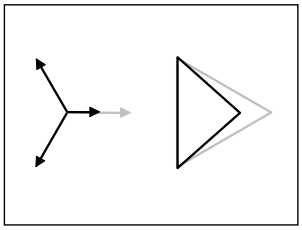



2 Phase - Ground Fault ≈ 19%

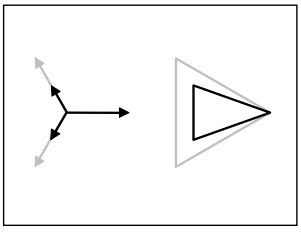

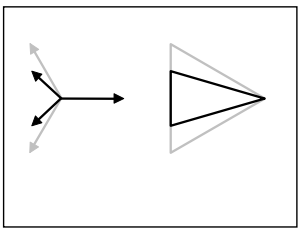

Balanced 3 Phase ≈13%

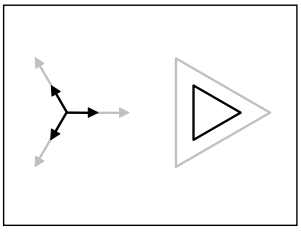



© ABB Group

Sag Warnings

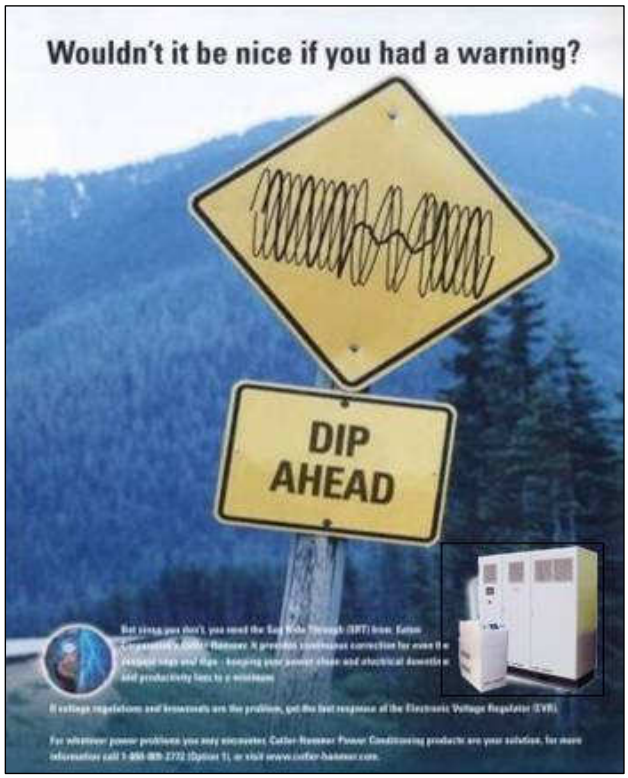

- The most common PQ problem facing industry is Sag events.
- According to EPRI, sags account for >92% of PQ events.
- Facilities do not get advance warnings of impending sags.
- **There is a solution !!!**

Equipment Immunity Standards

1. Semi-F47 0706
2. IEC6100-4-34 Voltage Dips (sags)
3. ITIC

Certification Team SEMI F47!





IEC, UL, VDE

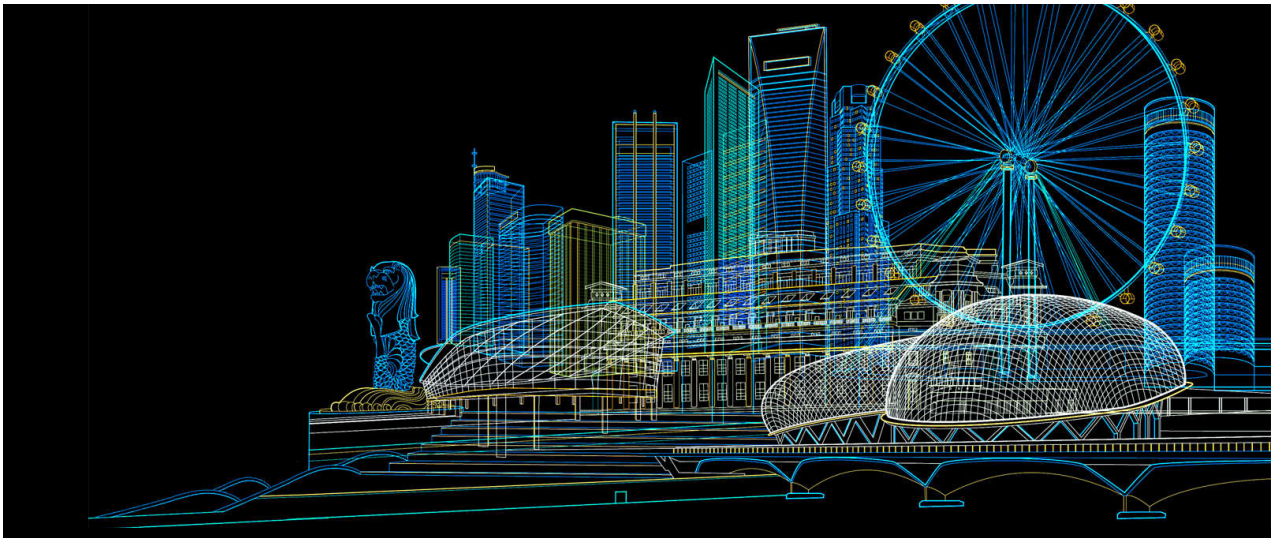

Edwin Kong, Motors & Drives Automation Products Division

AVC_2 Performance

Power and productivity
for a better world™

50% Retained Voltage Single Phase Sag

Transmission Line Sag | AVC Input | AVC Output

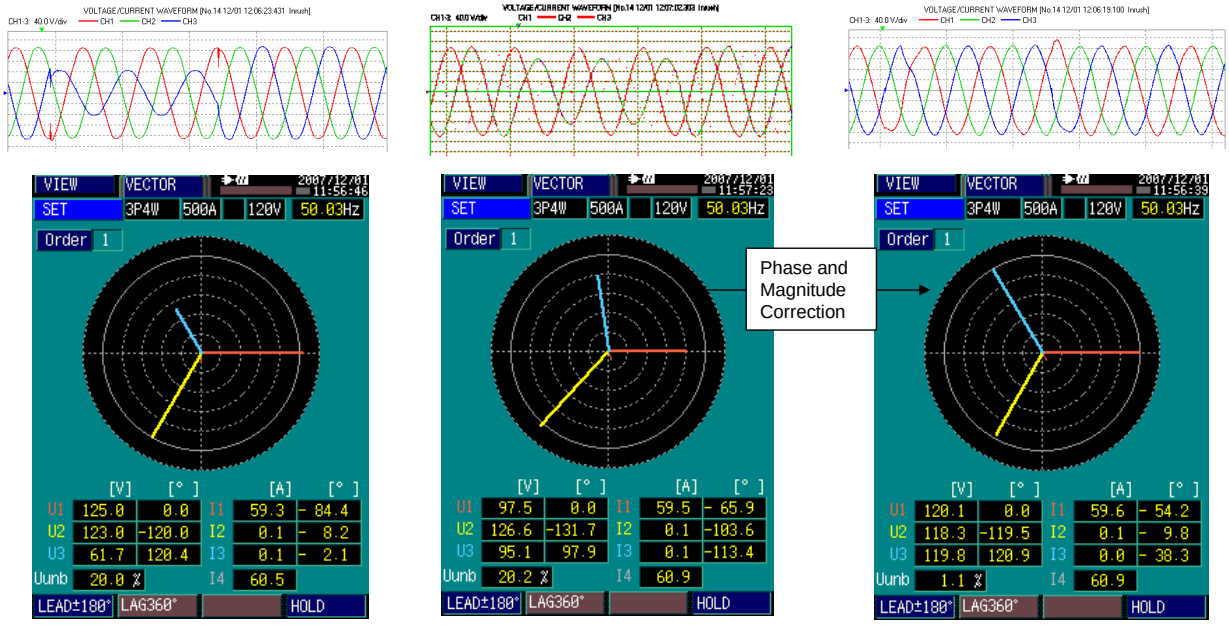

Performance Graphs

70% Balanced 3 Phase Sag Performance

Transmission Line Sag | AVC Input | AVC Output

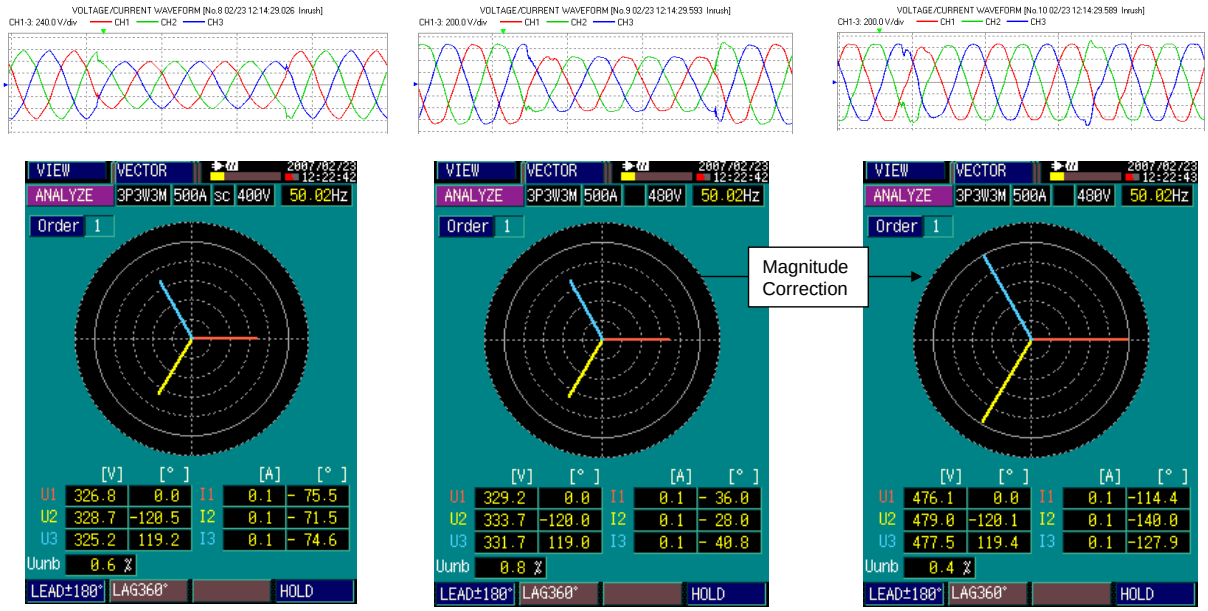

Performance Graphs

AVC 4 Quadrant Control

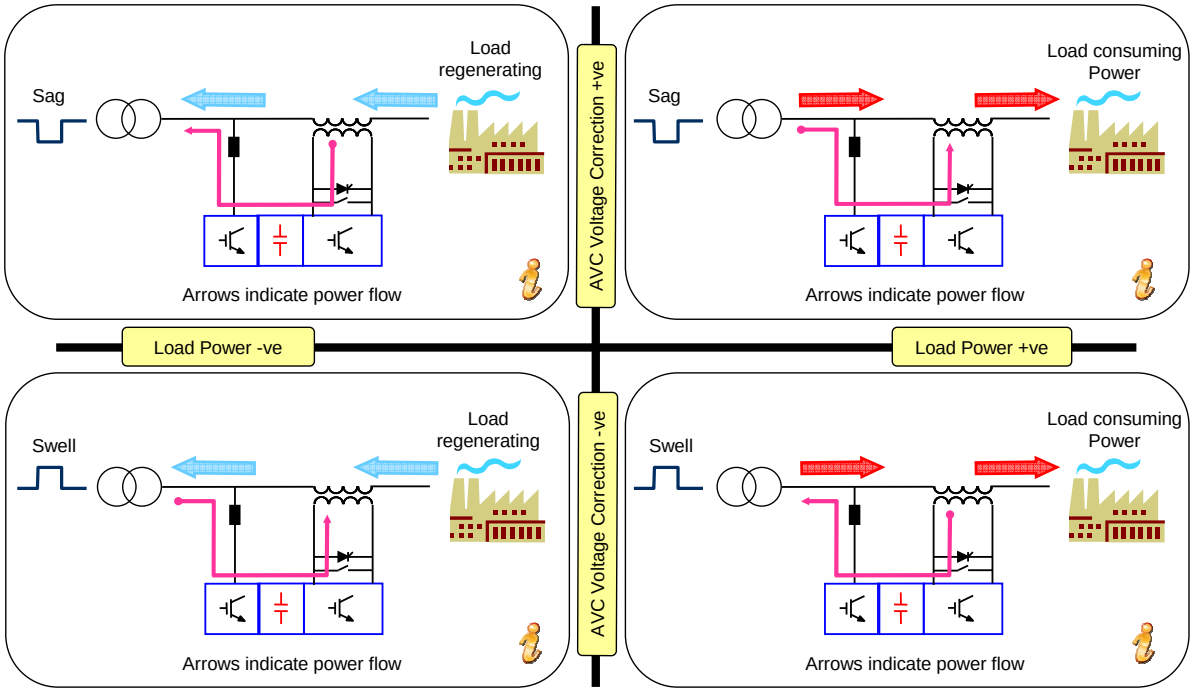

Home

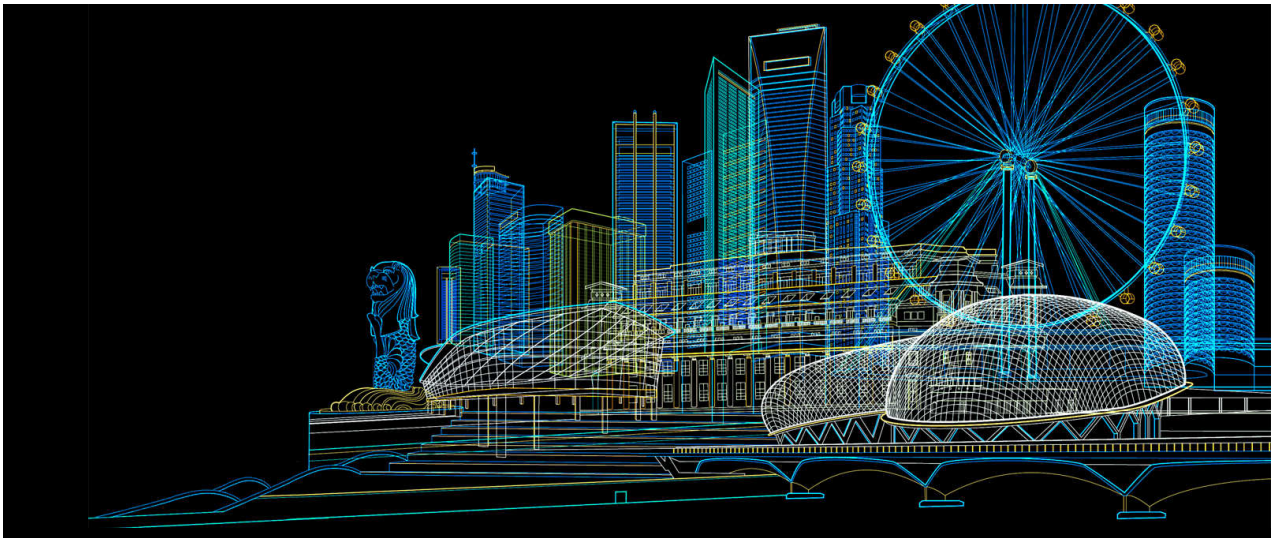

Edwin Kong, Motors & Drives Automation Products Division

AVC_2 System

Power and productivity for a better world™

AVC_2 system

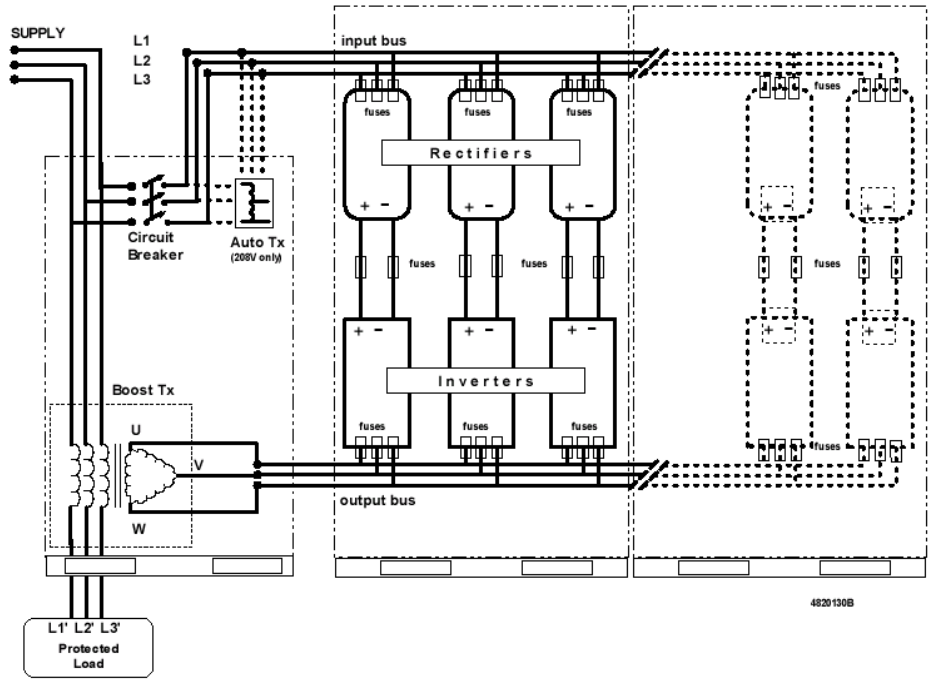

Specifications: Load Capacity

- 200 to 2400kVA To 10MVA custom design
- Displacement power factor of connected load
  0 lagging to 0.9 leading
- Crest factor 3 at 100% current
- Overload capacity from 100% supply
  150% for at least 30 second, once per 500s

Single Line

Specifications: Input Supply

- Nominal output voltage (V)
  According to model
- 480V 60Hz, 380 to 415V 50Hz
- 208V 60Hz,
- Options
  208V, 50Hz
  480V 50Hz
  600V
  Medium Voltage
- Power System
  3 Phase, center ground referenced
  Supply overvoltage category 3
  Fault capacity >40kA (model specific)
- Outage ride through 500ms
- Maximum supply voltage

  110% of nominal supply voltage

Single Line

© ABB Group

Specifications: Output Supply

- Nominal output voltage (V)
  Set to match nominal input supply voltage
- 3ph regulation range
  +/-10% continuous
- 3ph regulation accuracy
  +/-1% typical to +/-2% maximum
- 30% Model 3 Phase balance sag/swell Correction ability
- from 70% remaining voltage
  +30% for at least 30s
- -10% continuous
- 1ph to ground correction ability
  From 55% remaining voltage
- +45% for at least 30s
- -15% continuous
- Sag correction accuracy (within specified range) +/- 10% of correction ratio
- Sag correction response
  Initial <250 micro seconds
  Complete < 0.5 cycle
- Equivalent series impedance (operating)
  < 4%
- Efficiency >98% (typically 99%)

Single Line

© ABB Group

Specifications: Bypass

- Capacity
  100% of kVA rating
- Maximum overload capacity in bypass

10 minutes	125%
1 minute	150%
1s	500%
200ms	2000%

- Transfer time
  Inverter to Bypass < 0.5ms
  Bypass to inverter < 250ms
- Equivalent series impedance in bypass
  < 2.5% typical

Single Line

© ABB Group

Specifications: Environmental

- Enclosure
  - IP20 standard
  - IP21 by optional roof kit
- Pollution degree rating 2
- Minimum Operating temperature
  - 0ºC, 32ºF
- Minimum Operating temperature
  - 40ºC
- Maximum Operating temperature
  - 40ºC
  - Above 40ºC de-rate at 2% per ºC to a maximum of 50ºC
  - Fahrenheit 104ºF
  - Above 104ºF derate at 2% per 1.5ºF to a maximum of 122ºF
- Capacity derating with elevation
  - 1.2% every 100m above
  - 1000m to 3000m Maximum
- Humidity <95% non condensing
- Noise <75dba

Single Line

© ABB Group

Layout 0.5 to 2B

0.5 to 1B System

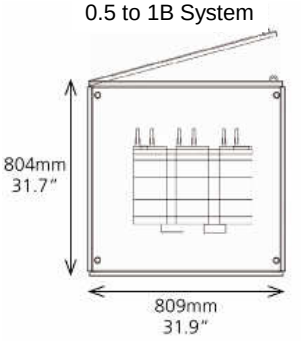

1.5 to 2B System side by side

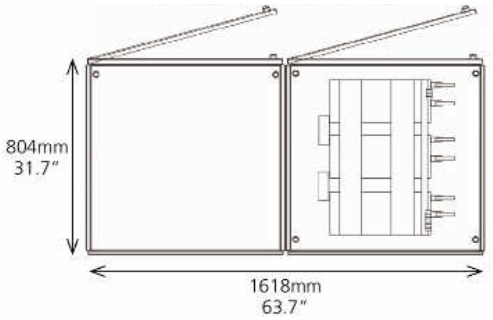

1.5 to 2B System back to back

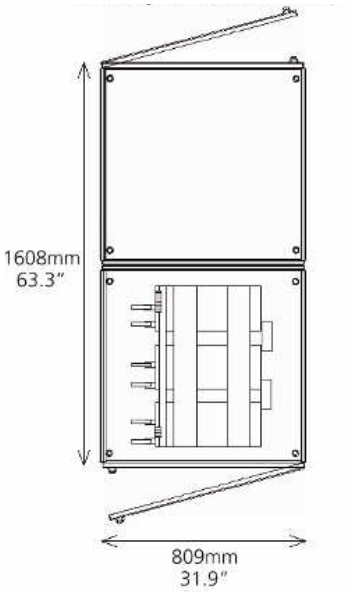

Rating Table

© ABB Group

Layout 2.5B to 6B

3B system

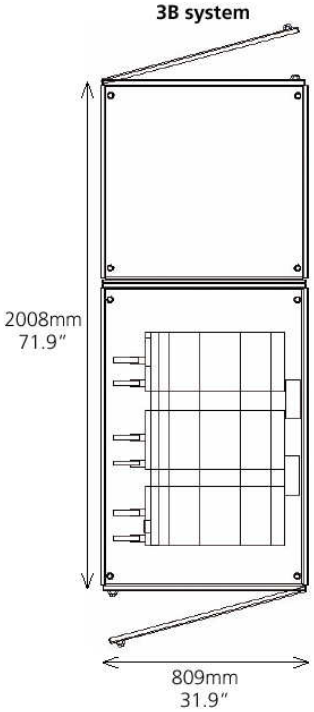

4B - 6B system

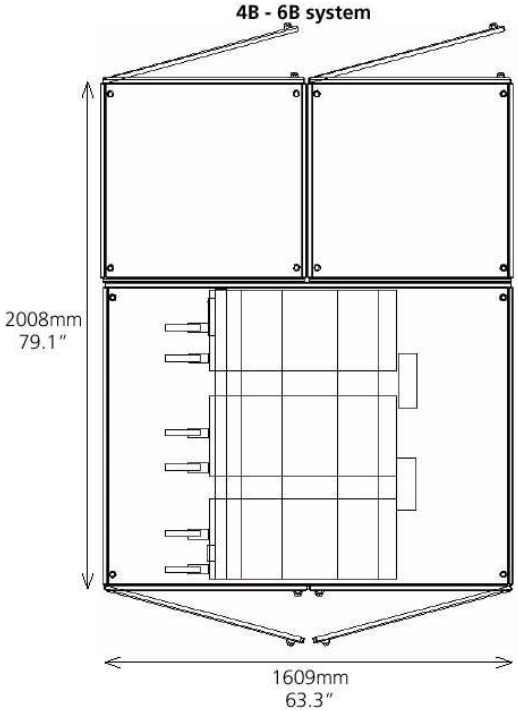

Rating Table

© ABB Group

Rectifier

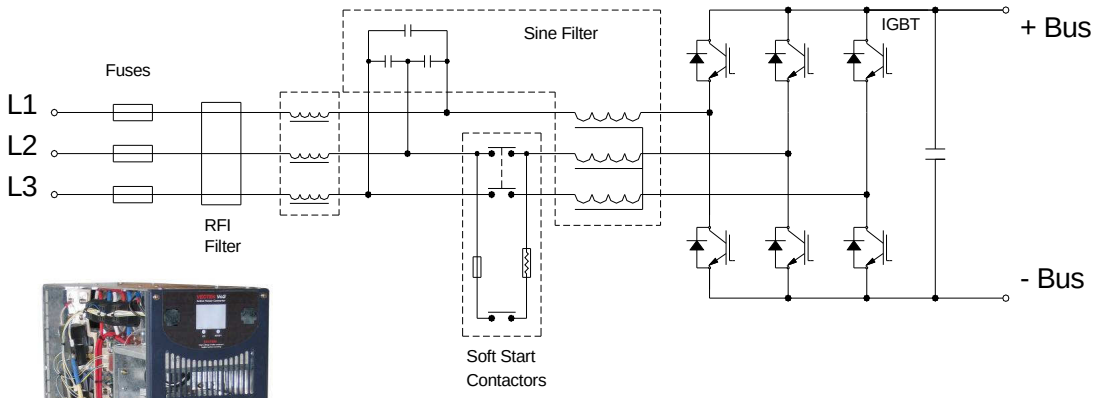



- IGBT active rectifier
- Bi-directional power flow
- Sinusoidal input current
- DC output

Single Line Inverter

© ABB Group

Inverter

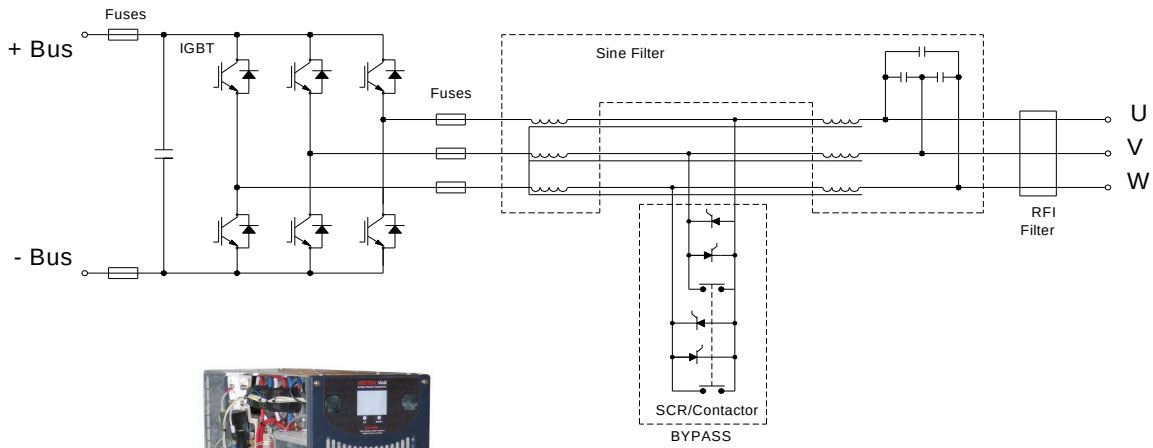



- IGBT inverter
- Bi-directional power flow
- Sinusoidal output current
- DC input

Single Line

© ABB Group

Injection Transformer

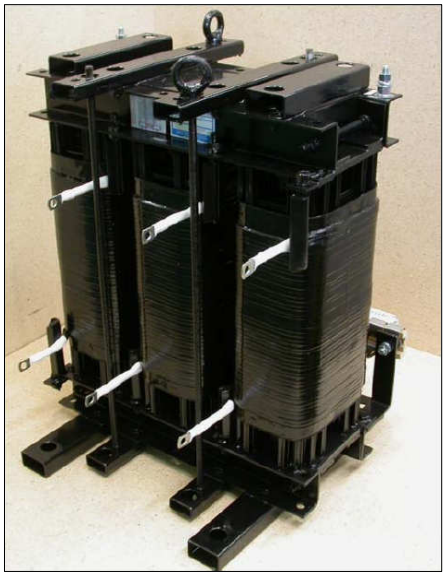

400kVA 480 volt model

Single Line

No Protection Against PQ Events

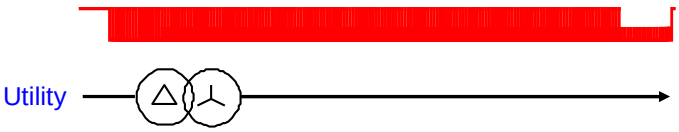

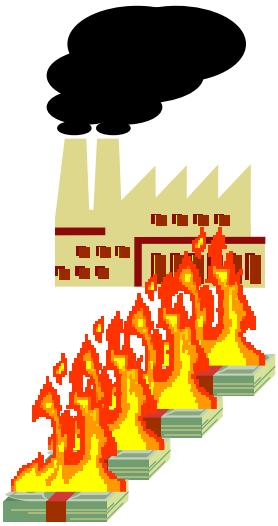

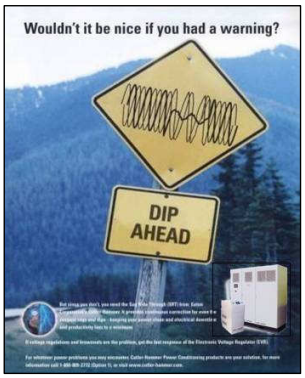

Single Line

AVC_2 Sag Protection

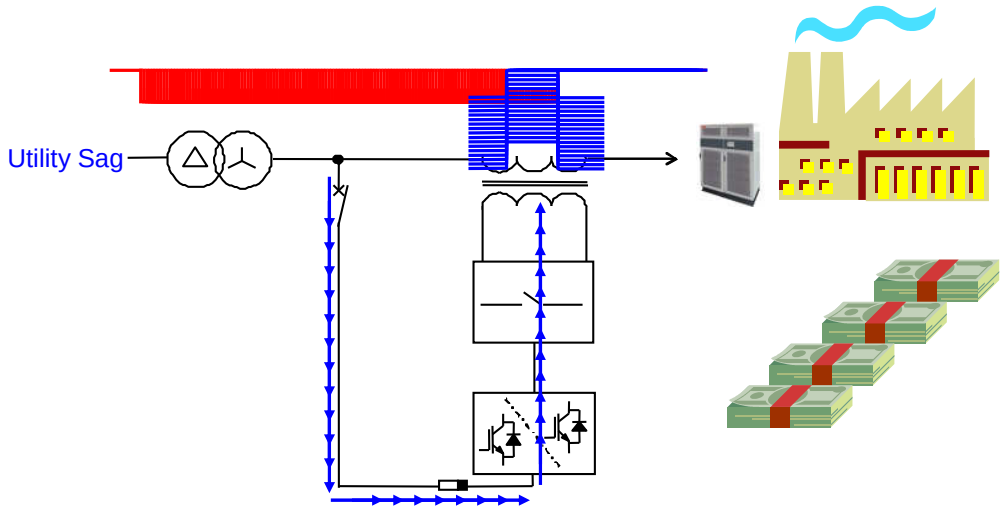

Single Line

© ABB Group

AVC_2 Swell Protection

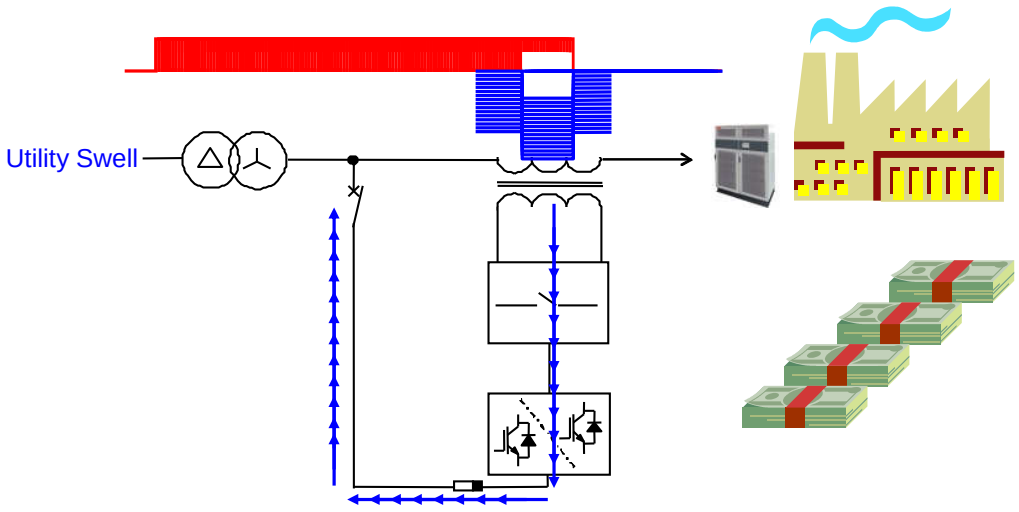

Single Line

© ABB Group

30% AVC-2 Single Phase Event Performance Graph

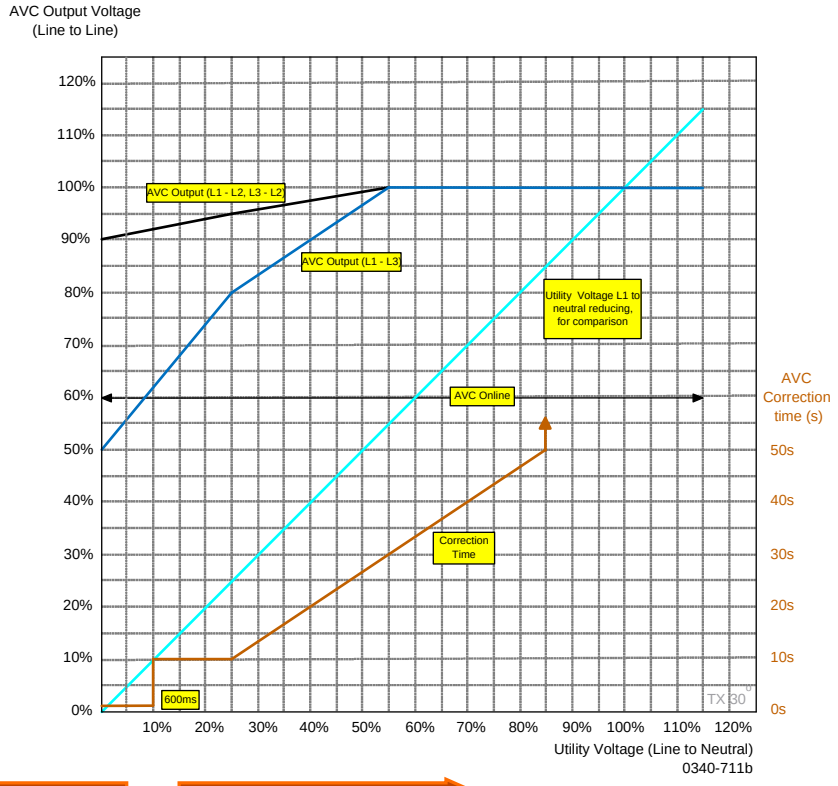

50% Retained Voltage

Line to Line Neutral Graph

© ABB Group

30% AVC-2 Single Phase Event Performance Graph

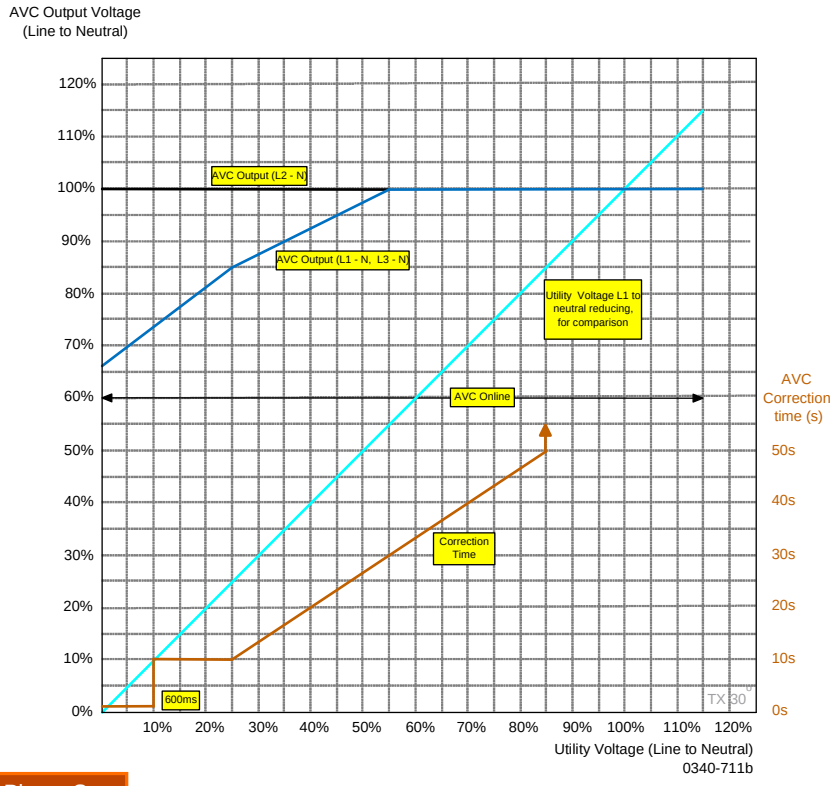

50% Single Phase Sag

© ABB Group

30% AVC-2 3 Phase Balanced Event Performance Graph

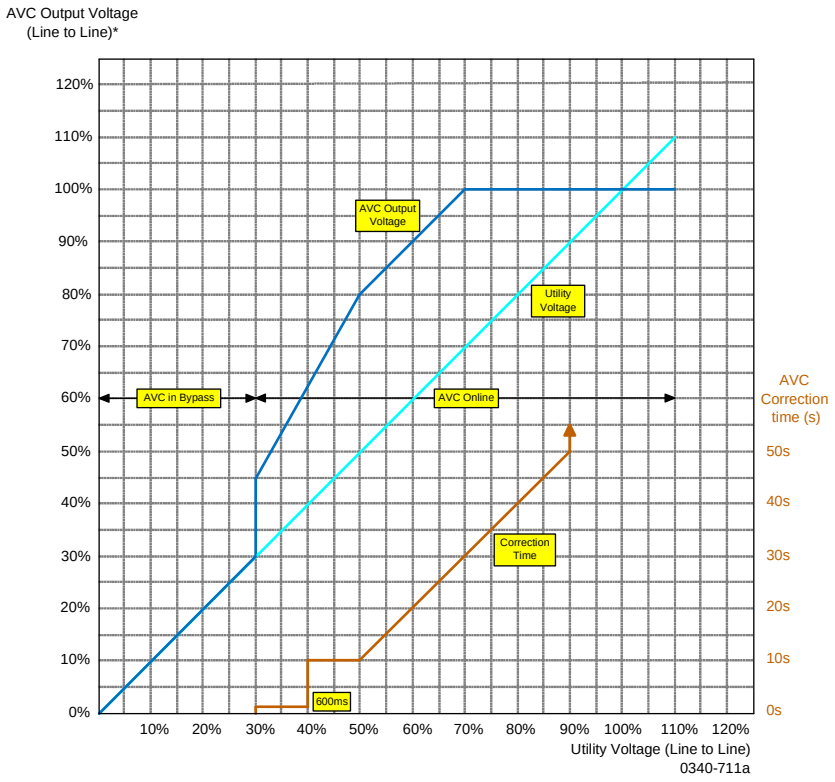

70% Balanced Sag

*AVC output at 0.8 PF for 208 volt systems

AVC Solution

- Eliminates Voltage Sags from Crane
- Corrects sags when crane lifting (motoring)
- Corrects sags when crane is lowering (regenerating)

Power and productivity
for a better world™

