Carrier

Turn to the Experts.℠

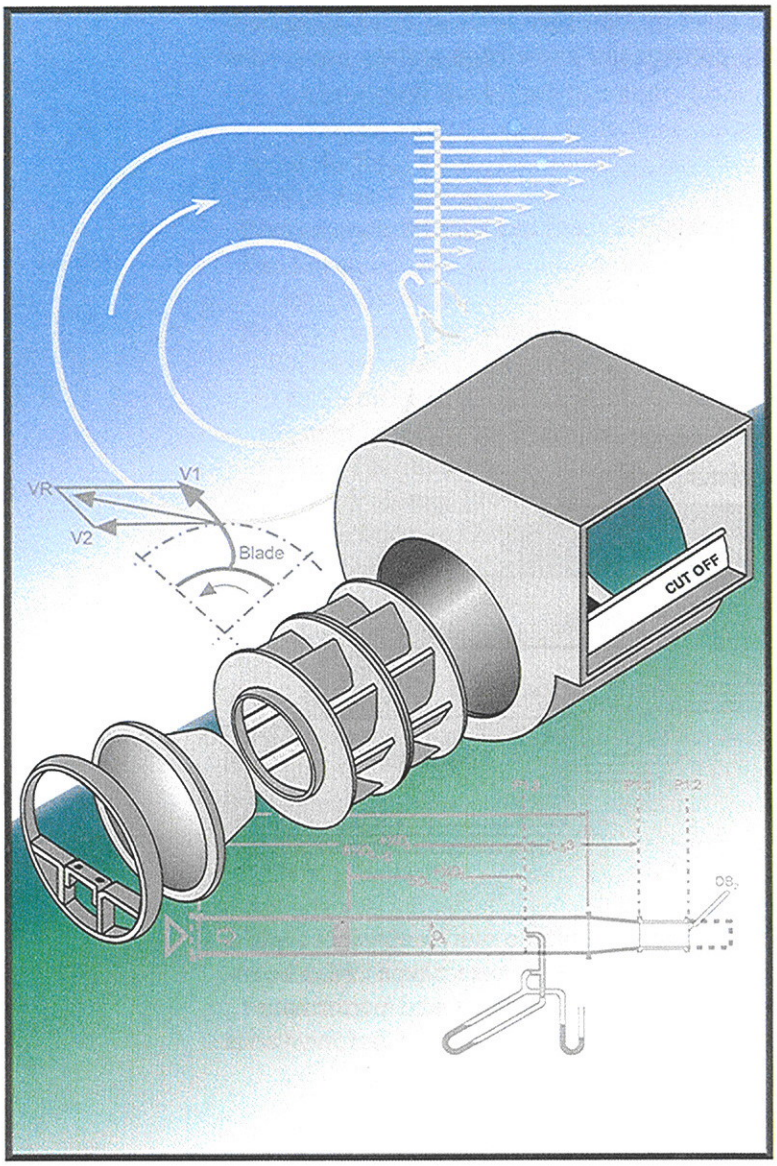

COMMERCIAL HVAC AIR-HANDLING EQUIPMENT

Fans: Features and Analysis

Technical Development Program

Technical Development Programs (TDP) are modules of technical training on HVAC theory, system design, equipment selection and application topics. They are targeted at engineers and designers who wish to develop their knowledge in this field to effectively design, specify, sell or apply HVAC equipment in commercial applications.

Although TDP topics have been developed as stand-alone modules, there are logical groupings of topics. The modules within each group begin at an introductory level and progress to advanced levels. The breadth of this offering allows for customization into a complete HVAC curriculum – from a complete HVAC design course at an introductory-level or to an advanced-level design course. Advanced-level modules assume prerequisite knowledge and do not review basic concepts.

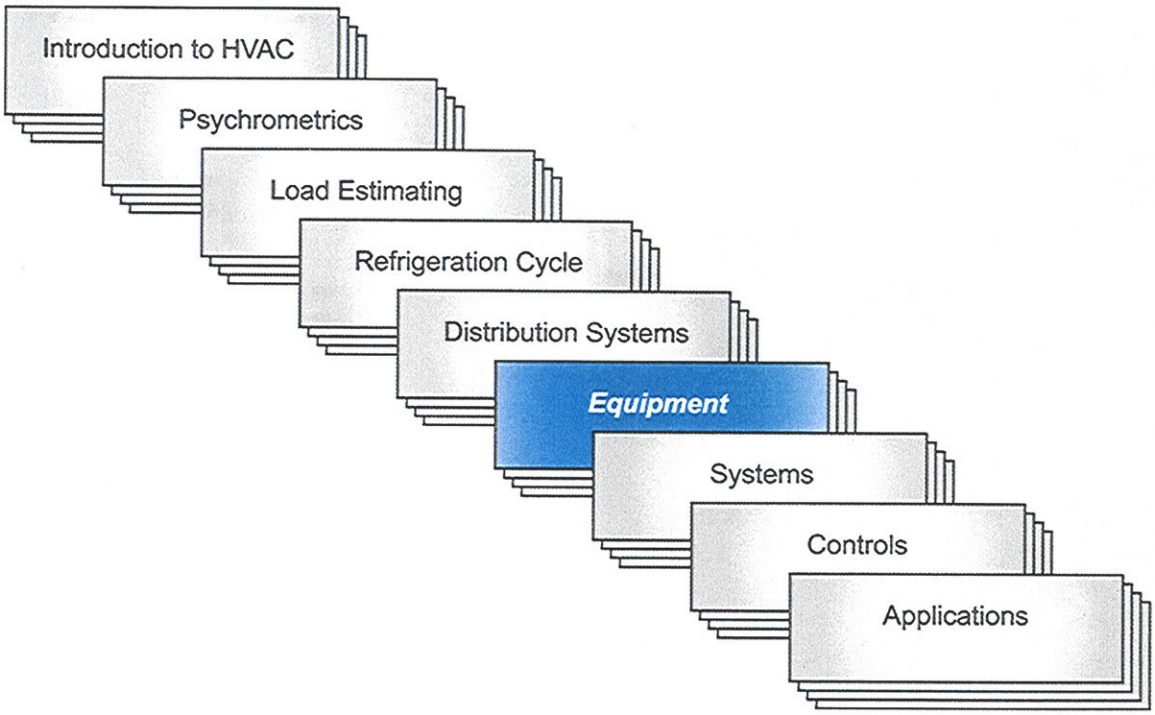

The heart of any air-handling system is the fan. Fans may consume more energy in a typical HVAC system than the compressors! It is extremely important that the correct type of fan be chosen for the application. This TDP module will describe fan characteristics and performance in order to provide designers with the knowledge to select and apply the proper fan for various HVAC situations.

© 2005 Carrier Corporation. All rights reserved.

The information in this manual is offered as a general guide for the use of industry and consulting engineers in designing systems. Judgment is required for application of this information to specific installations and design applications. Carrier is not responsible for any uses made of this information and assumes no responsibility for the performance or desirability of any resulting system design.

The information in this publication is subject to change without notice. No part of this publication may be reproduced or transmitted in any form or by any means, electronic or mechanical, for any purpose, without the express written permission of Carrier Corporation.

Printed in Syracuse, NY

CARRIER CORPORATION
Carrier Parkway
Syracuse, NY 13221, U.S.A.

Table of Contents

Introduction 1
Fan Types 2
  Centrifugal Fans 2
  Axial Fans (In-line) 3
Centrifugal Fans 3
  Impeller Design 4
    Forward-Curved 5
    Airfoil and Backward-Inclined 6
    Plenum Fan 8
Axial (In-line) Fans 9
AMCA Fan Classes 12
Performance Ratings and Static Efficiency 13
Fan Laws 14
  Density Effects 15
System Curve, Fan Stability, System Effect 17
  System Curve 17
  Fan Stability 20
  System Effect, with Example 21
    Fan Test Station 21
    Fan Velocity Profile 22
    Transition to Outlet Ducts 22
    Losses-Outlet Ducts 22
    Discharge Elbows 24
    System Effect-Discharge Elbow 24
    Elbow Loss 25
    System Effect Conclusion 25
Miscellaneous Fan Topics 26
  Bearings 26
  Motors 27
  Drives 29
  Spring Isolation 30
Summary 30
Work Session 31
Appendix 35
  Fan Law Equations 35
  Centrifugal Fans: Impeller Comparisons 36
  Axial Fans: Impeller Comparisons 37
  Work Session Answers 38

Introduction

In the HVAC industry, the fan is one of the most important components in the heating and cooling system. It is also one of the easiest components to misapply because of all the types and arrangements available. Fans are important because they can consume more energy than the air conditioning compressors in a building.

The fan itself consists of a rotating impeller and a fan scroll housing to collect and direct the airflow in the direction desired. A fan operates on the same basic principle as a centrifugal pump, converting rotational mechanical energy into fluid or air energy. The energy created by the fan is determined by the total pressure increase (velocity pressure + static pressure) of the air passing through the fan.

The fan industry is based on technology that is, for the most part, not new. The basic fluid mechanics governing fan aerodynamic design and performance have been well known for decades. Standards for the construction, testing, and performance rating of fans are well established and strictly adhered to by most fan manufacturers. Because of this, fans are often treated like commodities instead of important pieces of HVAC equipment that should be carefully and thoughtfully selected.

Centrifugal fans are the most widely used type of fan in the HVAC industry. For that reason, this TDP module is geared primarily towards centrifugal fans.

We will examine fan construction, types of fans, the fan laws that govern centrifugal fan performance, stability factors, and the effects of field application of fans (system effect).

At the end of this TDP, the reader should have an understanding of the technical issues involved to properly select and apply the correct fan for a commercial HVAC system.

Fan Types

A fan is a device used to produce a flow of air. Fans are classified into two general types, centrifugal and axial.

Centrifugal Fans

Centrifugal fans are classified according to impeller (wheel) blade design. The most commonly used impeller designs for centrifugal fans for comfort air conditioning are forward- curved, backward-inclined, and airfoil. Impellers and their applications will be covered in this TDP module.

The air is drawn in through one or both sides of the centrifugal fan impeller and is discharged at a right angle to the fan shaft. A centrifugal fan impeller is usually enclosed in a housing also called a scroll. The air is discharged from the impeller through the outlet in the fan housing. When this housing is mounted inside an insulated cabinet, it comprises the fan section of an air handler. Refer to TDP-611, Central Station Air Handlers for further information.

Air is discharged at a right angle to fan shaft

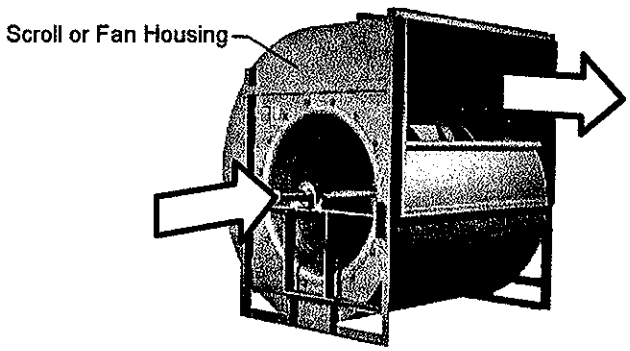

Figure 1

Centrifugal Fan Configuration

Plenum Fans

When centrifugal airfoil impeller is applied without the housing, and is located inside a cabinet, it is called a plenum fan. Plenum fans will be covered also in this TDP module.

Single-width, single-inlet airfoil impeller design, for mounting inside a cabinet

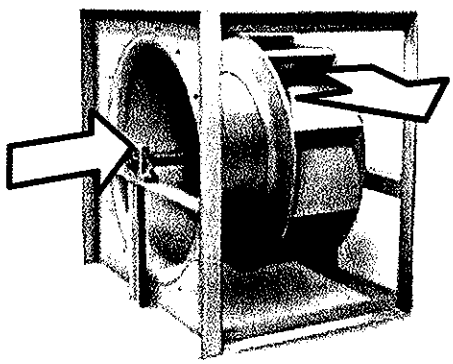

Figure 2

Plenum Fan Configuration

Axial Fans (In-line)

In an axial fan, air flows and is discharged parallel to the fan shaft, not at right angles to the fan shaft as with a centrifugal. Axial fans are classified as propeller, tube axial, and vane axial. These fans (with the exception of the propeller) have a tubular configuration, hence the term "in-line." Vane, or tube axial, fans can be driven with an internal direct connected motor or an external shell mounted motor.

There are several variations on an axial or in-line fan that we will cover in this TDP module. The first utilizes a centrifugal impeller in an in-line cylindrical tube configuration. Air is discharged from the impeller and turns 90 degrees in the shell before flowing through straightening vanes.

The second is a hybrid between a centrifugal and an axial. It is called a mixed flow fan. Air is discharged off a centrifugal type impeller that has angled blades. The air then exits the cylindrical tube that houses the fan.

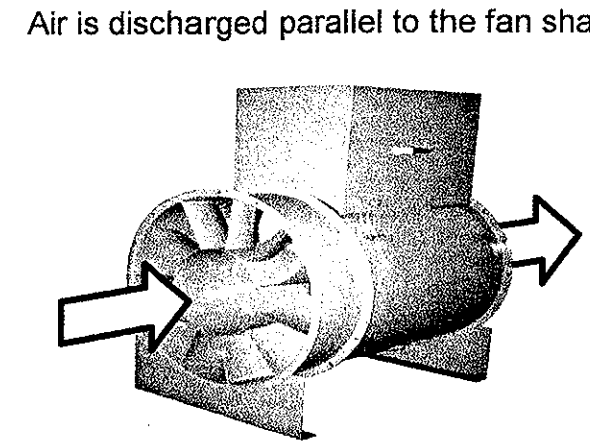

Figure 3

Axial Fan Configuration
Photo courtesy of Barry Blower

Centrifugal Fans

Shown here are the components of a double-width double-inlet (DWDI) fan assembly. This is essentially two single-width fans, side by side, with two inlets and a single outlet or discharge with no partition in the scroll housing. A single-width single-inlet fan (SWSI) would have a single inlet and take up less space from a width standpoint, but would need to be of greater diameter than the DWDI to move the same volume of airflow. SWSI fans are often applied where it is necessary to mount the fan motor out of the air stream, for example corrosive air. DWDI designs are more common in HVAC equipment.

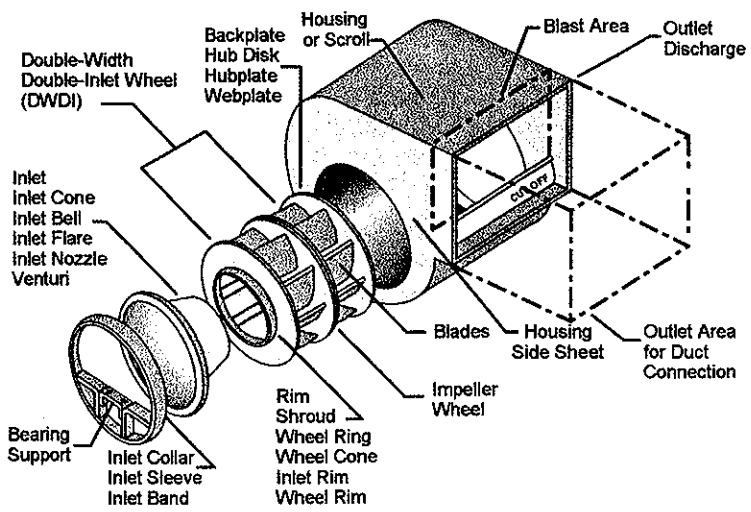

Figure 4

Centrifugal Fan Construction and Terminology (DWDI Fan)

The following are some of the basic components that make up the fan assembly:

- Bearing support – supports the fan shaft bearing on both inlet sides of the scroll housing
- Inlet collar – attaches the bearing support to the fan housing
- Inlet cone – an aerodynamic inlet design used to reduce entrance losses of the fan (used on backward inclined and airfoil fans)
- Impeller – the round assembly containing multiple fan blades that is attached (keyed) to the fan shaft. The impeller (also called the wheel) spins to move the air from inlet to discharge.
- Fan blades – parts of the impeller that are mounted to the hub that force the air to move; the types of blades define the fan capability and application
- Wheel backplate or hub – supports the impeller blades and allows the fan wheel assembly to mount to the fan shaft (not shown)
- Fan shaft – the round piece of precision-ground steel that the wheel is fastened to that in turn is driven by the fan motor normally through pulleys to spin the wheel. The fan shaft may also be direct coupled to the motor. This is called direct drive.
- Fan scroll housing – the fan scroll housing is the sheet metal wrapper that leads the air-stream from the fan wheel inlet to the discharge outlet
- Cut off – a plate that is positioned under the blast area that is designed to give the fan the desired discharge characteristics and performance
- Blast area – the open discharge area of the fan scroll housing, which is above the cutoff
- Fan outlet – the part of the fan scroll housing that will connect to the discharge ductwork

Impeller Design

Shown here is a radial fan impeller (wheel) with straight blades. We have chosen to show this straight impeller design as a way to examine the vectors related to the fan blades. This straight blade designed centrifugal impeller is often used for material handling in industrial plants. Later we will show the curved impeller designs and vector characteristics for the centrifugal fan types used in HVAC applications. In this and other blade vector diagrams we will show later, V1 represents the radial velocity component leaving the wheel, V2 represents the tangential velocity leaving the wheel. V2 is equal to the tip speed of the blade. VR is the velocity resulting from the V1 and V2 vectors and is the velocity relative to the fan scroll housing. The relative length of VR is a function of the blade design and the tip speed

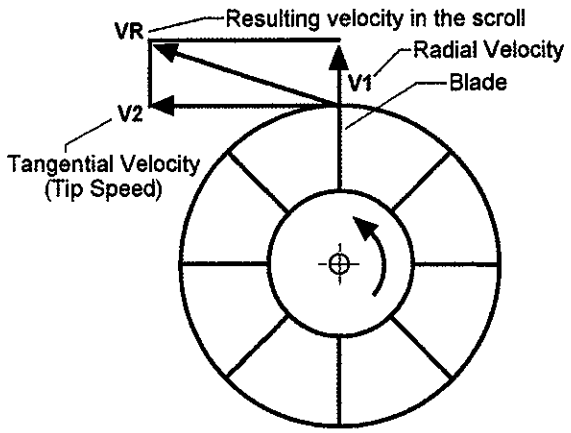

Figure 5

Impeller Velocity Vectors

Tip speed is a function of fan RPM. Certain impeller designs can be spun at lower speed than others to produce the same airflow. As an example, as we will see, a forward-curved impeller produces a large VR relative to tip speed, versus an airfoil. So a fan with a forward-curved impeller can be operated at a lower rpm than the airfoil.

For all fans, the impeller type used develops a total pressure difference over the inlet and outlet air streams. The total pressure (P_T) rise comprises two main components. The first is static pressure (P_S), which depends on the blade profile, number of blades, pitch (angle), and other aerodynamic characteristics of the fan impeller. The second component is velocity (dynamic) pressure (P_V), which develops due to velocity or kinetic energy imparted to the air stream.

Static pressure is the "bursting" pressure in all directions in the ductwork created by the fan. Velocity pressure is the pressure in the direction of airflow.

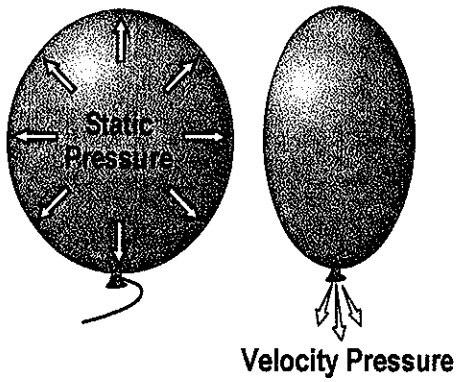

Figure 6

Static and Velocity Pressures

Forward-Curved

On a forward-curved centrifugal fan, the impeller blades are curved as can be seen here. The air leaves the wheel (VR) at a velocity greater than the tip speed (V2) of the blades. Tip speed is a function of wheel rpm. Since this impeller blade design results in such a large VR, the wheel rpm can be reduced and still produce a comparable airflow to other blade designs. Airfoil and backward inclined, which we will discuss, must be rotated at higher speed. At a given airflow capacity, the forward-curved fan impeller can often utilize a smaller diameter wheel.

Speed

Because the forward-curved fan can be rotated at slower speeds and is used for lower static pressures, it is a lightweight design and is therefore less expensive. The fan wheel has 24 to 64 shallow blades with both the heel and the tip of the blade curved forward. This fan is used primarily for low-pressure HVAC applications. Forward-curved fans are best applied operating at static pressures up to 5.0 in. wg.

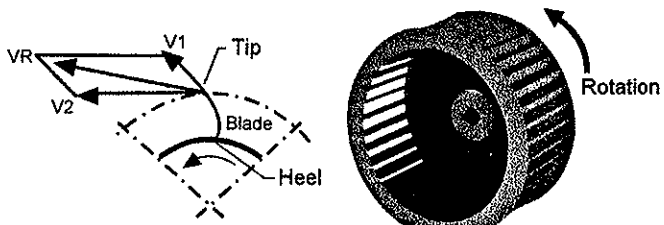

Characteristics:

- Most commonly used wheel in HVAC
- Light weight – low cost
- Operates at static pressures up to 5 in. wg max
- 24 to 64 blades
- Low rpm (800 to 1200 rpm)

Note

Figure 7

Forward-Curved Wheel Design

Forward-curved wheel designs, like all centrifugal fan wheels, should be used in clean environments. Operating in dusty or dirty environments could result in an unbalanced fan wheel.

Forward-curved centrifugal fans have an overloading horsepower characteristic as the airflow through the fan increases at a constant rpm. This is why forward-curved centrifugal fans are called overloading type fans.

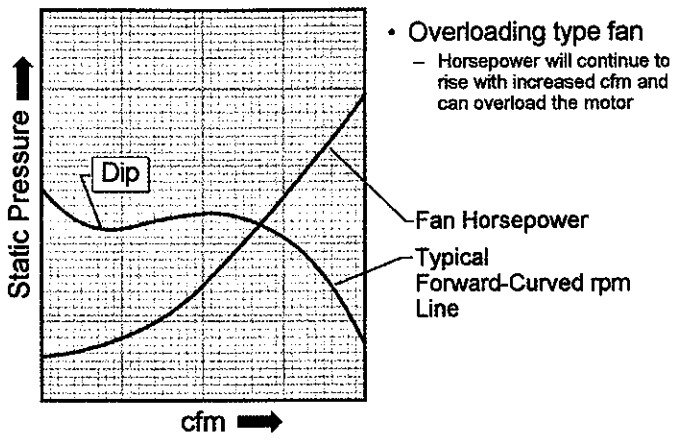

Figure 8

Forward-Curved Centrifugal Fan Characteristics

A typical example of an overloading situation is where a forward-curved centrifugal fan is used for temporary heat duty in an unfinished building. If the ductwork is not completed, the resistance of the duct system may be lower than design, and the fan can deliver more air than required and may eventually overload the motor.

It may be noted that the static pressure-cfm curve of a fan using a forward-curved wheel has a somewhat gradual slope and also contains a "dip." That is how you can recognize a forward-curved application, versus an airfoil or backward-inclined impeller application, which will have a steeper slope and no dip. The dip in the curve of the forward-curved centrifugal fan is to the left of peak pressure. When making fan selection with a forward-curved centrifugal fan, it should be made to the right of the dip to avoid unstable fan operation.

Centrifugal Forward-Curved Housing

The housing is an aerodynamic scroll configuration, which promotes the conversion of velocity pressure from the impeller to static pressure for the duct system. The fan housing width will vary based on whether or not the fan wheel inside is a single width single inlet, or double width double inlet type. With forward-curved fans, the scroll design is critical for the conversion of velocity pressure to static pressure and the inlet design is of secondary importance.

Airfoil and Backward-Inclined

The airfoil impeller is shown below. The airfoil blades have a cross section similar to an airplane wing. Airfoil blades have a thickness that forward-curved and backward-inclined blades do not. A backward-inclined impeller is a thinner (single thickness) bladed airfoil and has an efficiency only slightly less than an airfoil. A backward inclined (BI) impeller will have single thickness blades that are inclined away from the direction of rotation. Fans with airfoil and backward-inclined impellers have the highest efficiency of all centrifugal fans.

Each airfoil and backward inclined impeller uses approximately 8 to 18 blades inclined backward from the direction of rotation. Because of this, the air leaves the wheel (VR) at a velocity less than the blade tip speed (V2). For a given duty, fans with these impellers will have the highest wheel speed. Fans with airfoil impellers are designed to operate, depending on the fan

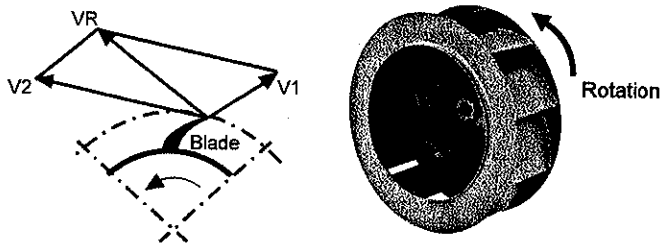

Characteristics:

- Blades are curved away from direction of rotation
- Static pressure up to 10 in. wg
- 8 to 18 blades
- High rpm (1500 to 3000 rpm)

Figure 9

Airfoil Wheel Design

Backward-inclined and airfoil fan wheels are considered "non-overloading" because they have the characteristic of almost constant power consumption for the same operating speed (rpm). Some engineers like to use airfoil instead of forward-curved centrifugal fans (when the choice exists) for that reason, even though they cost more than forward-curved fans. In those areas of applications where either type of fan could be used, it is prudent to make both selections and compare.

size and the manufacturer, at static pressures up to 10 in. wg or higher. Fans with airfoil impellers are not typically used at the static pressures where forward-curved centrifugal fans are the best choice such as less than approximately 5 in wg.

Typically, fans with airfoil impellers are used primarily in large air handlers for systems having relatively high static pressure requirements. Since they are capable of higher static pressures and operate at higher speeds, they are more ruggedly built, which adds to their cost and weight.

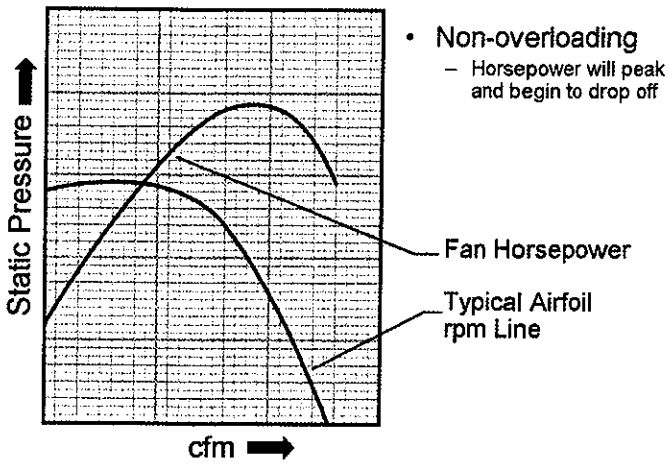

Figure 10

Airfoil Centrifugal Fan Characteristics

Centrifugal airfoil and backward-inclined housing

The housing design for an airfoil and backward inclined centrifugal fan is similar to the housing for a forward-curved. However it is more critical to maintain close clearance and alignment between the impeller and the inlet in order to maintain the high efficiency.

Plenum Fan

Plenum fans use non-overloading, single-width single inlet (SWSI) centrifugal airfoil impeller designs constructed of heavy gauge steel with each blade continuously welded to the wheel cone. The fan and its motor operate un-housed within a pressurized plenum or cabinet. When this type of fan utilizes a motor external to the plenum, it is called a plug fan. In a central station air handler, the plenum is the unit casing provided by the manufacturer. Ductwork is connected directly to the plenum without an intermediate transition. In essence, plenum fans use their plenum enclosure as a fan scroll.

Plenum fans do not discharge air directly off their impeller and into a discharge duct. The fan pressurizes the plenum it is located in and air is discharged out of the various openings, which are typically field cut into the plenum. For this reason, fan discharge noise is absorbed in the plenum cabinet. This makes the plenum fan ideal for acoustically sensitive fan applications.

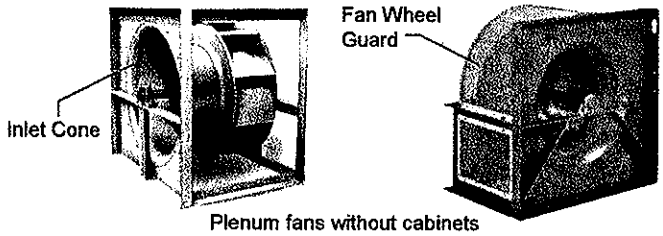

Characteristics:

- Single-Width, Single-Inlet (SWSI)
- Operate at static pressures up to 10 in. wg
- Best application with limited space or when multiple duct discharge is desired

Figure 11

Plenum Fan Characteristics
Courtesy of Barry Blower

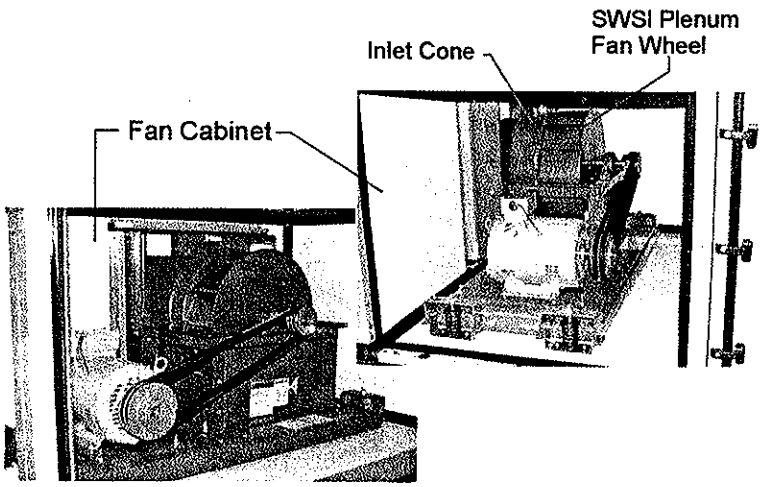

Figure 12

Plenum Fans with Cabinets

Notice the developed inlet cone design to the single inlet airfoil wheel. This allows the fan to efficiently develop static pressure within the wheel.

An important reason that makes plenum fans so popular is that they allow for flexibility in discharge arrangements. The plenum fan may also reduce the space required in the mechanical room for the air-handling unit and the discharge ductwork.

Plenum fans

Axial (In-line) Fans

Axial (also called in-line) fans are often used for high cfm, low to medium-static applications. The design of the in-line fan allows for direct connection to supply or return ductwork, which can save space in the mechanical room. Axial fans are often applied as return fans as part of a supply-return fan system. They are also used for exhaust air applications and can even be fitted into factory fabricated air-handling units for supply duty.

- **Use for high cfm applications**
- **In-line space savers with no cabinet**
- **Often used in industrial AC and ventilation applications**
- **Impeller similar to prop fans but blades are more aerodynamic**
- **Often used for return fans in AC applications**

One major difference from centrifugal fans is that air is discharged parallel to the shaft on an axial fan.

Propeller fans are a type of axial fan that is not typically ducted. They are used for moving high volumes of air at very low static pressures. Propeller fans operate at low rpm and are an inexpensive design.

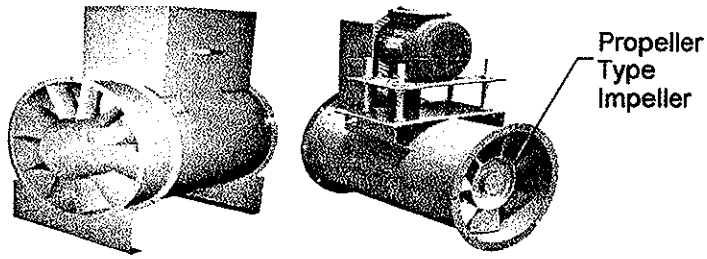

Figure 13

Axial (In-line) Fans
Photo courtesy of Barry Blower

Tube axial fans use a fan design with a propeller type impeller (but with a more aerodynamic configuration) inside a cylindrical tube. They may come with a sound attenuating accessory to help reduce noise levels. Tube axial fans offer a greater efficiency than propeller fans and can be ducted.

Vane axial fan designs are similar to tube axial but incorporate guide (straightening) vanes on the discharge to help redirect the air and improve efficiency. Some vane axial fans have a moveable impeller blade capability. The pitch or angle of the blades can be varied based upon the static pressure and airflow required. The blade angle can be changed manually or automatically.

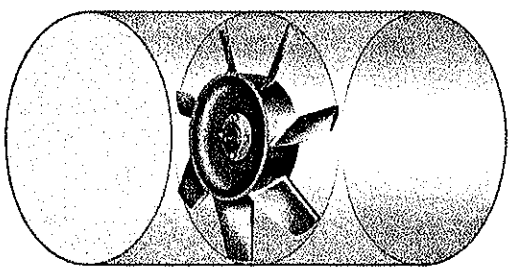

- **Axial Wheel**
  - **–Air discharged parallel to the shaft**
  - **–Air is often redirected via straightening vanes making the fan a vane axial**

Figure 14

Axial Impeller Design
Photo Courtesy of Barry Blower

The impeller design of an axial fan wheel is similar to a propeller except that the blades are more aerodynamic.

Axial fans are often referred to as in-line or tubular fans. However, not all in-line (or tubular) fans use conventional axial designed impellers.

For instance, another version of an in-line fan actually uses a centrifugal impeller. It is called a tubular centrifugal. Even though this fan uses a centrifugal impeller, its overall tubular configuration resembles that of an axial so we have placed it in the axial section of this TDP module.

A centrifugal impeller is mounted in an in-line (tubular) housing and air is redirected out via straightening vanes just as in a vane axial. A tubular centrifugal takes advantage of the efficiencies of a centrifugal impeller and the space-saving configuration of an in-line design.

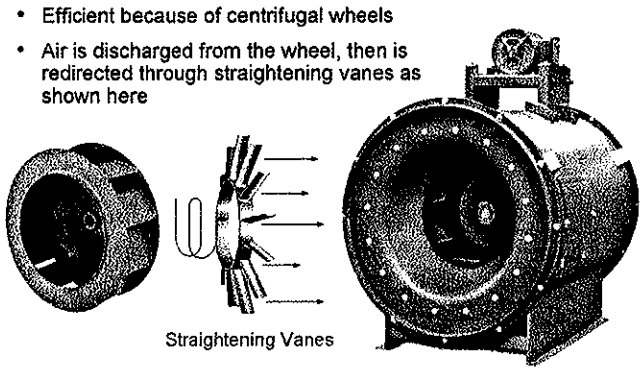

Figure 15

Tubular Centrifugal In-Line Fan
Photo Courtesy of Barry Blower

Mixed Flow Fan

Mixed flow fans can be used for return air, supply air, or general ventilation applications where low sound level and good efficiencies are important.

The mixed flow wheel design combines the working properties of both axial fans and tubular centrifugal fans. Mixed flow fans draw the air in and exhaust it in a more linear fashion, resulting in a more efficient system, which, in turn, reduces motor horsepower requirements.

Another advantage to the mixed flow design is the reduced sound. Mixed flow fans run at lower rpm to deliver the same amount of airflow. As a result of slower wheel speed, sound generation is reduced significantly.

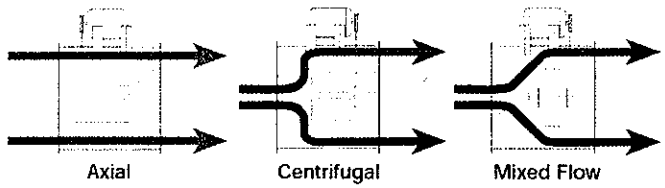

Figure 16

In-line Fan Types
Photo Courtesy of Greenheck.

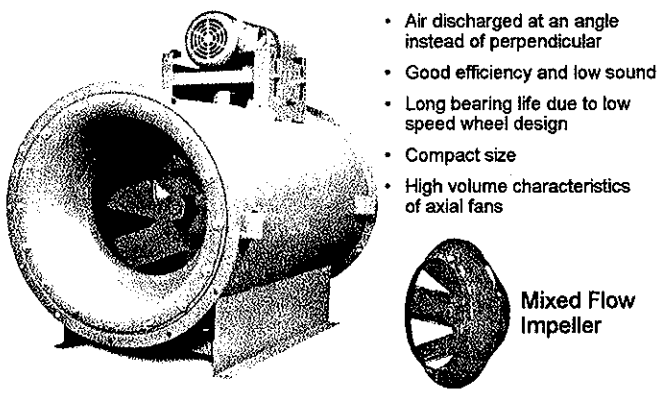

Figure 17

Mixed Flow Fan
Photo Courtesy of Barry Blower

Axial Fan Housing Design

The housing design for axial fans is a cylindrical tube. The tube axial and vane axial fans are built with close tolerances from the blade tips to the sidewall of the tube or shell. On the tubular centrifugal and mixed flow design, the clearance to the wheel is not as critical since the air comes off these impellers and must be turned to exit the shell.

In an axial fan, the motor may be internal to the shell in a direct drive configuration or externally mounted on the shell in a belt drive configuration. The benefits to direct drive are there are fewer components to wear since there are no pulleys and belts. Also, the overall unit can be more compact than the equivalent belt driven model. With direct drive, the motor is in the air stream, which helps the efficiency by cooling the motor.

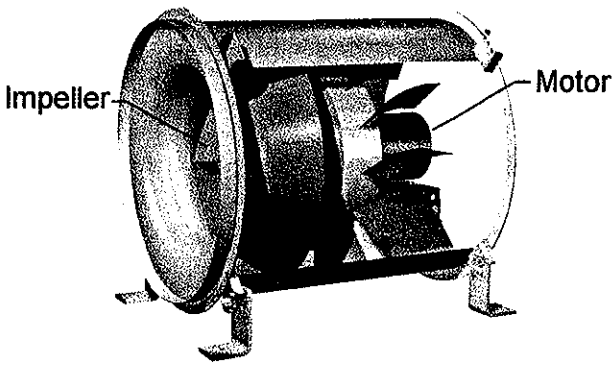

Figure 18

Direct Drive Axial Fan
Photo Courtesy of Greenheck

Belt drive units position the motor out of the air stream for easy access and service. Also, system airflow adjustments can be accomplished by simply changing pulleys. Discharge sound levels are also less with a belt driven model

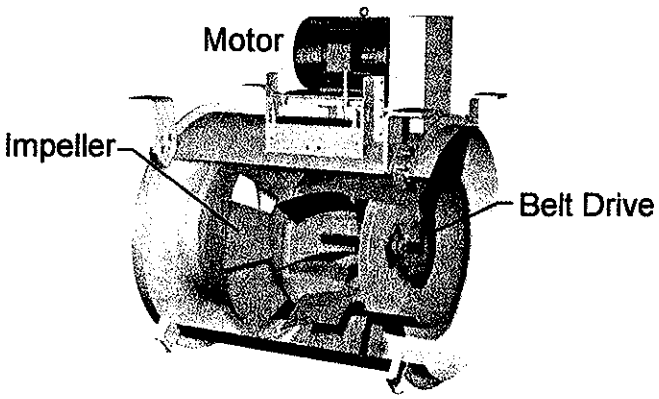

Figure 19

Belt Drive Axial Fan
Photo Courtesy of Greenheck

Vane axial, tube axial, and mixed flow fans are typically controlled by VFDs when used in variable air volume systems. Other means of control include the use of inlet vane dampers and/or control dampers. The use of both of these devices is on the decline in favor of VFDs.

AMCA Fan Classes

AMCA (Air Movement and Control Association) is an international, non-profit organization, dedicated to the certification of performance ratings on fans, louvers, dampers, and other air-handling equipment. AMCA provides fan manufacturers an independent third party verification of their performance ratings.

There are eight certified programs covered by AMCA. For the purposes of this TDP module, the most important programs are Air Performance and Sound Performance.



Figure 20

AMCA

AMCA Class	Maximum System Static Pressure
I	4 in. wg
II	7 in. wg
III	12 in. wg

Figure 21

AMCA Fan Classes

AMCA categorizes centrifugal fans into three performance/construction classes (Class I, II, and III) based on certain defined operating criteria. Each different class corresponds to a certain maximum total pressure at which the fan will operate. This chart shows the maximum pressure limits for each fan class.

Fan construction class ratings are based on the outlet velocity from the fan discharge and the total system static pressure. Most fan discharge velocities are designed around 2500-3000 fpm.

To go to a higher class, manufacturers may use different methods. Some may increase metal gauge, shaft diameter, add tip material, change to a higher strength material, etc. The bottom line is that the added loads of the higher speeds must be accommodated in the design.

If you run a Class II wheel in a Class I condition, it should last longer than a Class I wheel in the Class II conditions.

A Class II wheel running in Class II conditions will not necessarily last longer than a Class I wheel in Class I conditions.

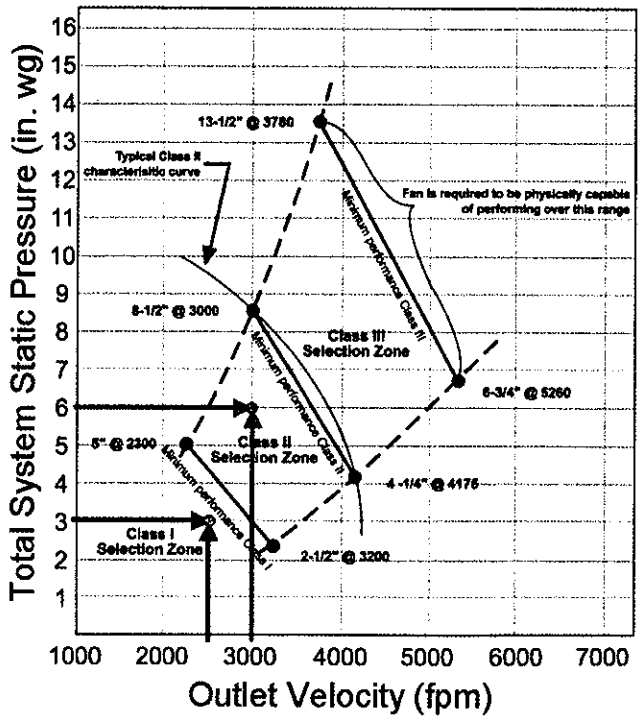

Figure 22

AMCA Centrifugal Fan Construction Class

The cost of Class III construction is usually prohibitive to be used for Class I conditions.

Here are two examples of how to determine fan class using the chart in Figure 22. If the fan discharge velocity is 3000 fpm and the total system static pressure is 6 in. wg, the operating conditions fall within the AMCA Class II range and a Class II fan should be considered for this application. If the fan discharge velocity is 2500 fpm and the total system static pressure is 3 in. wg, the operating conditions fall within the AMCA Class I range and a Class I fan could be used for this application.

Performance Ratings and Static Efficiency

One of the early methods for rating centrifugal fans for HVAC applications was a multi-rating table. A typical multi-rating table shows the wheel speed (rpm) and brake horsepower (bhp), of the fan for various combinations of air flow rate (cfm), outlet velocity (fpm) and static pressure (sp). The disadvantage of multi-rating tables was that interpolation was frequently necessary to obtain specific values such as fan speed. Tabular ratings of this type do not give the user a graphical representation of the fan characteristics, performance, or efficiency.

VOL	VEL	1/4" SP		3/8" SP		1/2" SP		5/8" SP		3/
CFM	FPM	RPM	BHP	RPM	BHP	RPM	BHP	RPM	BHP	RPM
6032	800	391	0.36	431	0.48	471	0.60	518	0.76	557
7450	1000	448	0.52	484	0.68	517	0.82	549	0.98	580
9048	1200	508	0.74	541	0.92	571	1.11	600	1.29	627
10556	1400	573	1.02	601	1.23	629	1.44	655	1.66	681
12064	1600	639	1.38	664	1.61	689	1.85	713	2.10	736
13572	1800	706	1.82	729	2.08	752	2.35	774	2.62	795
15080	2000	774	2.36	796	2.65	816	2.94	836	3.24	856
16588	2200	843	3.01	863	3.33	882	3.65	901	3.97	919
18096	2400	913	3.78	931	4.12	949	4.47	966	4.82	984
[illegible]	2600	982	[illegible]	[illegible]	[illegible]	[illegible]	[illegible]	1033	[illegible]	[illegible]

Figure 23

Centrifugal Fan Multi-Rating Table

Preferred alternatives to multi-rating tables are fan curves. Figure 24 shows an example of a fan curve from years ago. The cfm was plotted on the horizontal axis, with static pressure (in.wg) plotted on the vertical axis. This happens to be a high static capable airfoil type fan curve. At the intersection of these two required values, the fan speed may be read from the family of speed curves.

As an example, a selection at 26,000 cfm and 6 in. wg static pressure requires a fan rpm of 1800.

The bhp was often represented on yet another curve (not shown here).

There are several advantages to selecting with curves. Static efficiency lines (SE) may be provided as shown. Maximum static efficiency (MSE) is measured in percentages; MSE defines the most efficient operating range of the fan, but does not define an actual value of efficiency. Below curve C, in this example, the actual static efficiency drops to less acceptable performance limits.

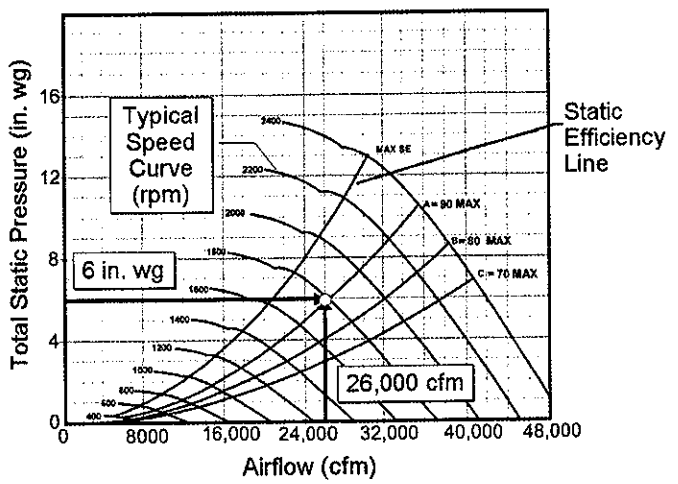

Figure 24

Centrifugal Fan Curve Example

Our example point at 26,000 cfm and 6 in. wg fell on the 90% SE line, so that is an efficient operating point.

When selecting the type of fan in an air conditioning system, the goal is to keep the energy input low, while having a stable selection. For centrifugal fans, the forward-curved impeller is the lowest in static efficiency at approximately 65-70%. The backward-inclined is a higher efficiency fan at 75 to 80% static efficiency. The airfoil impeller, which is a refinement of the backward-inclined design, is the most efficient at approximately 80-85% static efficiency.

The best fan selections

are those whose point of operation (rated point) ends up near (preferably slightly to the right) of the MSE (maximum static efficiency) line.

Fan Laws

Fan laws are a series of equations that can predict the performance of fans at any operating condition. However, to use the fan laws, a known condition of operation is required as a starting point.

Fan laws predict the airflow (cfm), static, velocity or total pressure and required brake horsepower (bhp) at varying fan speeds (rpm) and air densities. Designers of HVAC systems are usually interested in knowing the behavior of a given fan operating within a given duct system. Under these circumstances the following fan laws are applicable.

The most commonly used fan laws in simplified form are:

cfm varies DIRECTLY with rpm

P_S varies with the SQUARE of the rpm

bhp varies with the CUBE of the rpm

Figure 25

The Three Main Fan Laws

Here are the three most widely used fan laws. Others involving density and air temperature changes from standard are listed in the Appendix.

First Fan Law:

- cfm varies directly with the fan speed.

$$\frac{cfm_1}{cfm_2} = \frac{rpm_1}{rpm_2} \quad \text{and} \quad rpm_2 = rpm_1 * \left[\frac{cfm_2}{cfm_1}\right]$$

Second Fan Law:

- Total system static pressure or system resistance varies as the square of the fan speed.

$$\frac{P_{S1}}{P_{S2}} = \left[\frac{cfm_1}{cfm_2}\right]^2 = \left[\frac{rpm_1}{rpm_2}\right]^2 \quad \text{and} \quad P_{S2} = P_{S1} * \left[\frac{rpm_2}{rpm_1}\right]^2$$

Third Fan Law

- Brake horsepower varies as the cube of the fan speed.

$$\frac{bhp_1}{bhp_2} = \left[\frac{cfm_1}{cfm_2}\right]^3 = \left[\frac{rpm_1}{rpm_2}\right]^3 \quad \text{and} \quad bhp_2 = bhp_1 * \left[\frac{rpm_2}{rpm_1}\right]^3$$

Density Effects

At a steady fan rotation (rpm), a fan is a constant displacement device. It will move the same airflow (cfm) regardless of the density of the air being handled. Fans are rated based on standard air conditions. Standard air has a density of 0.075 lb/ft^3. This density is the same as that of dry air at 69.8° F and a barometric pressure of 29.92 in. Hg or 14.696 psia.

For example, if a fan can move 5000 cfm at standard air conditions, at the same speed, it will move 5000 cfm of air at 200° F. However, the density of air at 200° F is 80 percent of the standard air density at 69.8° F, therefore only 80 percent of the horsepower is required to move it.

Air Density Factors

Altitude (ft.)	Temperature			
	70	100	200	300
0	1.000	.946	.803	.697
1000	.964	.912	.774	.672
2000	.930	.880	.747	.648
3000	.896	.848	.720	.624
4000	.864	.818	.694	.604
5000	.832	.787	.668	.580
6000	.801	.758	.643	.558
7000	.772	.730	.620	.538
				.518

Figure 26

Fan Laws — Air Density Factors

Because the mass flow of air at 200° F is only 80 percent (0.803 from table) of the mass flow at 69.8° F, the fan will create only 80 percent of the velocity and static pressures. The reduction in static pressure will be proportional to the horsepower; therefore, the static efficiency of the fan will remain unchanged. For example as shown above, at 6000 feet above sea level, the density of air at 69.8° F is approximately 80 percent (0.801 from table) of standard air density. At this elevation, the fan would perform in the same as described when handling air at 200° F at sea level.

Other Fan Laws

When the density of the air due to altitude or temperature is considered, there are additional fan laws that apply. These are shown in the Appendix section.

It is important that the system designer understand the basic characteristics of fans. Once the required airflow is known (recirculation or exhaust), the best way to evaluate the system is at standard air conditions. Adjustments can be made in the system to ensure the desired mass flow is being provided when the density of the air handled by the fan differs significantly from standard air density fan ratings.

Example: Using the Fan Laws

An engineer estimates that his duct static resistance will be 2.5 in. wg for an 8500 cfm air-handling system installed in a nursing home. Filter resistance is 0.50 in. wg, cooling coil resistance is 1.1 in. wg, and heating coil resistance is 0.4 in. wg for a system static pressure of 4.5 in. wg. An airfoil centrifugal fan is selected and submitted with the following fan curve. The resulting rpm is 2539 and the bhp is 11.2.

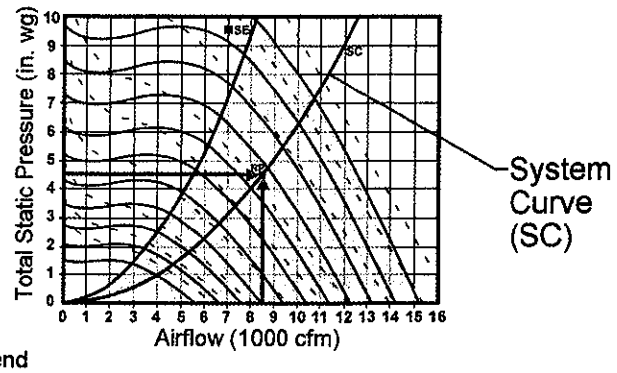

Legend

rpm bhp **MSE** - Max. Static Eff. **SC** -System Curve **RP** - Rated Point
rpm = 2539 bhp = 11.2 Class II Max. rpm = 2950
rpms (*100, L to R): 12 14 16 18 20 22 24 26 28 30 32
bhps (L to R): 1.5 2 3 5 7.5 10 15 20 25
Note: Shaded Area -- Recommended Operating Range

Figure 27

Example: Using the Fan Laws

During the actual installation of the duct system, the architect decided to change the ceiling from a flat suspended ceiling to a more "aesthetically pleasing" tray ceiling. This requires four additional elbows and other duct changes to be added to the supply and return ductwork, which raised the supply duct static resistance another 0.75 in. wg by the engineer's calculation. The new total static pressure will be 5.25 inches. Using the fan laws, what will the new fan rpm and motor horsepower be?

Using the second fan law to solve for the new rpm:

$$\frac{P_{S1}}{P_{S2}} = \left[\frac{rpm_1}{rpm_2}\right]^2 \text{ or } \sqrt{\frac{P_{S1}}{P_{S2}}} = \frac{rpm_1}{rpm_2}$$

$$rpm_2 = rpm_1 * \sqrt{\frac{P_{S2}}{P_{S1}}}$$

$$rpm_2 = 2539 * \sqrt{\frac{5.25}{4.5}}$$

$$rpm_2 = 2742 \ rpm$$

Where:

P_S = total system static pressure
Condition 1 = known condition
Condition 2 = new condition

Using the third fan law to solve for the new brake horsepower:

$$\frac{bhp_1}{bhp_2} = \left[\frac{rpm_1}{rpm_2}\right]^3$$

$$bhp_2 = bhp_1 * \left[\frac{rpm_2}{rpm_1}\right]^3$$

$$bhp_2 = 11.2\,hp * \left[\frac{2742}{2539}\right]^3$$

$$bhp_2 = 14.1\,bhp$$

Where:

bhp = fan brake horsepower
Condition 1 = known condition
Condition 2 = new condition

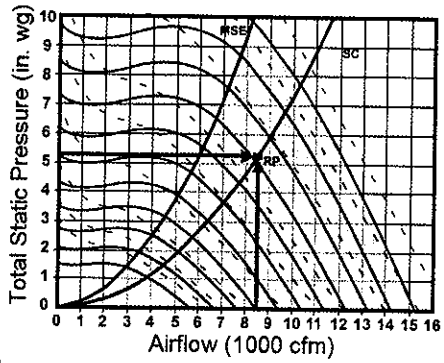

Legend
rpm bhp **MSE** - Max. Static Eff. **SC** -System Curve **RP** - Rated Point
rpm = 2539 bhp = 11.2 Class II Max. rpm = 2950
rpms (*100, L to R): 12 14 16 18 20 22 24 26 28 30 32
bhps (L to R): 1.5 2 3 5 7.5 10 15 20 25
Note: Shaded Area – Recommended Operating Range

Figure 28

Using the Third Fan Law

After calculating the new rpm and horsepower, we need to make sure that we have not exceeded the fan or motor's capability. A quick check of the maximum fan rpm shows us that we have not (Class II max rpm 2950). The original fan selection required 11.2 bhp so a 15 hp motor was selected. The new horsepower requirement is 14.1 hp, so the motor will not need to be changed.

Analyzing this one step further, what would be the additional energy cost because of the architect's change? Given the following:

Operating hours per day	18 hours
Days of operation	365 days
Additional motor horsepower	2.9 bhp
Motor efficiency	92%
Electrical rate	$0.10435 per kWh

$$= \frac{18\ hrs * 365 \times 2.9\ bhp * 0.746 kW / bhp * \$0.10435 / kWh}{.92}$$

Additional energy cost per year = $1,612

System Curve, Fan Stability, System Effect

System Curve

An air system may consist simply of a fan with ductwork connected to the inlet or the discharge, or both, as in an exhaust system. A more complex system could include a fan, supply and return ductwork, cooling and/or heating coils, filters, air mixers, mixing boxes, diffusers, zoning terminals, dampers, sound attenuators, etc. The function of the fan is to provide the required energy to the airstream to overcome the resistance to flow imposed by all the system components.

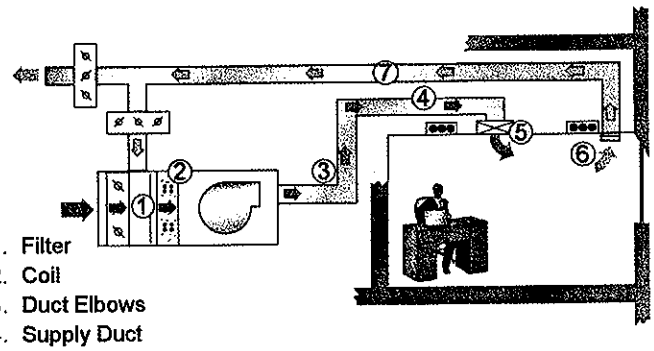

Figure 29

System Resistance Components

The component manufacturer usually provides the pressure loss or flow resistance for individual components. In addition, the pressure losses for the duct system must be determined. The procedure for determining duct resistance is discussed in TDP-504, Duct Design Fundamentals. Later in this module, the effects of field connections will be discussed to assist the designer in evaluating the effect of these items on final fan performance. The summation of all these resistances establishes the required fan total static pressure.

The system curve defines the volume flow rate versus pressure characteristics of the duct system in which a fan will be installed. For most applications, the volume flow rate to pressure relationship of a system is governed by the following equation, often called the "duct law." Notice it is the second fan law.

$$\frac{P_{S1}}{P_{S2}} = \left[\frac{cfm_1}{cfm_2}\right]^2 = \left[\frac{rpm_1}{rpm_2}\right]^2 \quad \text{or} \quad P_{S2} = P_{S1} * \left[\frac{cfm_2}{cfm_1}\right]^2$$

Once the system designer has determined the total system static pressure loss (P_S) for one airflow (cfm), it is very easy to calculate the corresponding pressure loss for any other flow rate. The system curve is not included on the fan performance curve when it is issued from the fan manufacturer since its determination must be left to the system designer.

A fan running at a particular speed can have an infinite number of operating points all along its system curve. The fan rpm line will intersect the system curve to produce a single operating point. There can be only one operating point at the intersection of the system curve and the fan curve.

Example: System Curve

Assume that a fan delivers 10,000 cfm against a total static pressure of 4.0 in. wg.

Find the duct system static pressure resistance to flow at 110%, 75%, 50% and 25% airflow:

$$P_{S2} = P_{S1} * \left[\frac{cfm_2}{cfm_1}\right]^2$$

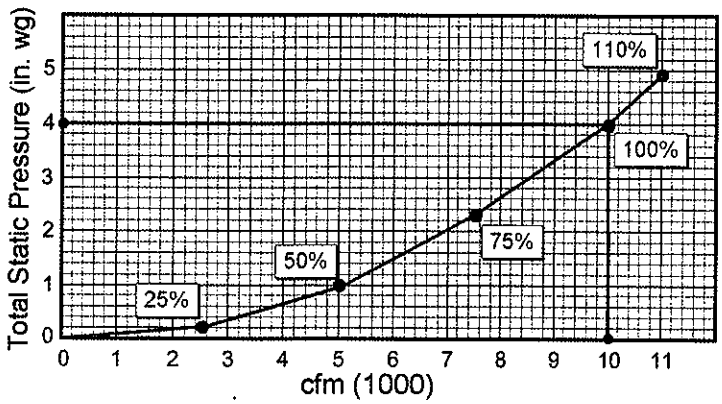

Known: Fan delivers 10,000 cfm at 4 in. wg total static pressure

Figure 30

System Curve

at 110% (11,000 cfm): $P_{S2} = 4.0 * \left[\frac{11,000}{10,000}\right]^2 = 4.0 * (1.21) = 4.84 \ \ in.\ wg$

at 75% (7500 cfm): $P_{S2} = 4.0 * \left[\frac{7500}{10,000}\right]^2 = 4.0 * (0.5625) = 2.25 \ \ in.\ wg$

at 50% (5000 cfm): $P_{S2} = 4.0 * \left[\frac{5000}{10,000}\right]^2 = 4.0 * (0.25) = 1.0 \ \ in.\ wg$

at 25% (2500 cfm): $P_{S2} = 4.0 * \left[\frac{2500}{10,000}\right]^2 = 4.0 * (0.0625) = 0.25 \ \ in.\ wg$

No two system curves are alike unless constructed identically and handling the same airflow.

System curves

look a lot like static efficiency lines, but as we can now see, they are two completely different concepts. Both of them are instrumental in conducting a fan system analysis.

Using the System Curve

The intersection of the calculated system curve and the fan pressure airflow curve (rpm line) is the rated point (RP). The resulting fan cfm and pressure can then be read.

However, in reality the as built duct system and other factors may result in a system curve with less resistance or greater resistance (dotted lines) than was estimated.

Figure 31 shows a situation where the duct system has more resistance to flow than was estimated. The calculated operating point is point ①. However, at the same fan speed and higher static pressure, the fan will operate at point ②. To get the design airflow at a higher static pressure, it is necessary to increase the speed of the fan so it will operate at point ③. Assuming the air quantity at ② is 90 percent of design, it will be necessary to increase fan speed by 10 percent. This will result in a large increase in fan horsepower, based on the third fan law. If the fan motor is already operating near its nominal horsepower rating, it will be necessary to replace it with a larger motor.

Quite often, system designers add a safety factor to compensate for an inaccurate or incomplete estimate of system static pressure losses. If the resulting system resistance is less than estimated, the fan will operate at point ④. There is no advantage to operating at this point – the fan may operate at a lower efficiency and may require more horsepower than at design flow. In this case, the fan speed should be reduced so that the fan will operate at point ⑤.

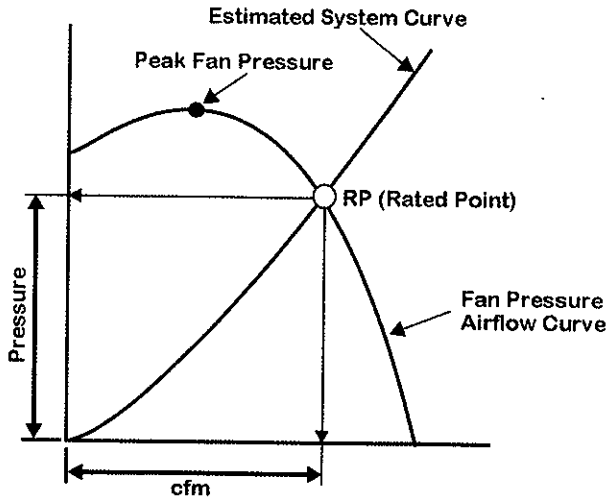

Figure 31

Intersection of System Curve and Fan rpm

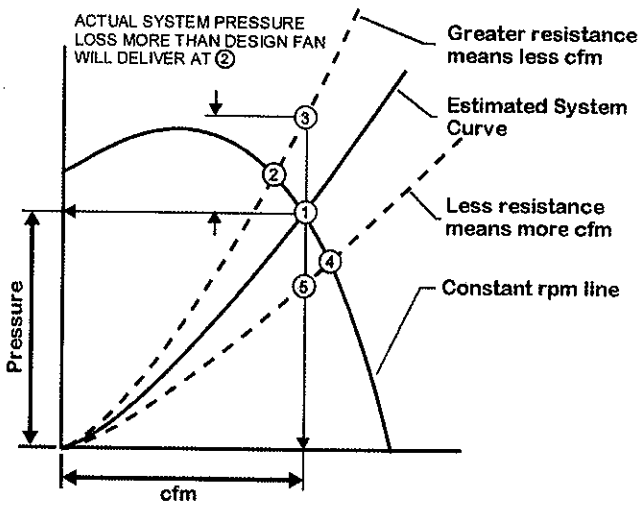

Figure 32

Variation from Estimated System Curve

Fan Stability

To learn about fan stability, we should discuss those factors that lead to fan instability. Fan instability occurs when the airflow through the fan surges or pulses due to turbulent airflow conditions. There are two causes of turbulent airflow through the fan. Incorrect duct connection at the discharge of the fan is the first cause. Turbulence in the area of the fan's cut-off plate can result.

Selecting the fan outside of its natural stability region is the second cause. If a fan is operated too far to the left of the maximum static efficiency line, uneven flow through the fan blades can result. The fan may not be able to maintain stable laminar flow under these low cfm and high static pressure conditions; turbulence will exist in part of the blade passage.

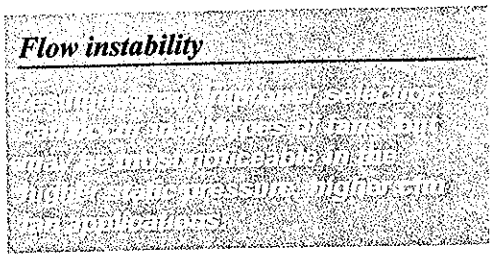

To avoid instability, care must be taken to select fans operating in a constant volume air system near their maximum efficiency point. When operating in a variable air volume (VAV) system, fans should ideally be selected to the right of the maximum efficiency curve for the design operating point. Because fans in VAV systems spend most of their operating hours at part load, this approach optimizes the efficiency and helps ensure that the fan operation does not drift too far to the left into the naturally unstable region.

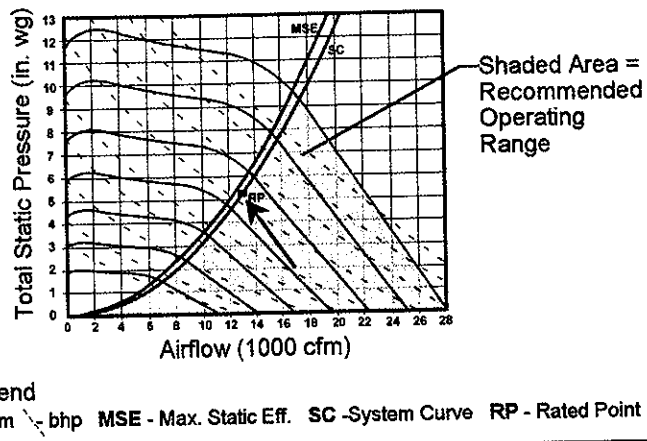

Figure 33

Fan Stability — Good Selection

Improper selection and installation can result in noise and vibration from the fan in the air handler. Here is an example of a potentially unstable fan selection because it was selected to the left of the maximum static efficiency line, well outside of the recommended area of operation. For a complete discussion on part load stability, refer to TDP-613, Fans in VAV Systems.

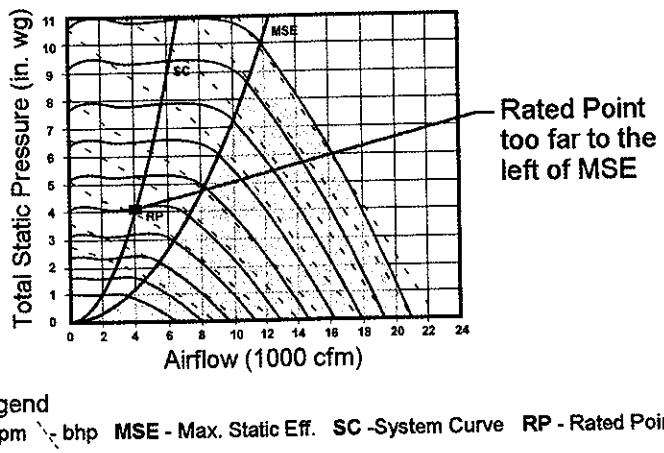

Figure 34

Fan Stability — Poor Selection

System Effect, with Example

If there is a difference between what the fan ratings say on paper and what is actually happening in the field, the explanation may be attributable to system effect. System effect refers to the conditions in a duct system that affect fan performance and related testing, adjusting, and balancing work. The subject of system effect usually arises after no allowance or consideration has been made for the effect of the duct system connection on the manufacturer's fan performance.

Estimating the impact of system effect is needed in order to arrive at a satisfactory fan selection.

Fan Test Station

Most manufacturers in the USA and Canada rate fan performance from tests made in accordance with the latest AMCA Standard Test Code for Air Moving Devices.

AMCA defines exact test procedures and conditions of fan testing so that fan ratings provided by various manufacturers are all on the same basis and can be compared.

In general, a fan is installed in an inlet duct test setup as shown in Figure 34. Centrifugal fans are tested with a discharge duct that is specified by AMCA. The duct connection to the fan is idealized to insure accuracy, consistency, and maximum fan performance. Any fan installation that deviates from this "idealized" inlet duct connection will not be able to deliver rated performance. The impact of system effect reduces fan performance.

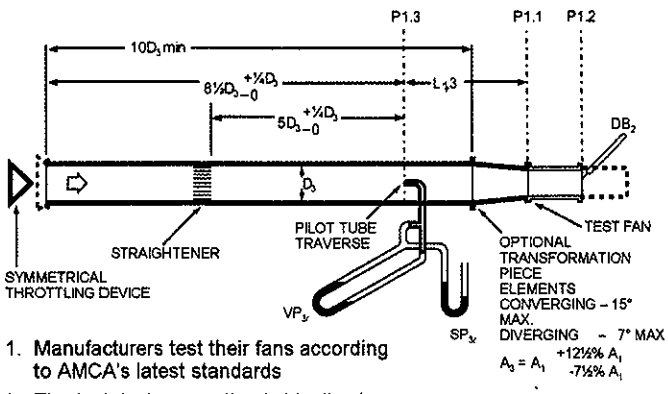

1. Manufacturers test their fans according to AMCA's latest standards
2. The test duct connection is idealized
3. Installations not meeting this ideal connection will have lower fan performance

Figure 35

Idealized Fan Test Station

Fan Velocity Profile

The velocity profile at the outlet of a fan is not uniform. The air tends to hug the outer portion of the fan housing – providing higher velocities at the top of the blast area and lower velocities at the bottom of the blast area. A straight section of duct at the fan discharge is required in order to establish a more uniform air velocity profile. To calculate 100% effective duct length, assume a minimum of 2.5 duct diameters. In the diagram this uniform velocity profile is established at the 100% "effective duct length" and mirrors that of the AMCA standard test setup. Failure to provide this straight section of discharge duct as shown will result in air turbulence and loss of fan performance.

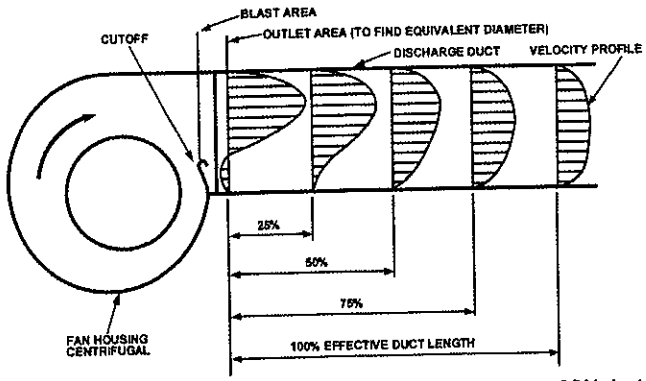

To calculate 100% effective duct length, assume a minimum of 2½ duct diameters, for 2500 fpm or less. Add 1 duct diameter for each additional 1000 fpm.

Example: 5000 fpm = 5 equivalent duct diameters.

If duct is rectangular with side dimensions a and b, the equivalent duct diameter is equal to $\sqrt{\frac{4ab}{\pi}}$

Figure 36

Fan Discharge Velocity Profile

Transition to Outlet Ducts

The first section of ductwork is required to transition to the main duct size. This transition must follow AMCA rules in order to minimize fan losses. The outlet duct area is to be no greater than 107.5 percent or less than 87.5 percent of the fan discharge outlet area. Further, the transition slope is not be to more than 15 degrees for a converging duct or more than 7 degrees for diverging duct.

For 100 percent effective diffusion to a uniform duct velocity the initial transition plus portion of the main duct must extend in a straight line for at least two and one-half equivalent duct diameters for duct velocities of 2500 fpm or less based on the duct width and height.

An additional duct diameter must be added for each additional 1000 fpm. An equivalent duct diameter for a rectangular duct is equal to the square root of the quantity: [(4 * width * height)/pi].

Losses-Outlet Ducts

Because it is virtually impossible to design a duct system identical to that used to test the fan, a system effect factor must be determined and added to the expected system resistance losses.

Example: Determination of System Effect for Outlet Duct on SWSI Fan.

Step 1: Find the fan's blast area to outlet area ratio.

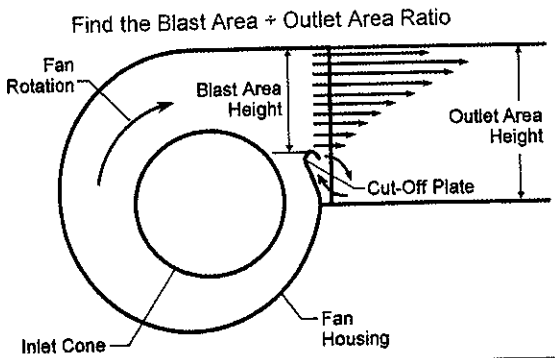

Figure 37

Step 1—Determine Fan Outlet Arrangement

Using the ratio of the fan's blast area/outlet area, find the system effect factor in the table (Figure 37). If this is not readily available, assume a ratio of 0.6.

Step 2: Use the Outlet Duct Table to find the system effect factor.

To determine the system effect factor, use the table shown.

You will need to establish the percent effective duct length that applies to your situation. Enter the table and determine the system factor curve(s) to use.

	No Duct	12% Effective Duct	25% Effective Duct	50% Effective Duct	100% Effective Duct
Pressure Recovery	0%	50%	80%	90%	100%
Blast Area / Outlet Area	System Effect Curve				
0.4	P	R-S		W	–
0.5	P	R-S		W	–
0.6	R-S	S-T	U-V	W-X	–
0.7	S	U	W-X	–	–
0.8	T-U	V-W	X	–	–
0.9	V-W	W-X	–	–	–
1.0	–	–	–	–	–

Determining system effect

- Find blast area/outlet area from Step 1 or use 0.6 if not known
- Determine effective duct length
- Enter table above to find appropriate letter for system effect
- Example: 0.6 and 25% effective duct (use curve U or V)

Figure 38

Step 2 — Losses - Outlet Duct Factors

Step 3: Use the system effect curves to find system effect factor.

Calculate the outlet duct velocity in fpm. Then enter the system effect curves and find the system effect factor.

With an outlet duct velocity of 2500 fpm, enter the curves below. Follow the 2500 fpm line until the U curve is reached. Read to the left and find the system effect factor to be 0.15 in. wg.

This is an additional resistance penalty the fan will operate against and must be added to the total system static pressure before selecting the fan.

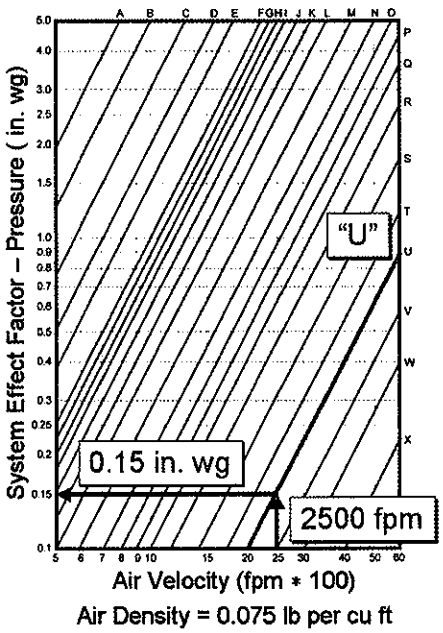

Figure 39

Step 3 — System Effect Curves Pressure Add

Discharge Elbows

Published or calculated values for elbow pressure losses according to SMACNA or ASHRAE are based on a uniform air velocity profile entering the elbow. Locate the elbow at least as far away from the fan discharge as the 100% equivalent length. If this is not possible, elbow losses will be greater than expected.

If the elbow is located closer than the 100% effective length, do not use turning vanes in the elbow. The turning vanes tend to continue the non-uniform velocity profile beyond the elbow.

Let's continue our example problem with an elbow "Position B" located at 25% equivalent length. What is the pressure loss of the elbow?

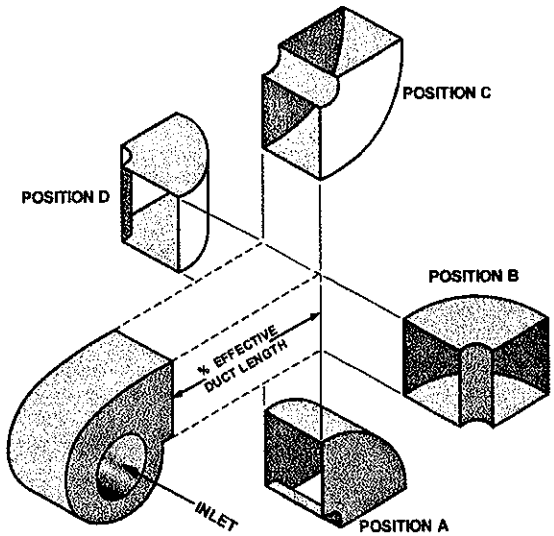

Figure 40

Discharge Elbows

System Effect-Discharge Elbow

The table provides the appropriate system effect curve to be used to determine the added pressure loss imposed by the location and bend of an elbow at the fan discharge.

For the example problem, we will use a "B" type elbow located at 25% effective length with a ratio of 0.6. This results in the use of curve "R" to establish added elbow losses.

System Effect Factor Curves for SWSI fans

Impact of elbows:

- Enter table at 0.6 blast area ratio
- Enter at 25% effective duct
- With elbow "B" find curve "R"
- Now go to system effect curves to find loss

Blast Area / Outlet Area	Outlet Elbow Position	No Outlet Duct	12% Effective Duct	25% Effective Duct	50% Effective Duct	100% Effective Duct
0.4	A B C D	N M L-M L-M	O M-N M M		S R Q Q	NO SYSTEM EFFECT FACTOR
0.5	A B C D	P N-O M-N M-N	Q O-P N-O N-O		T S R-S R-S	
0.6	A (B) C D	Q P N-O O	Q-R Q O-P P	R-S (R) P-Q Q-R	U T S S-T	
0.7	A B C D	S-T R-S Q-R R	T S R R-S	U T S S-T	W V U-V U-V	
0.8	A B C D	S R Q Q-R	S-T R-S Q-R R	T-U S-T R-S S	V-W U-V U U-V	
0.9	A B C D	S-T R-S R R-S	T S R-S S	U T S-T T	W V U-V V	
1.0	A B C D	R-S S-T R-S R-S	S T S S	T U T T	V W V V	

Multipliers For DWDI Fans
Elbow Position B = ΔP_S * 1.25
Elbow Position D = ΔP_S * 0.85
Elbow Positions A and C = ΔP_S * 1.00

Figure 41

System Effect Factors for Outlet Elbows

Elbow Loss

Knowing the curve ("R") from the previous page and the duct velocity of 2500 fpm, the added impact of the "Position B" elbow can be determined to be 0.42 in. wg.

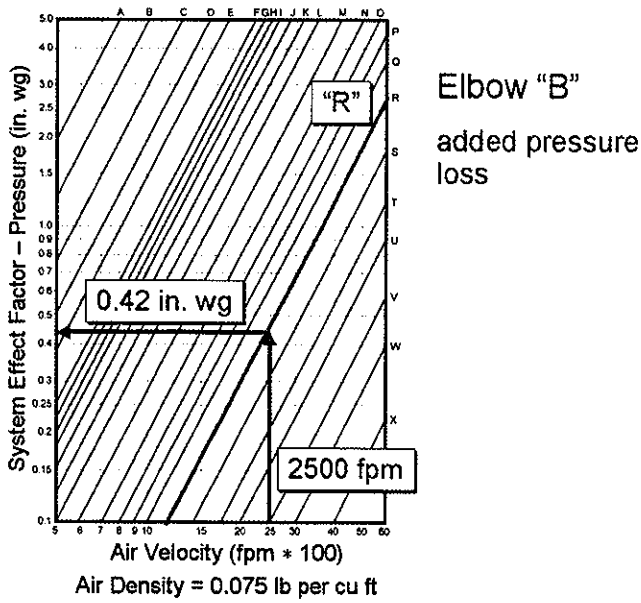

Figure 42

Elbow Loss

System Effect Conclusion

As we can see, the easiest way to reduce or eliminate system effect is to avoid discharge duct situations that would create non-uniform airflows, such as elbows too close to the discharge.

The same principle applies to inlet airflow arrangements. There are system effect charts that are available to be used to determine inlet system effect just like we did for the discharge. They are available from sources like AMCA.

Here is an example of non-uniform inlet flow created by ducting the return too close to the suction of a plenum fan.

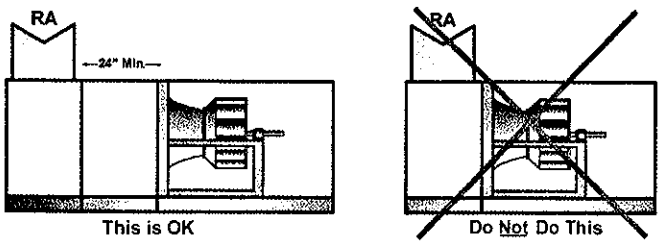

System effect caused by non-uniform airflow into the vortex of the plenum fan

Figure 43

System Effect Plenum Fan Inlet

Note

The easiest way to eliminate the possibility of any system effect is to ensure the airflow enters and exits the fan section uniformly.

The discussion of system effect in this TDP module has been limited to the effects of some of the more common arrangements influencing fan performance. For a more comprehensive treatment, reference should be made to SMACNA or AMCA.

Miscellaneous Fan Topics

Bearings

Fan manufacturers use several different types of bearings in their product line. That is because the bearings on a small gas furnace are subject to a different loading than those on a large central station air-handling unit. The important terms that one should understand apply to many bearing types. Fan manufacturers work with bearing suppliers to establish a level of quality and assure the bearing life expectance required by the HVAC industry.

Bearing Life

The life of a bearing is a function of the number of revolutions it experiences before developing evidence of fatigue in the moving elements. The terms that have been used in the industry are B_{10}, L_{10} and B_{50} or L_{50}. The terms B_{10} and L_{10} mean the same thing, as do B_{50} and L_{50}. The current terms to be used are L_{10} and L_{50}.

The American Bearing Manufacturer's Association (ABMA) defines L_{10} as the bearing life associated with a 90 percent reliability rate when operating under normal conditions. Normal operation means the bearing was kept clean, properly lubricated, operated at a reasonable temperature, and free of dust and debris with perfect alignment. In reality, this may not be the case, so the actual life of the bearing can be shortened based on the application conditions. However, following the manufacturer's installation and maintenance requirements will help extend the life to the manufacturer's specified values.

The designation L_{50} indicates the duration in hours that one half (50 percent) of the bearing can be expected to survive without showing evidence of failure. Conversely, it is the life at which one half of the bearings can be expected to fail. Thus a bearing with a longer L_{50} life rating for a given application can be expected to perform more reliably than another bearing with a shorter L_{50} life rating. L_{50} life equals five times the L_{10} life.

To get a L_{50} life equal to a L_{10} 100,000 life, you must specify the L_{50} life to be 500,000 hours.

Bearing life is useful when specifying a level of bearing construction. When required to provide a given life such as L_{10} all equipment manufacturers must supply the same capability bearing for the same given application. A 100,000 hour L_{10} bearing will have a life over twice as long as 40,000 hour L_{10} bearing and hence should last longer on a similar field application.

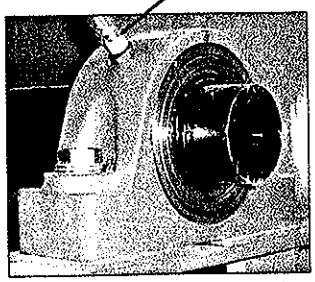

Typical Pillow Block Bearing

Hours and Years			
How long is 200,000 hours? The following table converts hours to years based on different daily usage.			
Hours	YEARS		
	8 hours per day	16 hours per day	Continuous duty
40,000	13.7	6.8	4.6
100,000	34.2	17.1	11.4
200,000	68.4	34.2	22.8
400,000	137	68.4	45.8
500,000	171	85.6	57.0
1,000,000	342	171	114

Figure 44

Bearing Life

Bearing Selection

Most manufacturers select their bearings as an integral part of the air-handling unit fan design. Some of the main selection criteria include shaft diameter and weight, motor horsepower range, weight and location on the shaft, maximum fan speed, fan wheel weight, and the direction of belt pull.

Ball bearings with stamped steel housings are well suited for applications with light loads, as in smaller equipment. The use of these bearings is limited to fan products with ¾ inch and smaller diameter shafts, and one horsepower and smaller motors, such as small fan units.

Air-handling units will tend to use ball, spherical, or tapered roller pillow block or flange-mount bearings. Once the application exceeds the speed limit for the contact seal and lubrication capabilities of the solid housing, a pillow block bearing is typically specified. The pillow block design incorporates a friction-free seal and a larger grease cavity. Higher speeds can then be attained and the rollers become the limiting factor instead of the seal.

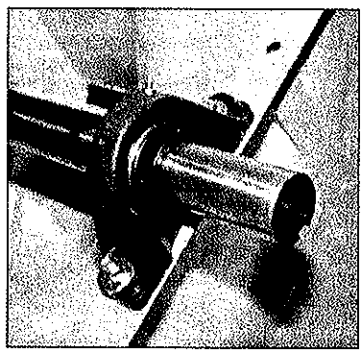

Figure 45

Bearing life is affected by several variables.

To enhance accessibility, it is often desirable to extend the bearing lubrication lines to the drive side of the fan. In some cases customers want the lubrication lines and fittings extended to the cabinet exterior so that bearing lubrication can be performed without stopping the unit. But, customers should also consider the downside of extended lube lines. Bearings should be inspected at the time of lubrication to look for improper operating conditions or signs of failure. If lube lines fail or vibrate loose, lubricating grease may never reach the bearing, creating an ideal condition for premature bearing failure. Also, bearings can be over-lubricated, in which case seals are dislodged, allowing the surplus lubricant to escape.

Motors

HVAC Fan motors typically have two types of enclosures: open drip proof (ODP), and totally enclosed fan cooled (TEFC). These two names refer to the method used to cool the motor windings and describe the type of motor enclosure and internal construction.

Electricity flowing through motor windings develops heat due to the resistance of the windings. This heat is developed continuously and there

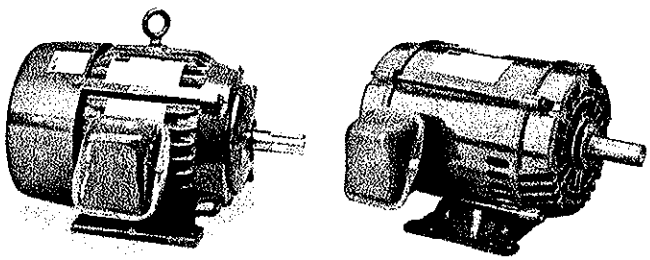

Figure 46

Common HVAC Motor Types

fore must be removed continuously or the temperature of the windings would rise until the winding insulation burns out. ODP and TEFC motors use different methods to remove heat from the windings.

ODP motors have an internally mounted fan pulling ambient air from intake vents in one end of the motor, through the windings, then out of the other end of the motor enclosure through exhaust vents. These vents are placed to prevent falling rain from directly entering the motor enclosure.

ODP motors are advantageous because of their low price, availability, and resistance to runaway heating. However, in ODP motors, air is moved directly through the windings, which leaves deposits on the windings from airborne contaminants such as dust, aerosols, and moisture. Also, splash and wind-driven rain, and even insects and vermin, can enter the motor.

TEFC motors have an externally mounted fan covered by a shroud blowing ambient air across the surface of the motor enclosure. Heat developed in the windings moves by conduction outward through the motor case then into the air moving along the surface of the motor case. The motor case is a heat sink drawing heat from the motor interior to the outside. TEFC motors may have fins on the motor case enhancing this heat transfer into the air.

TEFC motors are advantageous because air is not drawn into the motor for cooling and therefore the windings stay clean and dry. The windings are protected against direct entry of wind driven rain, directed spray, and splash from the ground. Also, insects and vermin cannot enter the motor. TEFC motors protect the single-phase switch keeping it clean and dry.

Some single-phase motors have a switch mechanism located next to the windings, which operates the start capacitors and windings. This switch is easily affected by dust, sand, dirt, and corrosion, and is the largest cause of problems on single-phase motors. ODP motors constantly pull contaminated air over this switch. TEFC motors keep the single-phase switch clean and dry, and therefore single-phase TEFC motors have fewer problems than single-phase ODP motors.

Convection through a motor enclosure (TEFC) is less efficient than directly cooling the windings with air (ODP). This makes TEFC motors more expensive to build.

Some of the construction differences that make TEFC motors more expensive are:

- The fan shroud and a higher-grade winding insulation are used to withstand higher temperatures.
- TEFC motor enclosures are often physically larger than ODP motors
- Finned motor enclosures cost more

It is important to note that TEFC motors should never be thought of as "sealed" or "wash down" duty motors, which they are not. TEFC motors are resistant to directed spray, but TEFC motors are definitely not intended to withstand directed sprays or washing. Air that is heavily laden with caustic or oxidizing vapors can enter a TEFC motor, but more slowly than an ODP motor.

Drives

Most fan drive systems are based on the standard "V" drive belt, which is most commonly used and is relatively efficient. The use of a belt drive allows fan rpm to be easily selected through a combination of motor rpm and drive pulley ratios. Multiple belts and multiple-groove sheaves are required to meet higher horsepower requirements. Drive ratio is defined as follows:

$$Drive\ Ratio = \frac{motor\ rpm}{desired\ fan\ rpm}$$

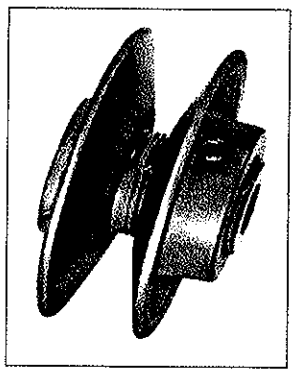

Figure 47

Variable Sheave

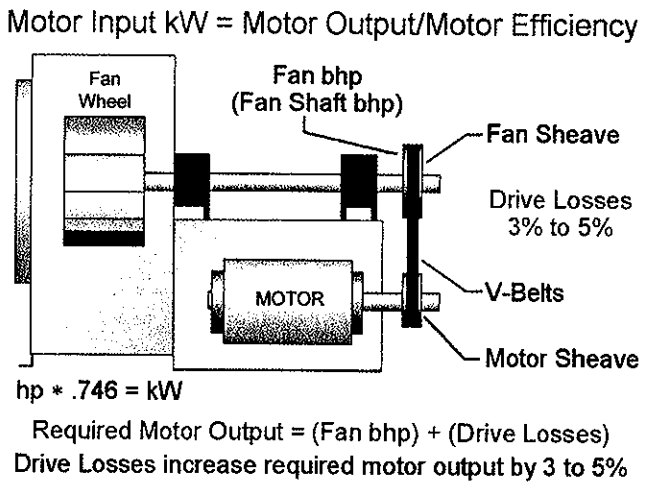

Figure 48

Motor and Drive Terminology

The fan drives are either fixed drive or adjustable drive. When a unit is furnished with an adjustable drive, the fan sheave diameter can be changed to fine tune the fan speed and performance.

Drive losses refer to the inefficiencies resulting from the frictional effects of pulley and belt assemblies between the motor and the fan wheel.

Higher belt speeds tend to have higher losses than lower belt speeds at the same horsepower.

Drive losses are based on the conventional V-belt, which has been the most commonly used drive in the industry for several decades.

For example, fan brake horsepower output is determined to be 17.1 bhp. What is the required motor output horsepower?

The belts are V-types, the drive loss is 5%.

Drive loss = 0.05 x 17.1 hp = 0.86 hp

Motor power output = 17.1 bhp + 0.86 bhp = 18 bhp

Spring Isolation

The presence of vibration is not desirable in any piece of mechanical equipment, and fans are no exception. Excessive fan vibration can cause premature failure of critical parts that may result in high maintenance cost and downtime. Consequently, it is common to find a "vibration clause" written into many specifications.

The causes of vibration may be vibration that is a result of an unbalanced fan wheel or vibration caused from drive misalignment, belt tension, bent fan shaft, etc.

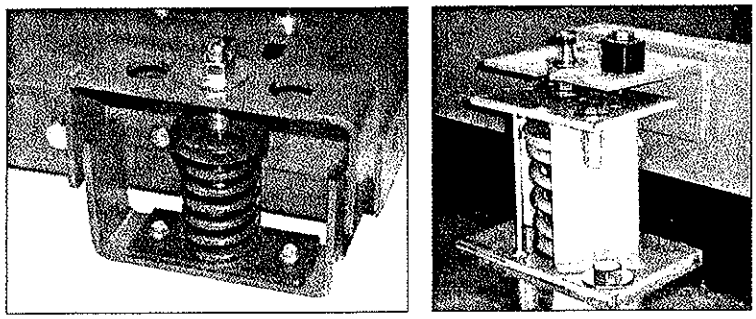

Standard 2-inch Steel Spring Isolator

2-inch Seismic Rated Isolator

Figure 49

Fan Spring Isolation

To alleviate problems caused by vibration, manufacturers may supply internal spring isolation as part of the fan assembly. Most fan assemblies are dynamically balanced before they are installed in the fan cabinet. This ensures that the assembly does not suffer from rotating part unbalance.

Summary

The objective of this module has been to familiarize the designer with fans and how they represent a very important segment of the typical air conditioning system. A clear understanding of how they operate is an essential part of being able to design a good system.

System effect exists on most projects as a result of the fan being installed somewhat differently than laboratory test conditions. Since we cannot always prevent these differing conditions, we must account for their system effect.

An examination of the types of fans available and their performance prepares a system designer to evaluate fan system performance. While it is important that system designers understand the intricacies of fans and fan selection, there is software available to aid in the determination of what fan should be used in a specific application. It is also important to understand motors, drives, and bearings, which are an important component of any fan selection and HVAC system.

Work Session

1. What type of fan would be considered as an overloading type and why?

2. What are the two major types of fans used in the HVAC industry today?

   _____, _____

3. What are the construction differences between a forward-curved and airfoil type fan wheel?

4. How long should the straight length of supply duct be prior to installing an elbow?

   _____

5. What is system effect and how does it effect fan operation? Can it be prevented?

6. Explain the difference between the L_{10} and L_{50} designations for fan bearings?

7. State the three fan laws.

8. Explain how a plenum fan works.

9. Name two reasons a system curve might change over time.

10. What is the difference between a tube axial fan and a vane axial fan? Which is more efficient?

Notes:

Notes:

Notes:

Appendix

Fan Law Equations

Fan Laws for Constant Mass Flow – Capacity, speed and pressure vary inversely as the air density, that is, inversely as the barometric pressure and directly as the absolute temperature.

a. $$cfm_2 = cfm_1 * \left[\frac{DENSITY_{STD}}{DENSITY_{ACT}}\right] \text{ or } cfm_1 * \left[\frac{T_{ACT}}{T_{STD}}\right]$$

b. $$rpm_2 = rpm_1 * \left[\frac{DENSITY_{STD}}{DENSITY_{ACT}}\right] \text{ or } rpm_1 * \left[\frac{T_{ACT}}{T_{STD}}\right]$$

c. $$P_{S_2} = P_{S_1} * \left[\frac{DENSITY_{STD}}{DENSITY_{ACT}}\right] \text{ or } P_{S_1} * \left[\frac{T_{ACT}}{T_{STD}}\right]$$

d. $$bhp_2 = bhp_1 * \left[\frac{DENSITY_{STD}}{DENSITY_{ACT}}\right] \text{ or } bhp_1 * \left[\frac{T_{ACT}}{T_{STD}}\right]$$

Fan Laws for Constant Volume (cfm) and Fan Speed – Horsepower and pressure vary directly with the air density, that is directly as the barometric pressure, and inversely as the absolute temperature.

a. $$bhp_2 = bhp_1 * \left[\frac{DENSITY_{ACT}}{DENSITY_{STD}}\right] \text{ or } bhp_1 * \left[\frac{T_{STD}}{T_{ACT}}\right]$$

b. $$P_{S_2} = P_{S_1} * \left[\frac{DENSITY_{ACT}}{DENSITY_{STD}}\right] \text{ or } P_{S_1} * \left[\frac{T_{STD}}{T_{ACT}}\right]$$

Fan Laws for Constant Static Pressure – Speed, volume flow (cfm) and horsepower vary inversely as the square root of the density, that is, inversely as the square root of the barometric pressure and directly as the square root of the absolute temperature.

a. $$rpm_2 = rpm_1 * \sqrt{\frac{DENSITY_{STD}}{DENSITY_{ACT}}} \text{ or } rpm_1 * \sqrt{\frac{T_{ACT}}{T_{STD}}}$$

b. $$cfm_2 = cfm_1 * \sqrt{\frac{DENSITY_{STD}}{DENSITY_{ACT}}} \text{ or } cfm_1 * \sqrt{\frac{T_{ACT}}{T_{STD}}}$$

c. $$bhp_2 = bhp_1 * \sqrt{\frac{DENSITY_{STD}}{DENSITY_{ACT}}} \text{ or } bhp_1 * \sqrt{\frac{T_{ACT}}{T_{STD}}}$$

Centrifugal Fans: Impeller Comparisons

TYPE	CHARACTERISTICS	APPLICATION
Forward-Curved (FC) 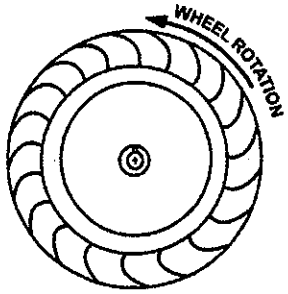	1. Best efficiency at low or medium pressure (approximately 0 - 5 in. wg). 2. Horsepower increases continuously with increase in air quality (overloads) as static pressure decreases. 3. Less expensive than BI, or AF fans. 4. Runs at relatively low speed, typically 800 - 1200 rpm. 5. Blades curve toward direction of rotation.	For low- to medium-pressure air-handling applications.
Radial (RA) 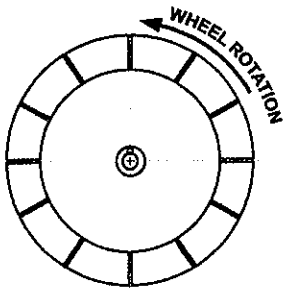	1. Self-cleaning blades; dirt and dust do not deposit. 2. Horsepower increases with increase in air quantity (overloads) while static pressure decreases. 3. Operates at high speed and pressure, typically 2000-3000 rpm. 4. Blades radiate from center along radius of fan.	Dust or particle movement in areas such as woodworking shops. Ventilation or dusty environment.
Backward-Inclined (BI) 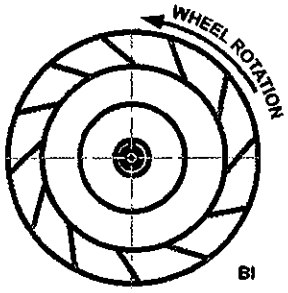	1. Best efficiency at medium pressure. 2. Horsepower increases with increase in air quantity but peaks at a higher cfm capacity (non-overloading). 3. More expensive than FC fan. 4. Runs at high speeds, typically 1200-2400 rpm, about double that of FC fan for similar air quantity. 5. Blades curve away or incline from direction of rotation.	For medium-pressure air-handling applications.
Airfoil (AF) 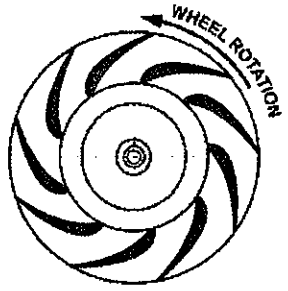	1. Best efficiency in high capacity and high-pressure applications (4-10 in. wg). 2. Horsepower peaks at high capacities. 3. Most expensive of centrifugal fans. 4. Operates at high speeds, typically 1500-3000 rpm. About double the speed of FC fan for similar air quantity. 5. Blades have aerodynamic shape similar to airplane wing and are backwardly curved.	For medium to high air capacity and pressure applications.

Axial Fans: Impeller Comparisons

TYPE	CHARACTERISTICS	APPLICATION
Propeller (Prop) 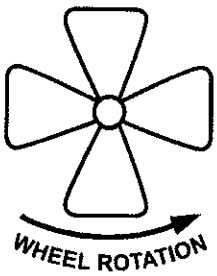 	1. High efficiency at free delivery (0 to ½ - in. wg). 2. Air delivery decreases with increase in air resistance. 3. Inexpensive. 4. Operates at relatively low speeds, typically 900-1800 rpm. 5. Blade rotation is perpendicular to direction of airflow.	Used on no-duct systems or low resistance systems.
Tube Axial Fan 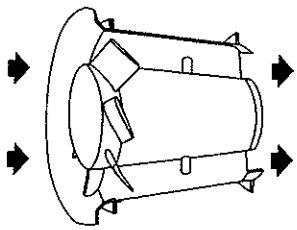	1. More efficient than propeller at high air volume. 2. Similar to propeller fan but blades may have aerodynamic configuration. 3. May require sound attenuation. 4. Operates at high speeds, typically 2000-3000 rpm. 5. Axial fans may be constructed to be overloading type or non-overloading. Non-overloading type is more common.	In-line or duct mounting for high air volume applications. May require sound attenuators to reduce noise levels.
Vane Axial Fan 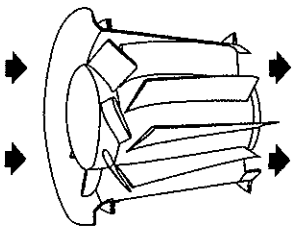	1. Similar to tube axial fan but has guide vanes on discharge side to improve efficiency. Vanes aid in redirecting air-leaving blades. 2. More costly than tube axial fan.	Same application as tube axial fan but with improved efficiency.

Work Session Answers

1. A forward-curved fan because the airflow through the fan increases at a constant rpm.

2. centrifugal, and axial

3. A forward-curved fan wheel is fabricated of lightweight and low cost materials, and has 24-64 shallow blades with both the heel and the tip of the blade curved forward. The airfoil blades are more ruggedly built, adding to their weight, and are curved backward with 8-18 blades.

4. 2.5 equivalent duct diameters.

5. System effect refers to the conditions in an actual duct system that affect fan performance and related testing, adjusting, and balancing work. It can be prevented to a degree, but must be accounted for.

6. L_{10} rated bearings have a 90% reliability of their stated amount of time, generally expressed in hours. That is, 90% of the bearings with L_{10} ratings will not have developed metal fatigue after their designated life span. L_{50} rated bearings have an 50% reliability of their stated amount of time; only 50% of a group of identical bearings with an L_{50} rating will not yet have developed metal fatigue.

7. cfm varies directly with fan rpm

   static pressure varies with the square of the fan rpm

   brake horsepower varies with the cube of the fan rpm

8. A plenum fan builds up static pressure in the plenum. It does not propel the air down a single duct opening. The contractor cuts discharge openings in the plenum and the air exits under the static pressure developed by the fan.

9. The filters load up (collect dirt) increasing pressure drop, which changes the resistance of the total system. Someone may change the position of a balancing damper, which changes the system curve.

10. A vane axial fan incorporates a straightening vane assembly. This helps to make it more efficient than the tube axial fan.

Prerequisites:

Form No.	Book Cat. No.	Instructor Presentation Cat. No.	Title
TDP-102	796-026	797-026	ABCs of Comfort
TDP-103	796-027	797-027	Concepts of Air Conditioning

Learning Objectives:

After reading this module, participants will be able to:

- Identify fans types that are used in the HVAC industry, their operating characteristics, and basic construction.
- Understand the application limitations for types of fan impellers.
- Utilize the fan laws to construct a system curve for a typical system.
- Identify stable fan selections using fan curves.
- Calculate the system effect for an example fan operating condition.
- Understand fan bearing life, fan drives, and fan isolation techniques.

Supplemental Material:

Form No.	Book Cat. No.	Instructor Presentation Cat. No.	Title
TDP-623	796-055	797-055	Water-Cooled Chillers
TDP-705	796-070	797-070	Chilled-Water Systems
TDP-504	796-045	797-045	Duct Design, Level 1: Fundamentals

Instructor Information

Each TDP topic is supported with a number of different items to meet the specific needs of the user. Instructor materials consist of a CD-ROM disk that includes a PowerPoint™ presentation with convenient links to all required support materials required for the topic. This always includes: slides, presenter notes, text file including work sessions and work session solutions, quiz and quiz answers. Depending upon the topic, the instructor CD may also include sound, video, spreadsheets, forms, or other material required to present a complete class. Self-study or student material consists of a text including work sessions and work session answers, and may also include forms, worksheets, calculators, etc.



Turn to the Experts.℠

Carrier Corporation
Technical Training
800 644-5544
www.training.carrier.com

Form No. TDP-612
Supersedes T200-39

Cat. No. 796-050
Supersedes 791-039