KRUGER PRESENTATION

KRÜGER

amca INTERNATIONAL MEMBER

Fan Selection

KRUGER ENGINEERING PTE LTD

http://www.krugerfan.com

Basic Fan Type

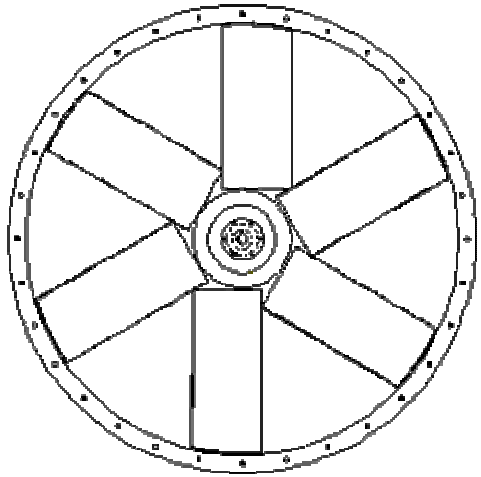

Axial

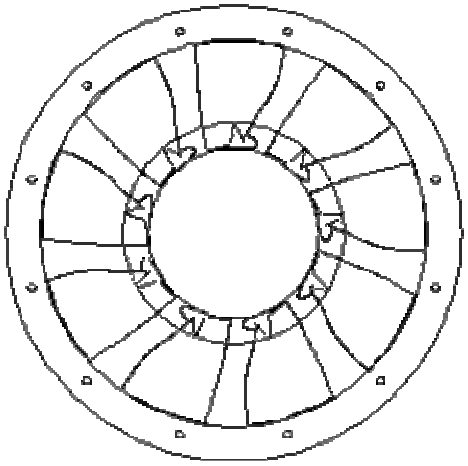

Mixed Flow

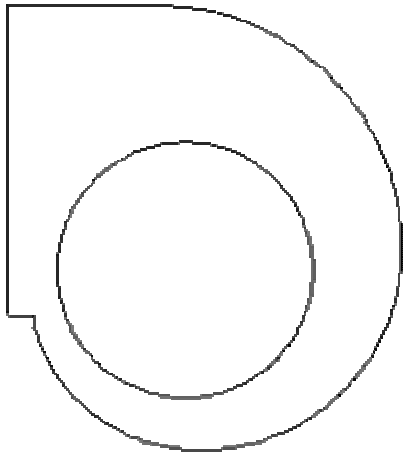

Centrifugal

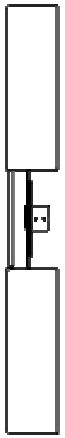

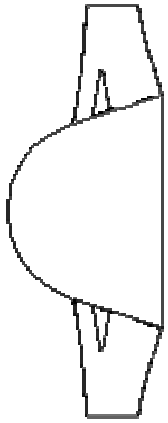

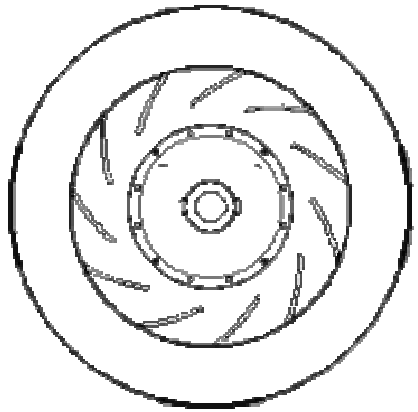

Fan Operation

Unstable Operation in Fan & System

Fan Surge

(Backward Curve Fan)

Operating Range
40~85%

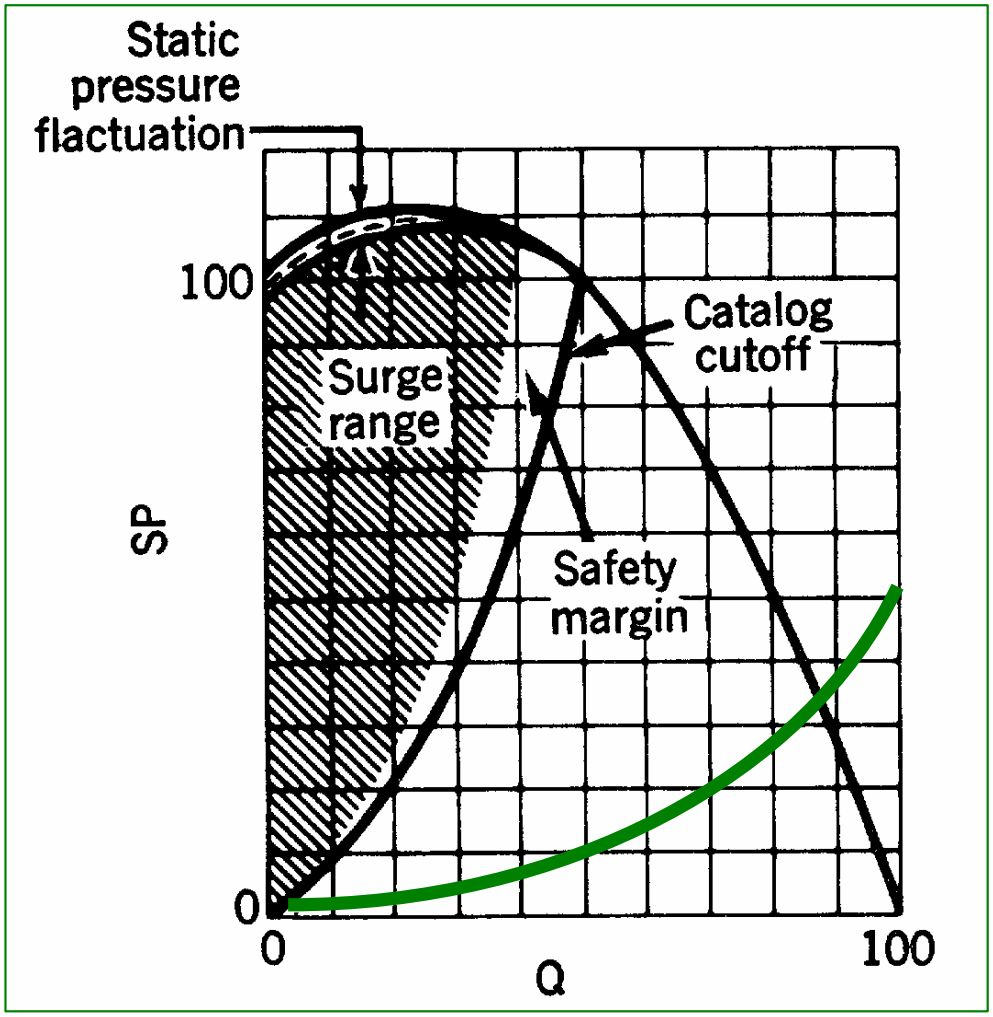

Unstable Operation in Fan & System

System Surge
(forward curve Fan)

Operating Range
35~80%

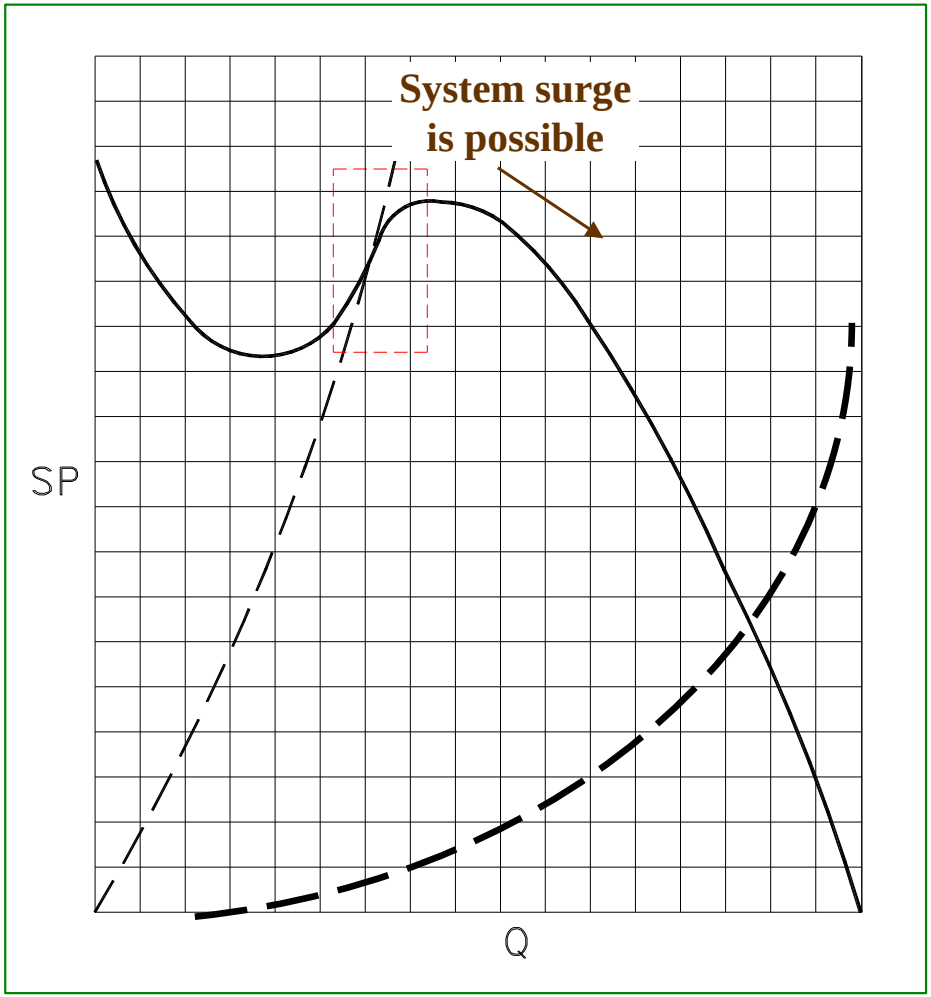

Unstable Operation in Fan & System

Stalling

(Axial or Mixed Flow Fan)

Operating Range
65~90%

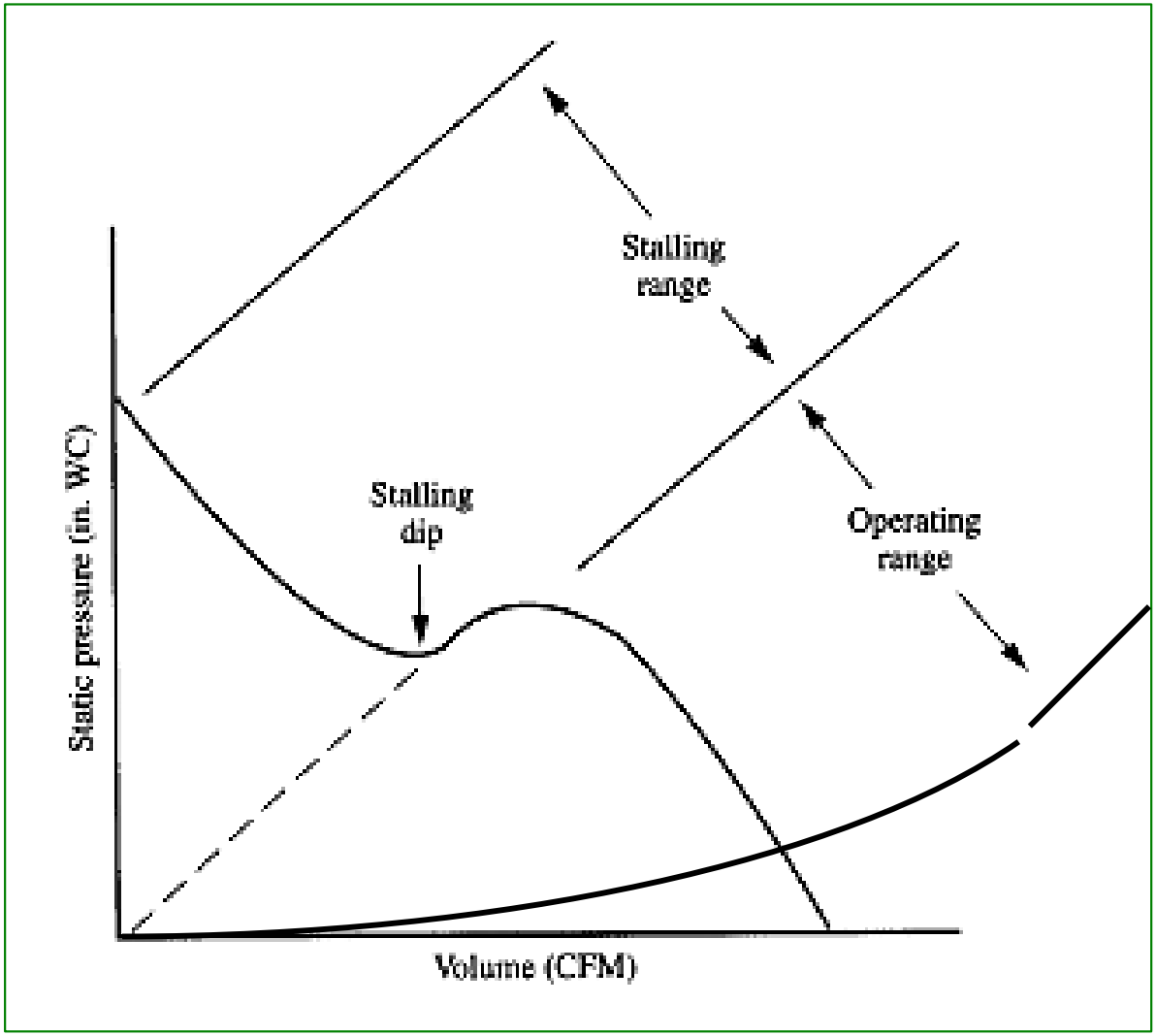

Skin Friction Drag

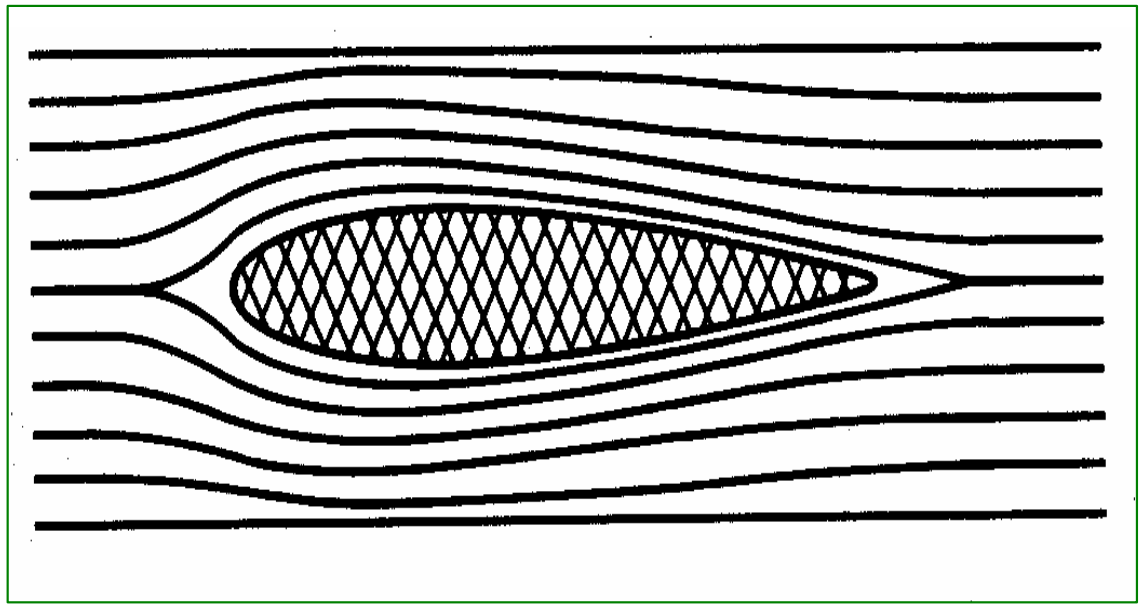

Profile Drag

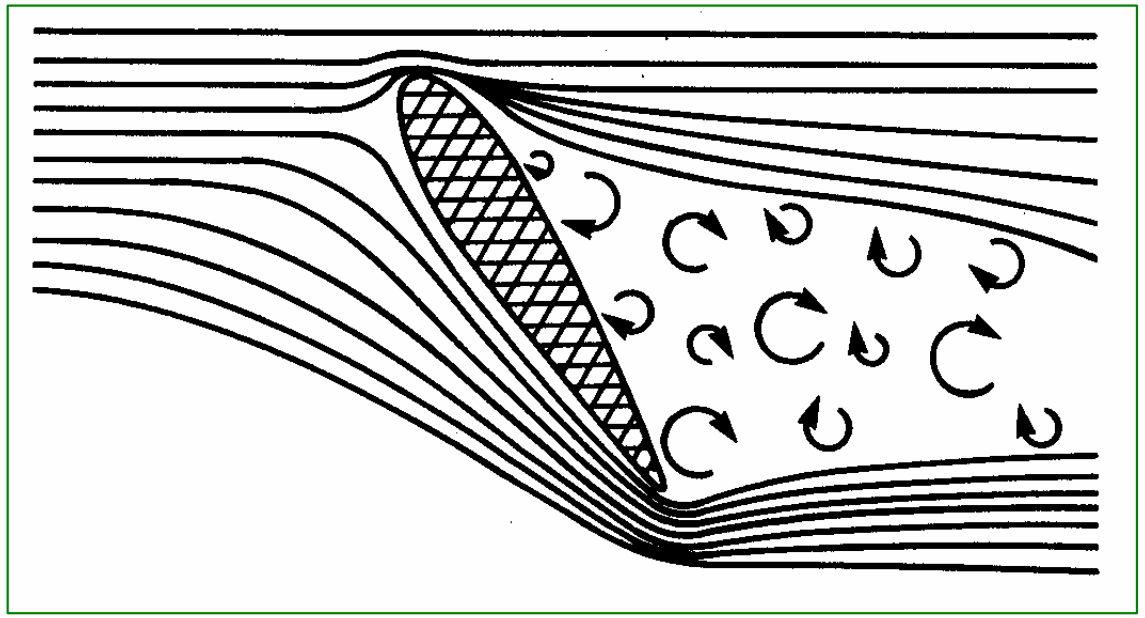

Fan Type Selection

Specific Speed

Specific Speed, n_s is used to reflect the characteristic of fans, or blowers. It differentiates the fan. types and relates the major performance parameters of a fan such as airflow q_v, total pressure p_{tf} and fan speed.

Specific speed is primarily used in three areas:

1. To determine fan type
2. For fan Classification
3. To perform design on geometrically similar blowers or fans.

Fan Type Selection

$$n_s = 5.54n\frac{Q^{0.5}}{(P_t)^{0.75}}$$

n = Fan speed (rpm)

Q = Airflow rate (m³/s)

Pt = Total pressure (Pa)

- Specific speed of fan refers to single fan operating individually.
- Evaluated at the point of maximum efficiency.

- When the design parameters are defined, the specific speed can be calculated. From the magnitude of the specific speed, the type of blower to be used can be determined.

Specific Speed	Fan Type
n_s < 10	Radial Blade
n_s = 15 ~ 65	Forward Curve
n_s = 20 ~ 90	Backward Inclined
n_s = 40 ~ 95	Mixed-Flow
n_s = 50 ~ 150	Vane axial
n_s = 70 ~ 250	Tube axial
n_s = 100 ~ 400	Propeller

Fan Type Selection

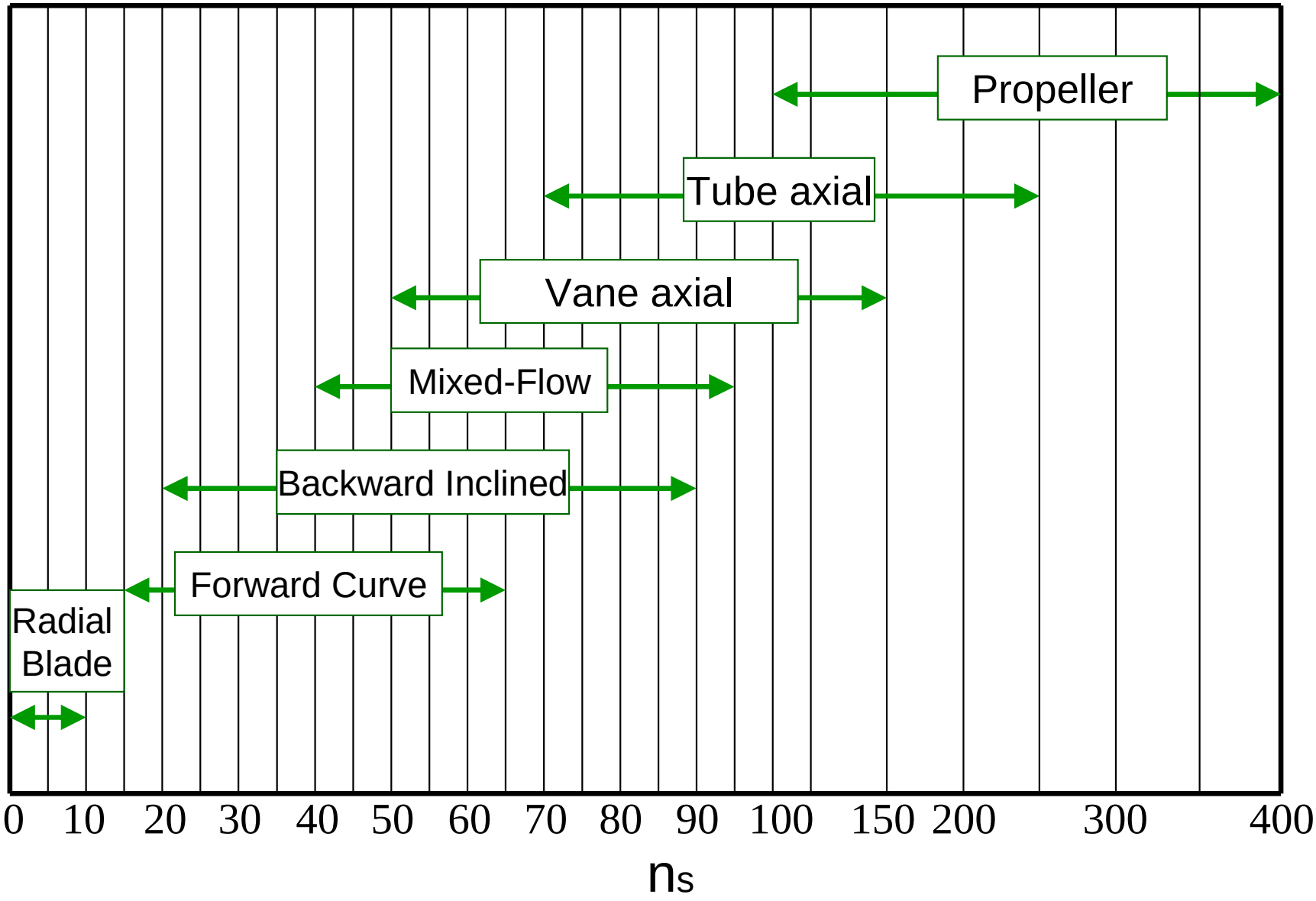

Fan Type Selection

Example：

A fan, under normal operating conditions, delivers 1.2m³/s At a total pressure of 700Pa when running at a speed n=1040rpm. Select the type of fan suitable for this . application.

$$n_s = 5.54n\frac{Q^{0.5}}{(P_t)^{0.75}}$$

$$= 5.54\times 1040\times\frac{(1.2)^{0.5}}{(700)^{0.75}}$$

$$= 46$$

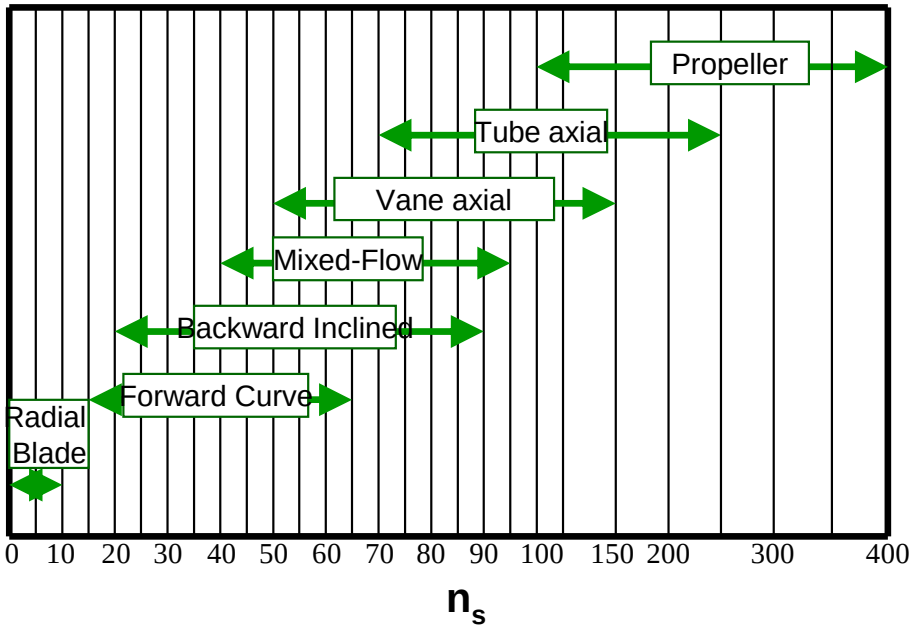

Hence, the required fan can be forward curve, backward inclined or mixed flow fan.

Kruger Program



AXIAL FAN RANGE

- *AXIAL FLOW FAN - direct driven*



TDA-L, TDA-M



TDA-V



TDA-F



TDB



TDS



RDA

- *AXIAL FLOW FAN - belt driven*



TBE

Axial Fan Selection

Example 1: single speed operation

Project - Ubi Ave 1, plot 1, 2 & 3

SCHEDULE OF TECHNICAL REQUIREMENTS FOR VENTILATION FANS					
FAN DESIGNATION	AREA SERVED	TYPE OF FAN	AIR QTY. (CMH)	APPROX. STATIC PRESSURE (Pa)	EST. MOTOR RATING (kW)
F(SP)/7-2	STAIRCASE S6	AXIAL	3100	115	0.37

Example 1: single speed operation

n = 1450 rpm

Q = 3100 CMH = 3100 / 3600 = 0.86 m³/s

Pt = 115 + 28 = 143 Pa

$$n_s = 5.54\, n \frac{Q^{0.5}}{(Pt)^{0.75}}$$

$$= 5.54 \times 1450 \times \frac{(0.86)^{0.5}}{(143)^{0.75}}$$

$$= 180.15$$

Specific Speed	Fan Type
ns < 10	Radial Blade
ns = 15 ~ 65	Forward Curve
ns = 20 ~ 90	Backward Inclined
ns = 40 ~ 95	Mixed-Flow
ns = 50 ~ 150	Vane axial
ns = 70 ~ 250	Tube axial
ns = 100 ~ 400	Propeller

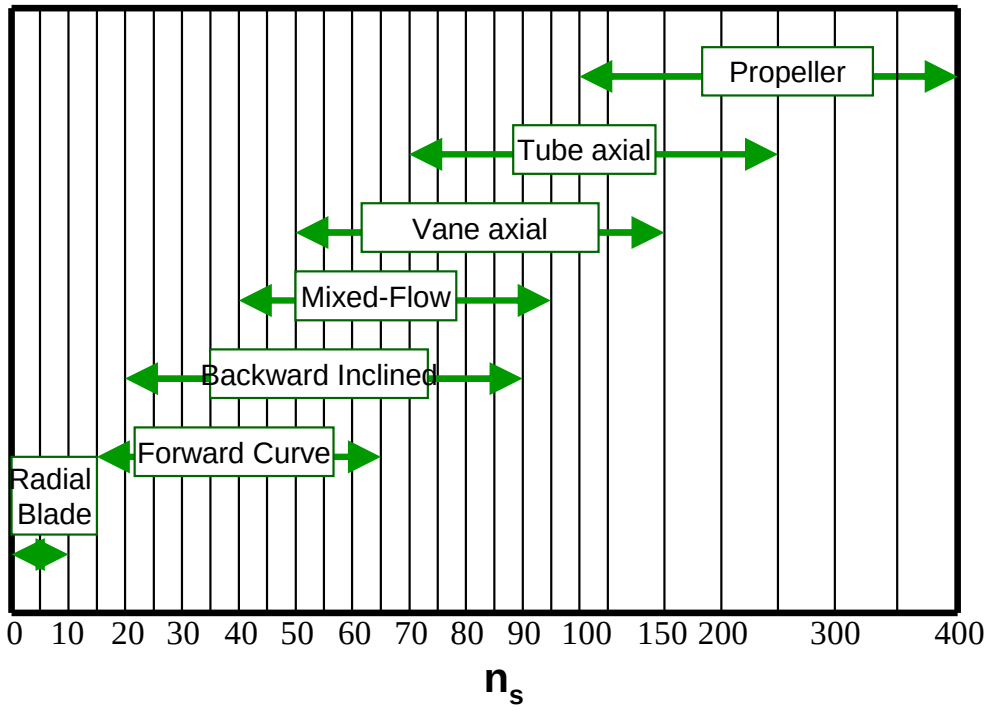

Hence, the required fan can be tube axial or propeller fan.

Axial Fan Selection

Example 1: single speed operation

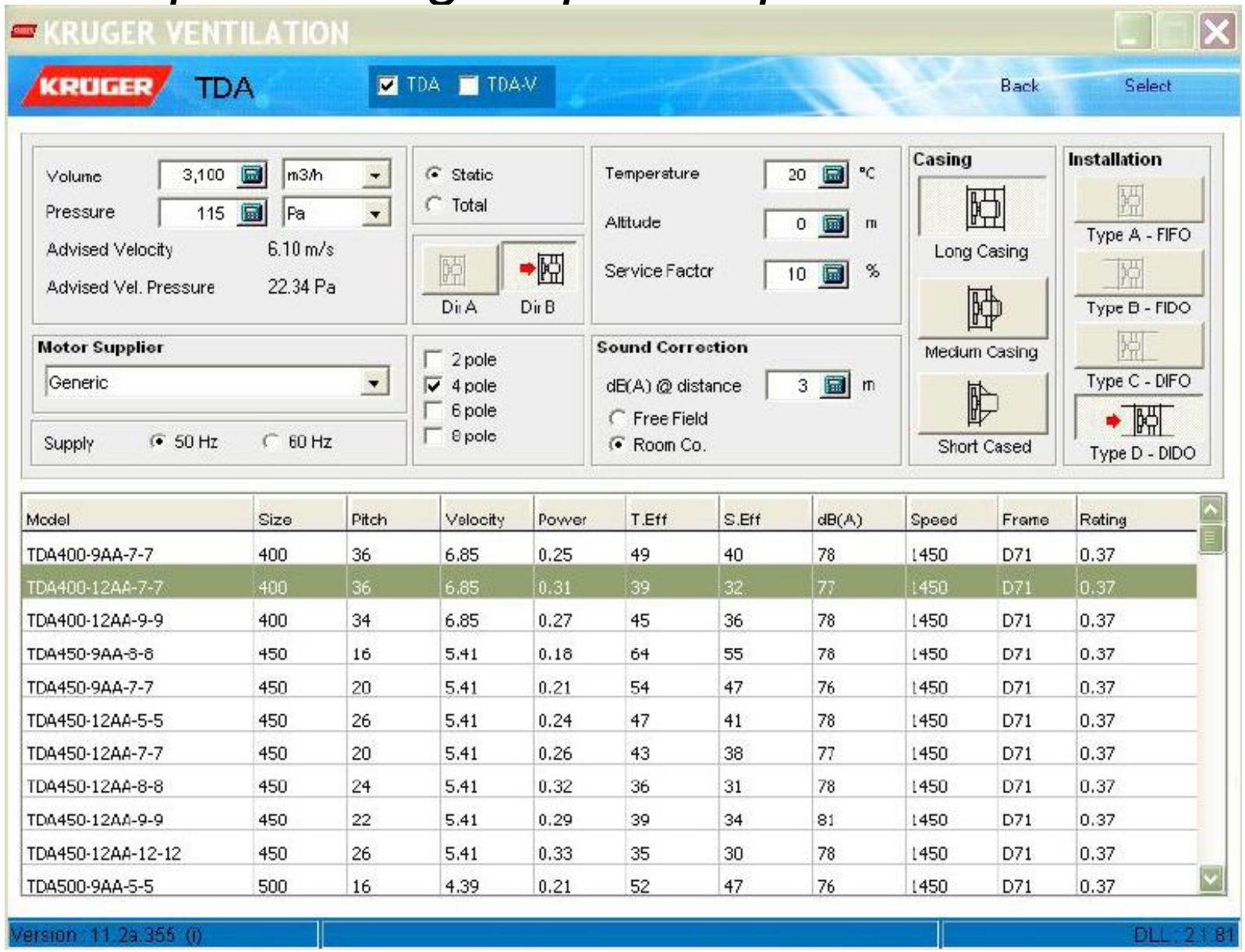

Axial Fan Selection

Example 1: single speed operation

KRUGER VENTILATION

KRUGER | Back | Sound | Specification | Drawing | Output

Fan Type	Axial Fan
Unit	TDA400-12AA-7-7 / 36°
Operating Conditions	Long Cased / Dir B / Type D
Air Volume	3100 m3/h
Static Pressure	115 Pa
Velocity Pressure	28 Pa
Total Pressure	143 Pa
Outlet Velocity	6.85 m/s
Fan Total Efficiency	39%
Fan Static Efficiency	32%
Fan Speed	1450 rpm
Air Temperature	20 °C
Altitude	0 m
Fan Absorbed Power	0.31 kW
Motor Power	D71 (0.37 kW)
Motor Speed	1450 rpm
Service Factor	-
Fan Pulley / Bush / Shaft	-
Motor Pulley / Bush / Shaft	-
Belt Length / Speed (<40m/s)	-
No. of Belts / f	-
Static Belt Tension	-
Belt Deflection	-
Bearing Life (L10 / L50)	-
Starting Torque	-
Max. Absorbed Power	-
Max. Fan Speed	-
Temperature (Min-Max)	-

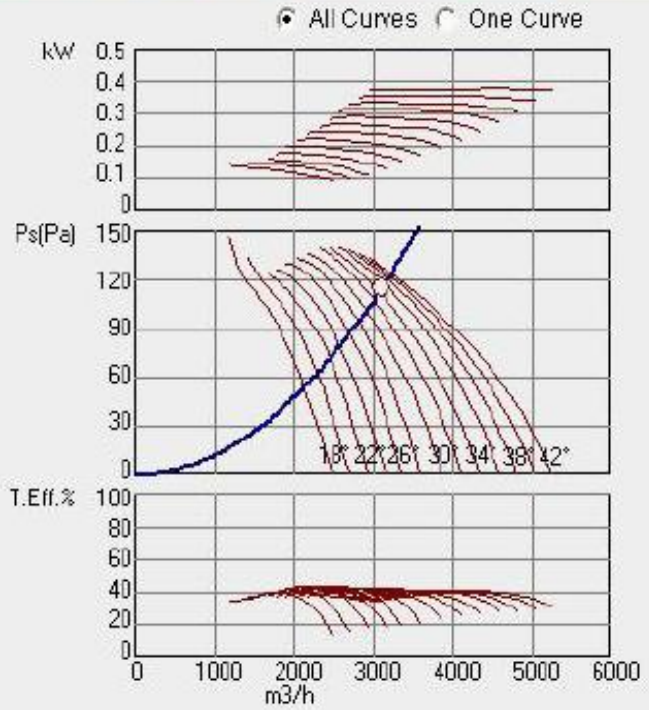

Hz	63	125	250	500	1k	2k	4k	8k	Overall	
Lw (Lin)	72	79	75	74	72	69	66	63	82	dB
Lw (A)	46	63	66	71	72	70	67	62	77	dB(A)
Lp (A)	30	47	50	54	54	53	50	45	60	dB(A)

* Sound pressure level @ distance 3m, Room Co.

Version : 11.2a.355 (i) DLL : 2.1.81

Axial Fan Selection

Example 2: two speed operation

Project - Ubi Ave 1, plot 1, 2 & 3

SCHEDULE OF TECHNICAL REQUIREMENTS FOR VENTILATION FANS					
FAN DESIGNATION	AREA SERVED	TYPE OF FAN	AIR QTY. (CMH)	APPROX. STATIC PRESSURE (Pa)	EST. MOTOR RATING (kW)
F(E)/B-3A	CARPARK (NORMAL MODE: 32500 CMH @ 180 Pa. FIRE MODE: 65000 CMH @ 720 Pa.)	AXIAL	65000	720	30

Example 2: two speed operation

High speed

n = 1450 rpm

Q = 65000 CMH = 65000 / 3600 = 18.06 m³/s

Pt = 720 + 130 = 850 Pa

$$n_s = 5.54\, n \frac{Q^{0.5}}{(Pt)^{0.75}}$$

$$= 5.54 \times 1450 \times \frac{(18.06)^{0.5}}{(850)^{0.75}}$$

$$= 216.86$$

Specific Speed	Fan Type
ns < 10	Radial Blade
ns = 15 ~ 65	Forward Curve
ns = 20 ~ 90	Backward Inclined
ns = 40 ~ 95	Mixed-Flow
ns = 50 ~ 150	Vane axial
ns = 70 ~ 250	Tube axial
ns = 100 ~ 400	Propeller

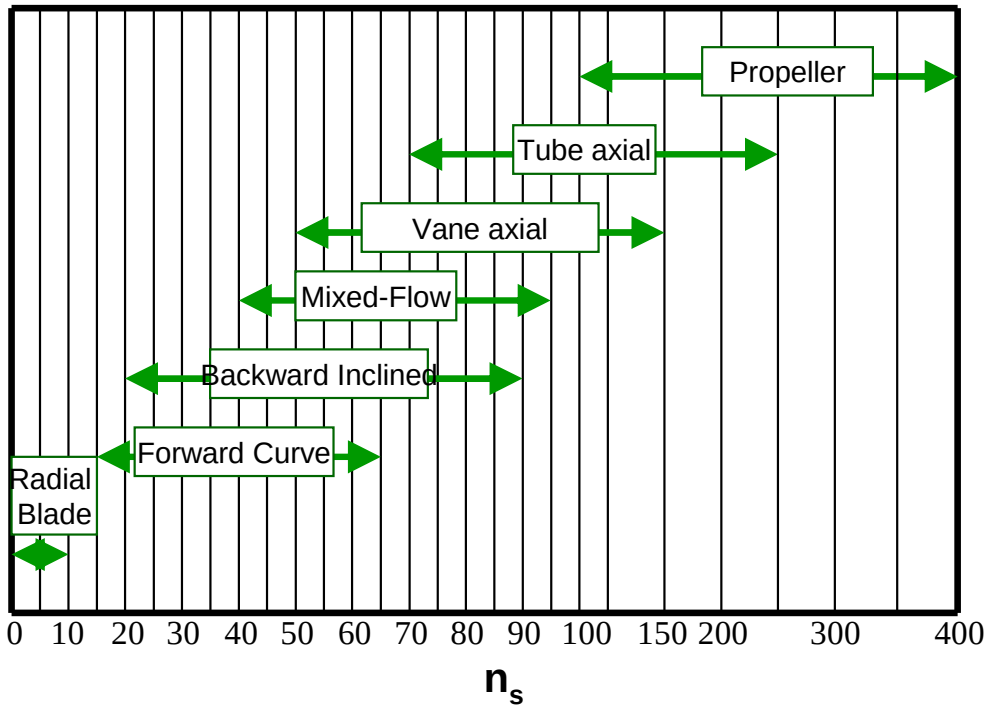

Hence, the required fan can be tube axial or propeller fan.

Example 2: two speed operation

Low speed

n = 725 rpm

Q = 32500 CMH = 32500 / 3600 = 9.03 m³/s

Pt = 180 + 32 = 212 Pa

$$n_s = 5.54\, n \frac{Q^{0.5}}{(Pt)^{0.75}}$$

$$= 5.54 \times 725 \times \frac{(9.03)^{0.5}}{(212)^{0.75}}$$

$$= 217.24$$

Specific Speed	Fan Type
ns < 10	Radial Blade
ns = 15 ~ 65	Forward Curve
ns = 20 ~ 90	Backward Inclined
ns = 40 ~ 95	Mixed-Flow
ns = 50 ~ 150	Vane axial
ns = 70 ~ 250	Tube axial
ns = 100 ~ 400	Propeller

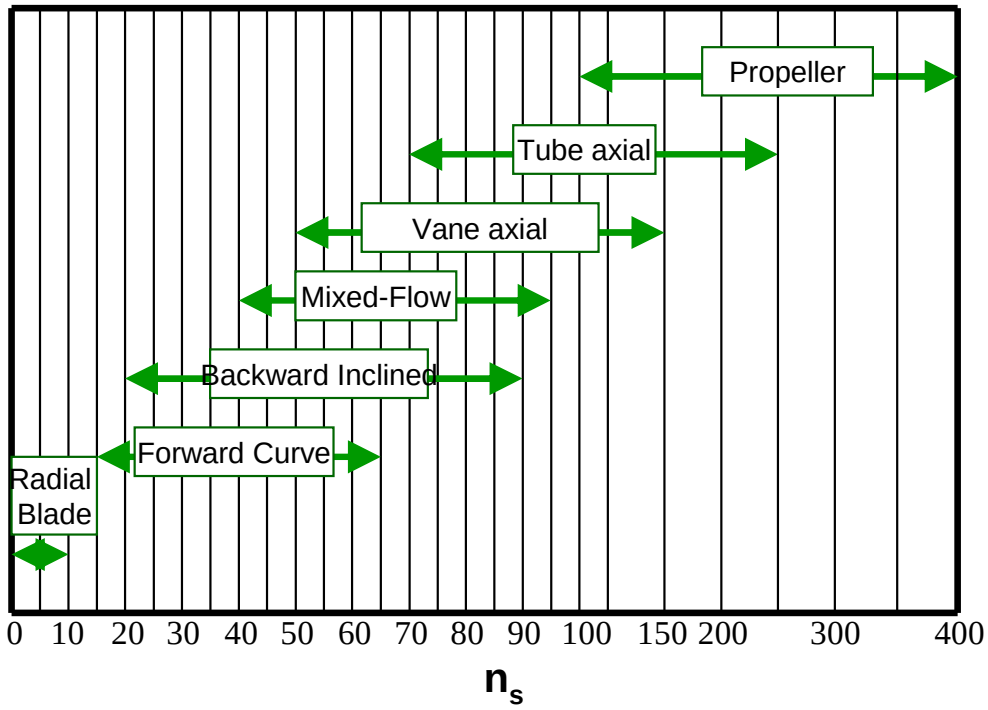

Hence, the required fan can be tube axial or propeller fan.

Axial Fan Selection

Example 2: two speed operation

High speed

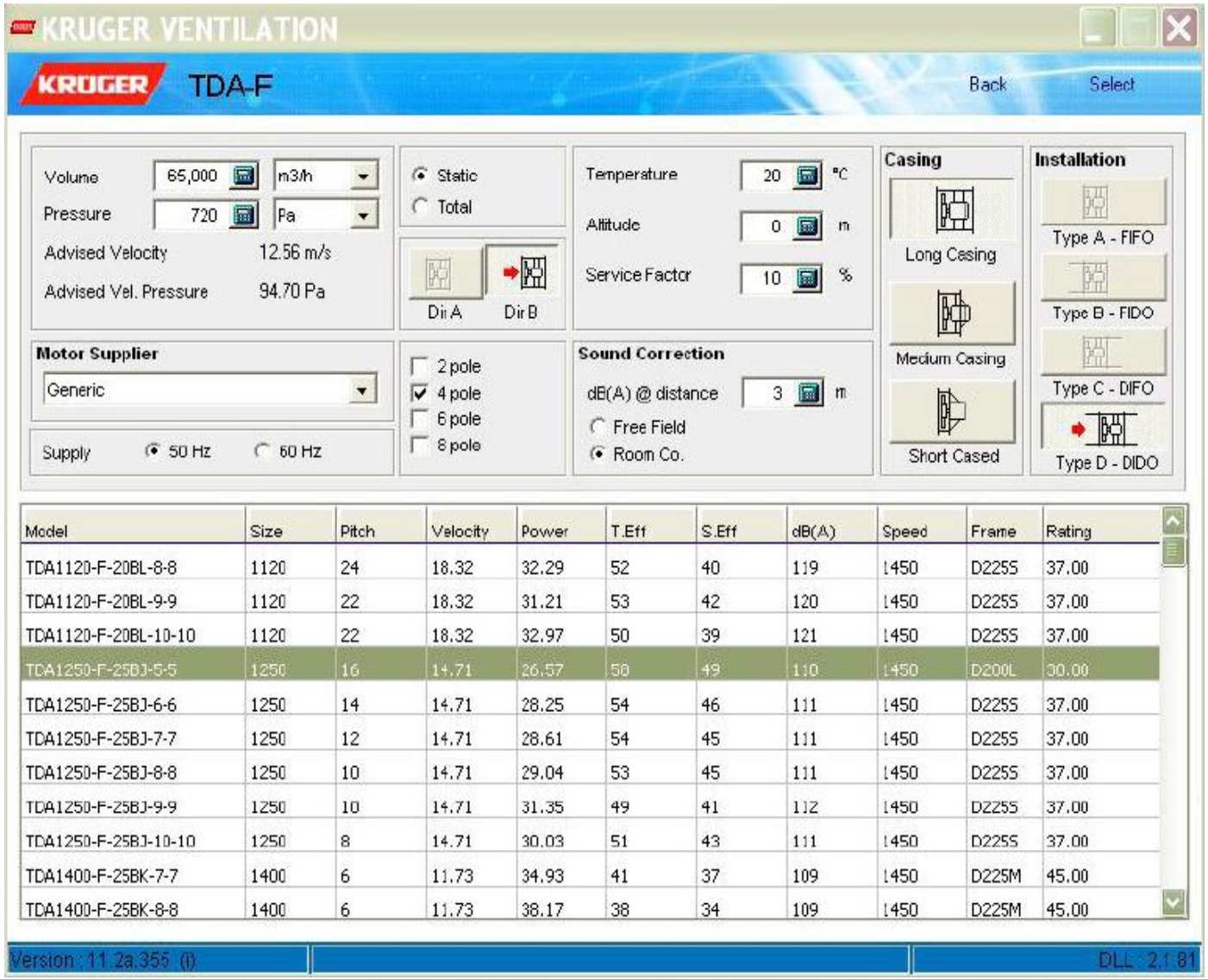

Axial Fan Selection

Example 2: two speed operation

High speed

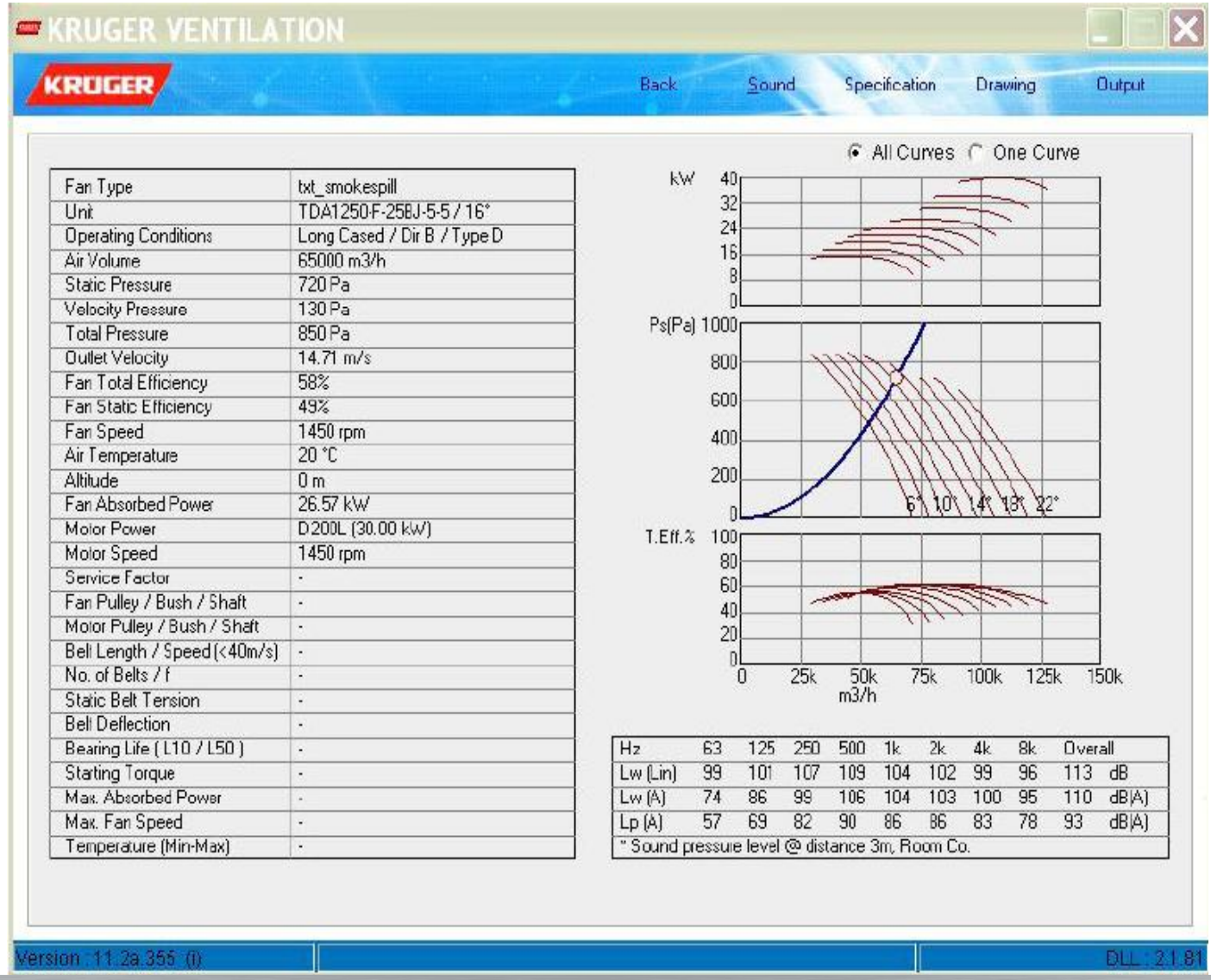

Fan Type	txt_smokespill
Unit	TDA1250-F-258J-5-5 / 16°
Operating Conditions	Long Cased / Dir B / Type D
Air Volume	65000 m3/h
Static Pressure	720 Pa
Velocity Pressure	130 Pa
Total Pressure	850 Pa
Outlet Velocity	14.71 m/s
Fan Total Efficiency	58%
Fan Static Efficiency	49%
Fan Speed	1450 rpm
Air Temperature	20 °C
Altitude	0 m
Fan Absorbed Power	26.57 kW
Motor Power	D200L (30.00 kW)
Motor Speed	1450 rpm
Service Factor	-
Fan Pulley / Bush / Shaft	-
Motor Pulley / Bush / Shaft	-
Belt Length / Speed (<40m/s)	-
No. of Belts / f	-
Static Belt Tension	-
Belt Deflection	-
Bearing Life (L10 / L50)	-
Starting Torque	-
Max. Absorbed Power	-
Max. Fan Speed	-
Temperature (Min-Max)	-

Hz	63	125	250	500	1k	2k	4k	8k	Overall	
Lw (Lin)	99	101	107	109	104	102	99	96	113	dB
Lw (A)	74	86	99	106	104	103	100	95	110	dB(A)
Lp (A)	57	69	82	90	86	86	83	78	93	dB(A)

" Sound pressure level @ distance 3m, Room Co.

Axial Fan Selection

Example 2: two speed operation

Low speed

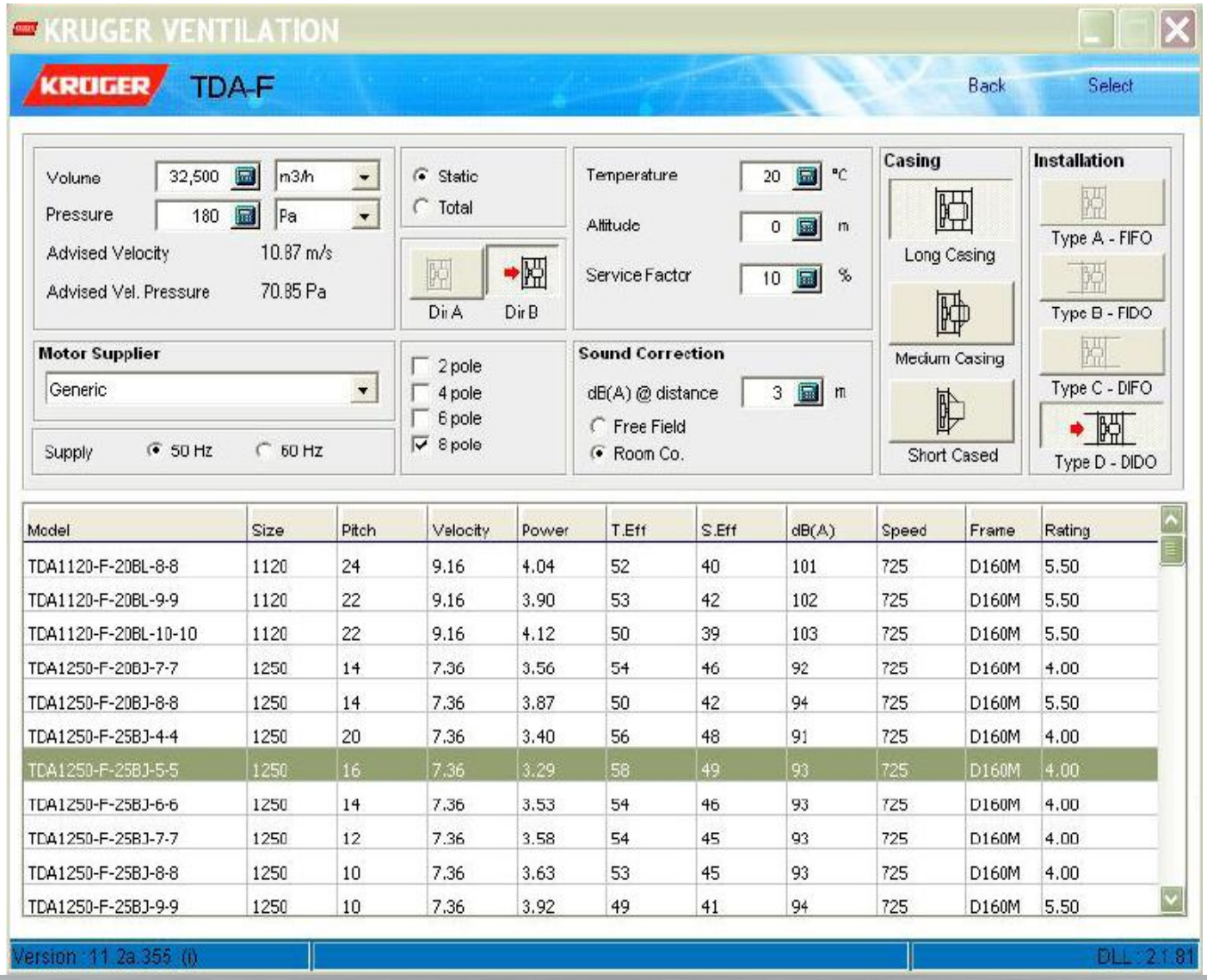

Axial Fan Selection

Example 2: two speed operation

Low speed

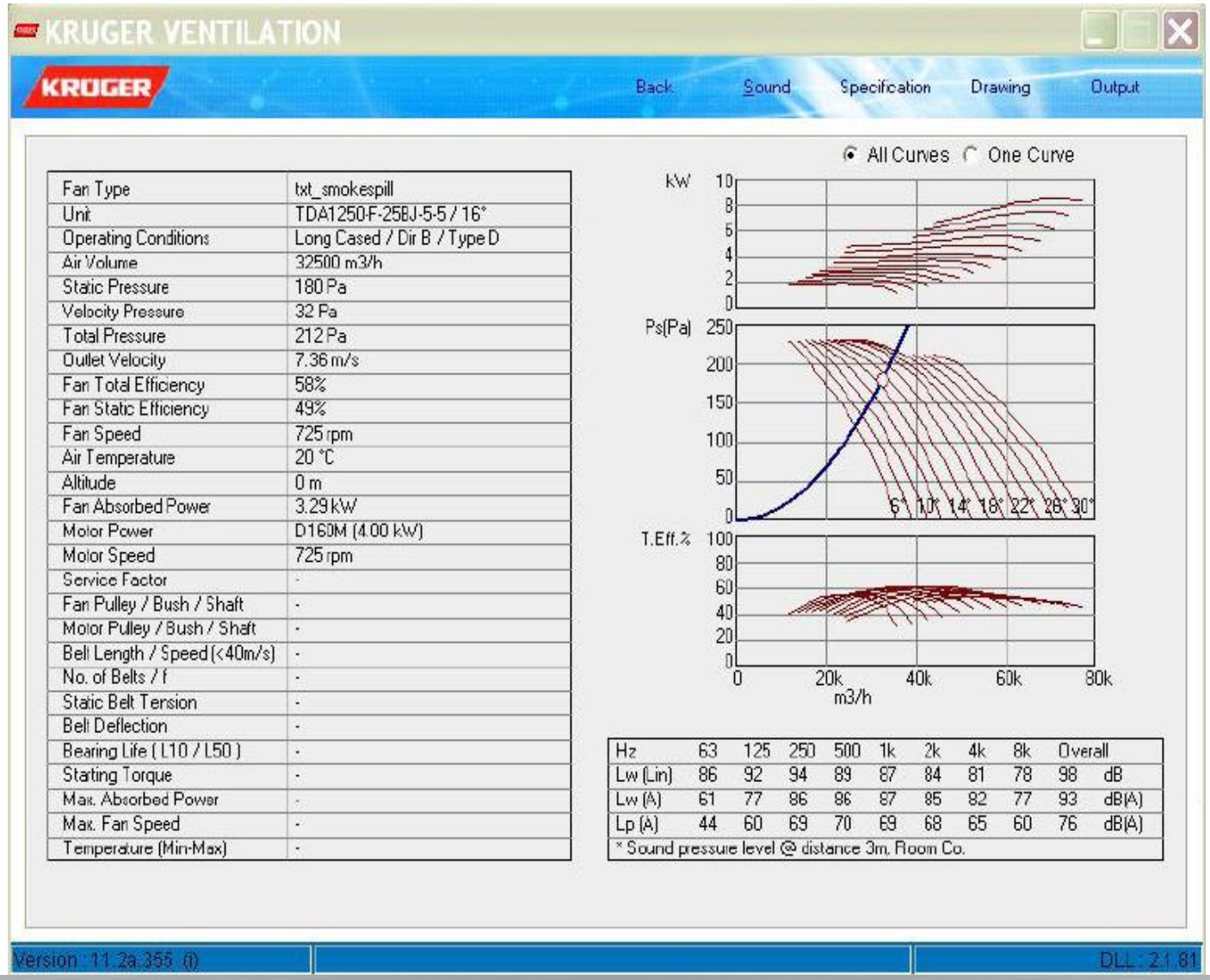

Fan Type	txt_smokespill
Unit	TDA1250-F-25BJ-5-5 / 16°
Operating Conditions	Long Cased / Dir B / Type D
Air Volume	32500 m3/h
Static Pressure	180 Pa
Velocity Pressure	32 Pa
Total Pressure	212 Pa
Outlet Velocity	7.36 m/s
Fan Total Efficiency	58%
Fan Static Efficiency	49%
Fan Speed	725 rpm
Air Temperature	20 °C
Altitude	0 m
Fan Absorbed Power	3.29 kW
Motor Power	D160M (4.00 kW)
Motor Speed	725 rpm
Service Factor	-
Fan Pulley / Bush / Shaft	-
Motor Pulley / Bush / Shaft	-
Belt Length / Speed (<40m/s)	-
No. of Belts / f	-
Static Belt Tension	-
Belt Deflection	-
Bearing Life (L10 / L50)	-
Starting Torque	-
Max. Absorbed Power	-
Max. Fan Speed	-
Temperature (Min-Max)	-

Hz	63	125	250	500	1k	2k	4k	8k	Overall	
Lw (Lin)	86	92	94	89	87	84	81	78	98	dB
Lw (A)	61	77	86	86	87	85	82	77	93	dB(A)
Lp (A)	44	60	69	70	69	68	65	60	76	dB(A)

* Sound pressure level @ distance 3m, Room Co.

Axial Fan Selection

Example 2: two speed operation

Comparison table for high speed vs low speed

	High Speed	Low Speed
Fan Type	TDA1250F/25BJ/5-5/16/AL	TDA1250F/25BJ/5-5/16/AL
Air Quantity (CMH)	**65000**	**32500**
Static Pressure (Pa)	**720**	**180**
Fan Speed (rpm)	**1450**	**725**
Motor Power (kW)	**30**	**4**

Axial Fan Selection

Example 3：vane axial

Project - Ubi Ave 1, plot 1, 2 & 3

SCHEDULE OF TECHNICAL REQUIREMENTS FOR VENTILATION FANS					
FAN DESIGNATION	AREA SERVED	TYPE OF FAN	AIR QTY. (CMH)	APPROX. STATIC PRESSURE (Pa)	EST. MOTOR RATING (kW)
F(E)/1-6B	Male & Female H'cap Toilet	AXIAL	1680	200	0.37

Example 3：vane axial

n = 1450 rpm

Q = 1680 CMH = 1680 / 3600 = 0.47 m³/s

Pt = 200 + 5 = 205 Pa

$$n_s = 5.54\, n \frac{Q^{0.5}}{(Pt)^{0.75}}$$

$$= 5.54 \times 1450 \times \frac{(0.47)^{0.5}}{(205)^{0.75}}$$

$$= 101.65$$

Specific Speed	Fan Type
ns < 10	Radial Blade
ns = 15 ~ 65	Forward Curve
ns = 20 ~ 90	Backward Inclined
ns = 40 ~ 95	Mixed-Flow
ns = 50 ~ 150	Vane axial
ns = 70 ~ 250	Tube axial
ns = 100 ~ 400	Propeller

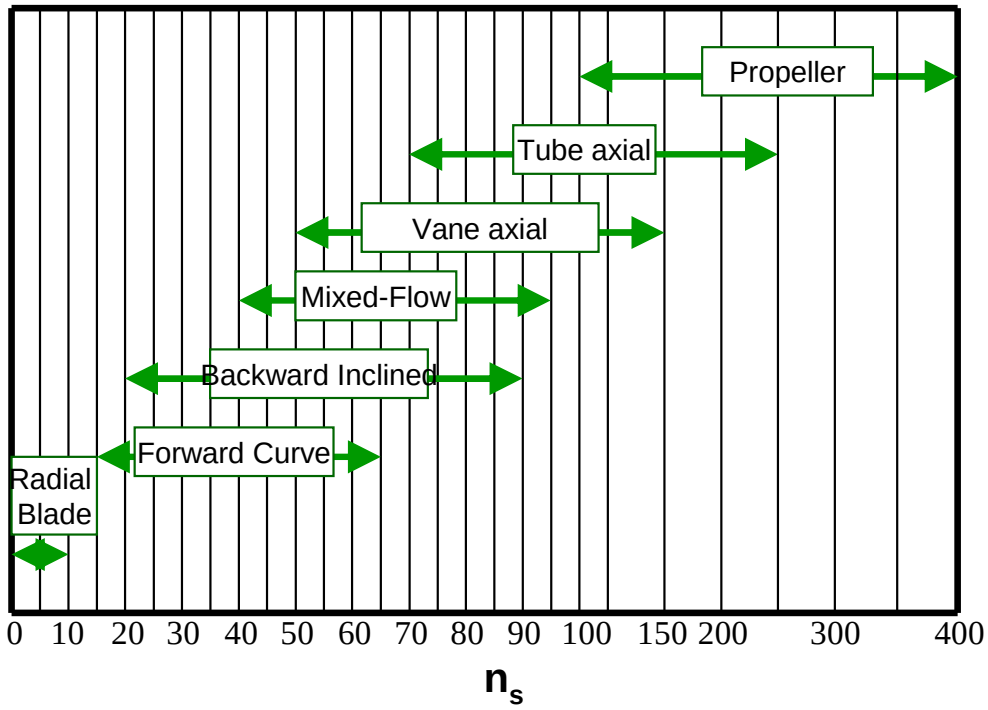

Hence, the required fan can be vane axial, tube axial or propeller fan.

Axial Fan Selection

Example 3：vane axial

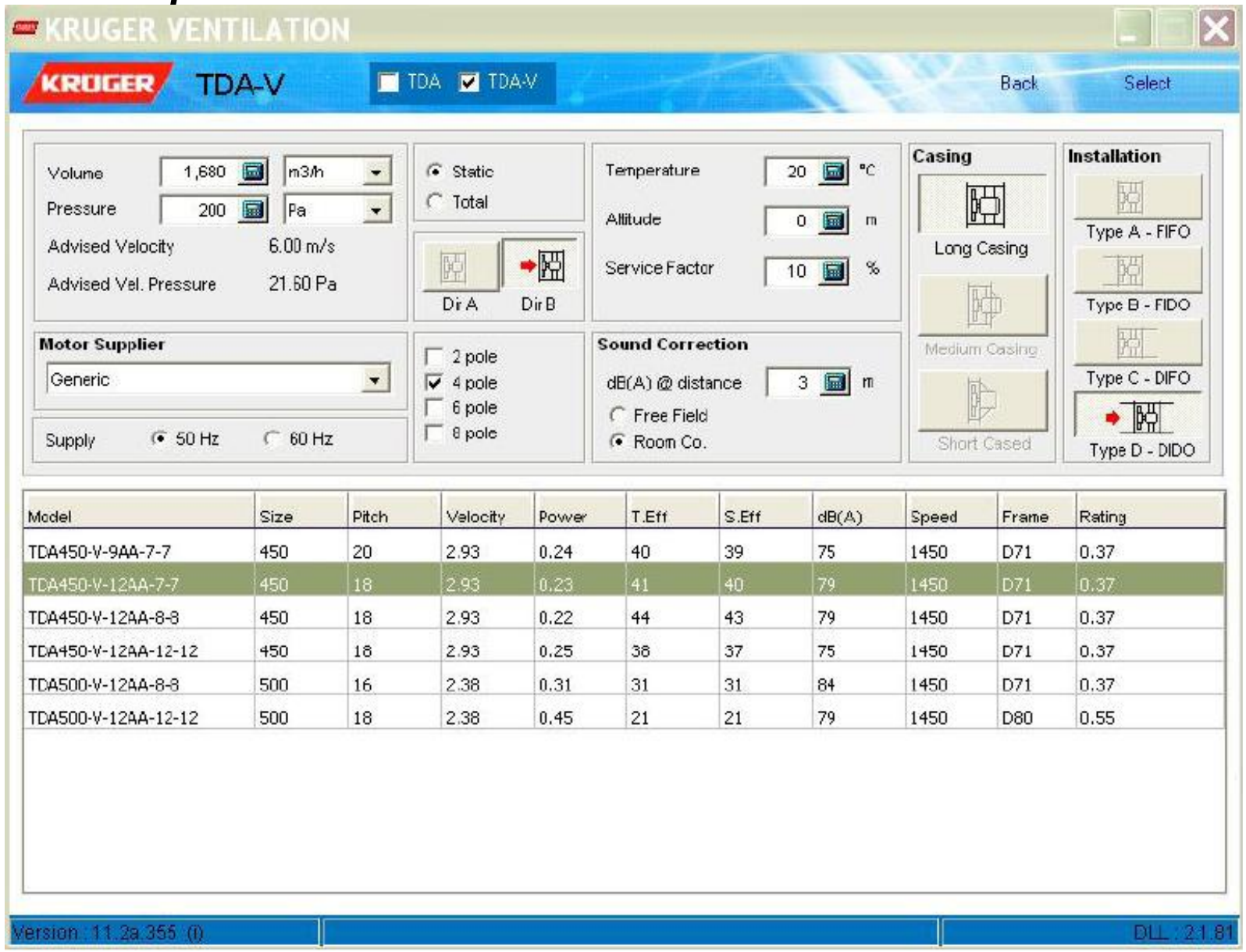

Axial Fan Selection

Example 3：vane axial

KRUGER VENTILATION

KRUGER | Back | Sound | Specification | Drawing | Output

Fan Type	Vane Axial
Unit	TDA450-V-12AA-7-7 / 18°
Operating Conditions	Long Cased / Dir B / Type D
Air Volume	1680 m3/h
Static Pressure	200 Pa
Velocity Pressure	5 Pa
Total Pressure	205 Pa
Outlet Velocity	2.93 m/s
Fan Total Efficiency	41%
Fan Static Efficiency	40%
Fan Speed	1450 rpm
Air Temperature	20 °C
Altitude	0 m
Fan Absorbed Power	0.23 kW
Motor Power	D71 (0.37 kW)
Motor Speed	1450 rpm
Service Factor	-
Fan Pulley / Bush / Shaft	-
Motor Pulley / Bush / Shaft	-
Belt Length / Speed (<40m/s)	-
No. of Belts / f	-
Static Belt Tension	-
Belt Deflection	-
Bearing Life (L10 / L50)	-
Starting Torque	-
Max. Absorbed Power	-
Max. Fan Speed	-
Temperature (Min-Max)	-

All Curves / One Curve

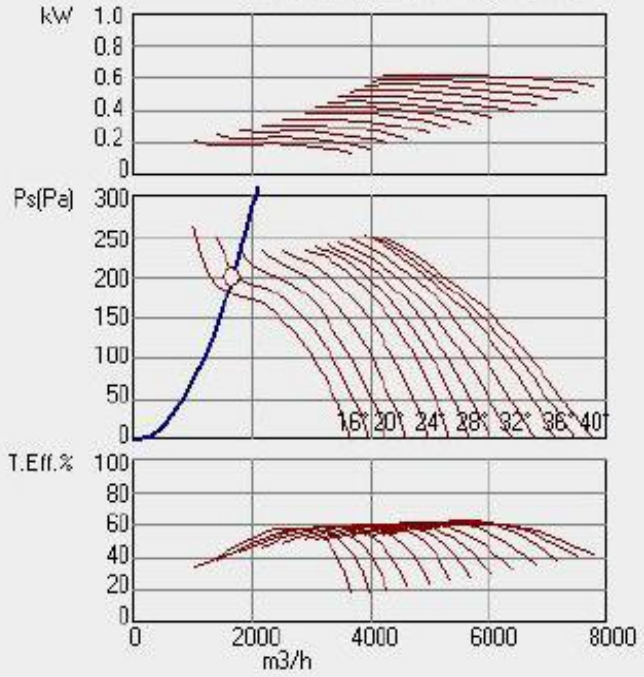

Hz	63	125	250	500	1k	2k	4k	8k	Overall	
Lw (Lin)	73	81	77	76	74	71	68	65	84	dB
Lw (A)	47	65	68	73	74	72	69	64	79	dB(A)
Lp (A)	31	49	52	56	56	55	52	47	62	dB(A)

* Sound pressure level @ distance 3m, Room Co.

Version : 11.2a.355 (i) | DLL : 2.1.81

Axial Fan Selection

Example 4：Kitchen Exhaust Fan

Project - Ubi Ave 1, plot 1, 2 & 3

SCHEDULE OF TECHNICAL REQUIREMENTS FOR VENTILATION FANS					
FAN DESIGNATION	AREA SERVED	TYPE OF FAN	AIR QTY. (CMH)	APPROX. STATIC PRESSURE (Pa)	EST. MOTOR RATING (kW)
F(E)/LR-2A	STAFF CANTEEN	AXIAL	35000	1100	30

Example 4：Kitchen Exhaust Fan

n = 1450 rpm

Q = 35000 CMH = 35000 / 3600 = 9.72 m³/s

Pt = 1100 + 38 = 1138 Pa

$$n_s = 5.54\, n \frac{Q^{0.5}}{(Pt)^{0.75}}$$

$$= 5.54 \times 1450 \times \frac{(9.72)^{0.5}}{(1138)^{0.75}}$$

$$= 127.82$$

Specific Speed	Fan Type
ns < 10	Radial Blade
ns = 15 ~ 65	Forward Curve
ns = 20 ~ 90	Backward Inclined
ns = 40 ~ 95	Mixed-Flow
ns = 50 ~ 150	Vane axial
ns = 70 ~ 250	Tube axial
ns = 100 ~ 400	Propeller

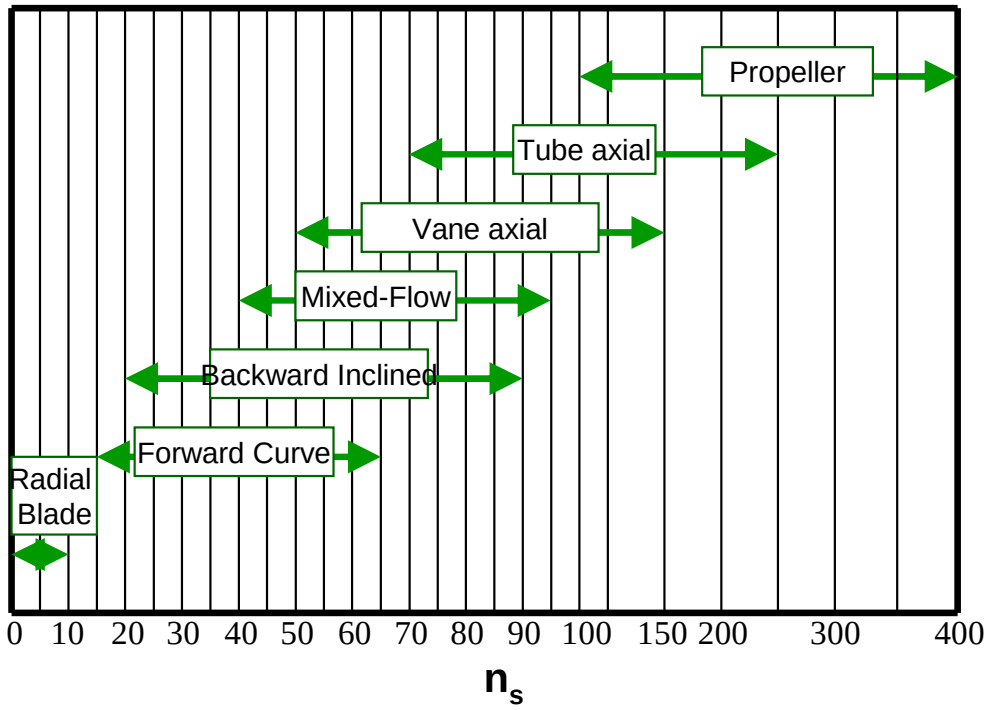

Hence, the required fan can be vane axial, tube axial or propeller fan.

Axial Fan Selection

Example 4：Kitchen Exhaust Fan

– *Option 1*

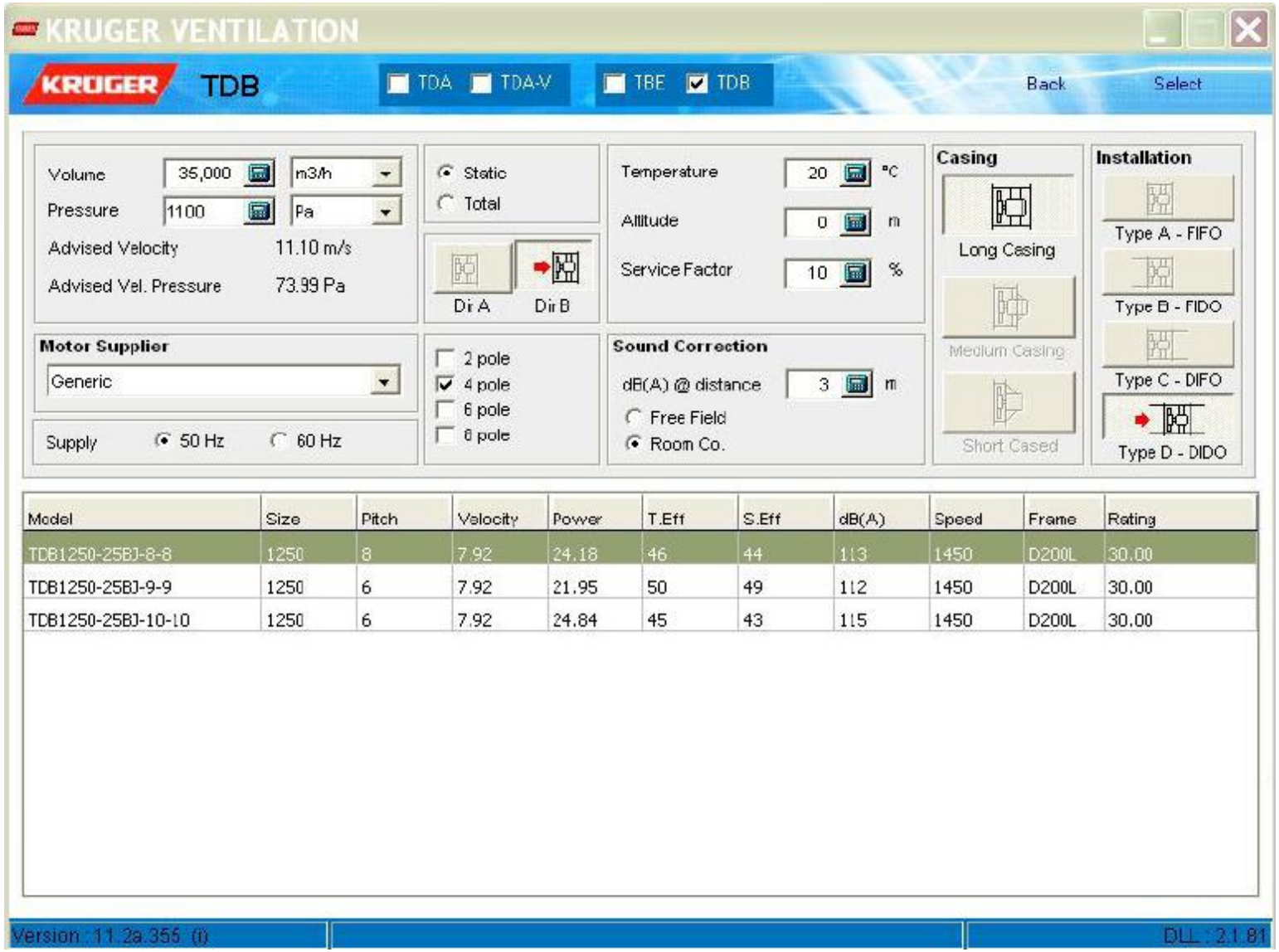

Axial Fan Selection

Example 4：Kitchen Exhaust Fan

– *Option 1*

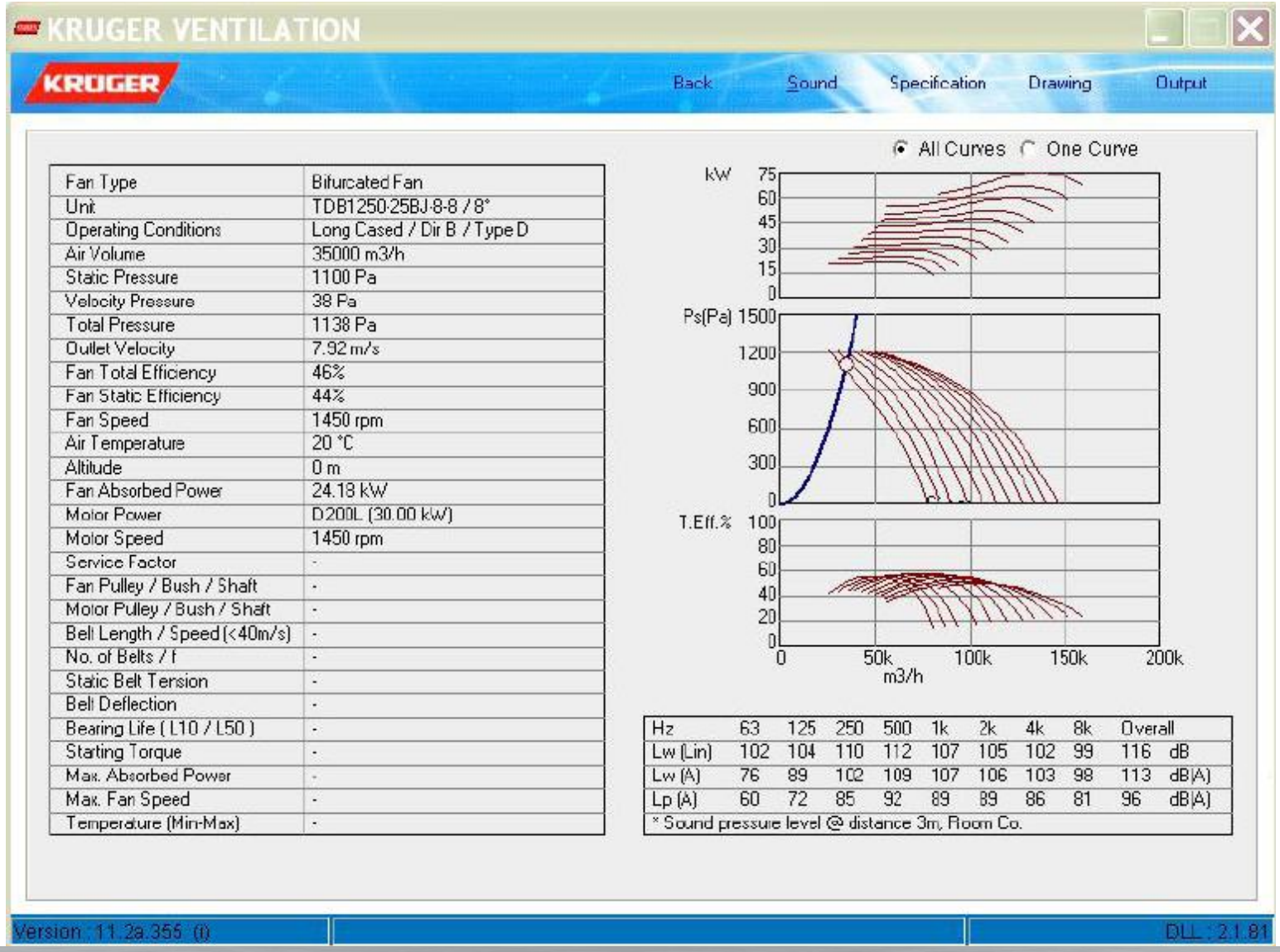

Fan Type	Bifurcated Fan
Unit	TDB1250-25BJ-8-8 / 8°
Operating Conditions	Long Cased / Dir B / Type D
Air Volume	35000 m3/h
Static Pressure	1100 Pa
Velocity Pressure	38 Pa
Total Pressure	1138 Pa
Outlet Velocity	7.92 m/s
Fan Total Efficiency	46%
Fan Static Efficiency	44%
Fan Speed	1450 rpm
Air Temperature	20 °C
Altitude	0 m
Fan Absorbed Power	24.18 kW
Motor Power	D200L (30.00 kW)
Motor Speed	1450 rpm
Service Factor	-
Fan Pulley / Bush / Shaft	-
Motor Pulley / Bush / Shaft	-
Belt Length / Speed (<40m/s)	-
No. of Belts / f	-
Static Belt Tension	-
Belt Deflection	-
Bearing Life (L10 / L50)	-
Starting Torque	-
Max. Absorbed Power	-
Max. Fan Speed	-
Temperature (Min-Max)	-

Hz	63	125	250	500	1k	2k	4k	8k	Overall	
Lw (Lin)	102	104	110	112	107	105	102	99	116	dB
Lw (A)	76	89	102	109	107	106	103	98	113	dB(A)
Lp (A)	60	72	85	92	89	89	86	81	96	dB(A)

* Sound pressure level @ distance 3m, Room Co.

Example 4:

If *n =* ~~*1450 rpm*~~ ⇨ ***n = 919 rpm***

Q = 35000 CMH = 35000 / 3600 = 9.72 m³/s

Pt = 1100 + 38 = 1138 Pa

$$n_s = 5.54\, n \frac{Q^{0.5}}{(Pt)^{0.75}}$$

$$= 5.54 \times 919 \times \frac{(9.72)^{0.5}}{(1138)^{0.75}}$$

$$= 81.01$$

Specific Speed	Fan Type
ns < 10	Radial Blade
ns = 15 ~ 65	Forward Curve
ns = 20 ~ 90	Backward Inclined
ns = 40 ~ 95	Mixed-Flow
ns = 50 ~ 150	Vane axial
ns = 70 ~ 250	Tube axial
ns = 100 ~ 400	Propeller

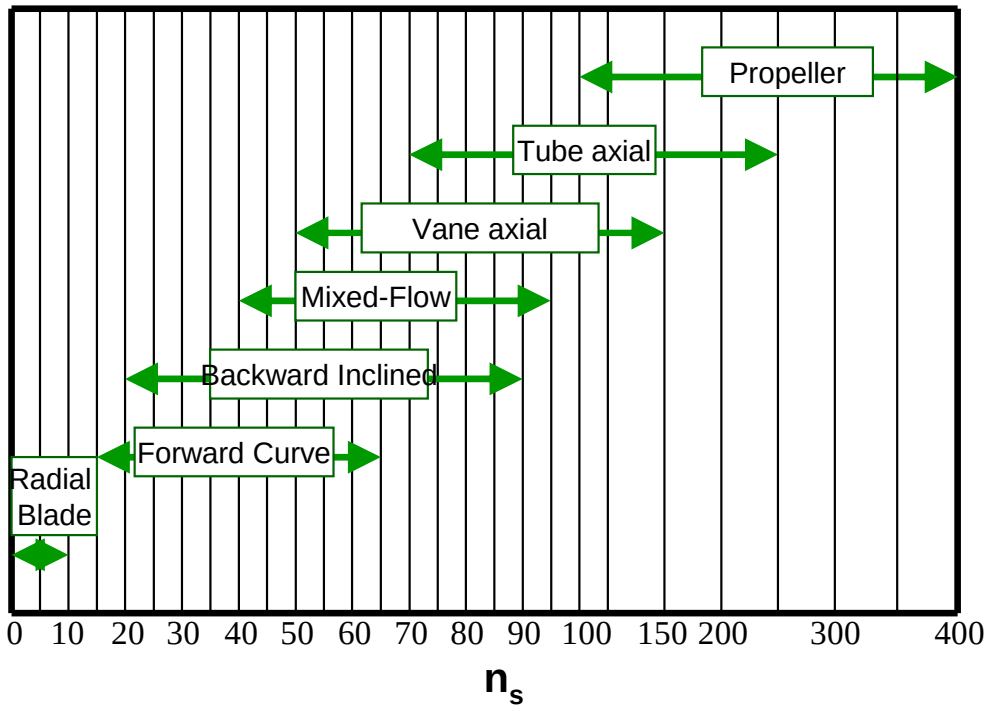

Hence, the required fan can be ***backward inclined, mixed-flow, vane axial and tube axial fan.***

Axial Fan Selection

Example 4：Kitchen Exhaust Fan

– ***Option 2***



Axial Fan Selection

Example 4：Kitchen Exhaust Fan

– ***Option 2***

KRUGER VENTILATION

Back | ASCII | Copy | Sound | Isolator | Drives | Specification | Drawing | Output

Fan Type	SISW Backward Curved
Unit	BSB1000/UIM (CLI)
Operating Conditions	Ducted
Air Volume	35000 m3/h
Static Pressure	1100 Pa
Velocity Pressure	79 Pa
Total Pressure	1179 Pa
Outlet Velocity	11.58 m/s
Fan Total Efficiency	79.3 %
Fan Static Efficiency	73.9 %
Fan Speed	919 rpm
Air Temperature	20.0 °C
Altitude	0 m
Fan Absorbed Power	14.46 kW
Motor Installed Power	D200L (18.50 kW)
Motor Speed	-
Service Factor	20 %
Plenum Size	-
Outlet Size	-
Rec. Airflow Variation	-
Fan Pulley / Bush / Shaft	-
Motor Pulley / Bush / Shaft	-
Belt Length / Speed (<40m/s)	-
No. of Belts / f	-
Static Belt Tension	-
Belt Deflection	-
Bearing Life (L10 / L50)	-
Starting Torque	-
Max. Absolbed Power	16.00 kW
Max. Fan Speed	950 rpm
Temperature (Min-Max)	-20° to +180°C

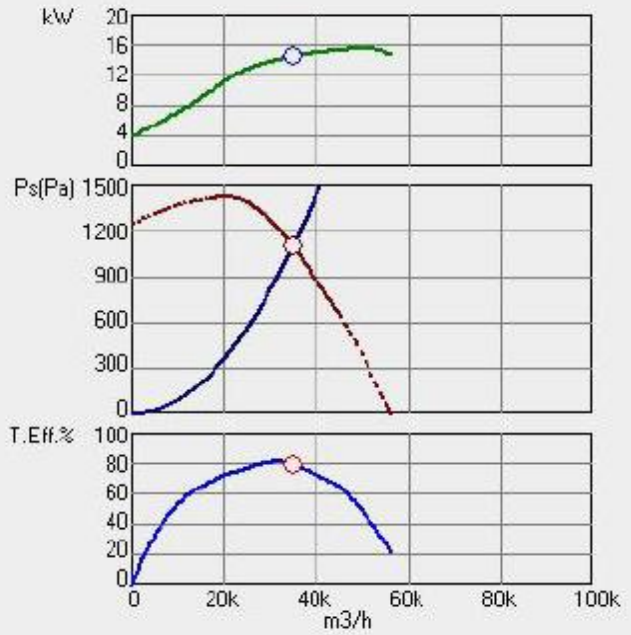

(•) At Inlet ( ) At Discharge [ ] Reg

Hz	63	125	250	500	1k	2k	4k	8k	Overall	
Lwi(Lin)	88	96	92	90	86	81	75	69	99	dB
Lwi(A)	63	80	84	87	86	82	76	68	92	dB(A)
Lpi(A)	46	64	67	71	69	65	60	51	75	dB(A)

* Sound Pressure Level 3m, Room Conditions

Version : 11.2a.355 (I) DLL : 2.1.81

Axial Fan Selection

Example 4：Kitchen Exhaust Fan

– ***Option 2***

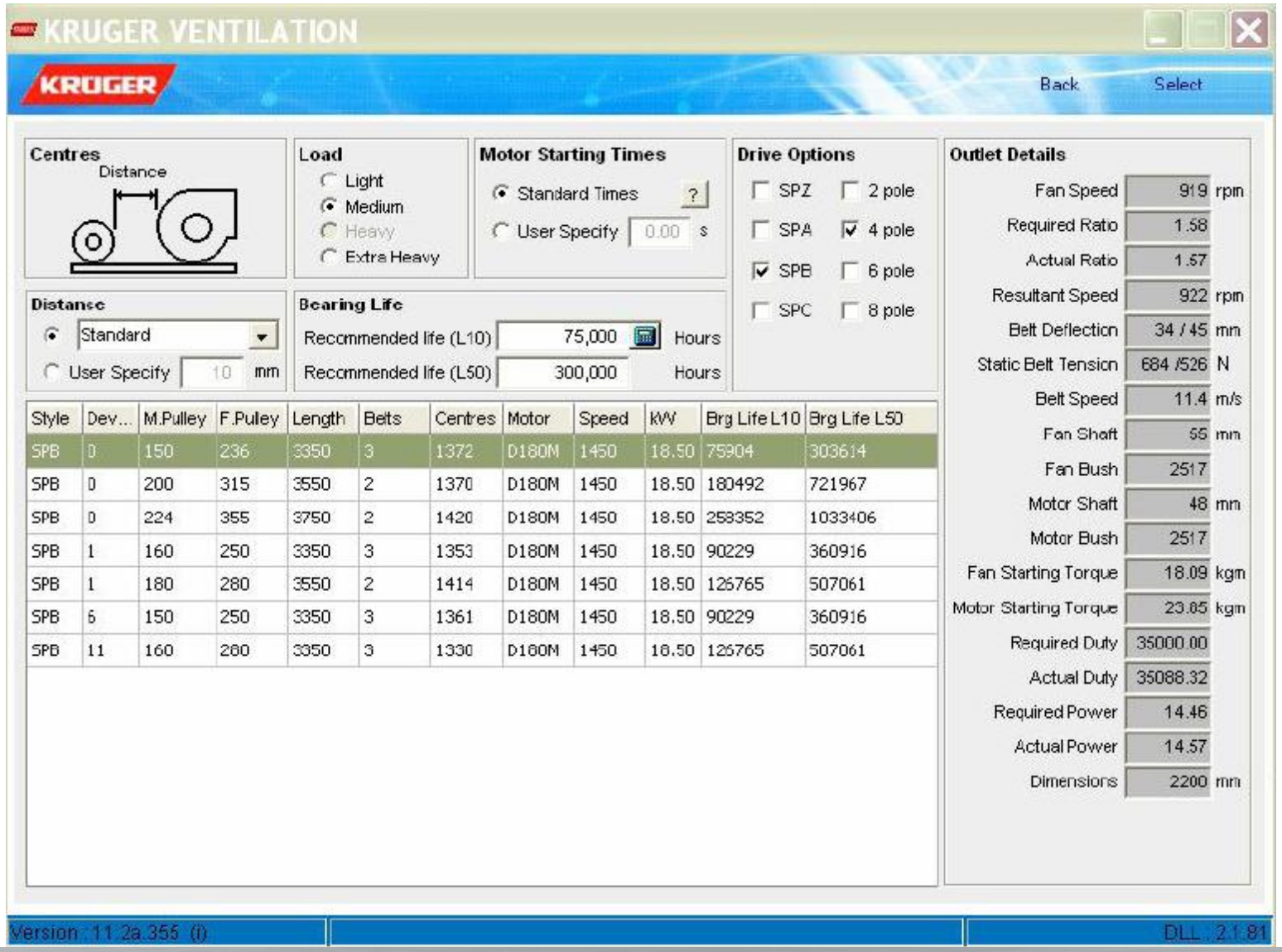

Axial Fan Selection

Comparison Table for Bifurcated axial versus Centrifugal Fan

Manufacturer	Kruger	Kruger
Country of Origin	Singapore	Singapore
Model	TDB1250/25BJ/8-8/8/AL	BSB1000/UIM(CLI)
Type of Fan	Bifurcated axial fan	Belt driven SISW Backward Curve Centrifugal Fan
Air Quantity (CMH)	35000	35000
Static Pressure (Pa)	1100	1100
Outlet Velocity (m/s)	7.92	11.58
Fan Total Efficiency(%)	46%	79.30%
Fan Speed (rpm)	1450	919
Fan Absorbed Power (kW)	24.18	14.46
Motor Power (kW)	30	18.5
Fan Diameter (mm)	1250	1000
Sound Power Level dBA	113	92
Sound Pressure Level dBA at 3m	96	75

CENTRIFUGAL FAN RANGE



FSA



BSB



BSB-F



ASA



FDA



BDB



ADA



BNA



KAT



CCK



CFT



CPF

Centrifugal Fan Selection

Example 5:

Project – AFPD

GEF fan

Air Flow = 54000 CMH

Static Pressure = 125 mmwg

Example 5:

n = 793 rpm

Q = 54000 CMH = 54000 / 3600 = 15 m³/s

Pt = 125 mmwg + 8.9 mmwg

= 133.9 mmwg = 1339 Pa

$$n_s = 5.54\, n \frac{Q^{0.5}}{(Pt)^{0.75}}$$

$$= 5.54 \times 793 \times \frac{(15)^{0.5}}{(1139)^{0.75}}$$

$$= 76.87$$

Specific Speed	Fan Type
ns < 10	Radial Blade
ns = 15 ~ 65	Forward Curve
ns = 20 ~ 90	Backward Inclined
ns = 40 ~ 95	Mixed-Flow
ns = 50 ~ 150	Vane axial
ns = 70 ~ 250	Tube axial
ns = 100 ~ 400	Propeller

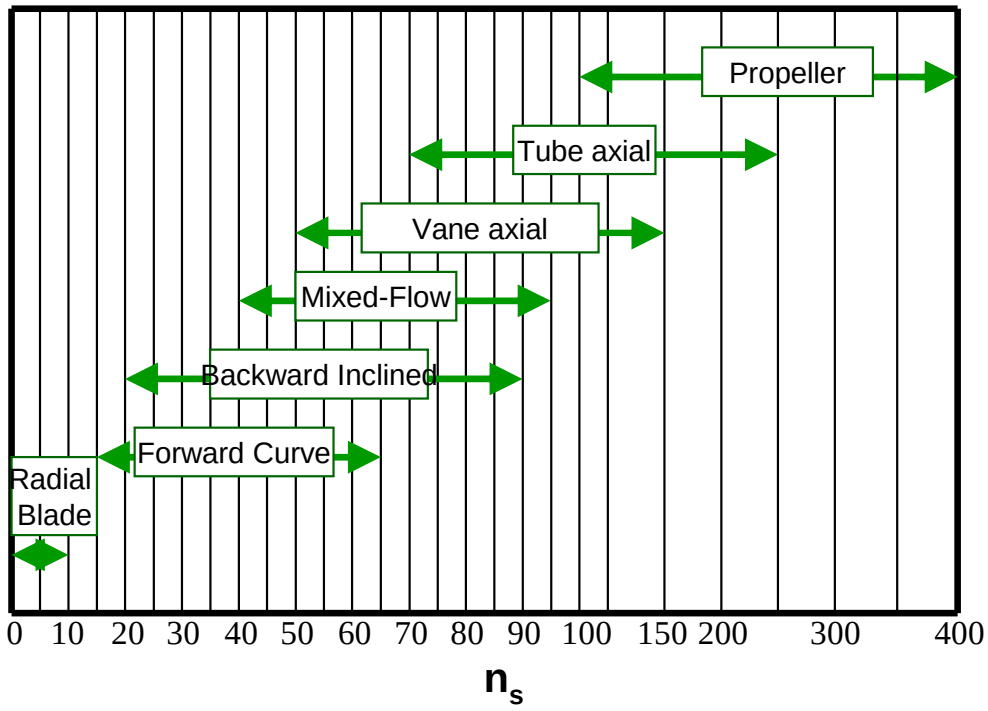

Hence, the required fan can be backward inclined, mixed flow, vane axial or tube axial fan.

Centrifugal Fan Selection

Example 5：

– ***Option 1***

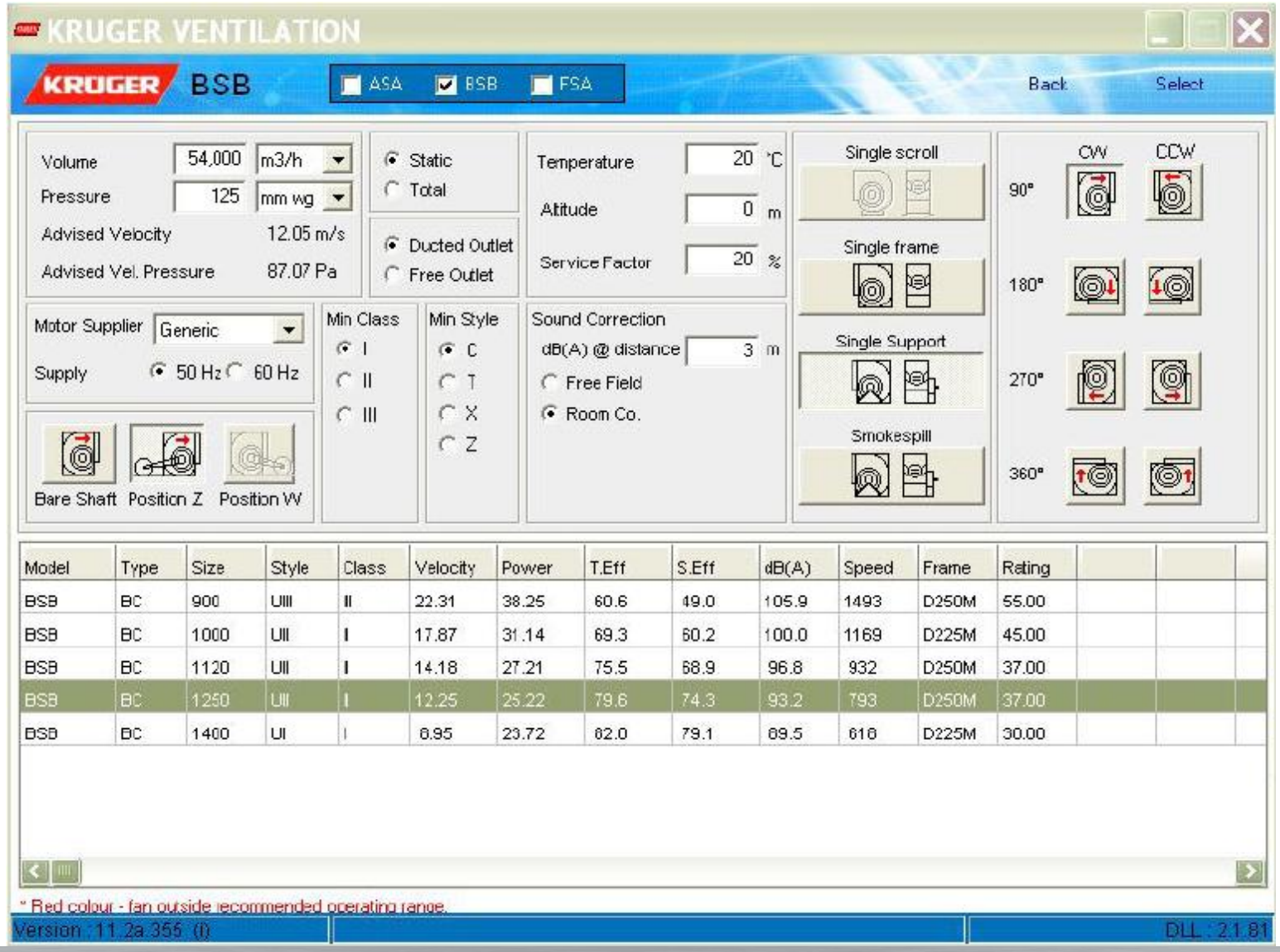

Centrifugal Fan Selection

Example 5：

– ***Option 1***

KRUGER VENTILATION

KRUGER | Back | ASCII | Copy | Sound | Isolator | Drives | Specification | Drawing | Output

Fan Type	SISW Backward Curved
Unit	BSB1250/UIIM (CLII)
Operating Conditions	Ducted
Air Volume	54000 m3/h
Static Pressure	125.0 mmwg
Velocity Pressure	8.9 mmwg
Total Pressure	133.9 mmwg
Outlet Velocity	12.25 m/s
Fan Total Efficiency	79.6 %
Fan Static Efficiency	74.3 %
Fan Speed	793 rpm
Air Temperature	20.0 °C
Altitude	0 m
Fan Absorbed Power	25.22 kW
Motor Installed Power	D250M (37.00 kW)
Motor Speed	-
Service Factor	20 %
Plenum Size	-
Outlet Size	-
Rec. Airflow Variation	-
Fan Pulley / Bush / Shaft	-
Motor Pulley / Bush / Shaft	-
Belt Length / Speed (<40m/s)	-
No. of Belts / f	-
Static Belt Tension	-
Belt Deflection	-
Bearing Life (L10 / L50)	-
Starting Torque	-
Max. Absorbed Power	55.00 kW
Max. Fan Speed	1000 rpm
Temperature (Min-Max)	-20° to +180°C

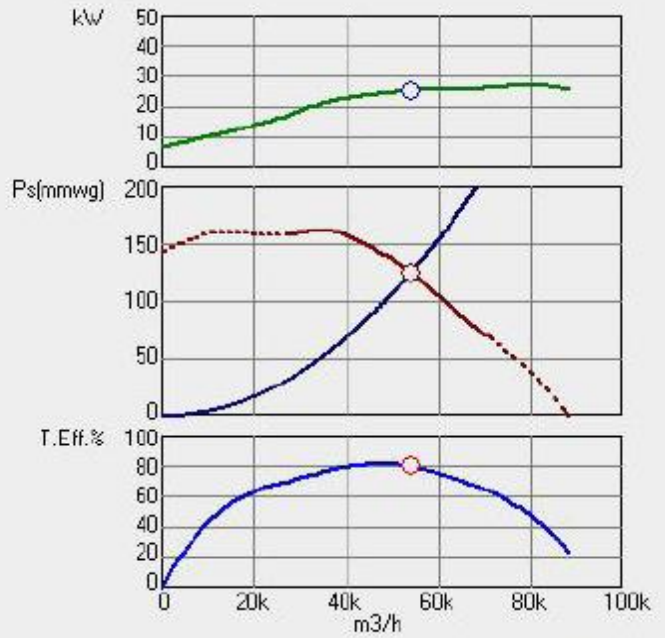

(•) At Inlet ( ) At Discharge [ ] Reg

Hz	63	125	250	500	1k	2k	4k	8k	Overall	
Lwi(Lin)	100	102	95	91	86	81	76	71	105	dB
Lwi(A)	75	86	86	88	86	82	77	70	93	dB(A)
Lpi(A)	58	70	70	71	69	65	60	54	76	dB(A)

* Sound Pressure Level 3m, Room Conditions

Version : 11.2a.355 (i) DLL : 2.1.81

Centrifugal Fan Selection

Example 5：

– ***Option 1***

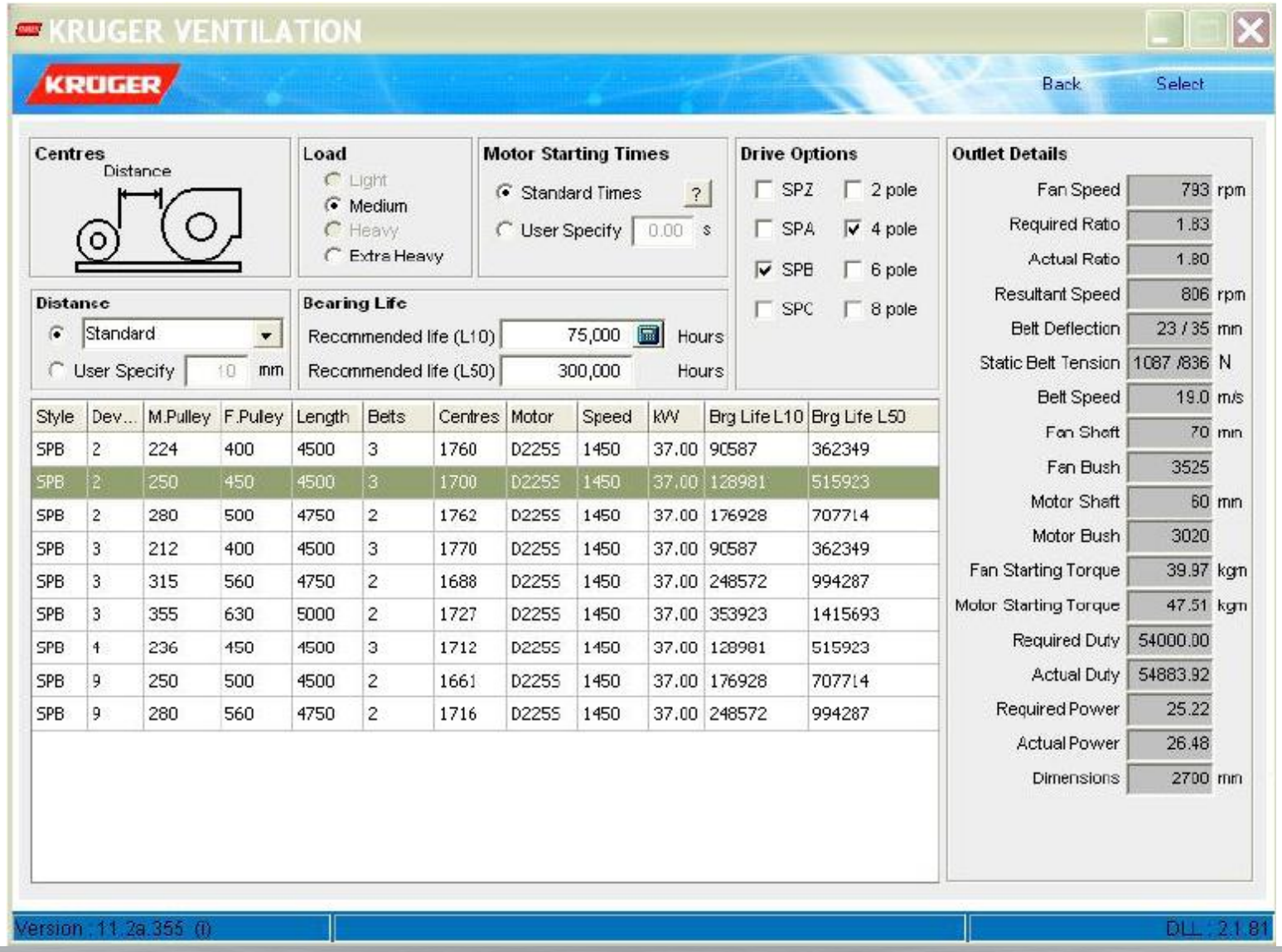

Centrifugal Fan Selection

Example 5:

– ***Option 1***

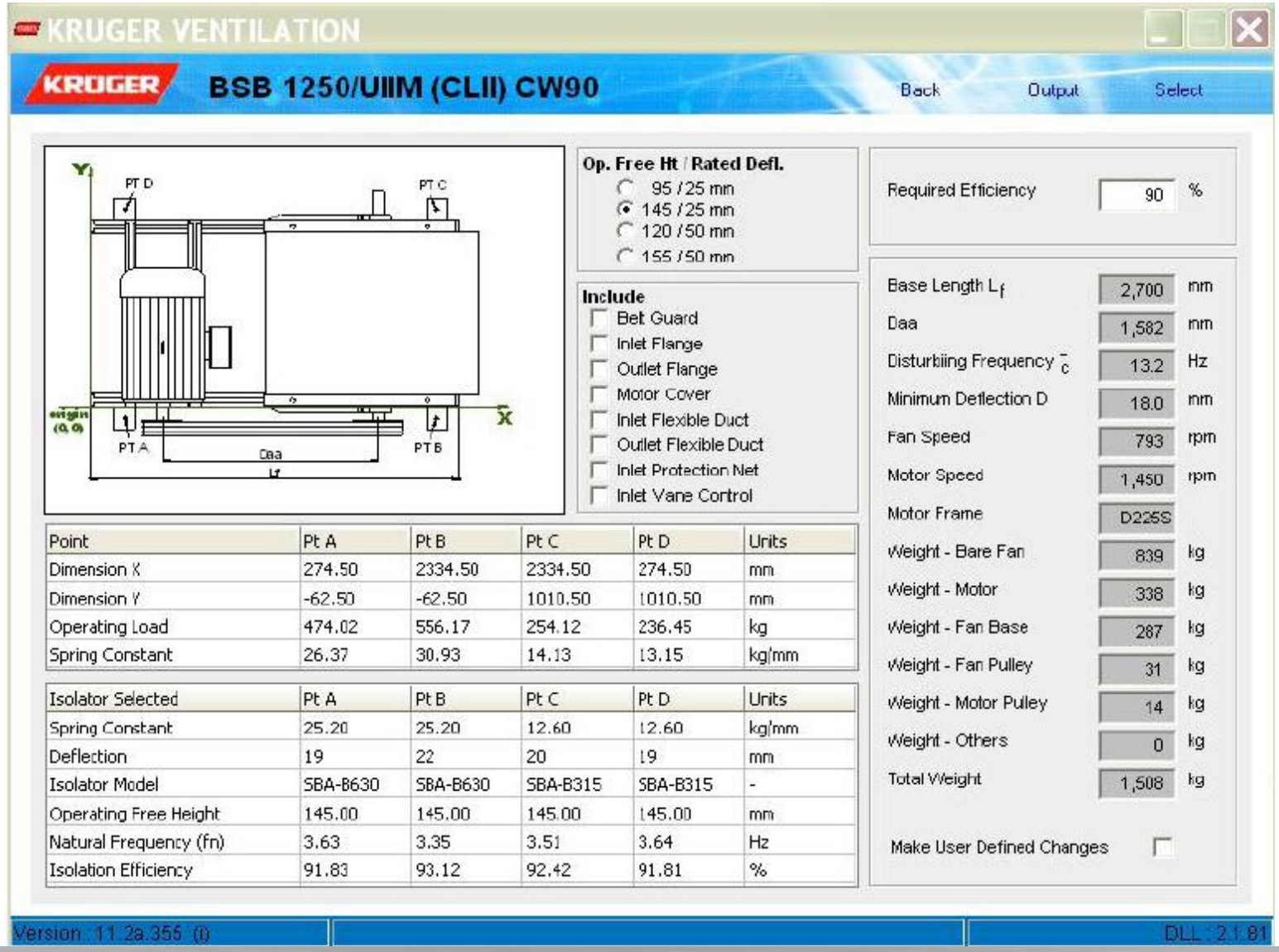

Point	Pt A	Pt B	Pt C	Pt D	Units
Dimension X	274.50	2334.50	2334.50	274.50	mm
Dimension Y	-62.50	-62.50	1010.50	1010.50	mm
Operating Load	474.02	556.17	254.12	236.45	kg
Spring Constant	26.37	30.93	14.13	13.15	kg/mm

Isolator Selected	Pt A	Pt B	Pt C	Pt D	Units
Spring Constant	25.20	25.20	12.60	12.60	kg/mm
Deflection	19	22	20	19	mm
Isolator Model	SBA-B630	SBA-B630	SBA-B315	SBA-B315	-
Operating Free Height	145.00	145.00	145.00	145.00	mm
Natural Frequency (fn)	3.63	3.35	3.51	3.64	Hz
Isolation Efficiency	91.83	93.12	92.42	91.81	%

Example 5:

If *n =* ~~*793 rpm*~~ ⇨ ***n = 1450 rpm***

Q = 54000 CMH = 54000 / 3600 = 15 m³/s

Pt = 125 mmwg + 8.9 mmwg

= 133.9 mmwg = 1339 Pa

$$n_s = 5.54\, n \frac{Q^{0.5}}{(Pt)^{0.75}}$$

$$= 5.54 \times \mathbf{1450} \times \frac{(15)^{0.5}}{(1139)^{0.75}}$$

$$= \mathbf{140.55}$$

Specific Speed	Fan Type
ns < 10	Radial Blade
ns = 15 ~ 65	Forward Curve
ns = 20 ~ 90	Backward Inclined
ns = 40 ~ 95	Mixed-Flow
ns = 50 ~ 150	Vane axial
ns = 70 ~ 250	Tube axial
ns = 100 ~ 400	Propeller

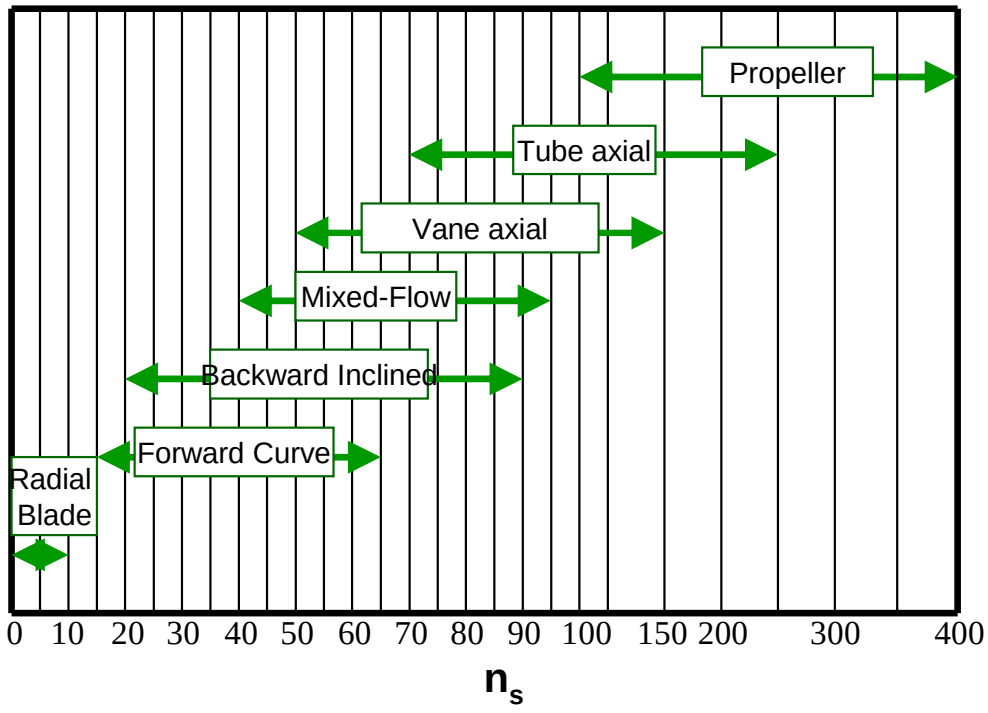

Hence, the required fan can be ***vane axial, tube axial and propeller fan.***

Centrifugal Fan Selection

Example 5：

– ***Option 2***

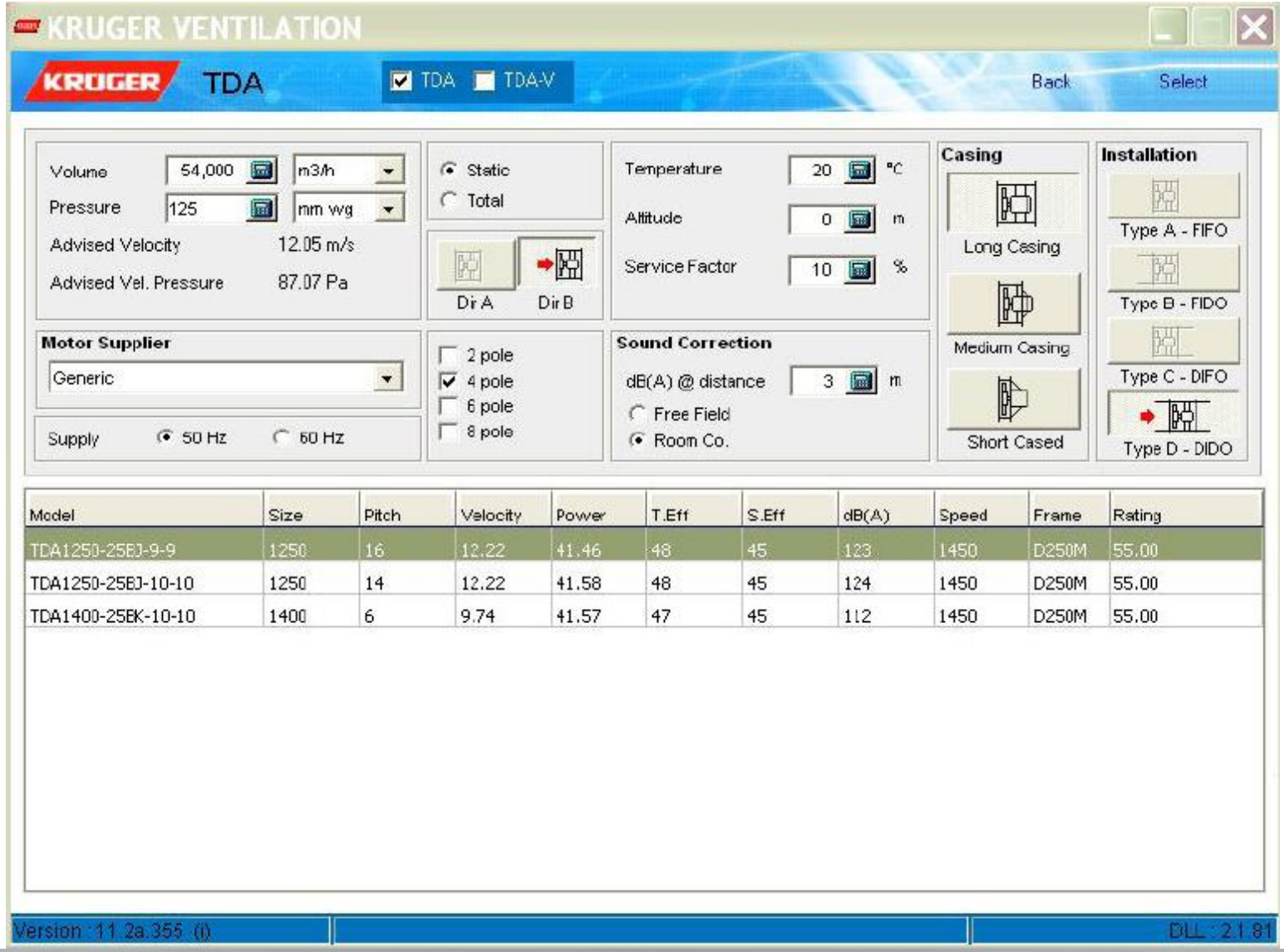

Centrifugal Fan Selection

Example 5：

– ***Option 2***

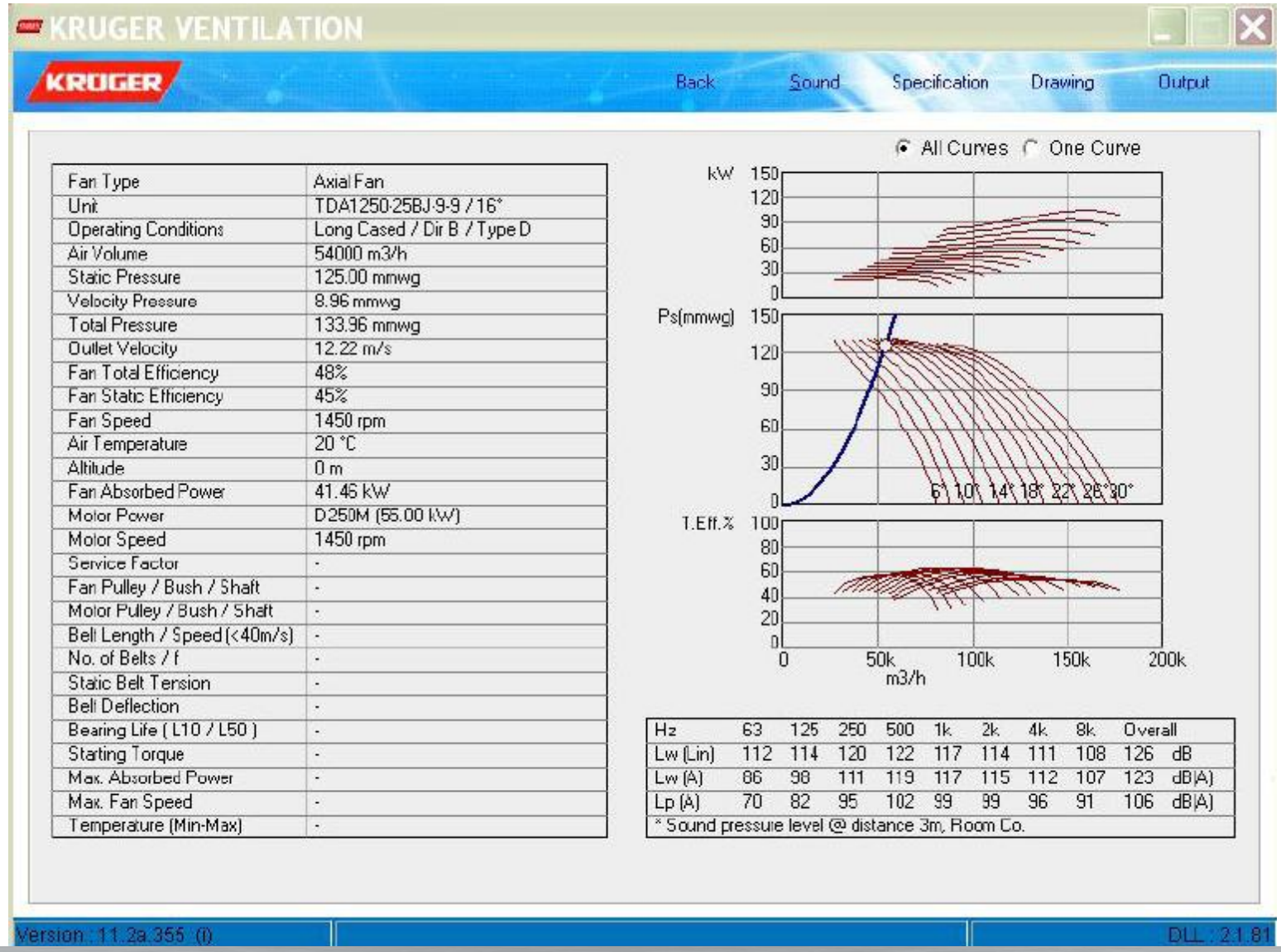

Fan Type	Axial Fan
Unit	TDA1250-25BJ-9-9 / 16°
Operating Conditions	Long Cased / Dir B / Type D
Air Volume	54000 m3/h
Static Pressure	125.00 mmwg
Velocity Pressure	8.96 mmwg
Total Pressure	133.96 mmwg
Outlet Velocity	12.22 m/s
Fan Total Efficiency	48%
Fan Static Efficiency	45%
Fan Speed	1450 rpm
Air Temperature	20 °C
Altitude	0 m
Fan Absorbed Power	41.46 kW
Motor Power	D250M (55.00 kW)
Motor Speed	1450 rpm
Service Factor	-
Fan Pulley / Bush / Shaft	-
Motor Pulley / Bush / Shaft	-
Belt Length / Speed (<40m/s)	-
No. of Belts / f	-
Static Belt Tension	-
Belt Deflection	-
Bearing Life (L10 / L50)	-
Starting Torque	-
Max. Absorbed Power	-
Max. Fan Speed	-
Temperature (Min-Max)	-

Hz	63	125	250	500	1k	2k	4k	8k	Overall	
Lw (Lin)	112	114	120	122	117	114	111	108	126	dB
Lw (A)	86	98	111	119	117	115	112	107	123	dB(A)
Lp (A)	70	82	95	102	99	99	96	91	106	dB(A)
* Sound pressure level @ distance 3m, Room Co.										

Centrifugal Fan Selection

Example 5：

– ***Option 3***

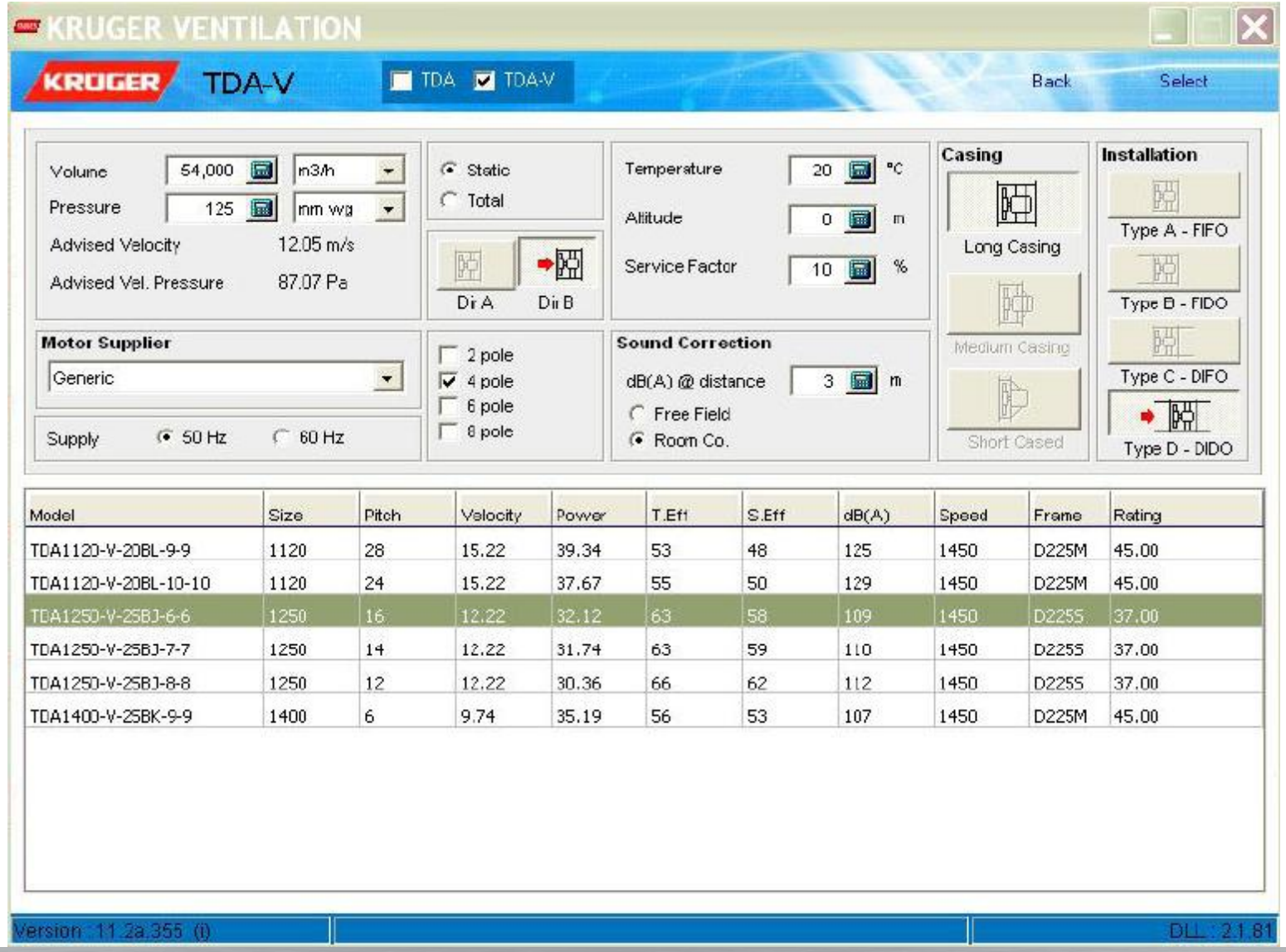

Centrifugal Fan Selection

Example 5：

– ***Option 3***

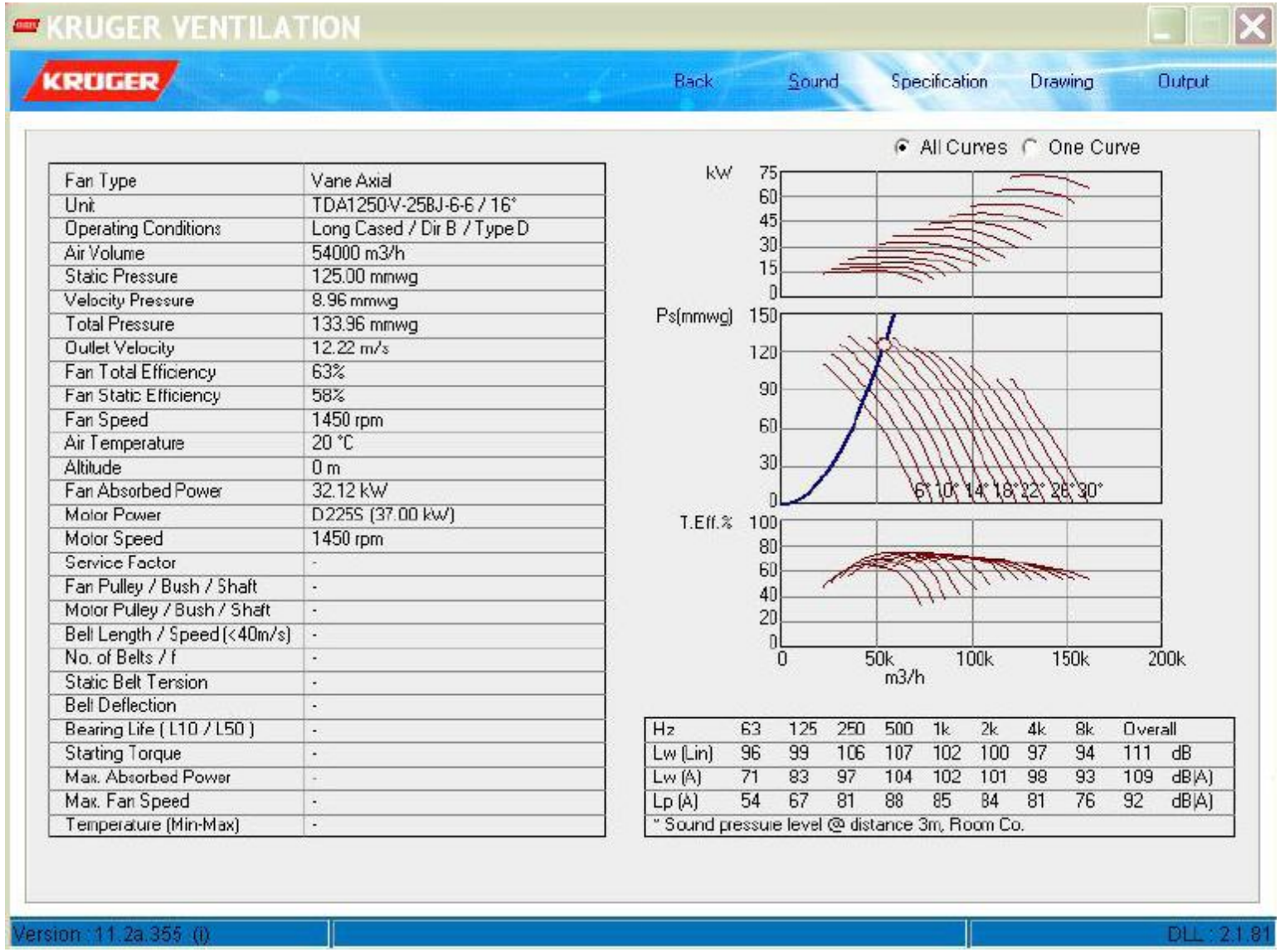

Fan Type	Vane Axial
Unit	TDA1250-V-25BJ-6-6 / 16°
Operating Conditions	Long Cased / Dir B / Type D
Air Volume	54000 m3/h
Static Pressure	125.00 mmwg
Velocity Pressure	8.96 mmwg
Total Pressure	133.96 mmwg
Outlet Velocity	12.22 m/s
Fan Total Efficiency	63%
Fan Static Efficiency	58%
Fan Speed	1450 rpm
Air Temperature	20 °C
Altitude	0 m
Fan Absorbed Power	32.12 kW
Motor Power	D225S (37.00 kW)
Motor Speed	1450 rpm
Service Factor	-
Fan Pulley / Bush / Shaft	-
Motor Pulley / Bush / Shaft	-
Belt Length / Speed (<40m/s)	-
No. of Belts / f	-
Static Belt Tension	-
Belt Deflection	-
Bearing Life (L10 / L50)	-
Starting Torque	-
Max. Absorbed Power	-
Max. Fan Speed	-
Temperature (Min-Max)	-

Hz	63	125	250	500	1k	2k	4k	8k	Overall	
Lw (Lin)	96	99	106	107	102	100	97	94	111	dB
Lw (A)	71	83	97	104	102	101	98	93	109	dB(A)
Lp (A)	54	67	81	88	85	84	81	76	92	dB(A)

" Sound pressure level @ distance 3m, Room Co.

Centrifugal Fan Selection

Comparison Table for Centrifugal Fan vs Axial Fan vs Vane Axial Fan

Manufacturer	Kruger	Kruger	Kruger
Country of Origin	Singapore	Singapore	Singapore
Model	BSB1250/UIIM(CLII)	TDA1250L/25BJ/9-9/16/AL	TDA1250V/25BJ/6-6/16/AL
Type of Fan	Belt driven SISW Backward Curve Centrifugal Fan	Axial Fan	Vane Axial Fan
Air Quantity (CMH)	54000	54000	54000
Static Pressure (mmwg)	125	125	125
Outlet Velocity (m/s)	12.25	11.58	12.22
Fan Total Efficiency(%)	79.60%	48.00%	63.00%
Fan Speed (rpm)	793	1450	1450
Fan Absorbed Power (kW)	25.22	41.46	32.12
Motor Power (kW)	37	55	37
Fan Diameter (mm)	1250	1250	1250
Sound Power Level dBA	93	123	109
Sound Pressure Level dBA at 3m	76	106	92

THANK YOU

KRÜGER

SYSTEM EFFECT

amca INTERNATIONAL MEMBER



KRÜGER

The CALL !!!

amca INTERNATIONAL MEMBER

"My fan isn't performing, come fix it."

"I ordered 3,000 cfm at 1 inch

Balancer said I have 2,500 at 3/4 inch."


Do you
Know what
this seal
means?
amca
CERTIFIED
RATINGS
SOUND
and
AIR
PERFORMANCE
AIR
MOVEMENT
AND CONTROL
ASSOCIATION
INTERNATIONAL, INC.

KRÜGER

AMCA International is :

- **Third party verification - Ethical practices**
- **State-of-the-art testing laboratory**

  "The AMCA International Certified Ratings Program"
- **Information source**
  - **Publications / Test Standards**
  - **Seminars and service**
  - **www.AMCA.org**

KRÜGER

How do you know the product you specified is AMCA International Licensed?

- **Look at Manufacturers' printed catalogs**
  - **is it the most current / recent? - check AMCA web site**
- **Do you use computer selection software?**
  - **is it licensed / correct formulas? - check AMCA web site**

AMCA International's web site: *www.amca.org*

KRÜGER

Fan Testing Types



AIR MOVEMENT AND CONTROL
ASSOCIATION INTERNATIONAL, INC.

Watch for Qualifying Statements

- **Test arrangement - *shown below cataloged performance data***
  - **"Performance shown is for Type A, Free inlet, Free outlet"**
  - **"Performance shown is for Type B, Free inlet, Ducted outlet"**
  - **"Performance shown is for Type C, Ducted inlet, Free outlet"**
  - **"Performance shown is for Type D, Ducted inlet, Ducted outlet"**
- **If belt driven - does it include drive losses?**

Typical Commercial Ventilation

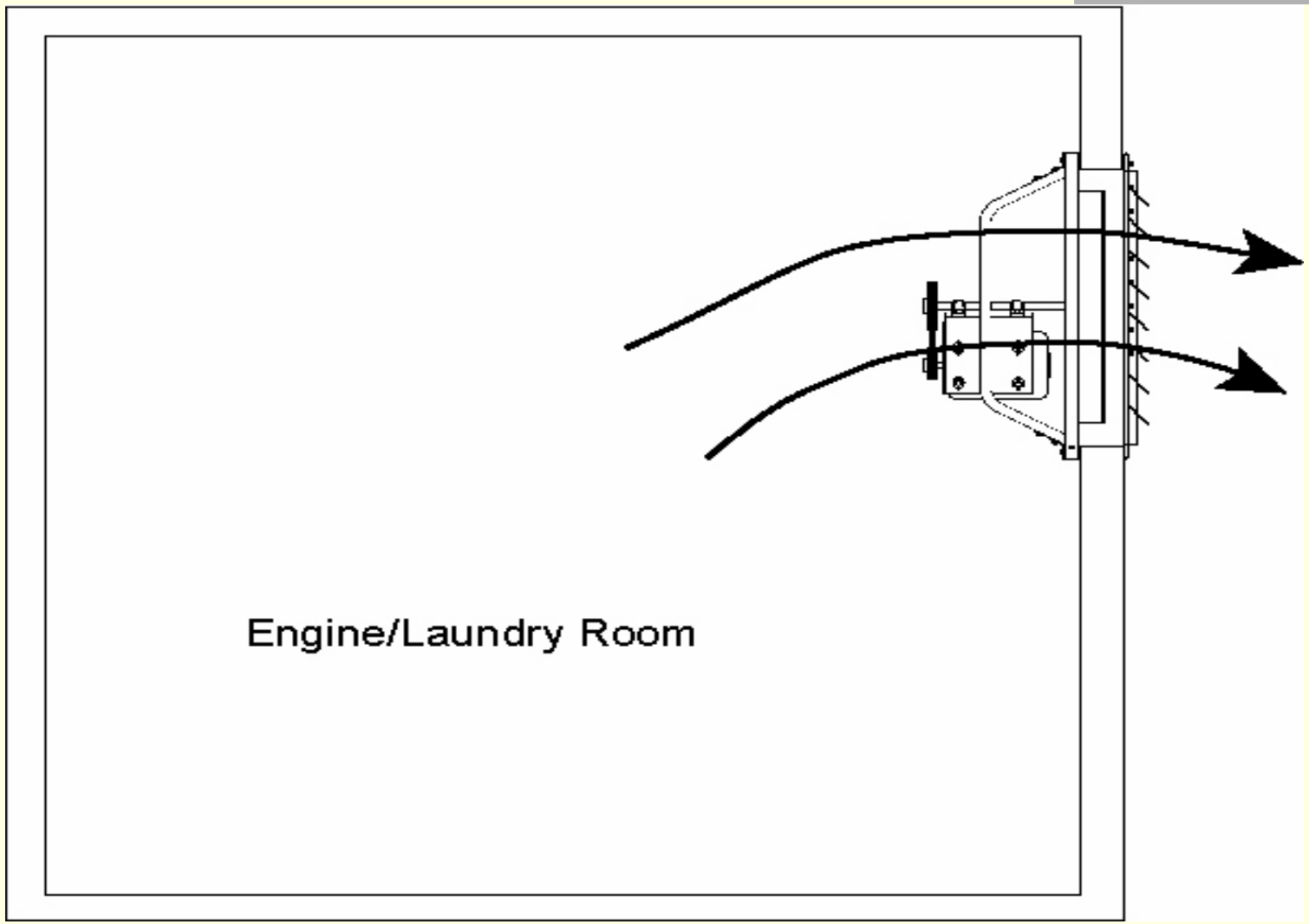

Free inlet, Free outlet (Type A)

Typical Commercial Ventilation

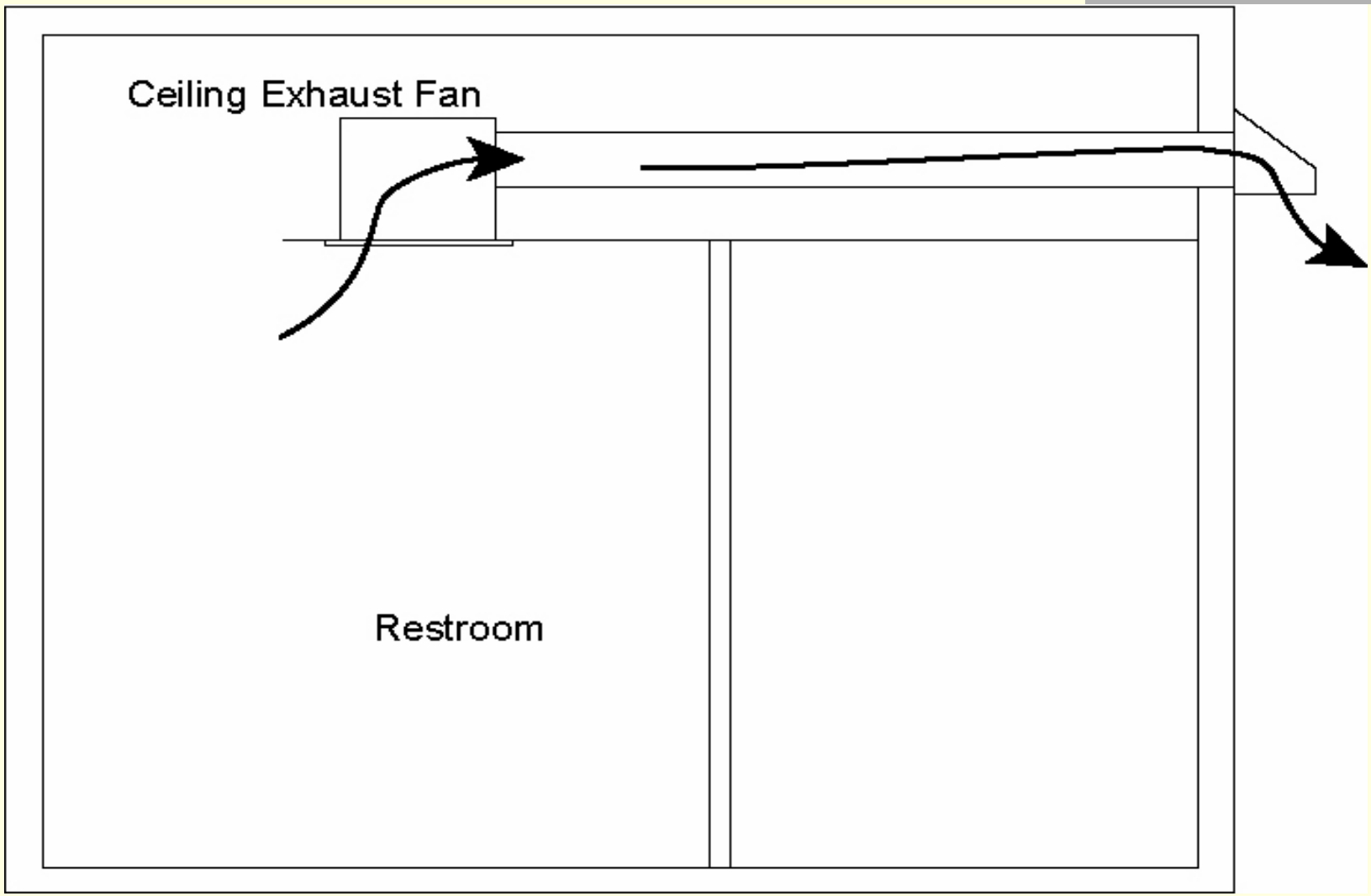

Free inlet, Ducted outlet (Type B)

Typical Commercial Ventilation

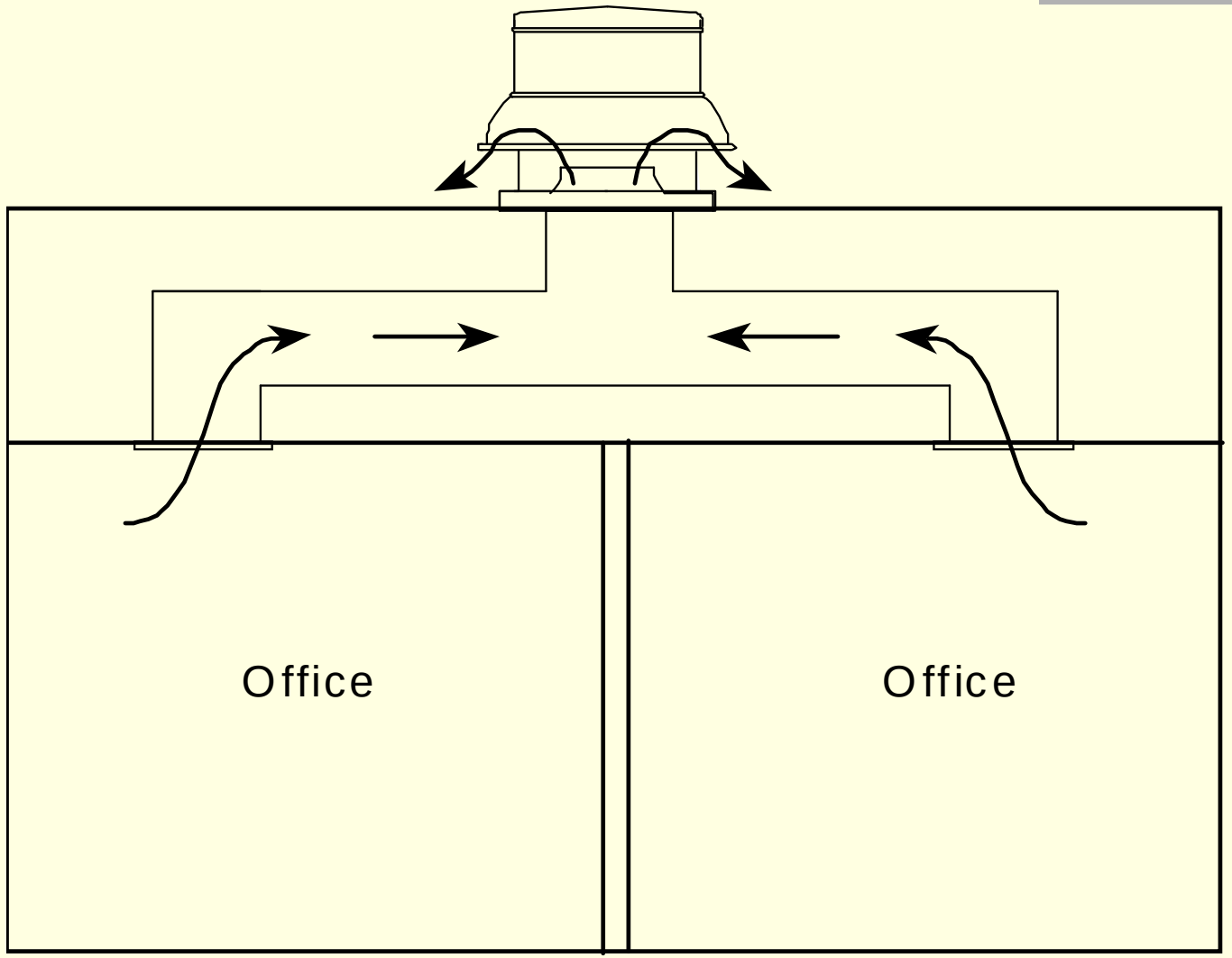

Ducted inlet, Free outlet (Type C)

Typical Commercial Ventilation

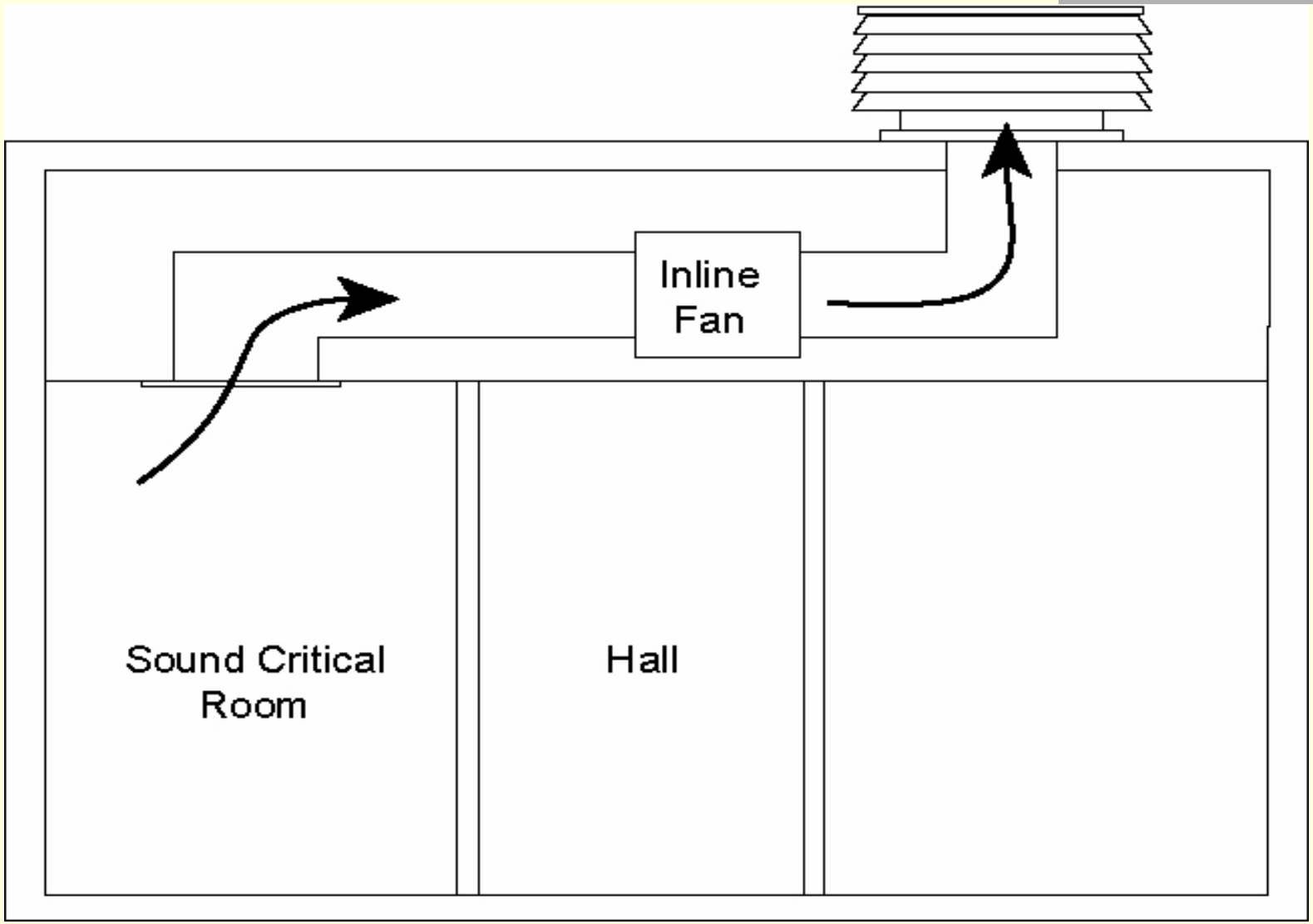

Ducted inlet, Ducted outlet (Type D)

KRÜGER

Fan Curve Basics

AIR MOVEMENT AND CONTROL
ASSOCIATION INTERNATIONAL, INC.

Fan Laws

$$CFM_{New} = \frac{RPM_{New}}{RPM_{Base}} \times CFM_{Base}$$

$$SP_{New} = \left(\frac{RPM_{New}}{RPM_{Base}} \right)^2 \times SP_{Base}$$

$$BHP_{New} = \left(\frac{RPM_{New}}{RPM_{Base}} \right)^3 \times BHP_{Base}$$

KRÜGER

Performance Fan Curve

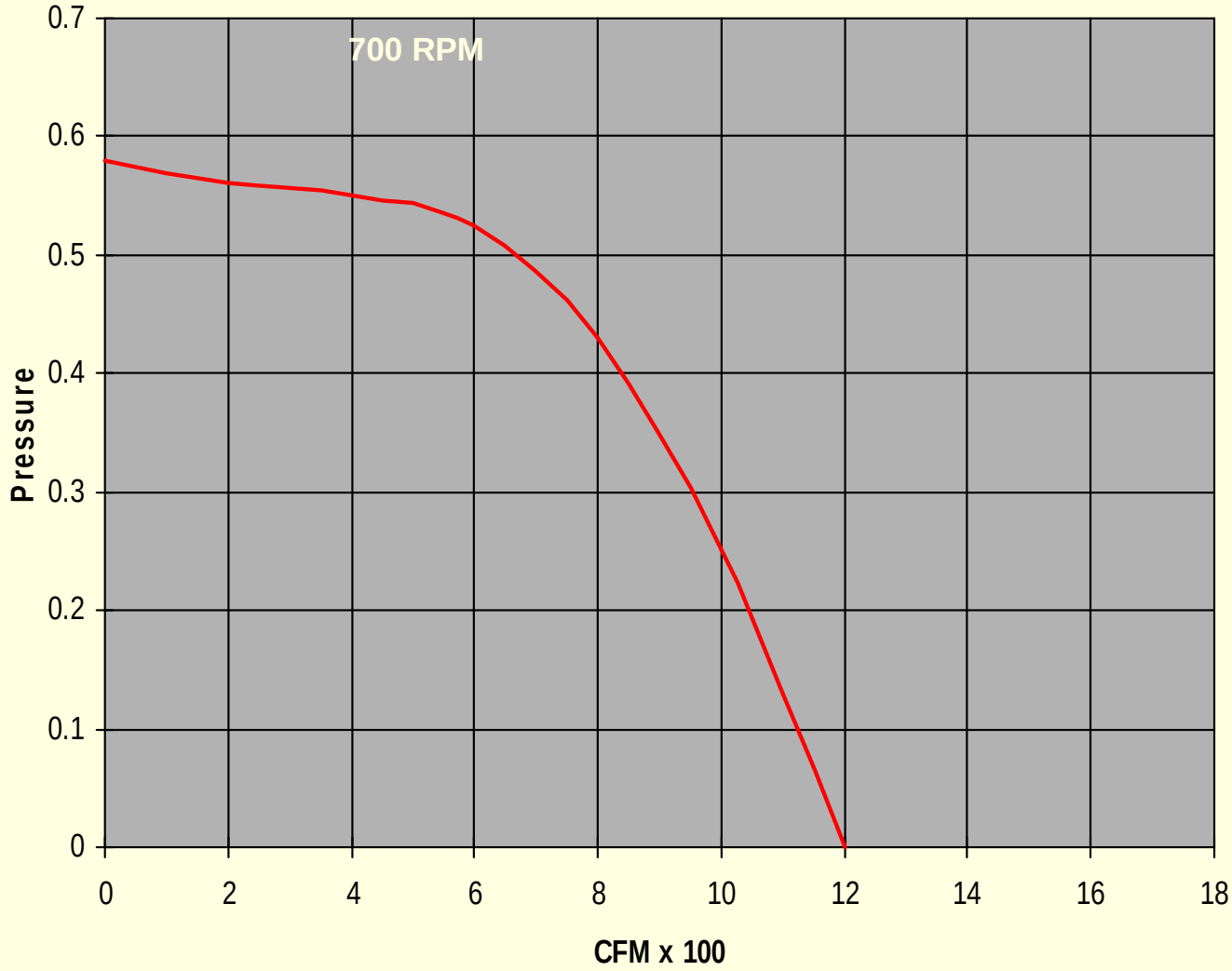

Varying Fan Curve

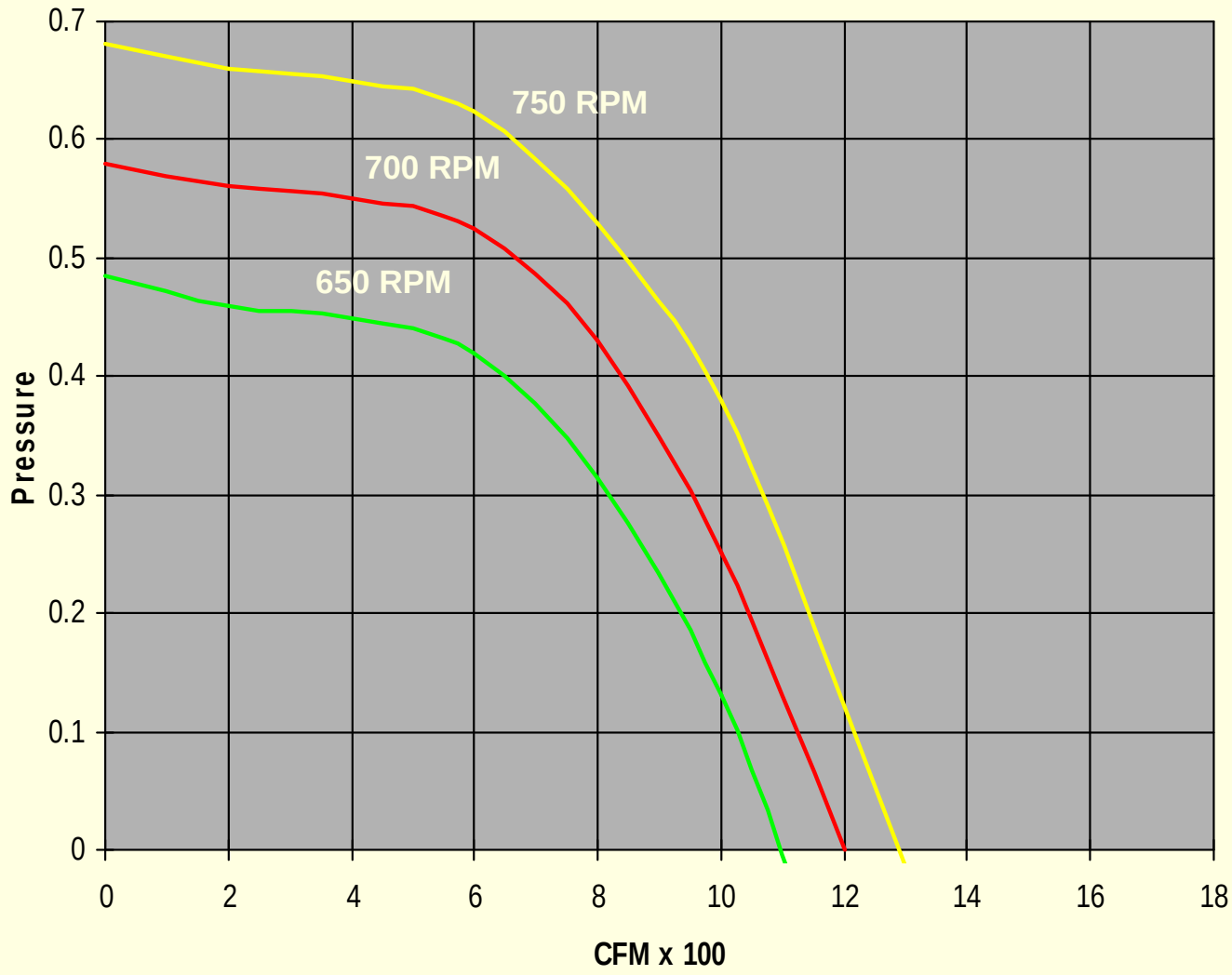

System Resistance Curve

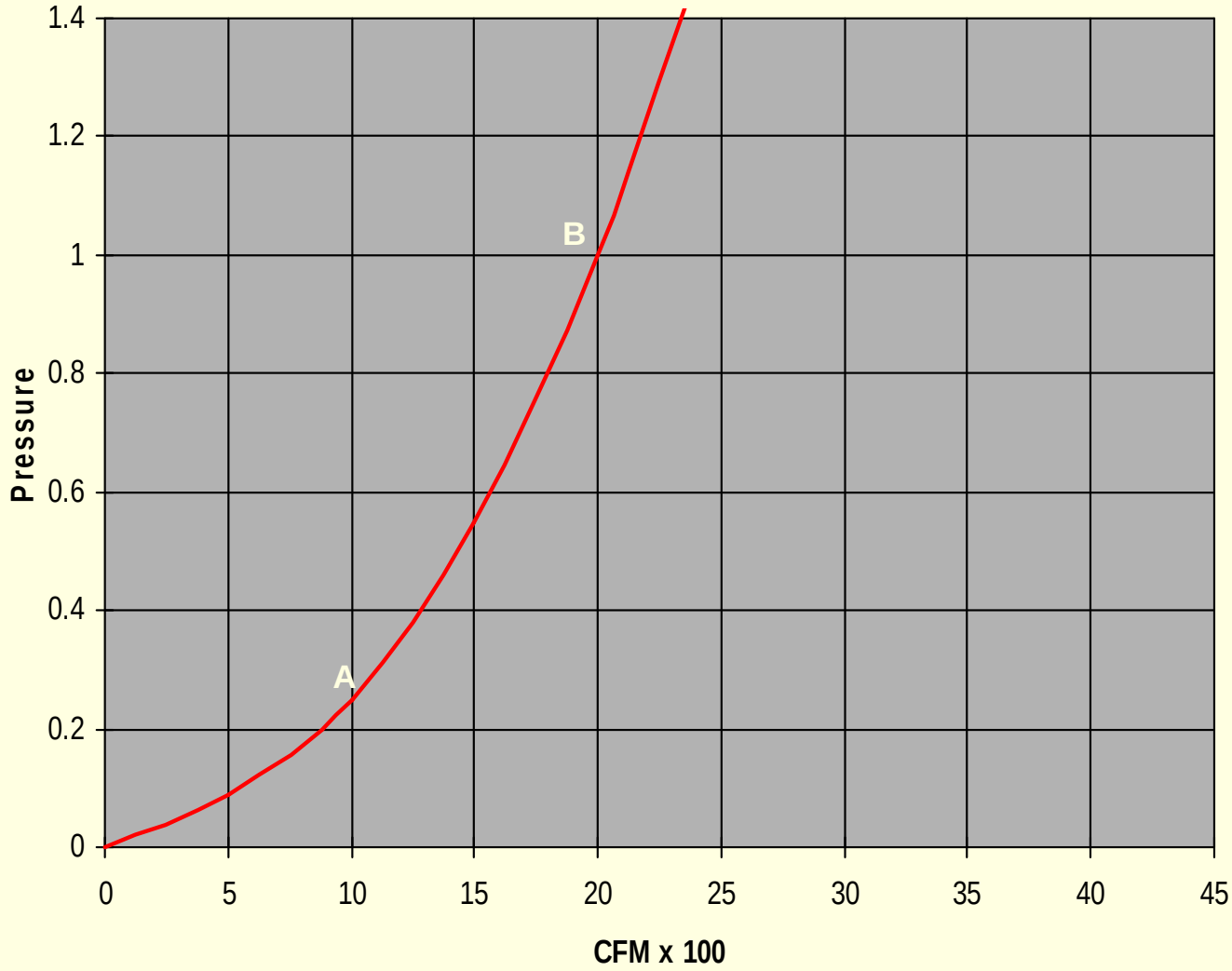

Varying System Resistance Curve

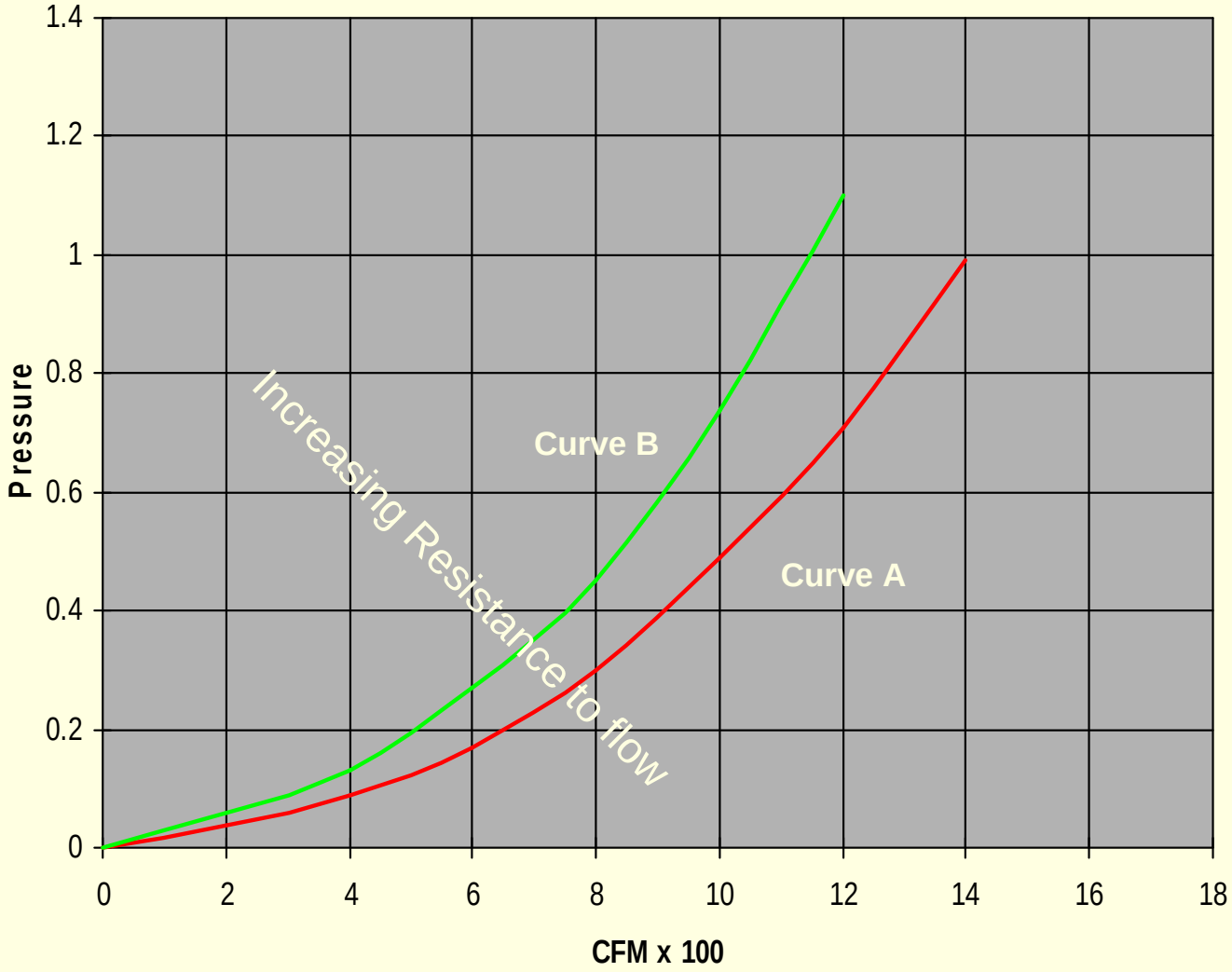

Operating Point

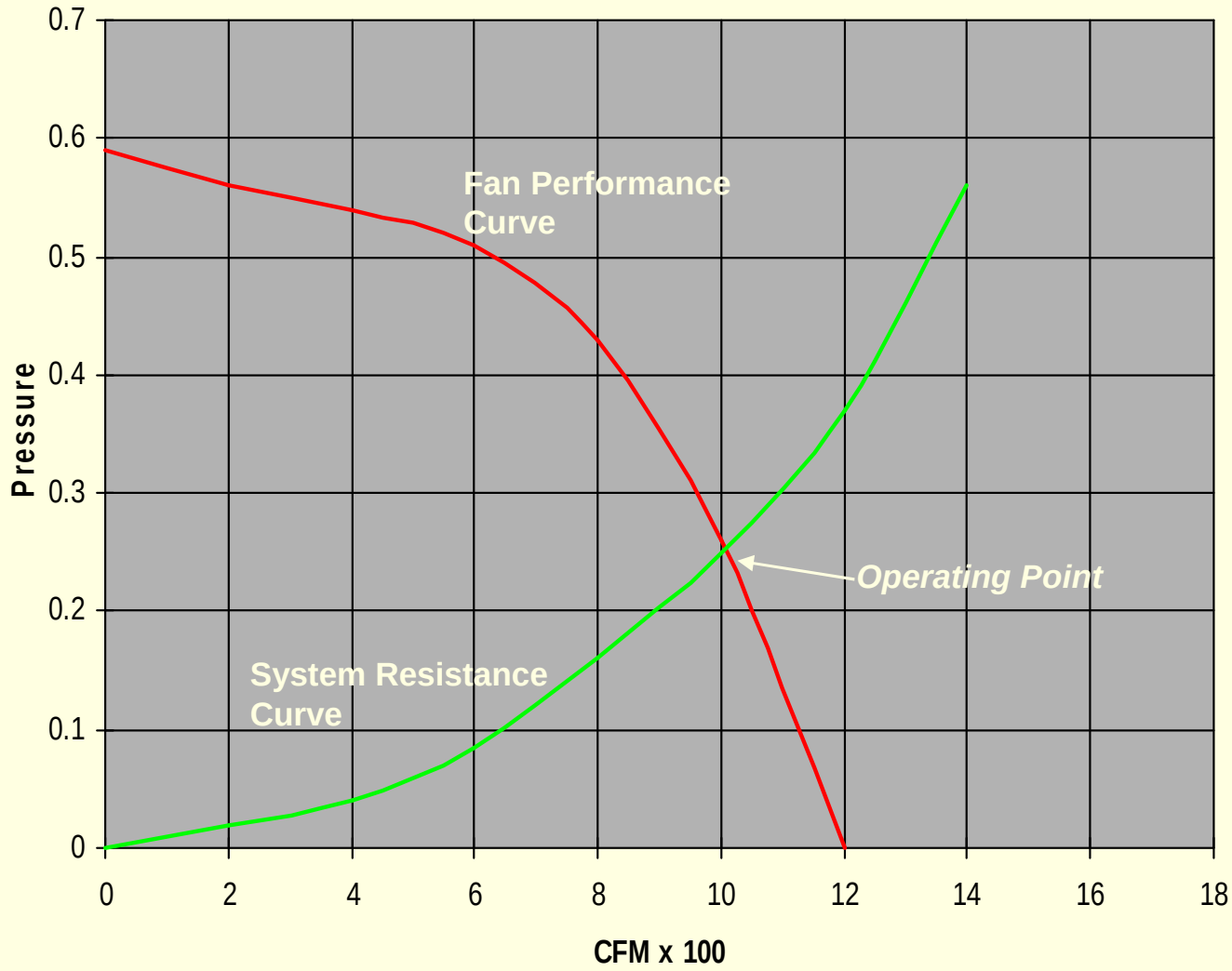

Varying Operating Points

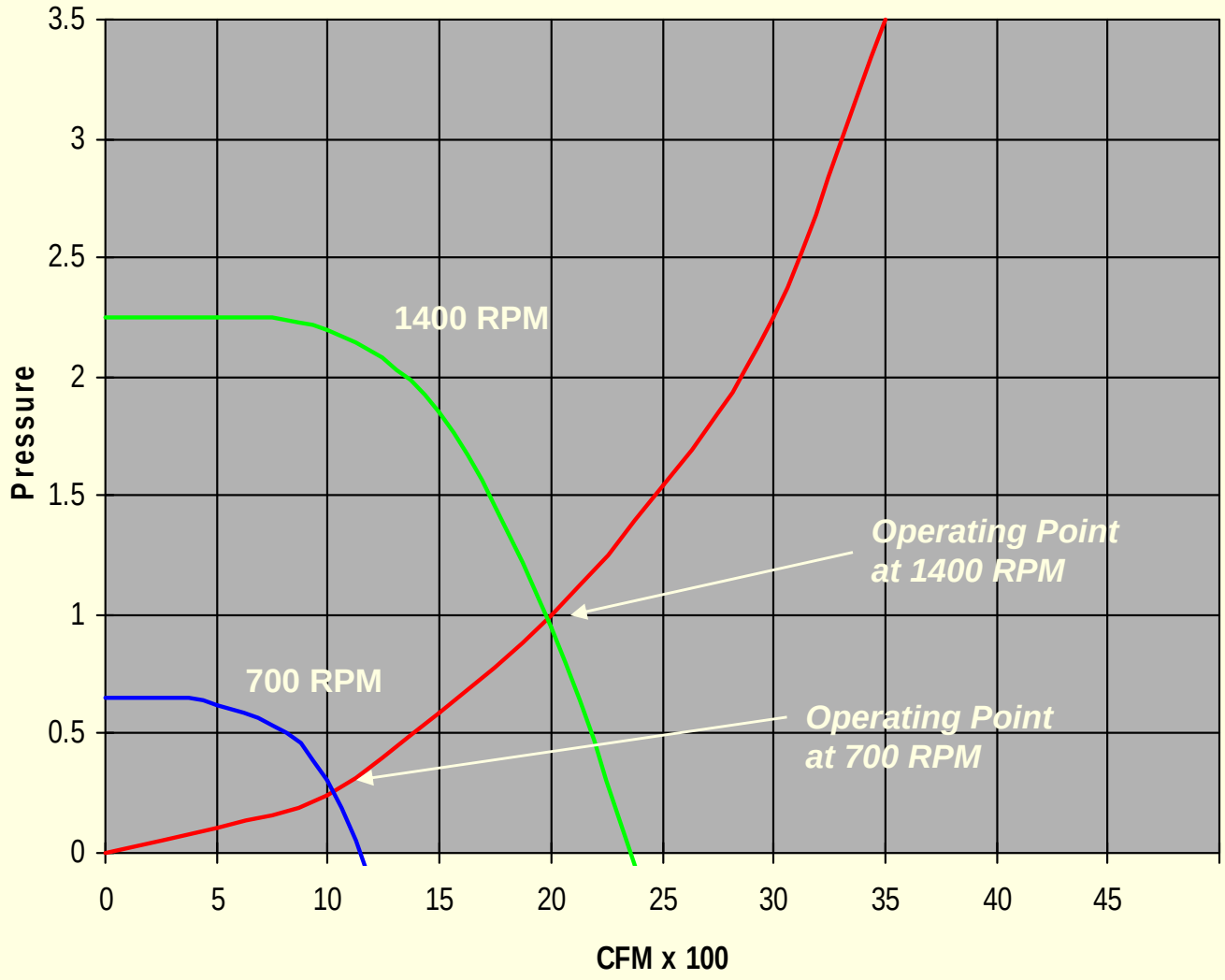

Varying Operating Points - continued

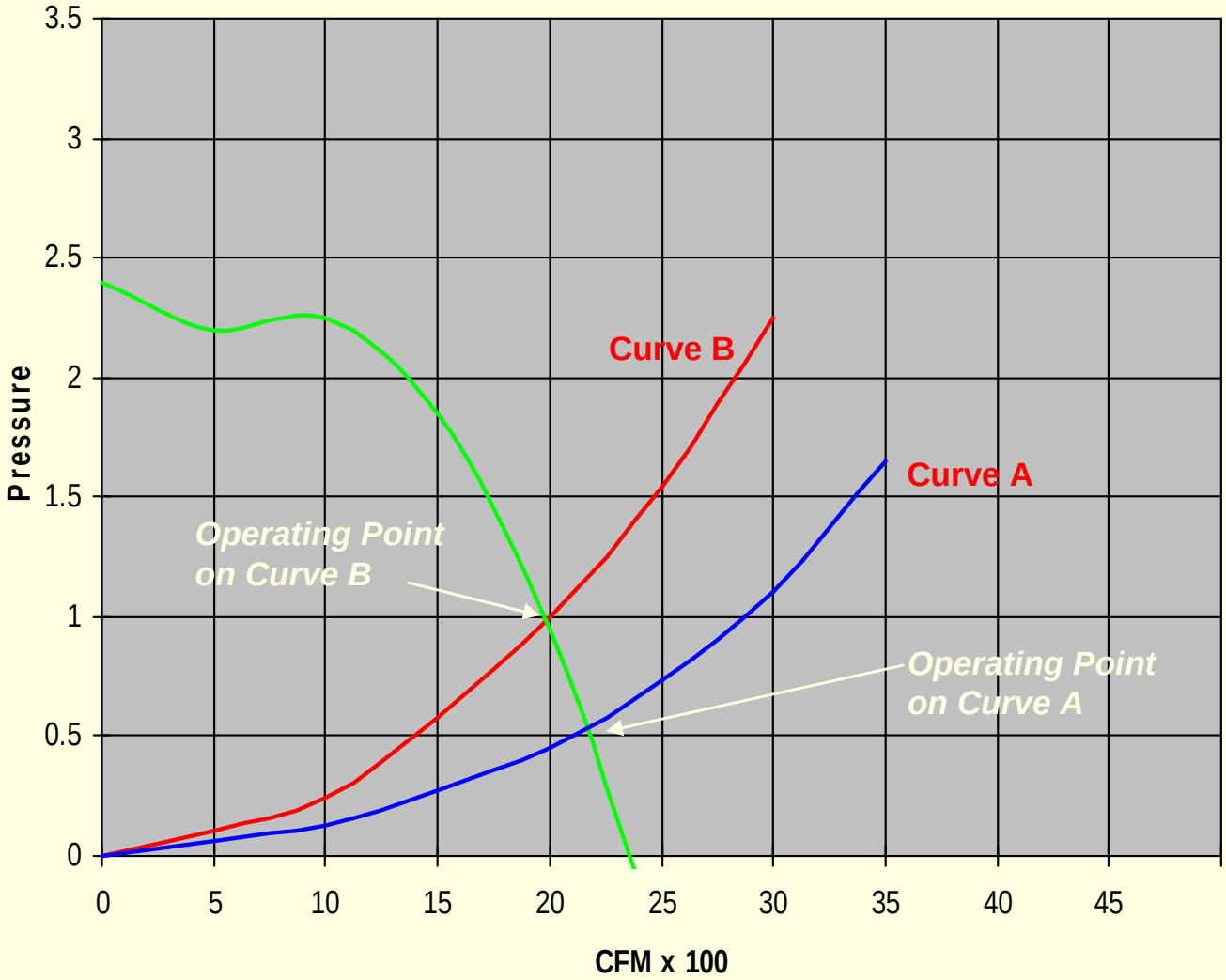

Typical Fan Curve

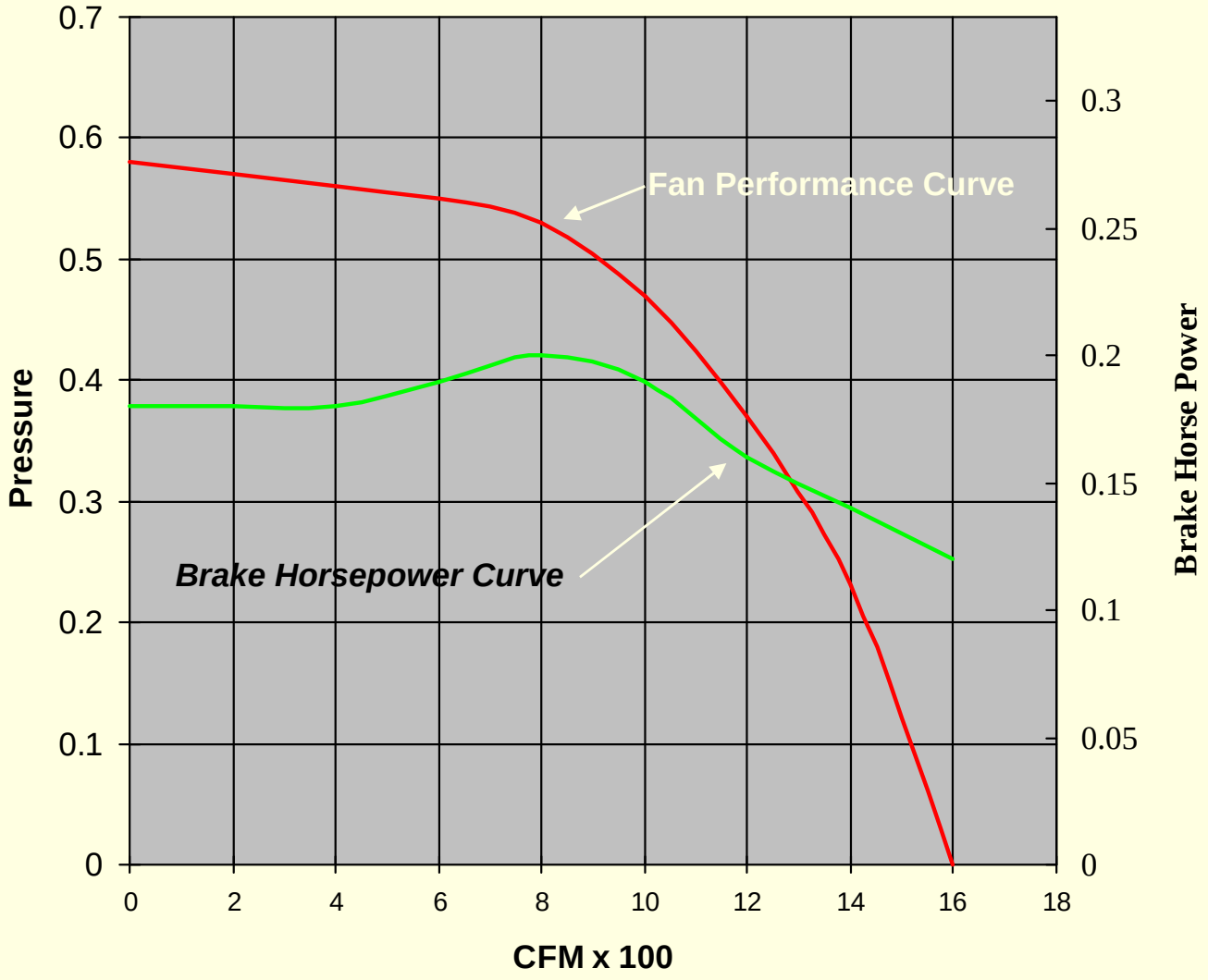

Typical Fan Curve with System

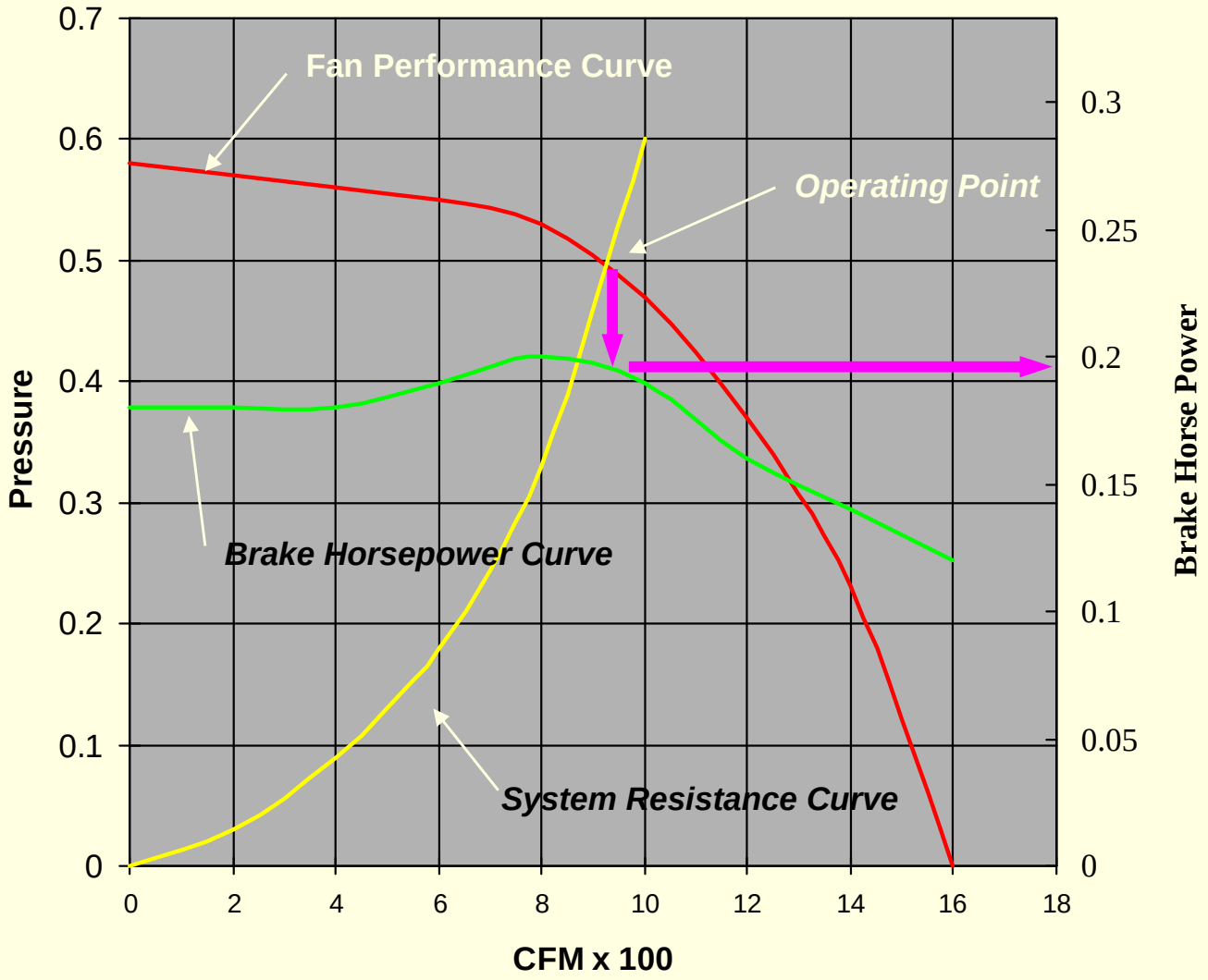

KRÜGER

System Effects



AIR MOVEMENT AND CONTROL ASSOCIATION INTERNATIONAL, INC.

KRÜGER

amca INTERNATIONAL MEMBER

System Effects Defined:

- Anything you place in close proximity before or after the fan that affects the cataloged performance.

KRÜGER

amca INTERNATIONAL MEMBER

Three most common causes of deficient performance of a fan/system are:

- *Improper inlet and outlet conditions*
- *Non-uniform inlet flow*
- *Swirl at the inlet*

KRÜGER

amca INTERNATIONAL MEMBER

Why System Effect is Important

- Can decrease performance
- Can cause excessive vibration
- Can cause excessive noise
- Can require more energy (HP) to achieve rated performance
- Takes time to determine and understand

OUTLET

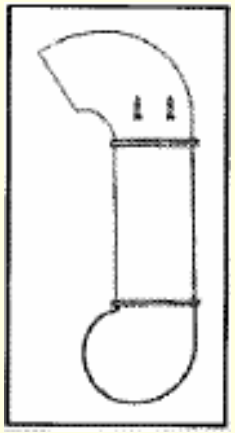

V_P = 1"



V_P = 0.85"

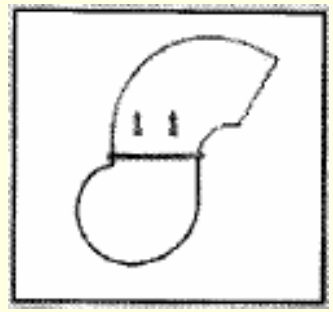

V_P = 0.7"

Velocity Pressure	Velocity (fpm)	Q(%)	N rpm(%)	N' rpm(%)	Power (kW) Increased (%)
1.00"	4005	100	100	100	-
0.85"	3692	92.2	100	108 (100/92.2)	26 $(1.08)^3$
0.70"	3350	83.6	100	120 (100/83.6)	73 $(1.20)^3$

Note: 1) N' = New fan speed to achieve design capacity

2) Velocity Pressure = $(V/4005)^2$inch-wg.

V = fpm

3) Fan law

$P1 / P2 = (N1/N2)^3$

P = Power (kW)

N = Fan speed (rpm)

INLET

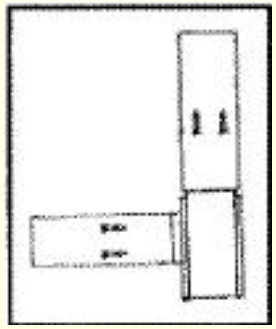

V_P = 1"

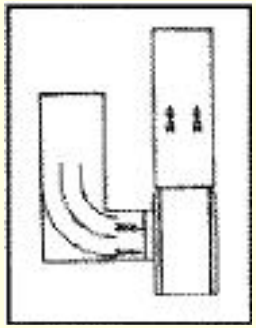

V_P = 0.75"

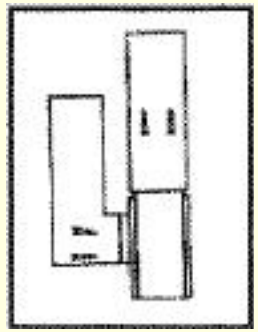

V_P = 0.6"

Velocity Pressure	Velocity (fpm)	Q(%)	N rpm(%)	N' rpm(%)	Power (kW) Increased (%)
1.00"	4005	100	100	100	-
0.75"	3468	86.6	100	115 (100/86.6)	52 $(1.15)^3$
0.60"	3102	77.5	100	129 (100/77.5)	115 $(1.29)^3$

Note: 1) N' = New fan speed to achieve design capacity

2) Velocity Pressure = $(V/4005)^2$inch-wg.

V = fpm

3) Fan law

$P1 / P2 = (N1/N2)^3$

P = Power (kW)

N = Fan speed (rpm)

Fan Outlet Velocity Profiles

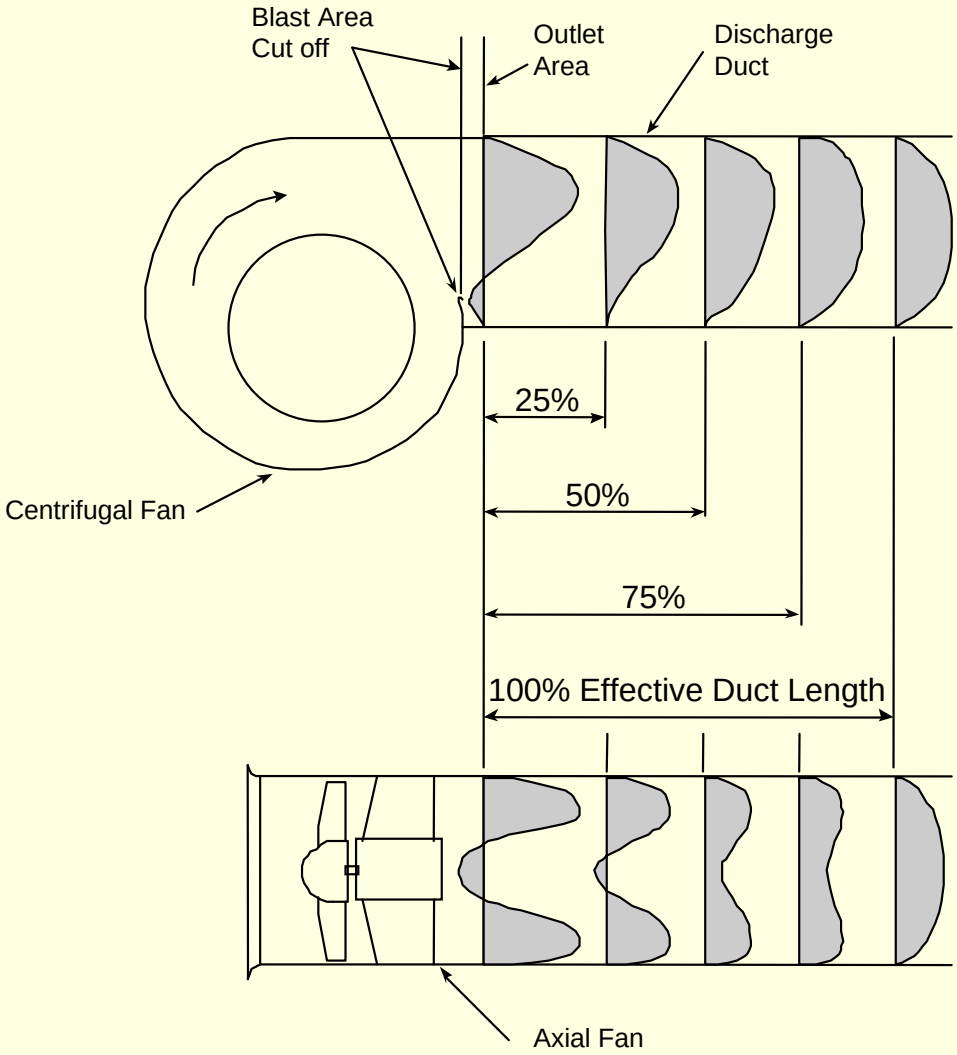

Effective Duct Length

- **Effective Duct Length = 2.5 Duct Diameters for 2,500 FPM or less**
- **Add 1 duct diameter for each additional 1,000 FPM**
- **For rectangular ducts, the equivalent duct diameter is**

$$\sqrt{\frac{4 \times \text{width} \times \text{length}}{\pi}}$$

System Effect Curve

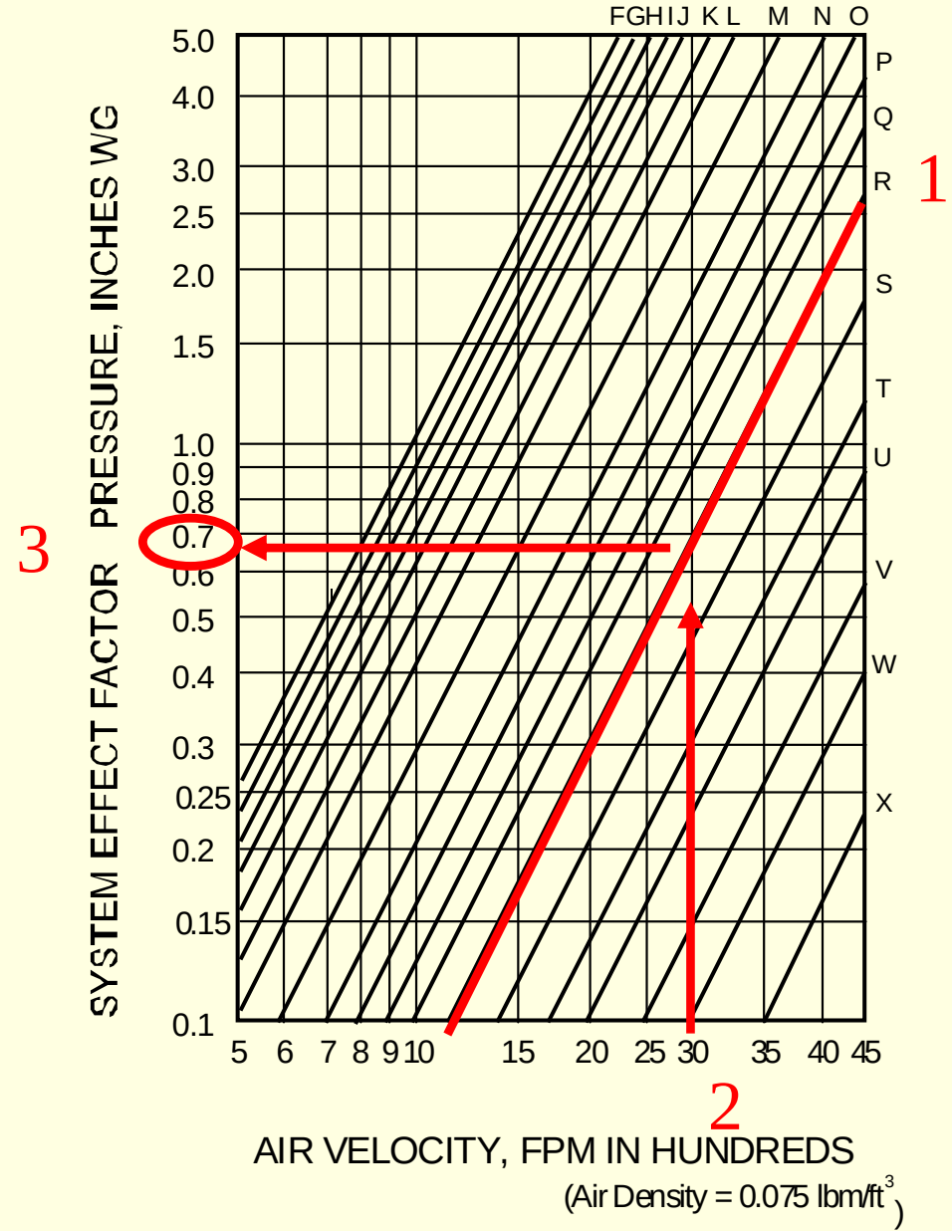

System Effect Curves for Outlet Ducts

- Axial Fans

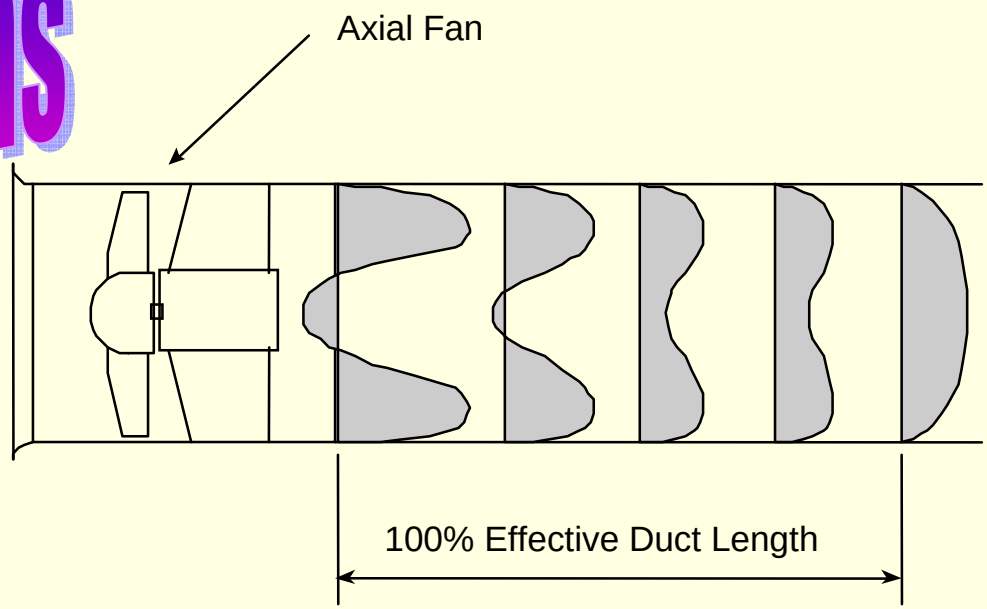

	No Duct	12% Effective Duct	25% Effective Duct	75% Effective Duct	100% Effective Duct
Tubeaxial Fan	--	--	--	--	--
Vaneaxial Fan	U	V	W	--	--

KRÜGER

System Effect Curve

- Axial Fans

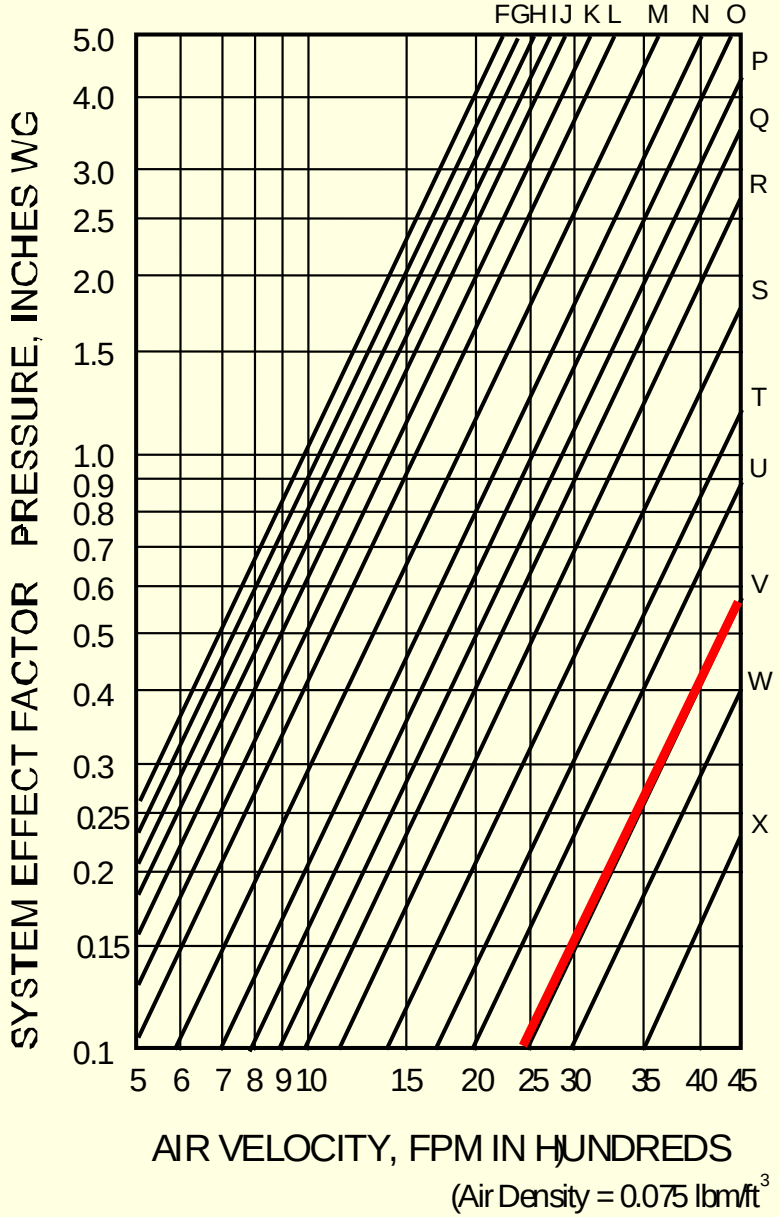

System Effect Curves for Outlet Ducts

- Centrifugal Fans

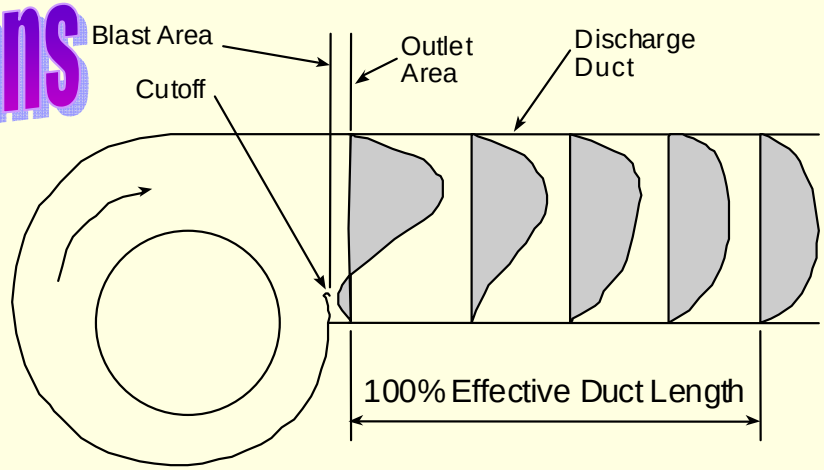

	No Duct	12% Effective Duct	25% Effective Duct	50% Effective Duct	100% Effective Duct
Blast Area / Outlet Area	System Effect Curve				
0.4	P	R-S	U	W	--
0.5	P	R-S	U	W	--
0.6	R-S	S-T	U-V	W-X	--
0.7	S	U	W-X	--	--
0 8	T-U	V-W	X	--	--
0 9	W	W-X	--	--	--
1 0	--	--	--	--	--

Outlet Elbows - Centrifugal Fans

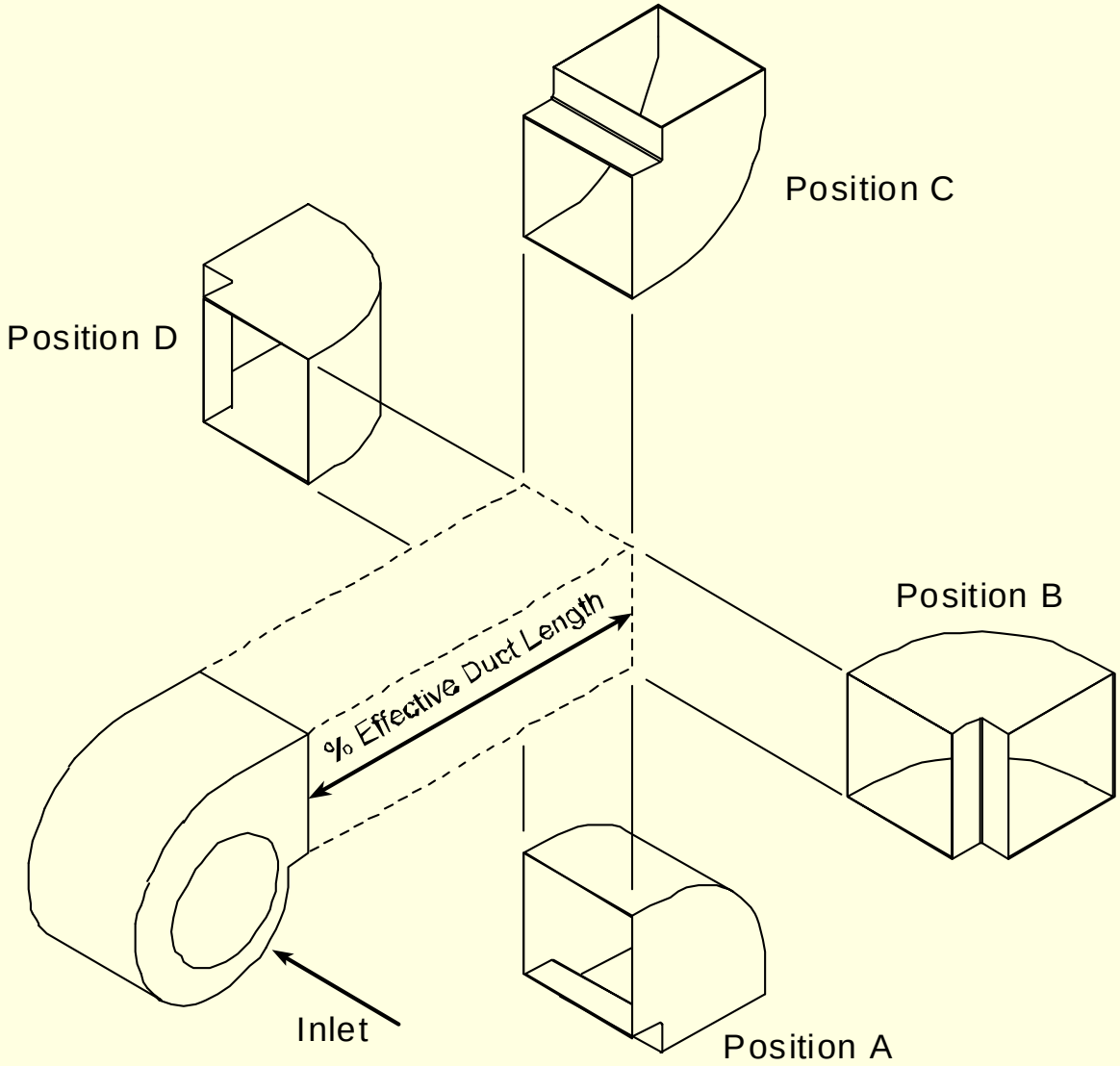

System Effect Curves for SWSI Fans

Blast Area / Outlet Area	Outlet Elbow Position	No Outlet Duct	12% Effective Duct	25% Effective Duct	50% Effective Duct	100% Effective Duct
0.4	A	N	O	P-Q	S	
	B	M-N	N	O-P	R-S	
	C	L-M	M	N	Q	
	D	L-M	M	N	Q	
0.5	A	O-P	P-Q	R	T	
	B	N-O	O-P	Q	S-T	N
	C	M-N	N	O-P	R-S	O
	D	M-N	N	O-P	R-S	
0.6	A	Q	Q-R	S	U	S
	B	P	Q	R	T	Y
	C	N-O	O	Q	S	S
	D	N-O	O	Q	S	T
0.7	A	R-S	S	T	V	E
	B	Q-R	R-S	S-T	U-V	M
	C	P	Q	R-S	T	
	D	P	Q	R-S	T	E
0.8	A	S	S-T	T-U	W	F
	B	R-S	S	T	V	F
	C	Q-R	R	S	U-V	E
	D	Q-R	R	S	U-V	C
0.9	A	T	T-U	U-V	W	T
	B	S	S-T	T-U	W	
	C	R	S	S-T	V	F
	D	R	S	S-T	V	A
1	A	T	T-U	U-V	W	C
	B	S-T	T	U	W	T
	C	R-S	S	T	V	O
	D	R-S	S	T	V	R

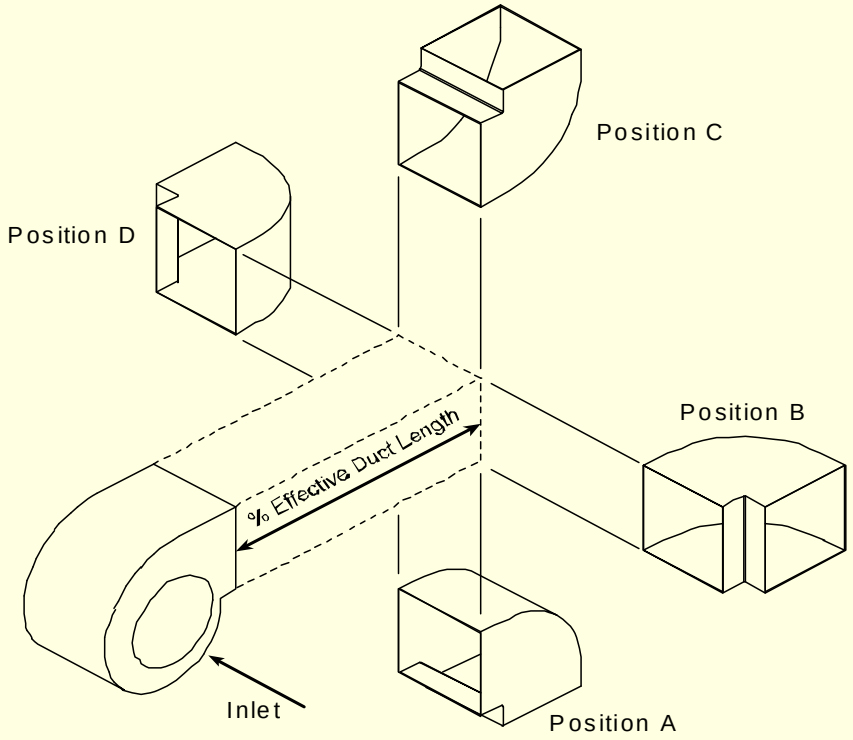

System Effect Curves for Outlet Duct Elbows

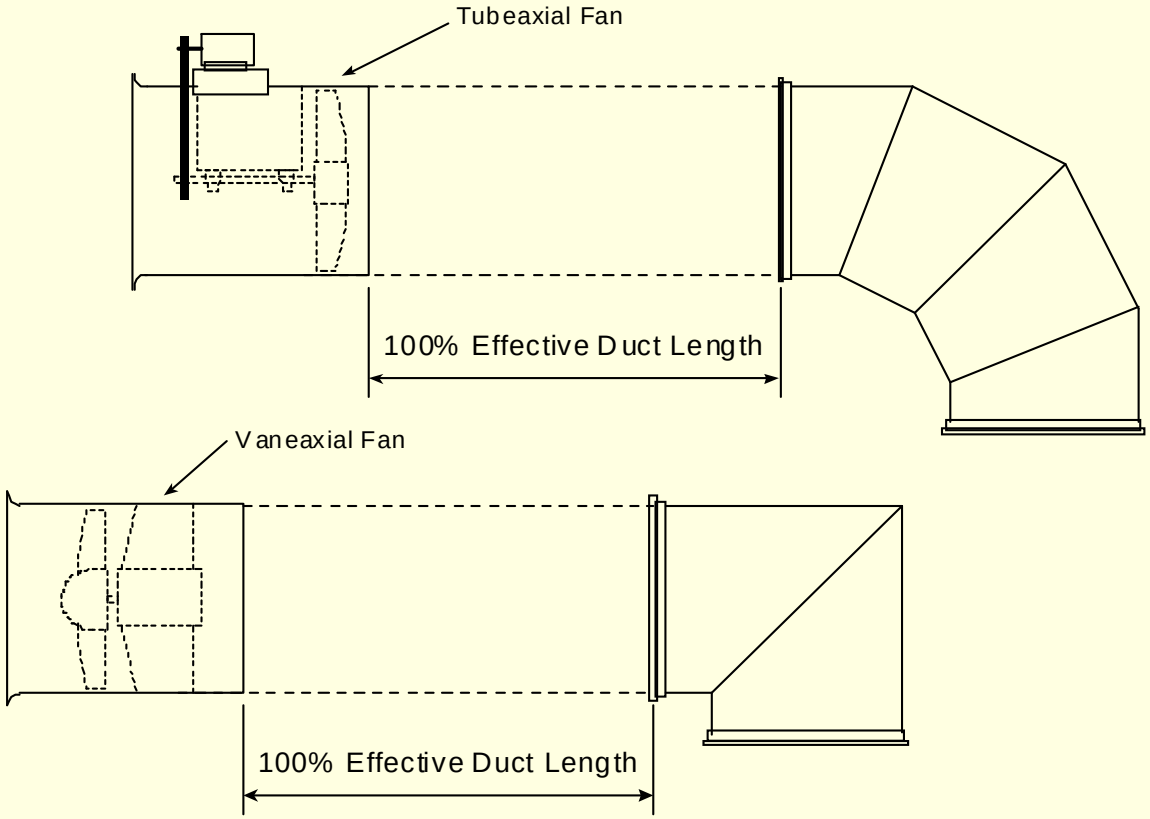

	90° Elbow	No Duct	12% Effective Duct	25% Effective Duct	50% Effective Duct	100% Effective Duct
Tubeaxial Fan	2 & 4 pc.	--	--	--	--	--
Vaneaxial Fan	2 pc.	U	U-V	V	W	--
Vaneaxial Fan	4 pc.	W	--	--	--	--

Determine the effective duct length

Example

Givens:

Centrifugal Fan

3,000 cfm at 1 inch static pressure

13 by 13 inch fan discharge / duct size

9 by 13 inch blast area

12 inch duct length

3,000 cfm / (13 x 13) / 144 = 2556 FPM

Effective duct length = 2.5 (2,500 FPM or less) + 1 duct for every additional 1,000 FPM

Effective duct length = 2.5 + 1 = 3.5 ducts = 3.5 x 14.5 inches = 4 ft

Effective duct length is 4 feet

1 ft of duct length = 25% of the effective length

Blast Area / Outlet Area = (9 x 13) / (13 x 13) = 0.7

System Effect Curves for Outlet Ducts

- Centrifugal Fans

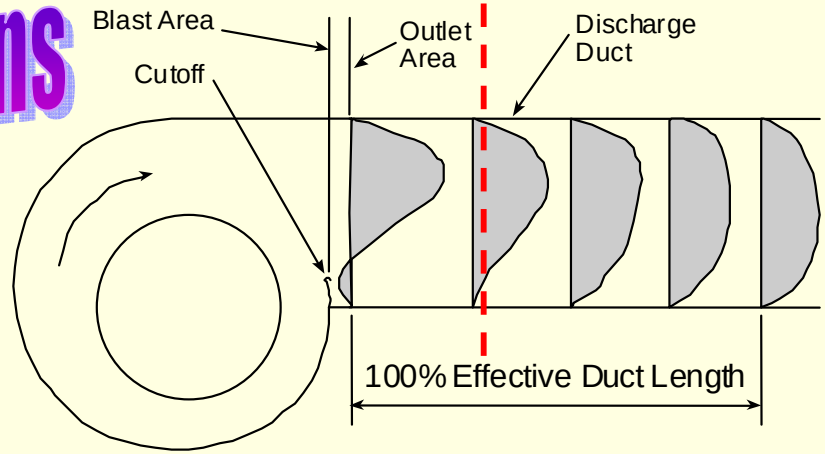

	No Duct	12% Effective Duct	25% Effective Duct	50% Effective Duct	100% Effective Duct
Blast Area / Outlet Area	System Effect Curve				
0.4	P	R-S	U	W	--
0.5	P	R-S	U	W	--
0.6	R-S	S-T	U-V	W-X	--
0.7	S	U	W-X	--	--
0.8	T-U	VW	X	--	--
0.9	W-W	W-X	--	--	--
1.0	--	--	--	--	--

System Effect Curve

- Centrifugal Fans

System Effect Factor (no duct) = 0.65 inches

Less system effect with 25% effective duct length

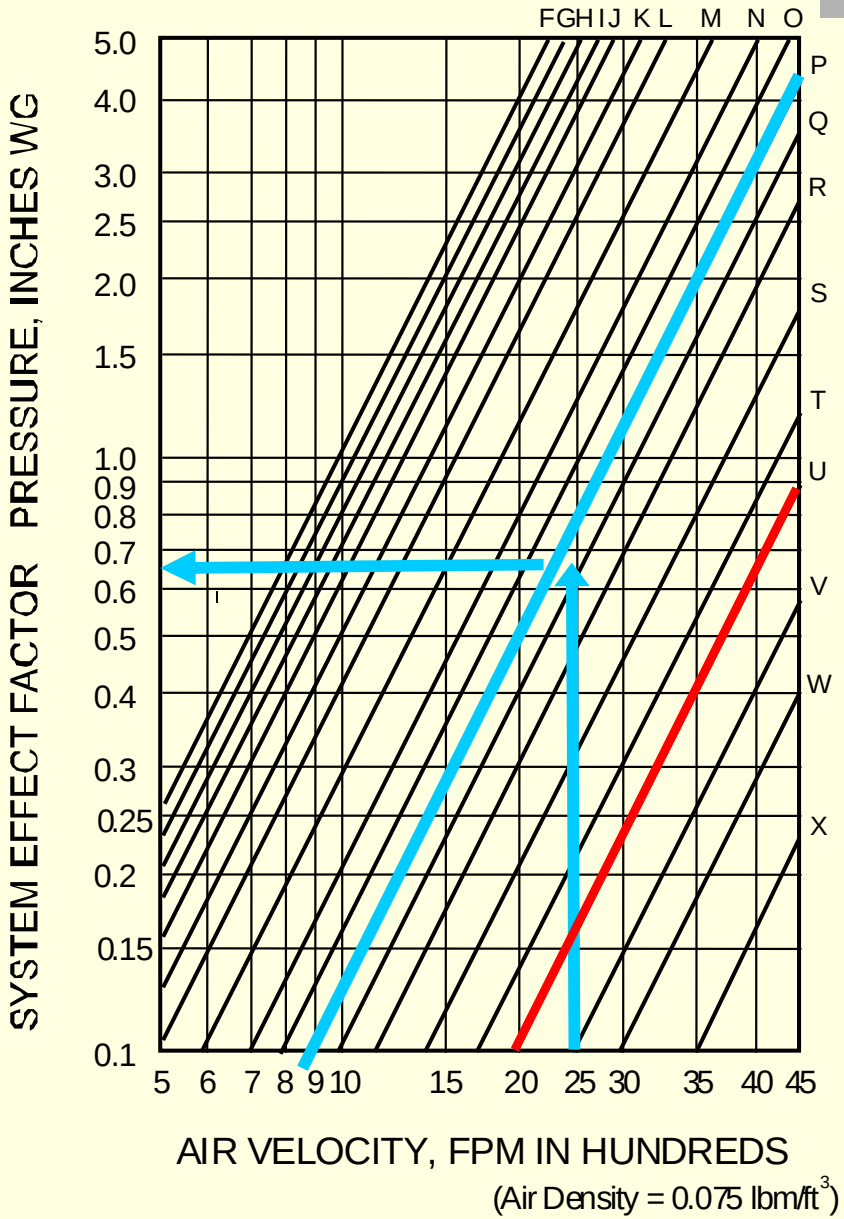

Inlet Conditions

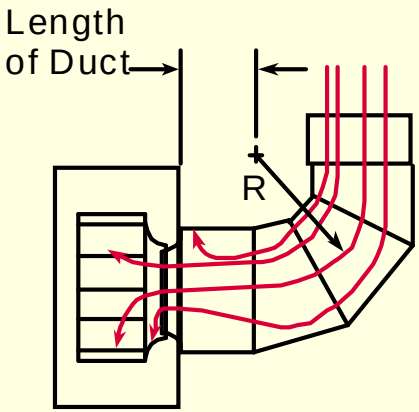

Inlet with 3-piece elbow

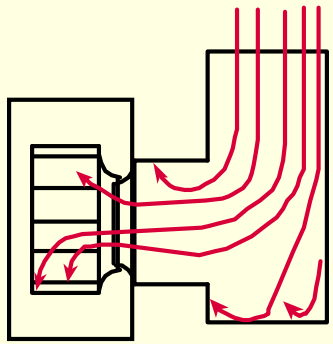

Inlet with rectangular inlet Duct

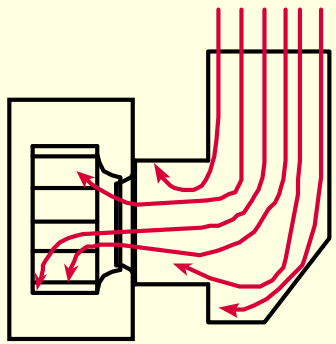

Inlet with special designed inlet box

System Effect on round inlet ducts

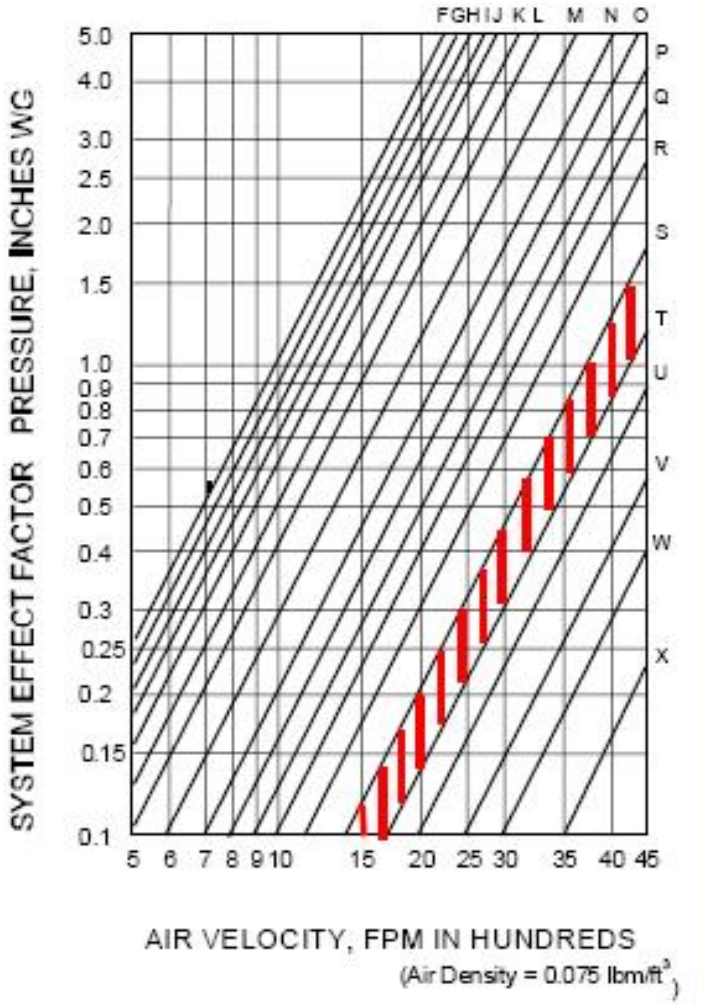

System Effect Curves

R/D	No Duct	2D Duct	5D Duct
--	N	P	R-S

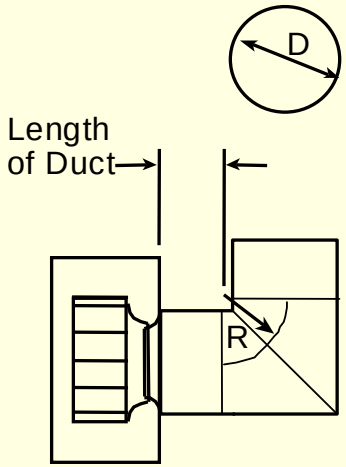

2 piece mitered round section

System Effect Curves

R/D	No Duct	2D Duct	5D Duct
0.5	O	Q	S
0.75	Q	R-S	T-U
1.0	R	S-T	U-V
2.0	R-S	T	U-V
3.0	S	T-U	V

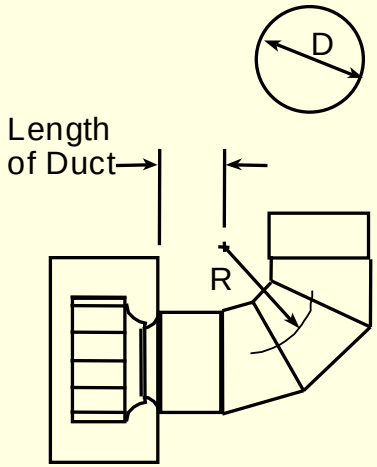

3 piece mitered round section

System Effect Curves

R/D	No Duct	2D Duct	5D Duct
0.5	P-Q	R-S	T
0.75	Q-R	S	U
1.0	R	S-T	U-V
2.0	R-S	T	U-V
3.0	S-T	U	V-W

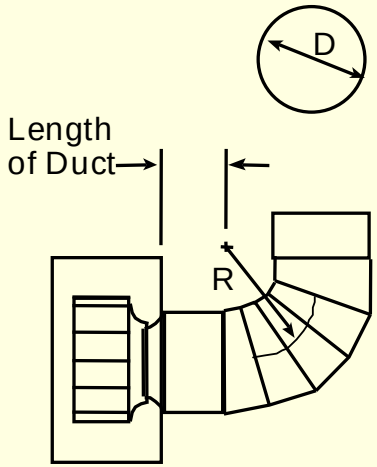

4 or more piece mitered round section

System Effect Curve

Any velocity greater than 1500 fpm would develop a system effect

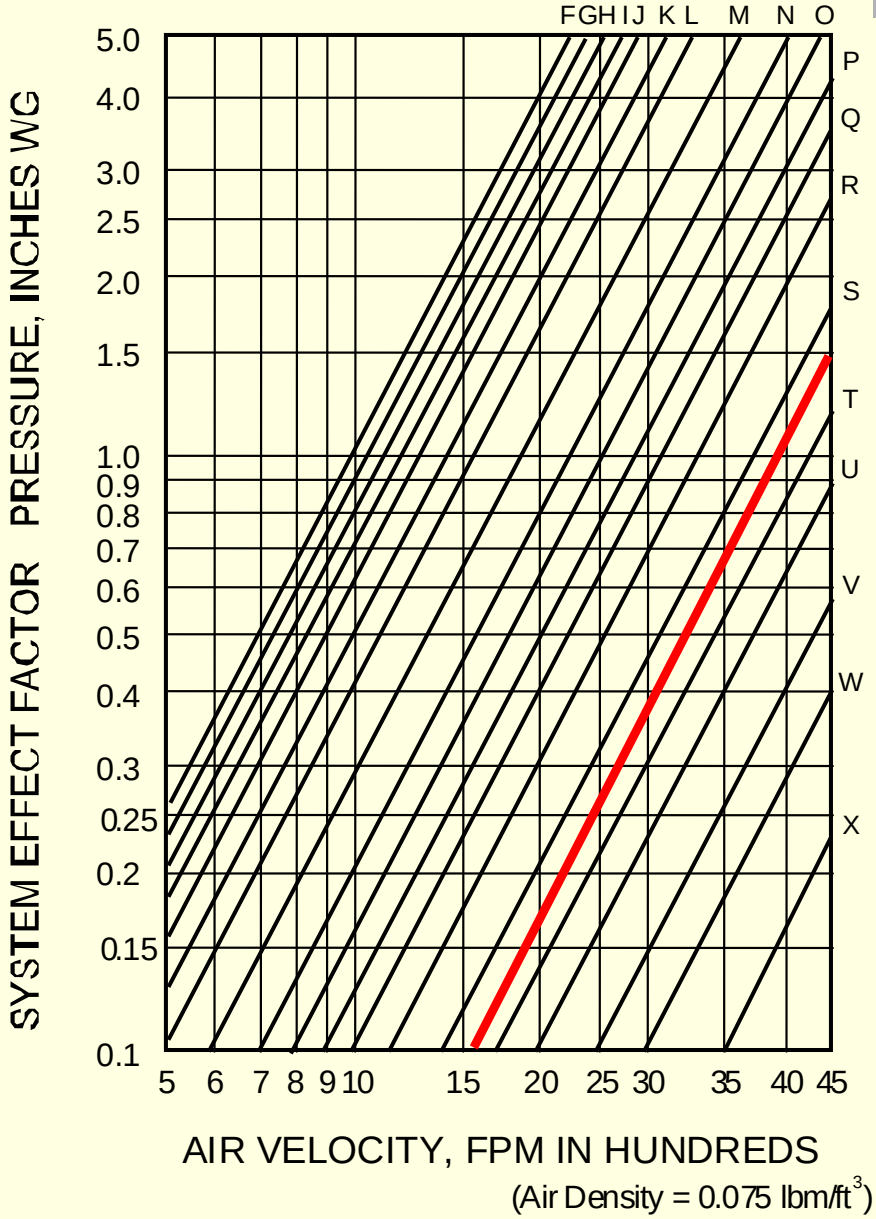

Changing Velocity Profiles when using elbows

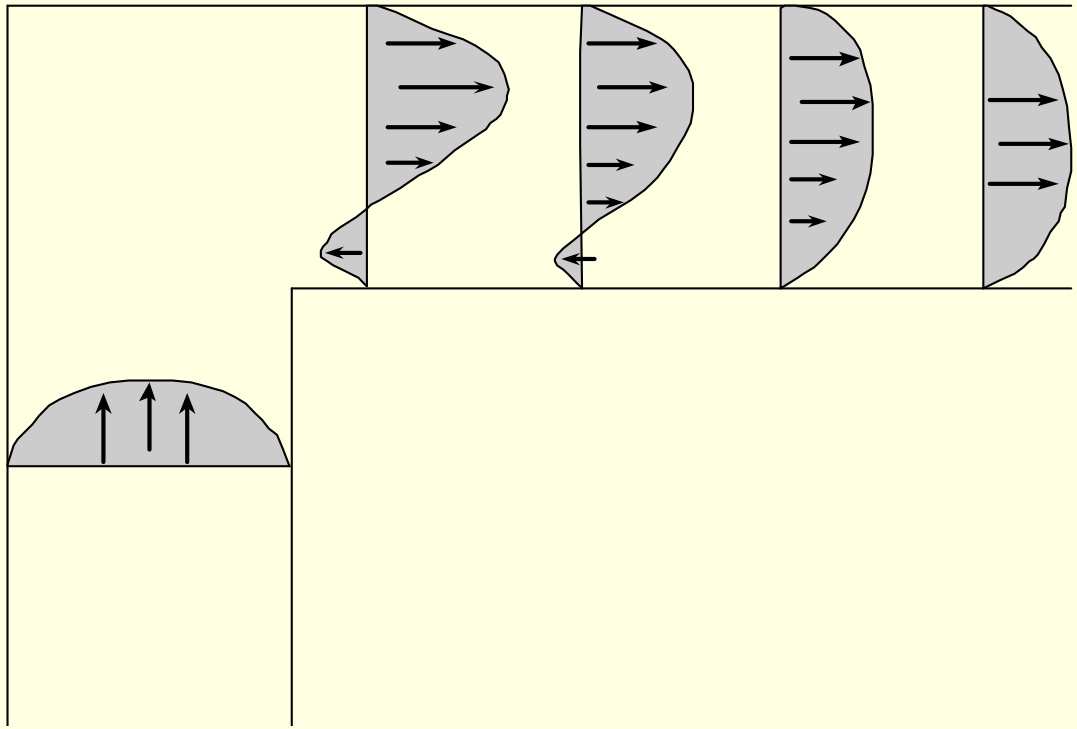

System Effect - Square elbow and turning vanes

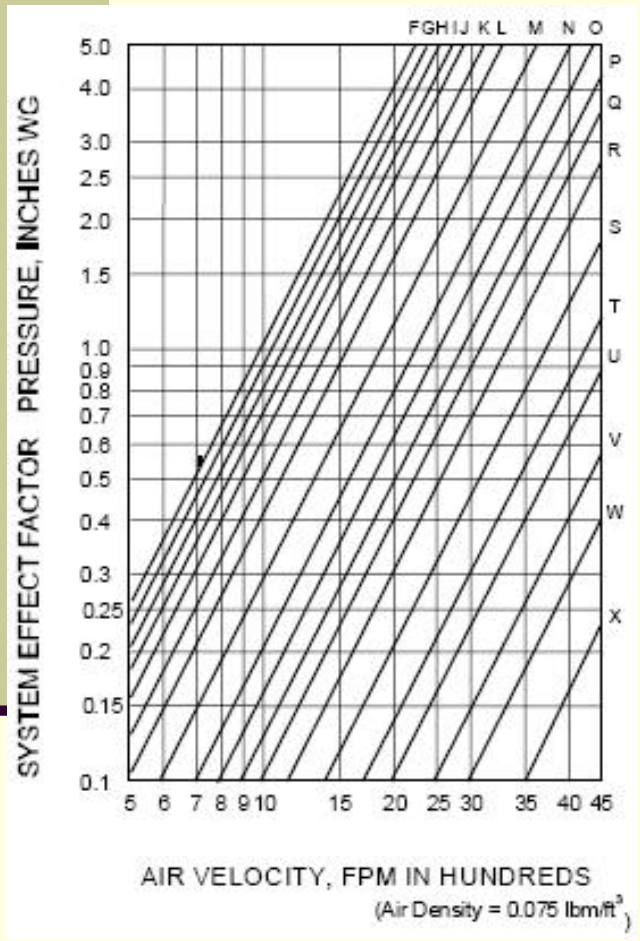

System Effect Curves

R/D	No Duct	2D Duct	5D Duct
0.5	O	Q	S
0.75	P	R	S-T
1.0	R	S-T	U-V
2.0	S	T-U	V

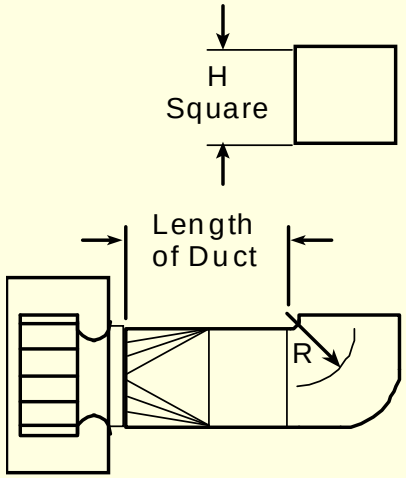

System Effect Curves

R/D	No Duct	2D Duct	5D Duct
0.5	S	T-U	V
1.0	T	U-V	W
2.0	V	V-W	W-X

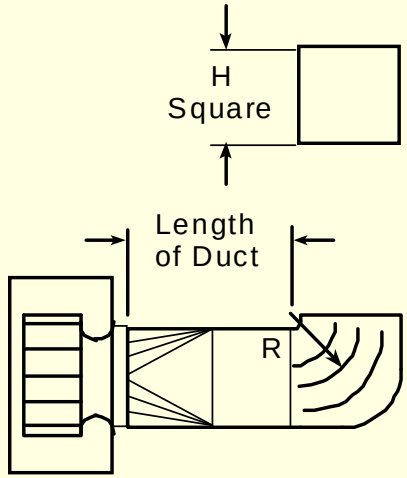

System Effect Curves

R/D	No Duct	2D Duct	5D Duct
0.5	S	T-U	V
1.0	T	U-V	W
2.0	V	V-W	W-X

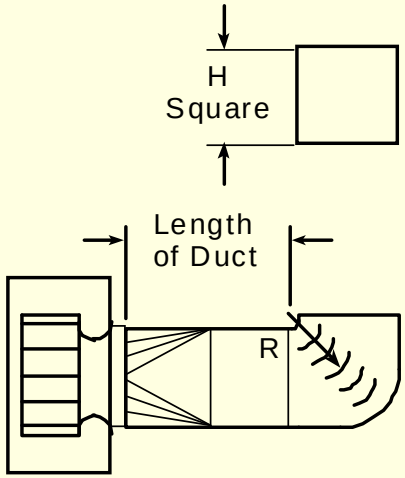

Inlet Swirl

Pre-Rotation

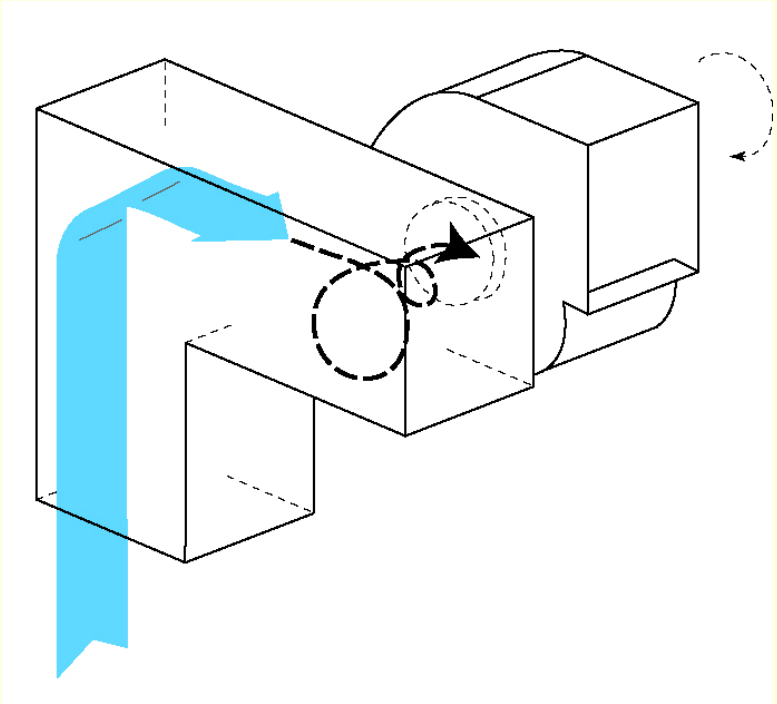

Counter-Rotation

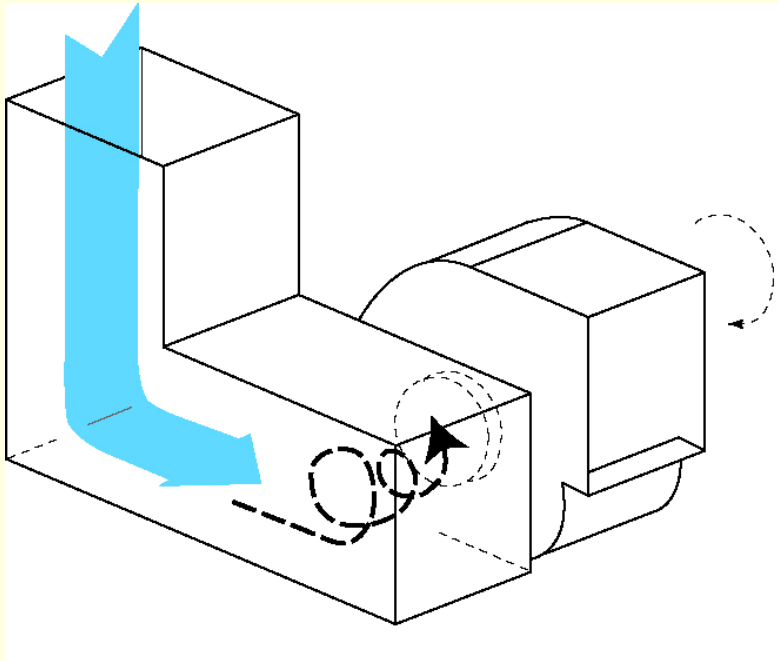

KRÜGER

Best solution for inlet swirl is turning vanes.

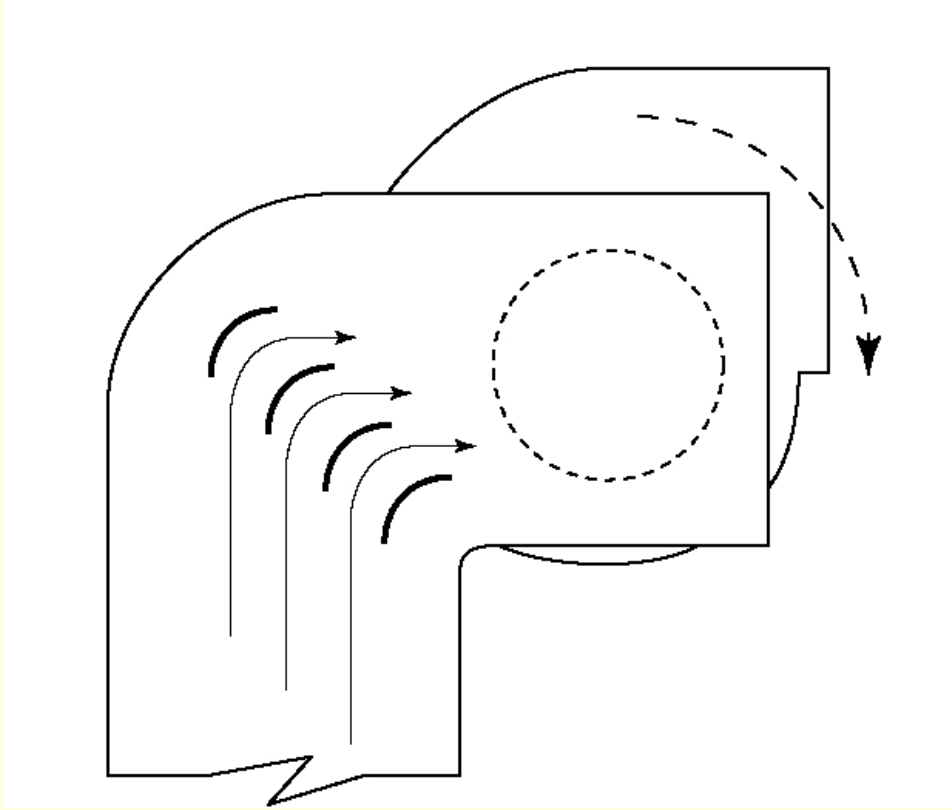

System Curve at Design Point

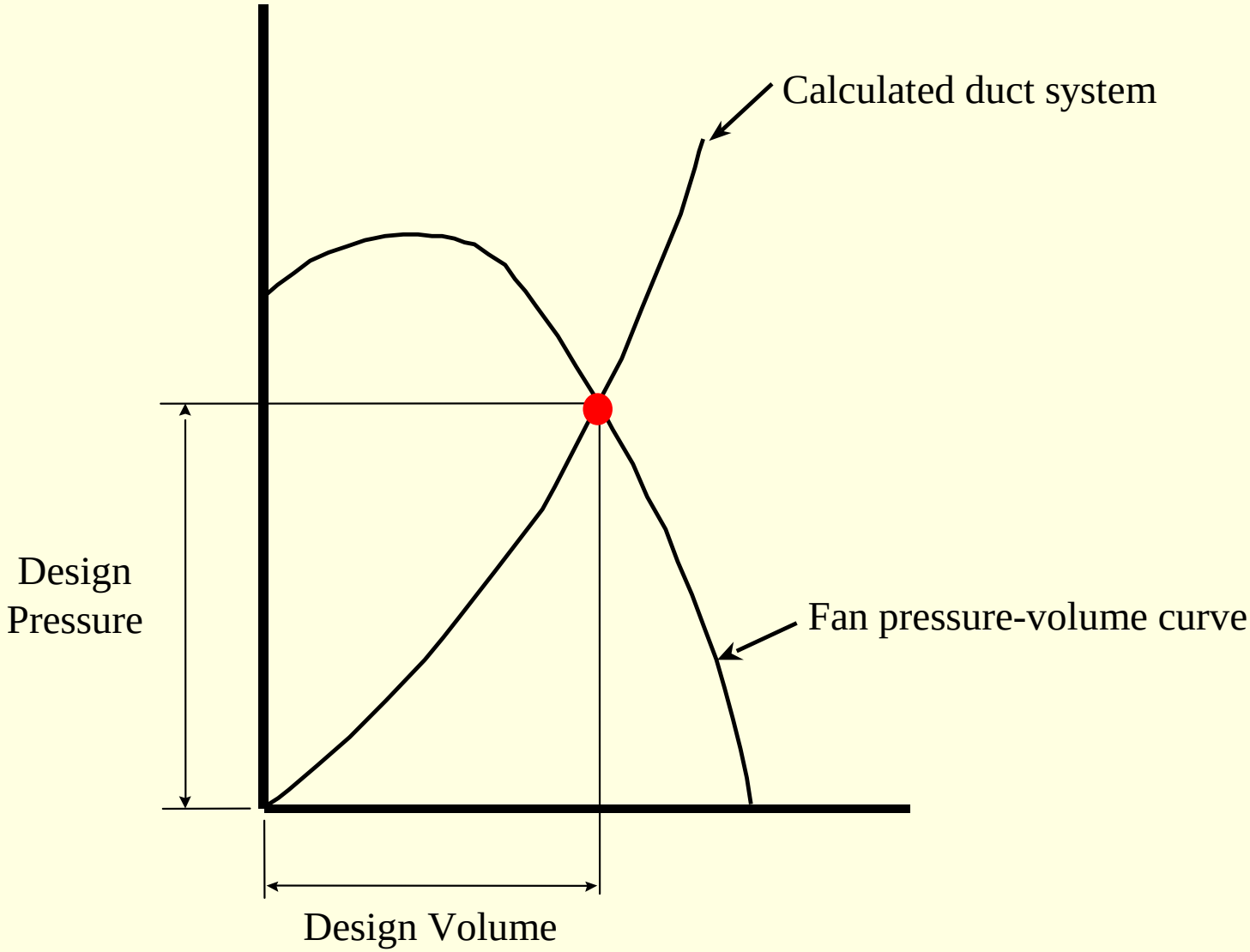

System Effect Ignored

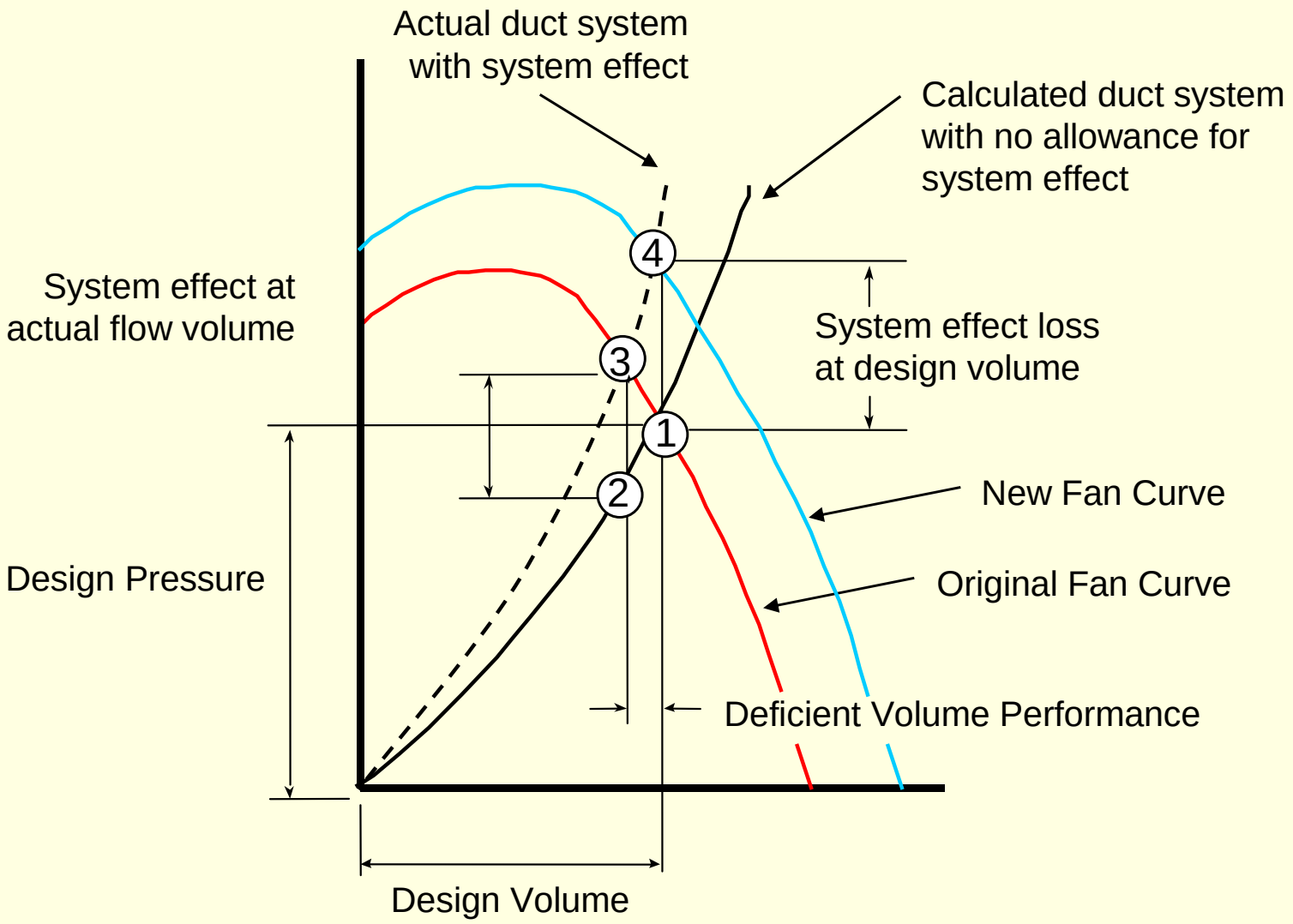

Review

- Minimum 2.5 duct diameters on Outlet
- Minimum 5 to 8 duct diameters on Inlet
- Avoid inlet swirl
  - If any of these general rules are broken, make sure to take system effect into account.

PRESSURE GRADIENTS – Fan as Tested

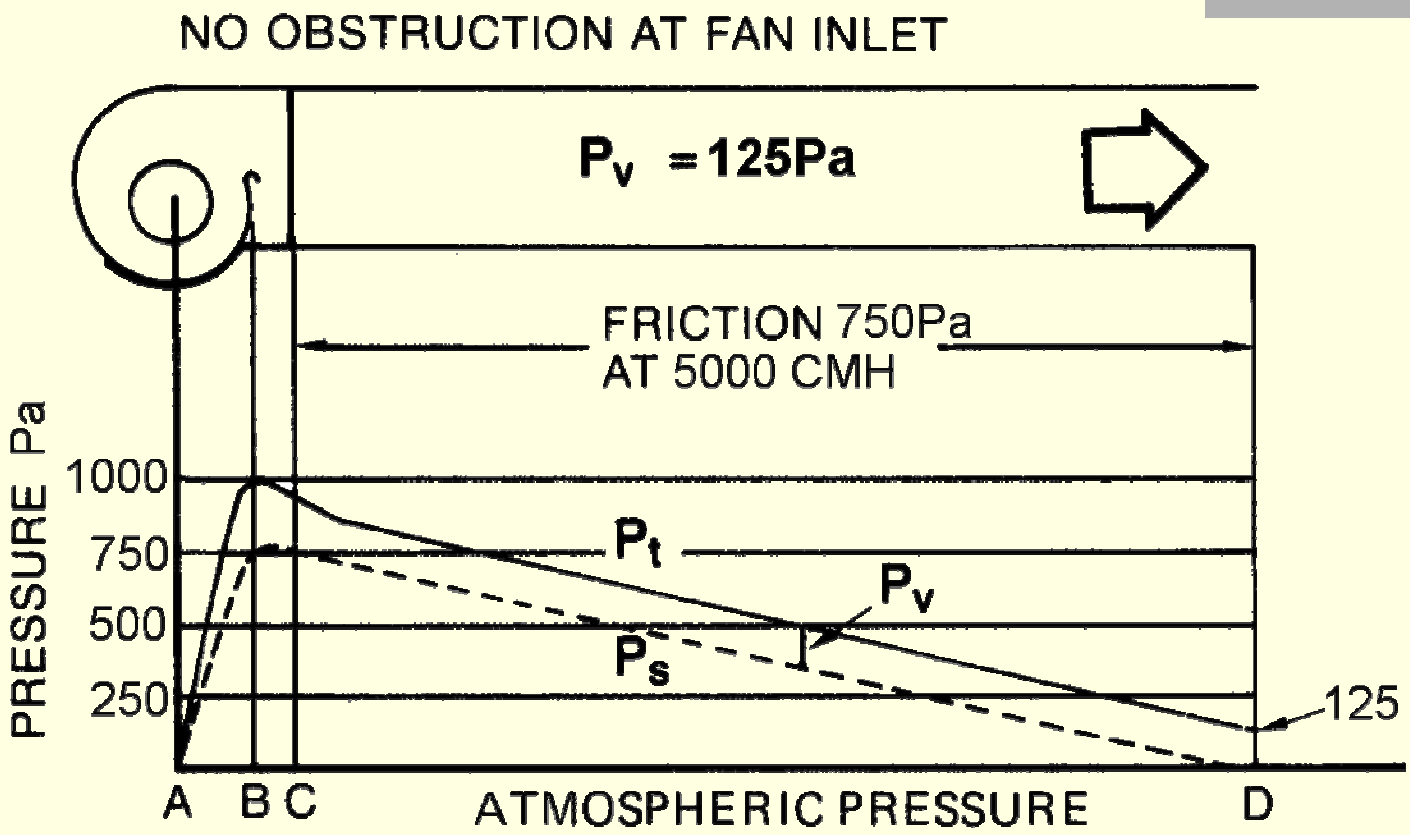

C-D	duct friction	750 Pa (duct design)
A	free inlet	0 Pa (no SEF)
B-C	outlet with straight duct attached for 2 or more dia.	0 Pa (no SEF)

REQUIRED Fan Ps		**750 Pa**

PRESSURE GRADIENTS – Plenum Effect

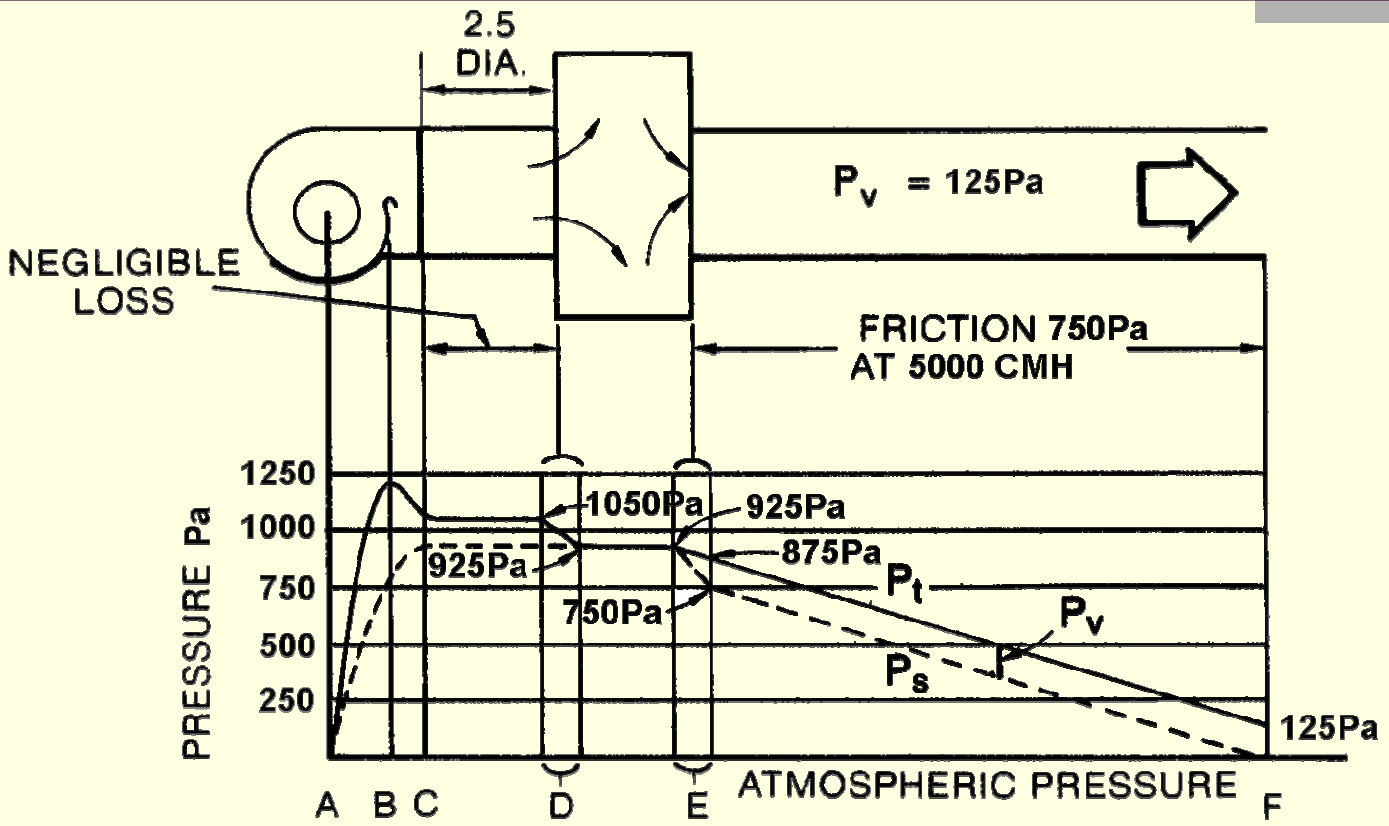

E-F	duct friction at 5000CMH (Q)	750 Pa (duct design)
E	contraction loss-plenum to duct	50 Pa (part of duct system)
E	Ps energy required to create velocity at E	125 Pa (part of duct system)
D	Pv loss (also Pt loss) at D as result of air velocity decrease	0 Pa
	Ps does not change from duct to plenum at D	
C-D	outlet duct on fan as tested	0 Pa

REQUIRED Fan Ps		**925 Pa**

PRESSURE GRADIENTS
– Abrupt Expansion at Fan Outlet

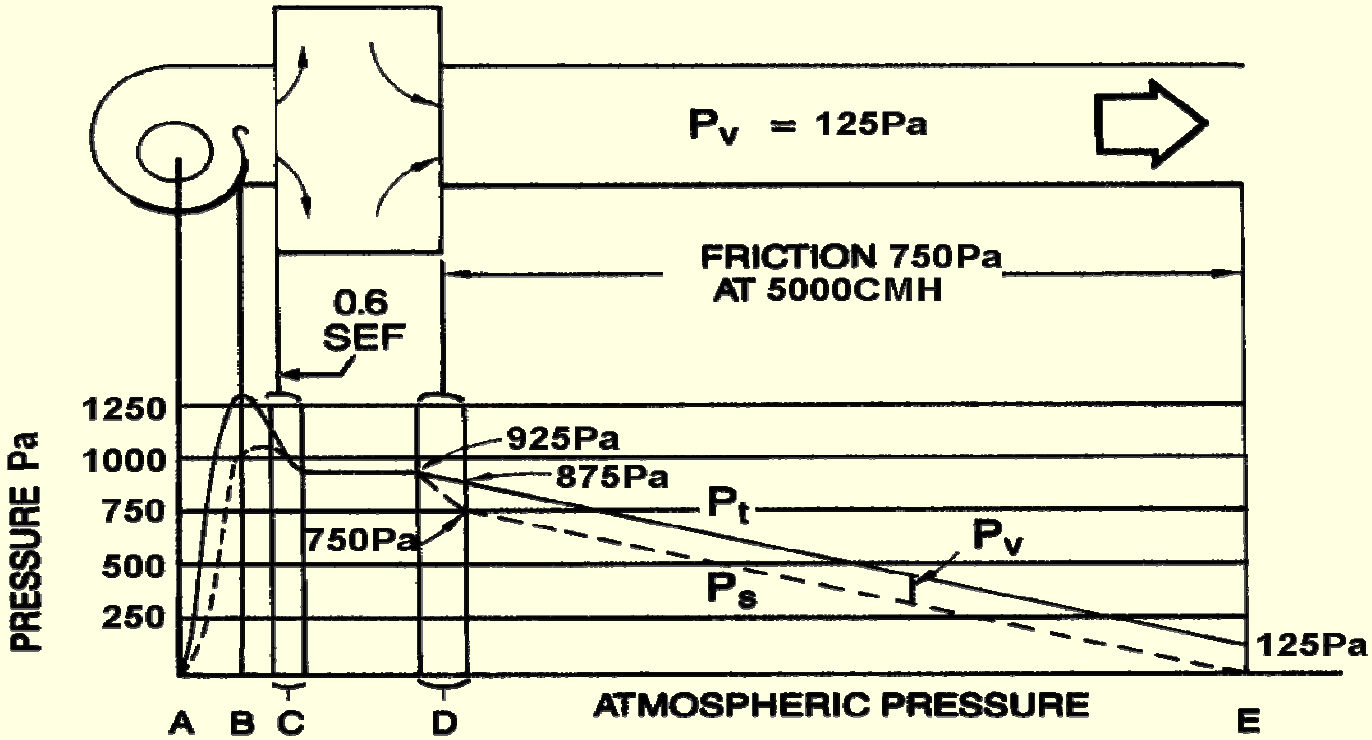

D-E	duct friction at 5000CMH (Q)	750 Pa (duct design)
D	contraction loss-plenum to duct	50 Pa (part of duct system)
D	Ps energy required to create velocity at D	125 Pa (part of duct system)
B-C	SEF	150 Pa
B-C	Pv loss (also Pt loss) at C as result of air velocity decrease Ps does not change from duct to plenum at C	0 Pa
		----------
REQUIRED Fan Ps		**1075 Pa**

PRESSURE GRADIENTS – Exhaust System

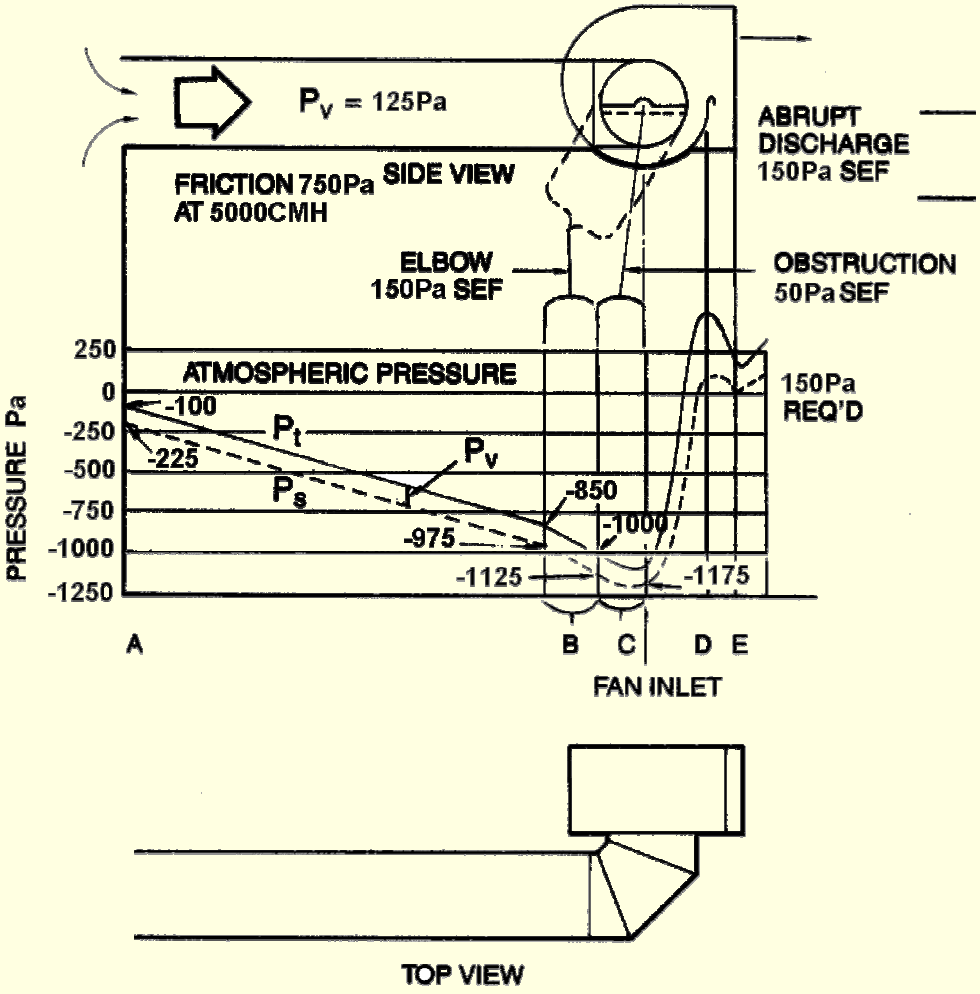

A	Entrance loss-sharp edge duct	100 Pa (duct design)
A-B	Duct friction at 5000CMH	750 Pa (duct design)
B	SEF 1	150 Pa
C	SEF 2	50 Pa
E	Fan Pv	125 Pa
E	SEF 3	150 Pa

REQUIRED Fan Pt		**1325 Pa**

Fan Ps = fan Pt – fan Pv
Fan Ps = 1325 Pa – 125 Pa
Fan Ps = 1200 Pa

Energy conservation strategy

Energy conservation in fan is just a part of the system energy conservation:

1. High efficient fan
2. Wide product range – to meet different operation point
3. Technical support – to ensure a good match of fan and system
4. Proper system design and TAB

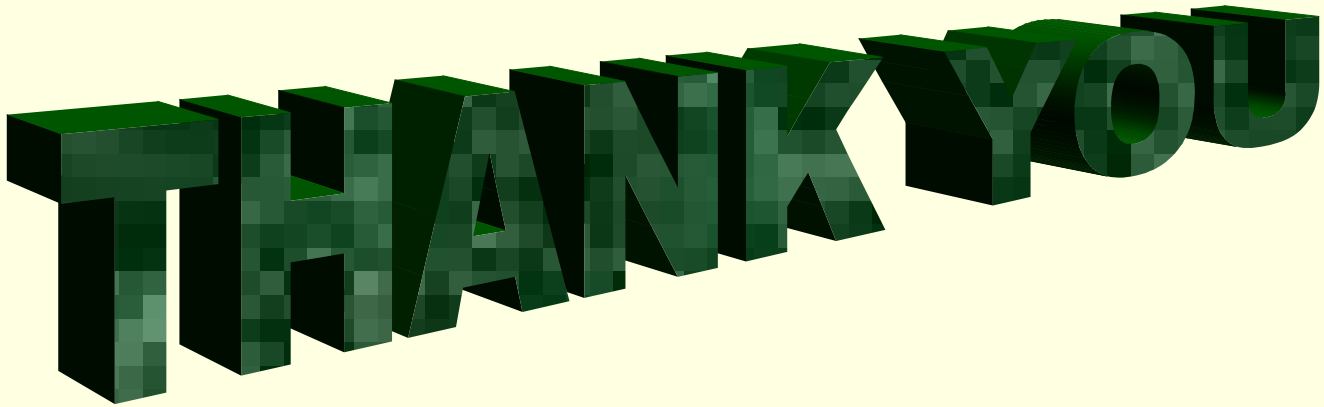
THANK YOU