GRUNDFOS®



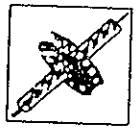

CONTROL OF PUMPING SYSTEMS

1. Pumps and pumping systems

   - speed control of pumps
   - cascade control of pumps

2. Water supply and boosting

   - solutions
   - GRUNDFOS Hydro Maxi booster system
   - GRUNDFOS Hydro Control
   - application examples

3. Pumps in heating and air-condition systems

   - system types
   - GRUNDFOS Delta Control

4. Pump controls of the future

by
Ivan Knudsen,
Product Line Manager
Controls and Electronics

The Centrifugal Pump

Most important data:

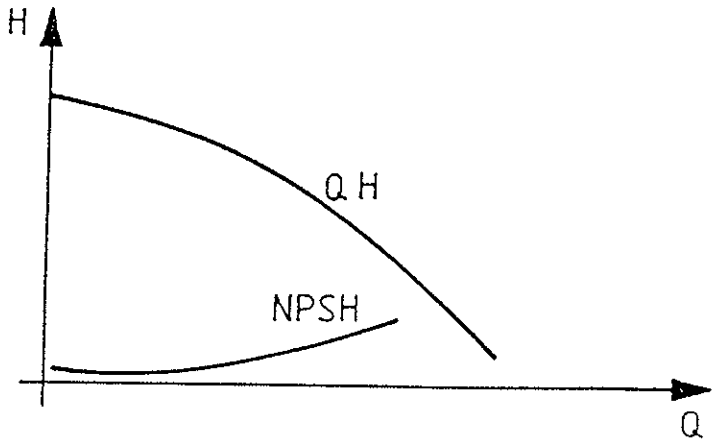

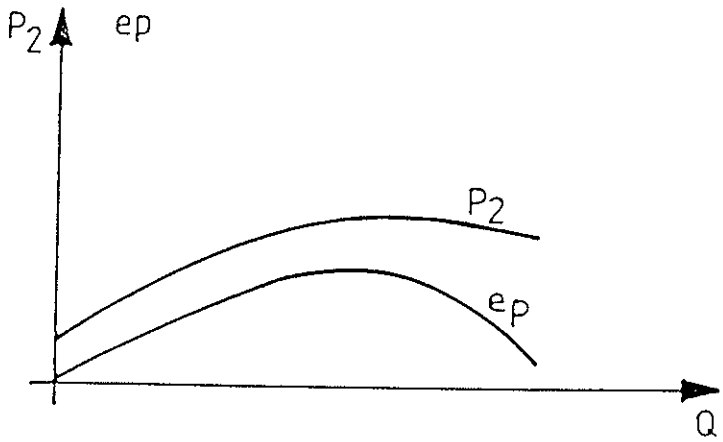

H: Head (m)

Q: Flow m3/h

NPSH: Net Positive Suction Head (m)

P2: Supplied power (pump part) (W)

eP: Pump efficiency

The Centrifugal Pump

Power and efficiency:

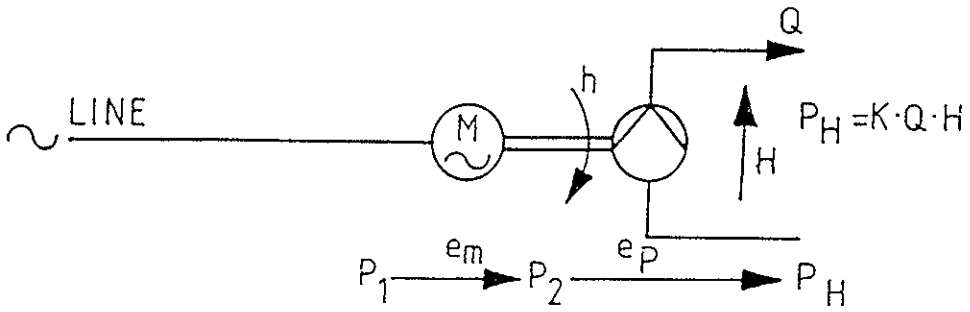

- For pumps we usually state curves for supplied power (P_2) and efficiency (e_P) for the pump only.

- To find the total efficiency the motor efficiency must be added.

- Typical values of a pump with a 5,5 kW motor:

Motor efficiency:	0,80
Pump efficiency:	0,70
Total (0,80-0,70):	0,56

Example of pump data

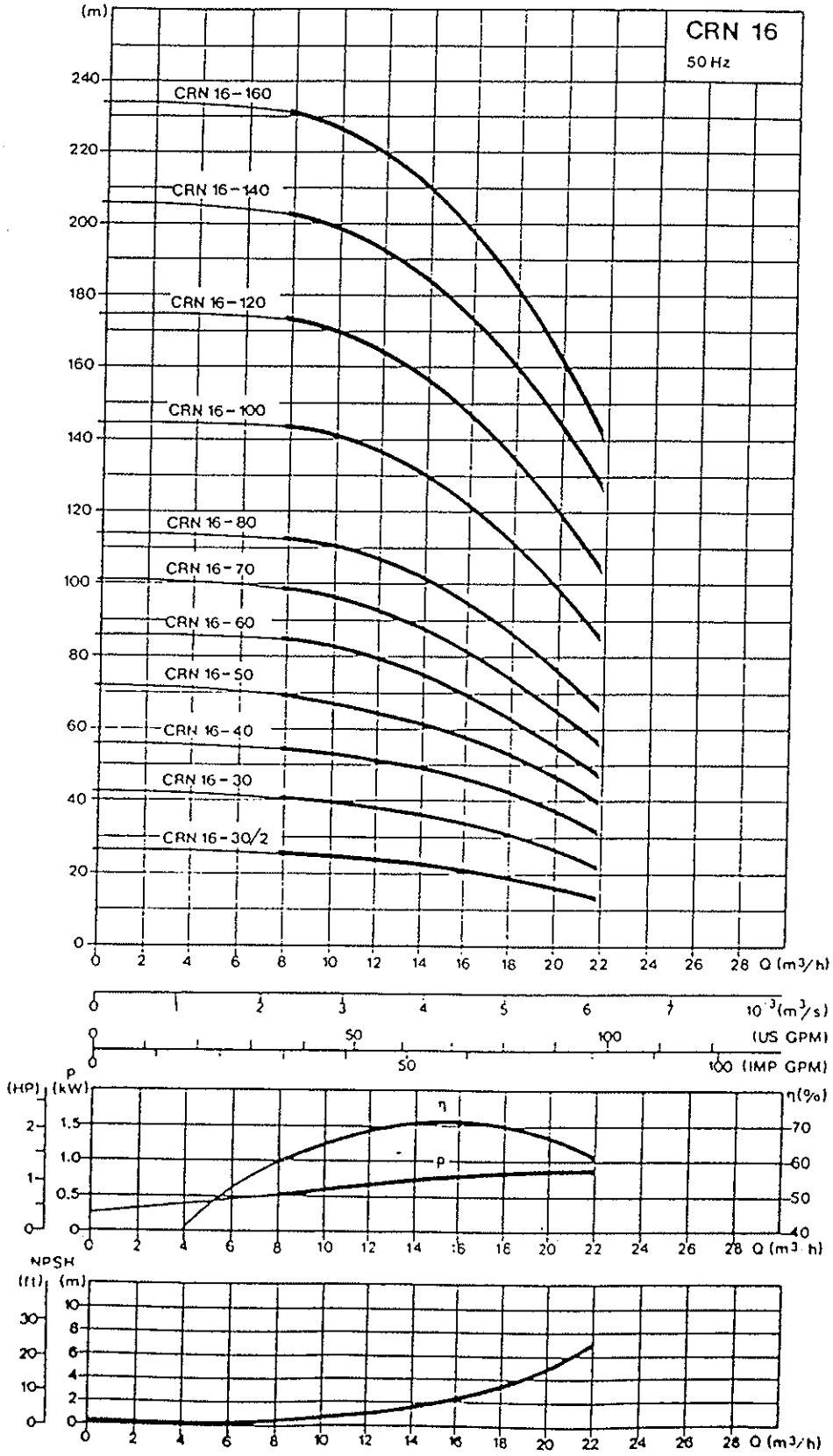

Water supply and boosting

- Positive supply pressure

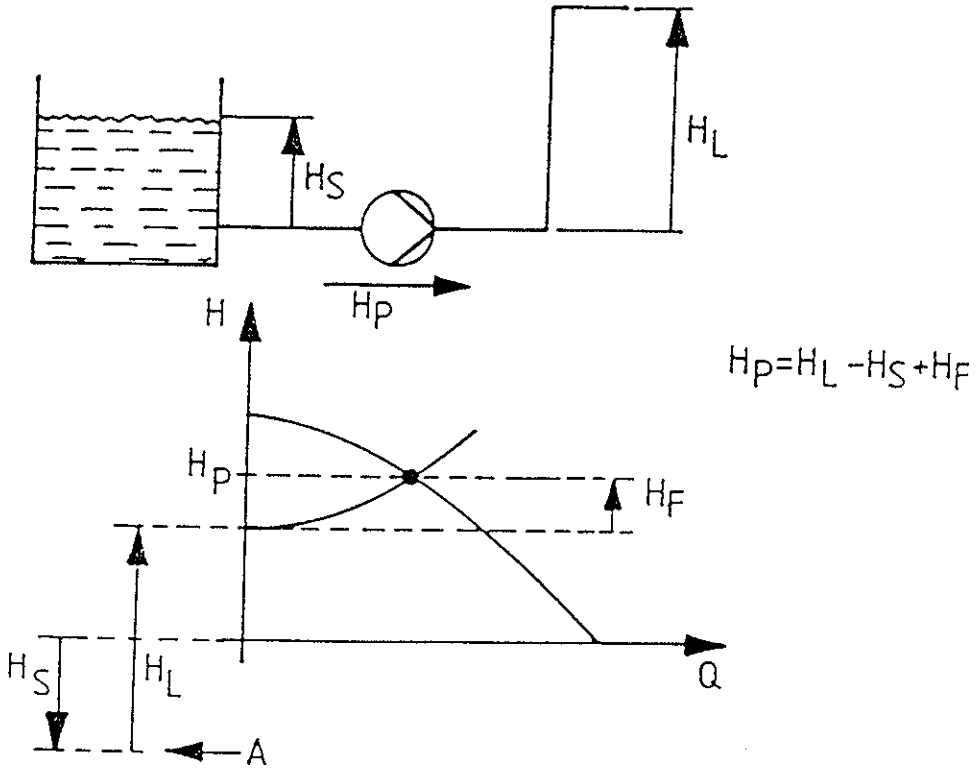

HL: Head

HS: Supply pressure

HP: Pump head

HF: Friction loss in pipes, valves etc.

A: Atmospheric pressure

Water supply and boosting

- Negative supply pressure

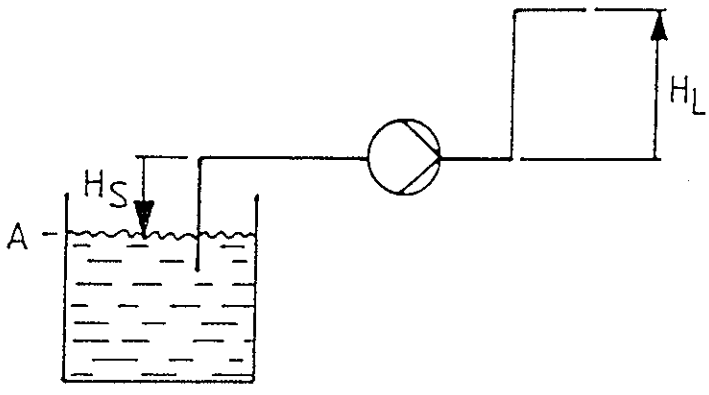

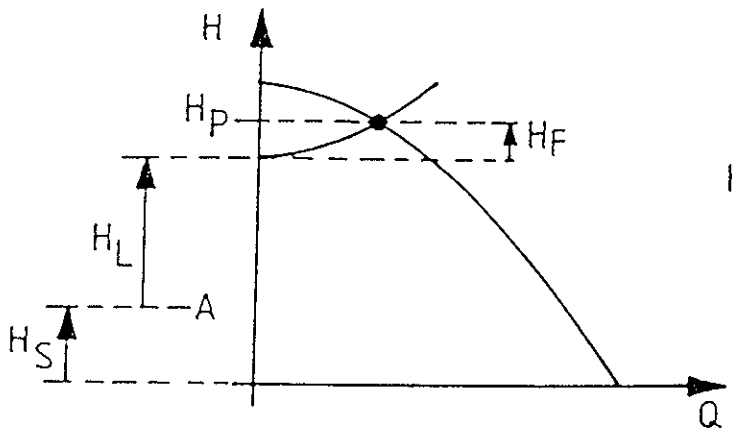

$H_P = H_L + H_S + H_F$

H_L: Head

H_S: Supply pressure

H_P: Pump head

H_F: Friction loss in pipes, valves etc.

A: Atmospheric pressure

Circulation, heating/air conditioning systems

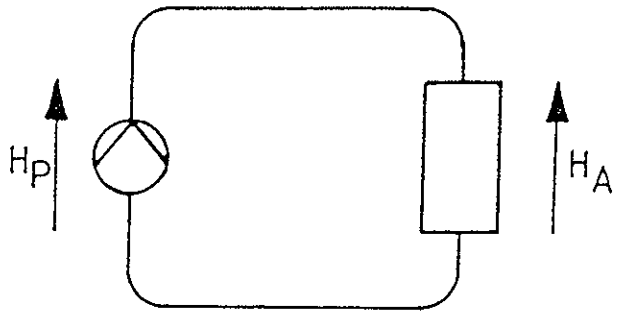

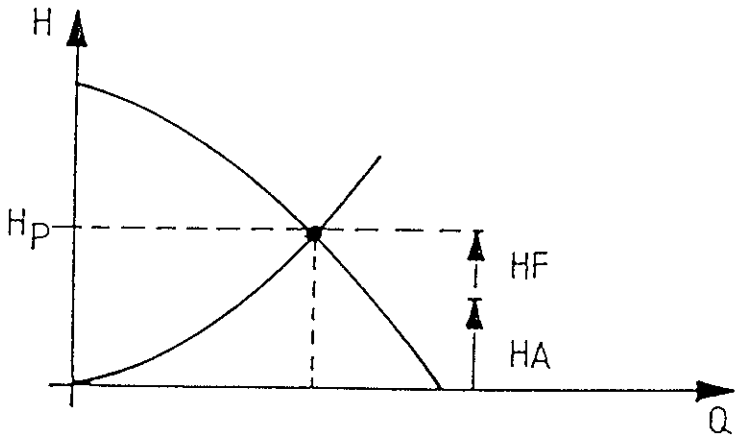

HA: Differential pressure above system

HF: Friction loss in pipes, valves etc.

HP: Pump head

- The system characteristic always goes through 0;0

Speed regulation of pump

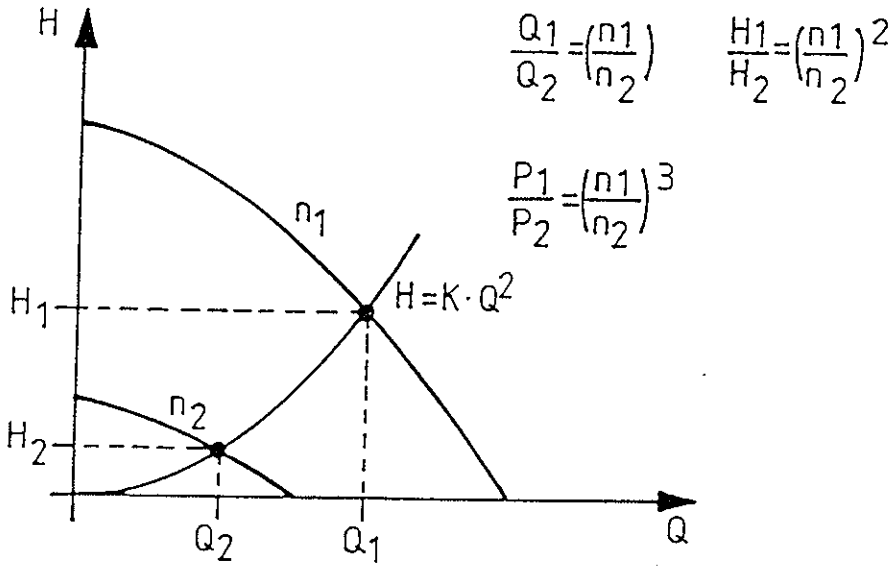

- If the pump is speed-regulated, it may be adapted to the actual pump performance requirement.

- Offers the opportunity of energy savings

- May in connection with pressure regulation prevent noise in the system.

Speed regulation of pump

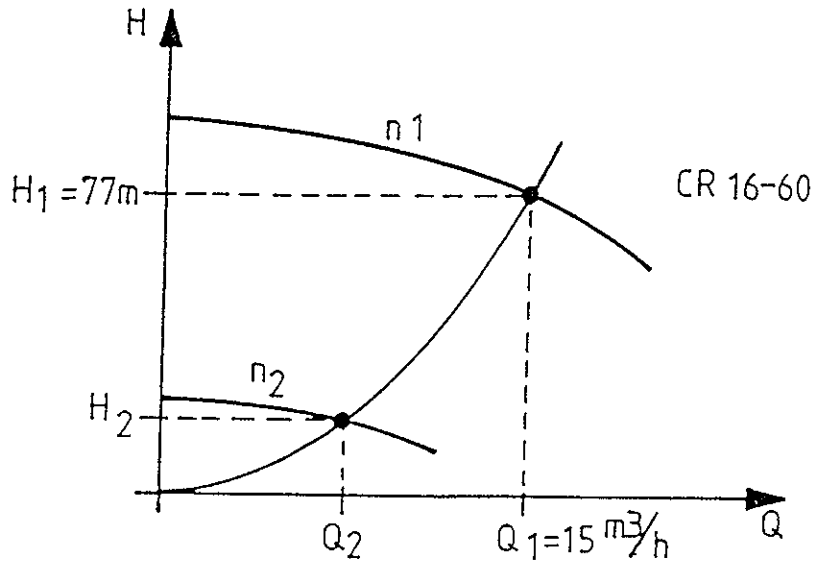

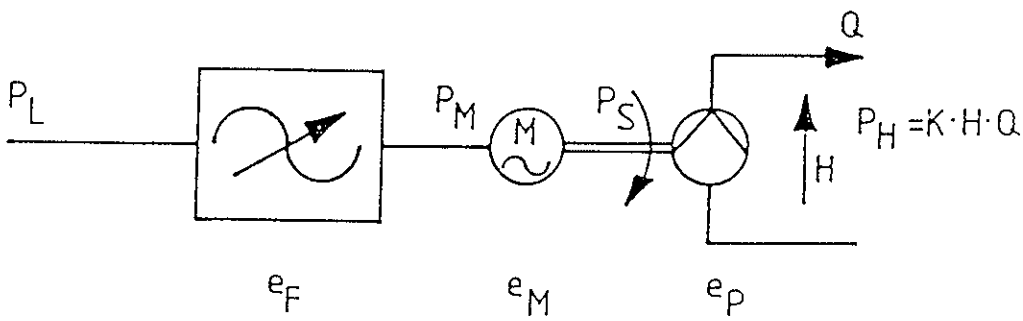

A CR 16-60 is speed regulated by way of a frequency converter.

How much is the supplied power P_L reduced, when the speed is regulated downwards from 100% to 50% rpm?

Speed regulation of pump

Example of frequency converter:

	$n_1 = 100\%$	$n_2 = 50\%$	2/1
H (m)	77	19,25	25%
Q (m3/h)	15	7,5	50%
P_H (kW)	3,15	0.39	12,5%
e_P	0.71	0,68	
P_S (kW)	4,43	0,59	13,3%
e_M	0.81	0,78	
P_M (kW)	5,47	0,74	13,5%
e_F	0,94	0,91	
P_L (kW)	5,82	0,82	14%
e_T	0,54	0,48	

The supplied power is reduced to 1/7, from 5.82 kW to 0.82 kW.

Pumps coupled in parallel

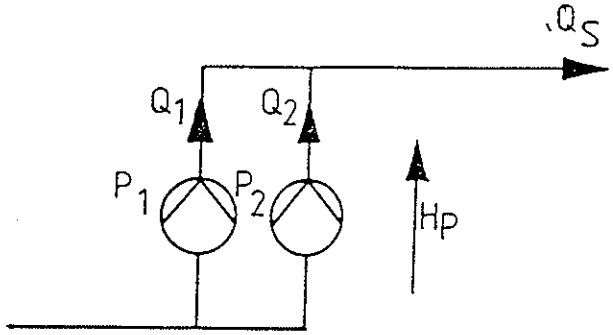

Identical pumps:

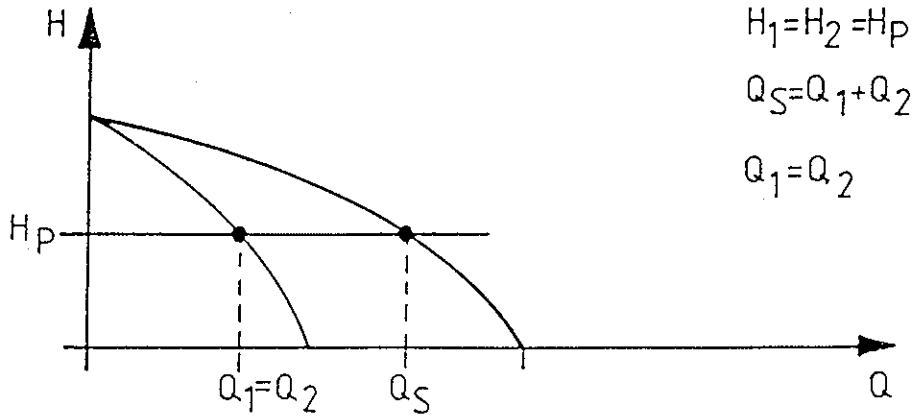

$H_1 = H_2 = H_P$

$Q_S = Q_1 + Q_2$

$Q_1 = Q_2$

Different pumps:

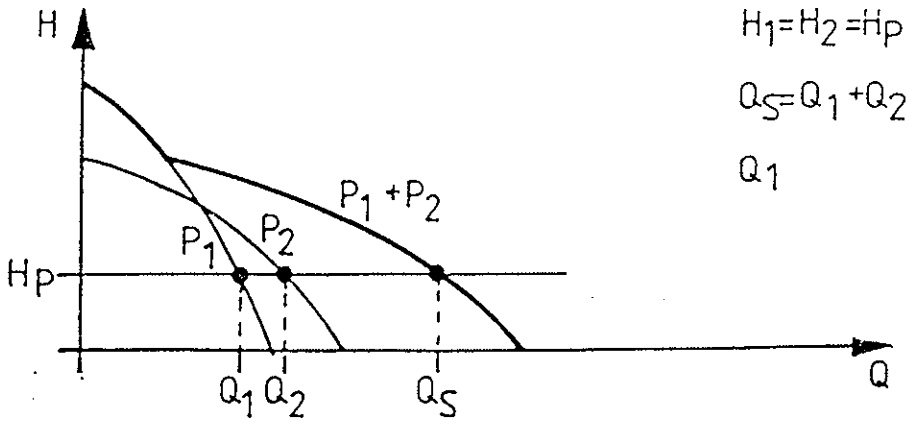

$H_1 = H_2 = H_P$

$Q_S = Q_1 + Q_2$

Q_1

- The pumps must be supplied with non-return valve

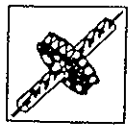

Pumps coupled in parallel

- The pumps will have the same differential pressure

- The total flow will be the sum of the flow of the various pumps at the actual pressure

- Possibility of cascade control, switching in/switching off pumps. May be combined with speed regulation of one or more pumps.

- Offers the opportunity of a wide performance range

- By way of cascade control the pump performance can be adapted more optimum to the actual requirement.

- Supply certainty. If a pump fails, there will still be a certain pump performance.

Speed regulation in connection with pumps coupled in parallel

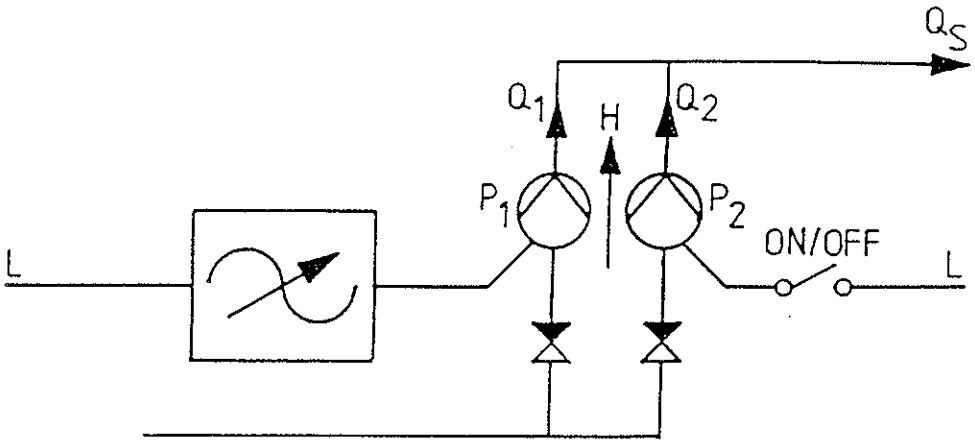

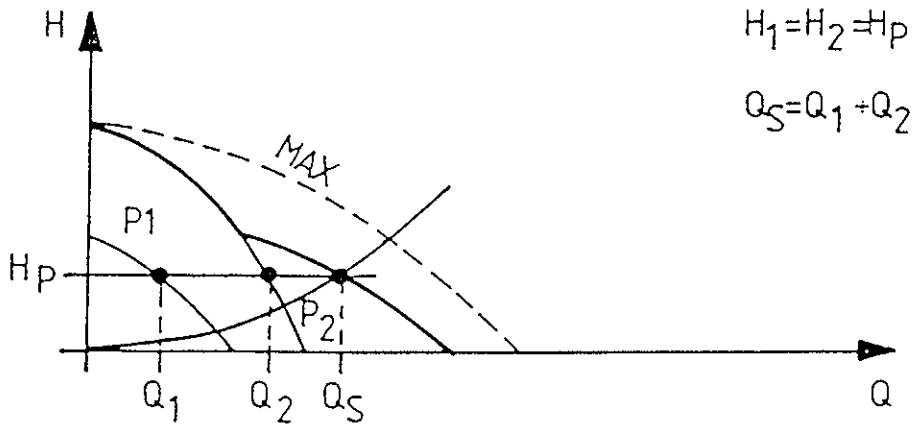

$H_1 = H_2 = H_P$

$Q_S = Q_1 + Q_2$

- A speed regulated pump, parallel to one or more pumps with nominal number of revolutions. Identical pumps.

- Opportunity of accurate control of pump performance

- Each operating point below the MAX curve can be achieved.

Solution no. 1:

- One pump ON/OFF-controlled by pressure switch, large pressure tank.

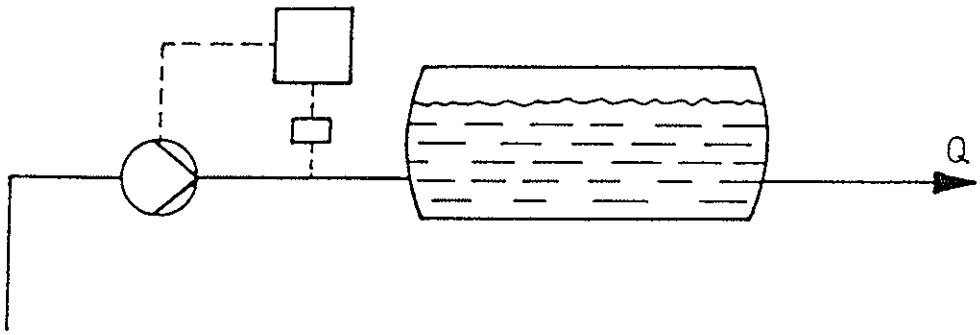

Advantages:

- simple control

Disadvantages:

- large pressure tank for large pumps
  (Q = 50 m3/h, p = 5 bar, tank = 3500 l)

- a pressure tank requires much space

- no spare pumps in case of failure

- pressure variations, high stop pressure

Solution no. 2:

- Two or more pumps in parallel ON/OF (cascade control), smaller pressure tank Hydro Maxi MS

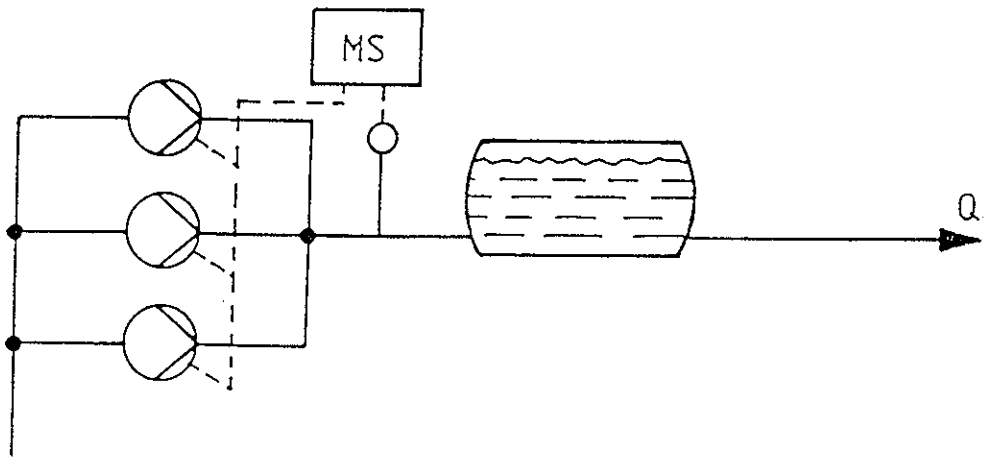

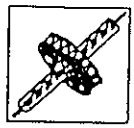

Advantages:

- spare pump in case of failure on one pump

- relatively simple control

- cheaper investments than in case of a speed regulated system

- energy saving possible

- smaller pressure tank than with system with only one pump (Q = 50 m3/h, p = 5 bar, tank = 1000 l)

Disadvantages:

- pressure variations, high stop pressure

- requires a relatively big pressure tank

- pressure tank requires much space

Solution no. 3:

- Two or more pumps; one speed controlled, the other ON/OFF, no or very low pressure. Hydro Maxi MF

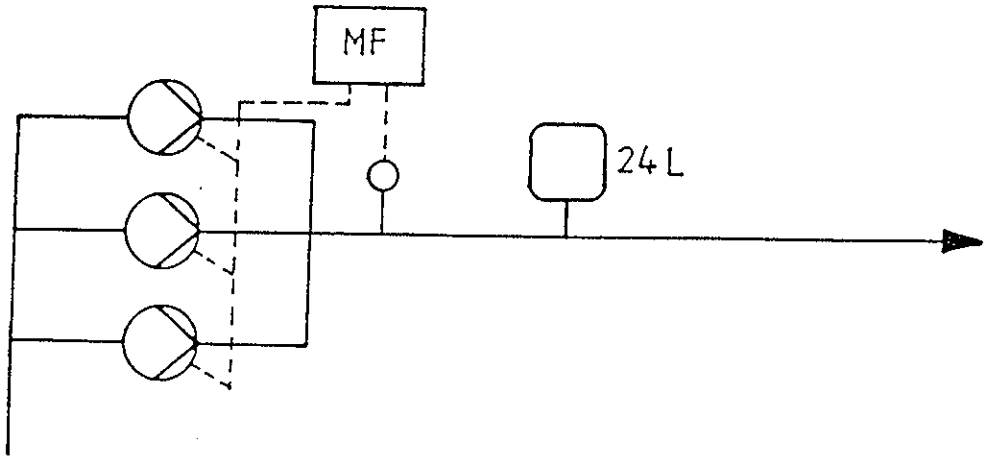

Advantages:

- constant pressure, high comfort
- little or no pressure tank
- spare pump in case of failure on one pump
- possibility of optimum energy saving

Disadvantage:

- total investment bigger than in the case of ON/OFF control of all pumps.

GRUNDFOS BOOSTER SYSTEMS

HYDRO MAXI MF OR MS

* Standard range with approx. 300 variants

* Performance range from 2-400 m3/h and up to 100 m head

* 2-6 identical pumps, coupled in parallel, type CR 2-4-8-16-30 or 60

* Micro processor-controlled control unit with frequency converter (Hydro Control MF) or ON/OFF control (Hydro Control MS)

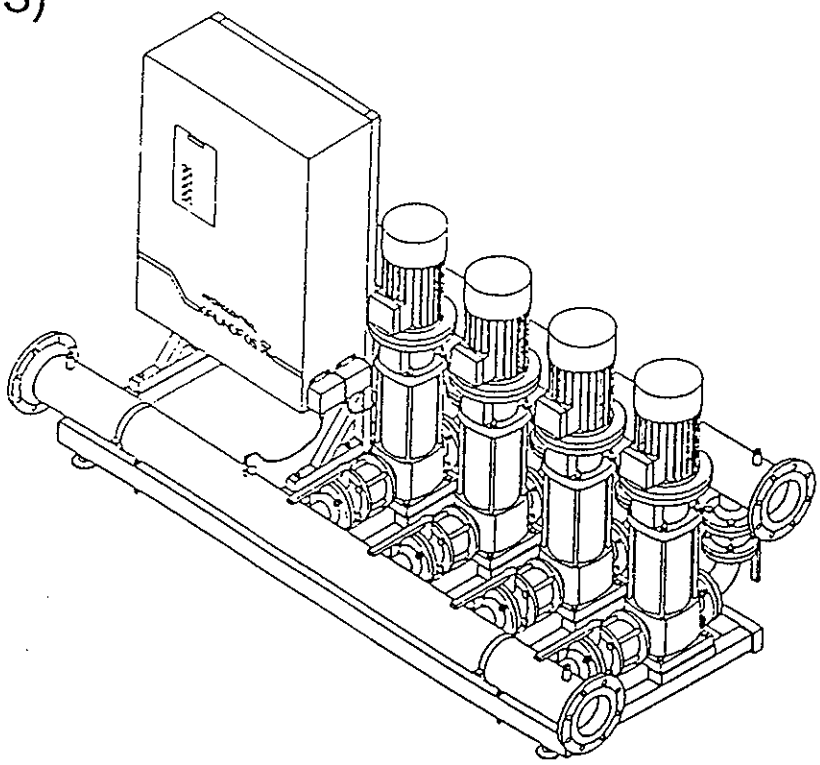

Construction Hydro Maxi

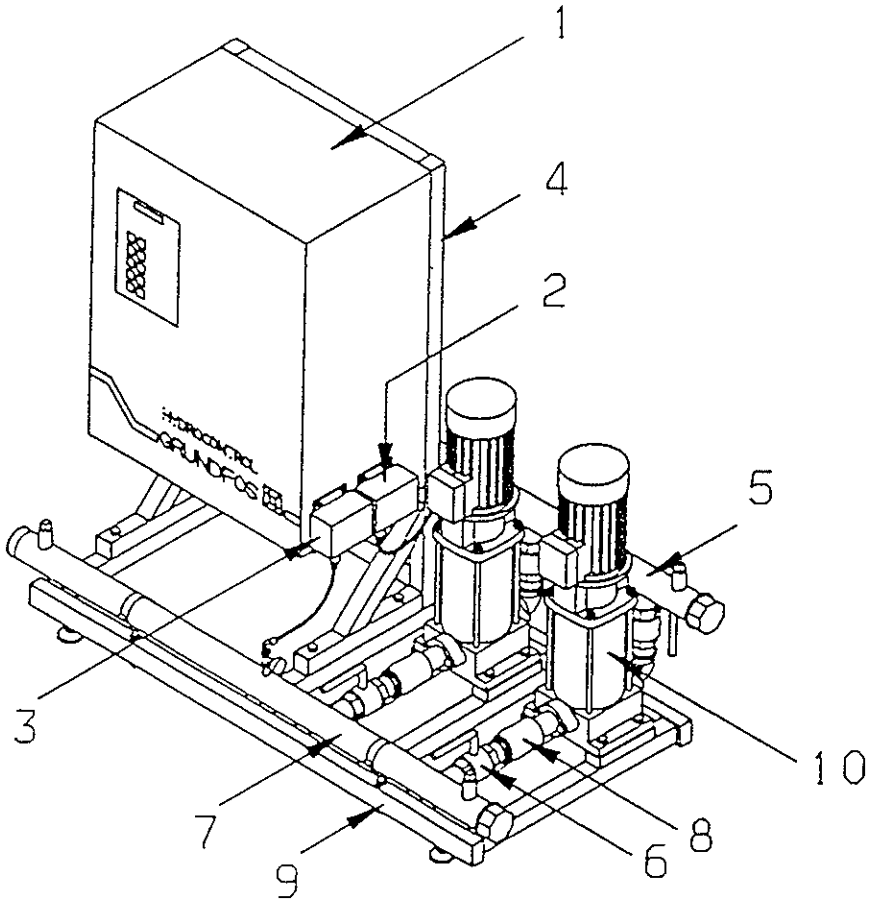

Pos.	Designation	Number
1	Hydro Control MF/MS	1
2	Pressure transmitter EMP 2	1
3	Pressure switch KPS 33	1
4	Stand	1
5	Discharge manifold	1
6	Lever arm ball valve	2 per pump
7	Suction manifold	1
8	Non-return valve	1 per pump
9	Base frame	1
10	CR-pump	2 - 6

Performance range

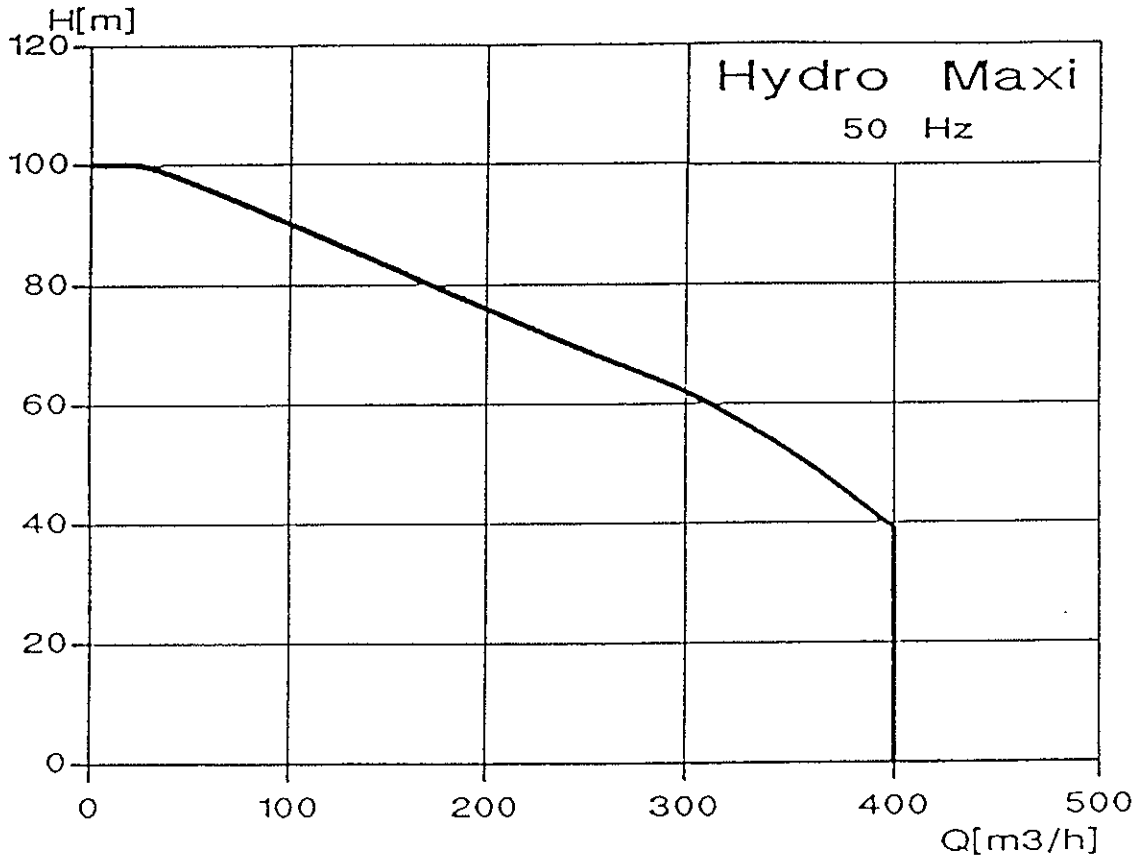

Main function MF

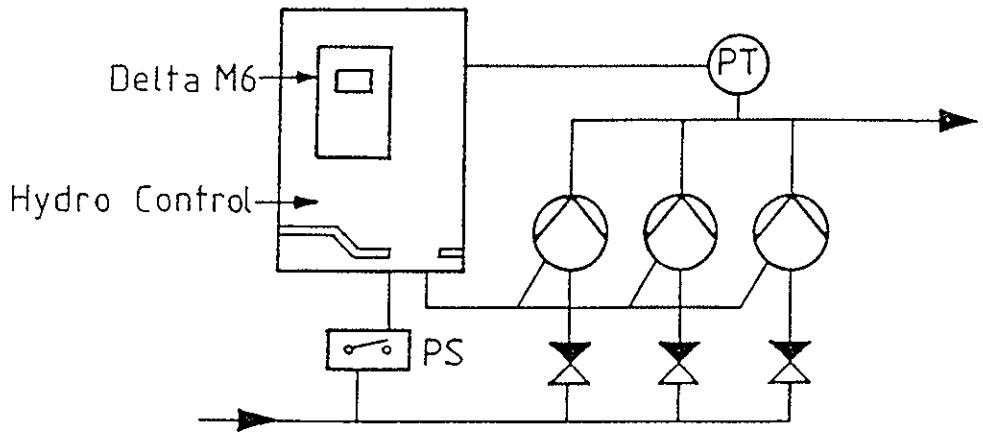

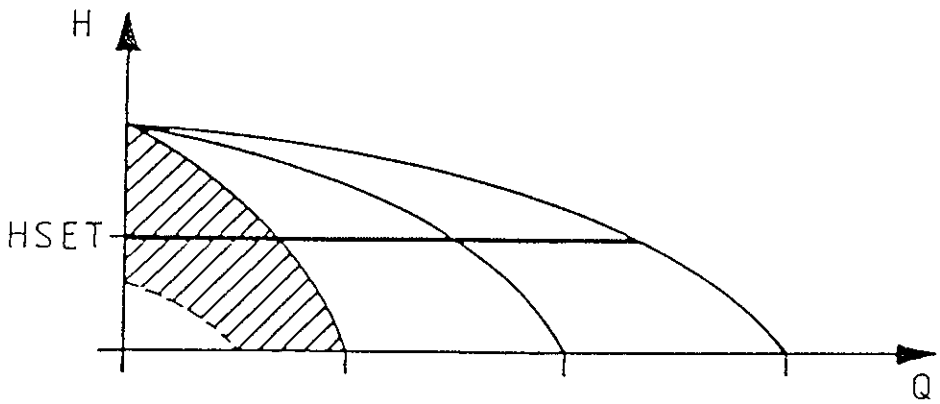

- One pump speed-regulated by way of frequency converter
- Remaining pumps ON/OFF direct on mains (as required)
- Automatic alternation between the pumps
- **Tank not required**

Main function MS

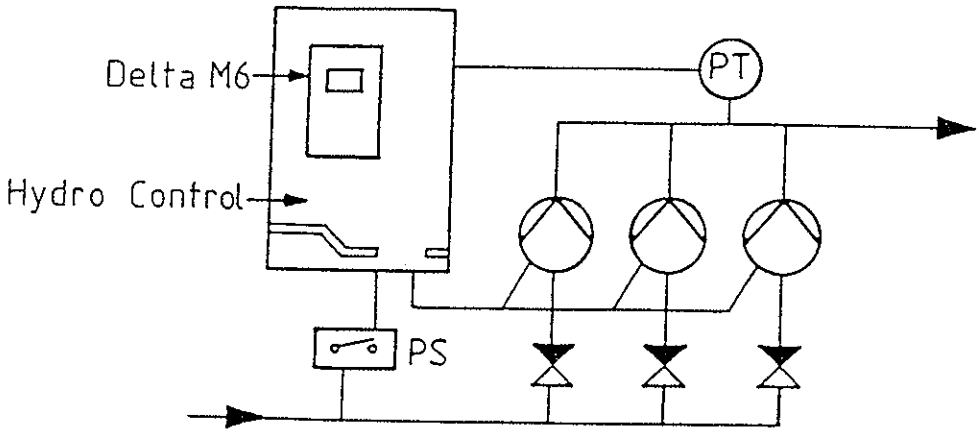

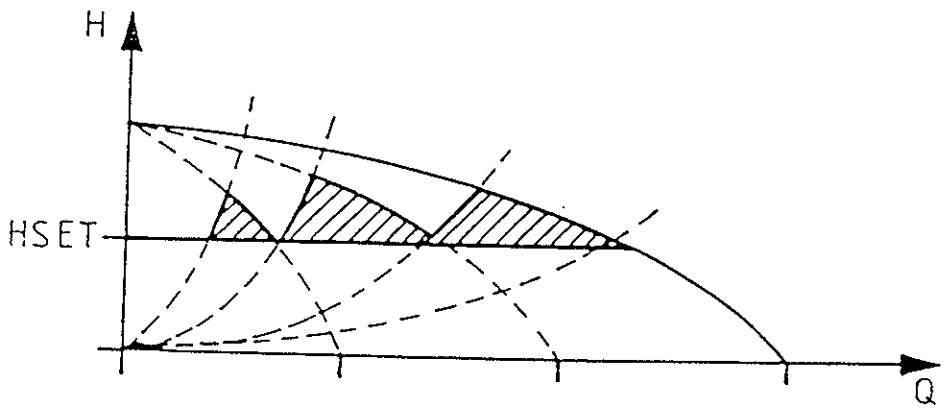

- Without frequency converter
- Pumps ON/OFF direct on mains as per requirement
- Automatic alternation between the pumps
- Tank is required

Control parameters

* Hydro Control can be supplied with programme (EPROM) for different regulation parameters:

  - pressure
  - differential pressure
  - flow
  - level

  Set point influence

* The set point can be influenced by various parameters.

  If the regulation parameter is e.g. pressure, the set point may be influenced by:

  - positive pressure
  - flow
  - indirect flow

Method of operation

AUTO: Normal, automatic operation

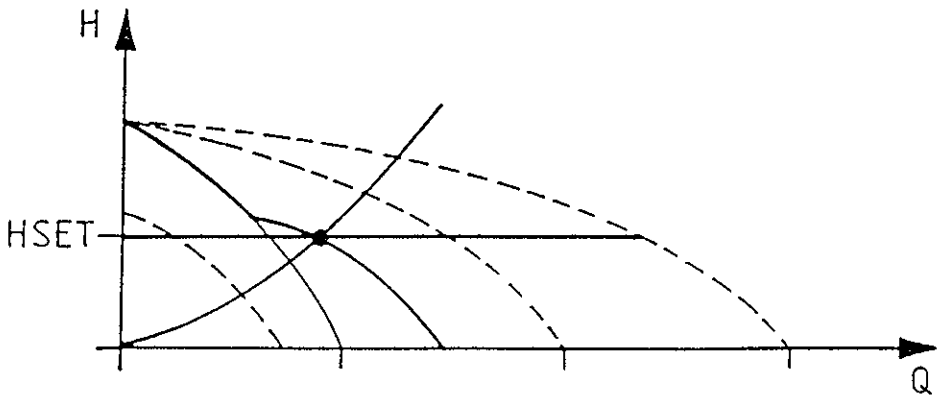

Method of operation

MANUAL:

Manual control of pump performance. No pressure adjustment.

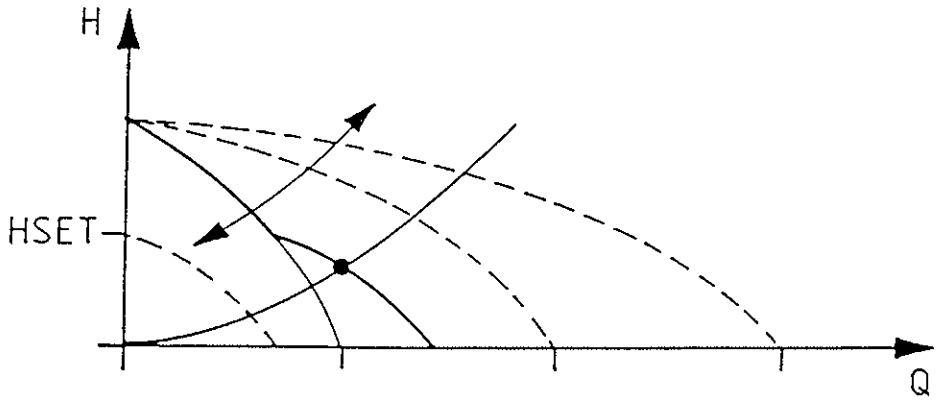

- All surveillance functions active
- Stepless adjustment of pump performance (MF) between min. and max. performance
- Actual pressure can be read from the display
- Applicable for commissioning/test

Methods of operation

NET:

All released pumps are coupled direct on mains. No regulation of pressure.

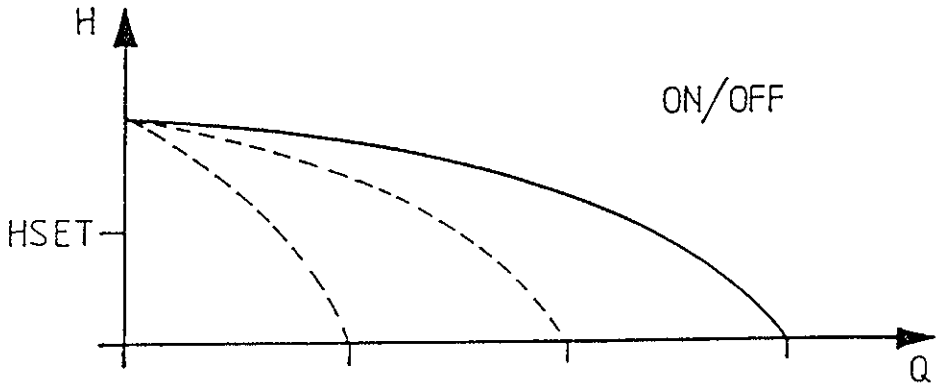

- All surveillance functions active
- Frequency converter (MF) not working

Test:

All pumps stopped (stand-by)

- Automatic pump test once a day
- In turn, all pumps are switched on a few seconds 00.10 h
- All surveillance functions active

Methods of operation

EMERGENCY: Pumps coupled direct on mains

- The pumps are switched in individually by way of switches in control cabinet

- Electronics unit Delta M6 and frequency converter (MF) switched off

Set points

- Set point H SET (ADJ) is set on Delta M6 via menu

- Remote control of set point by way of an analog signal 0-20 mA

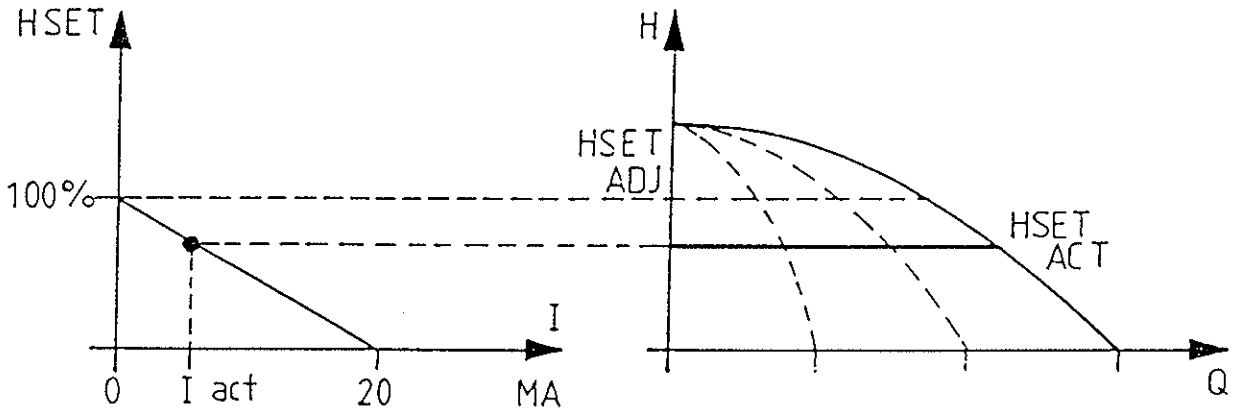

* Possibility of remote control of required pressure (H SET) from e.g. a BMS system

Set points

- Remote control of set point by way of digital signal (switch)

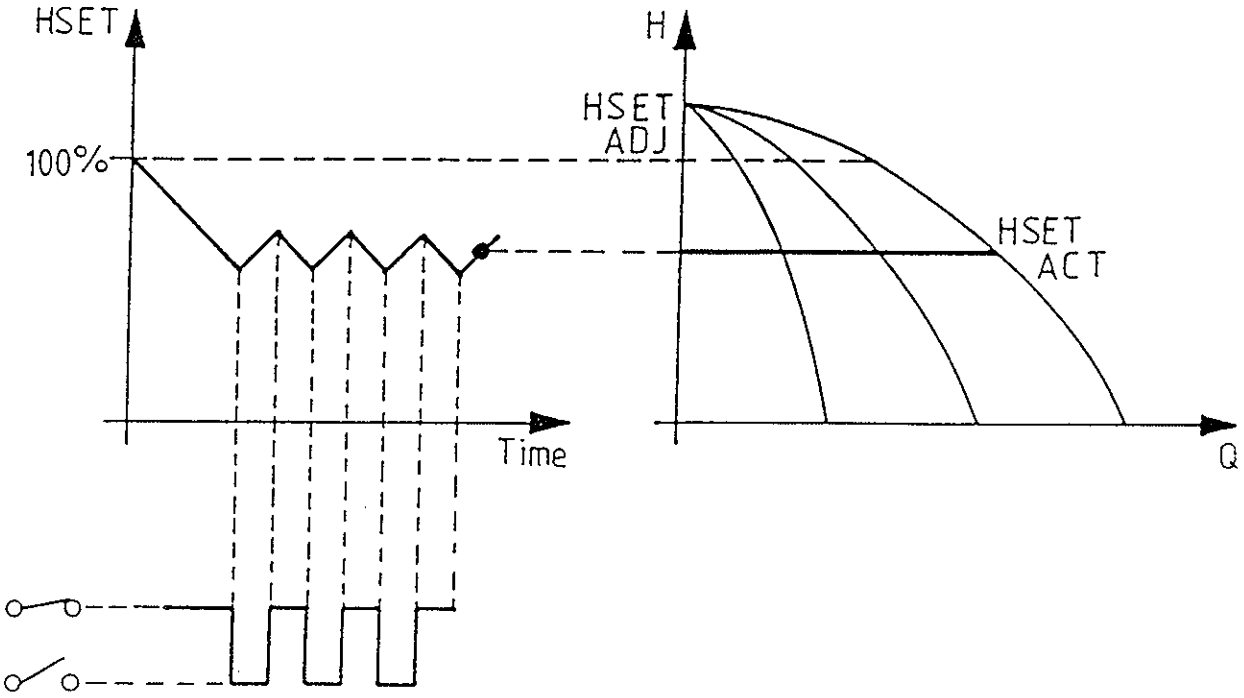

- Slope time can be set between 1 and 100 min.

- Opportunity of remote control of required pressure (H SET) from e.g. a BMS system

- Guidance of H SET from e.g. pressure switch

Set points / clock function

- Possibility of setting three different set points

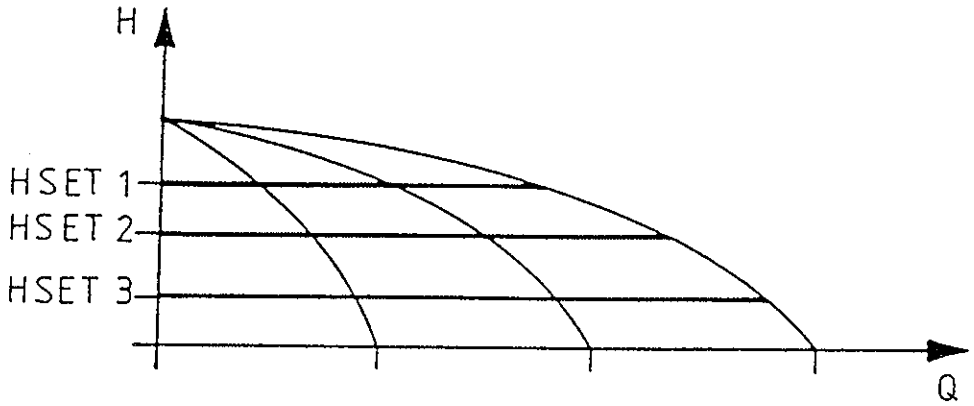

- Built-in clock function with week programme is able to switch between the three set points

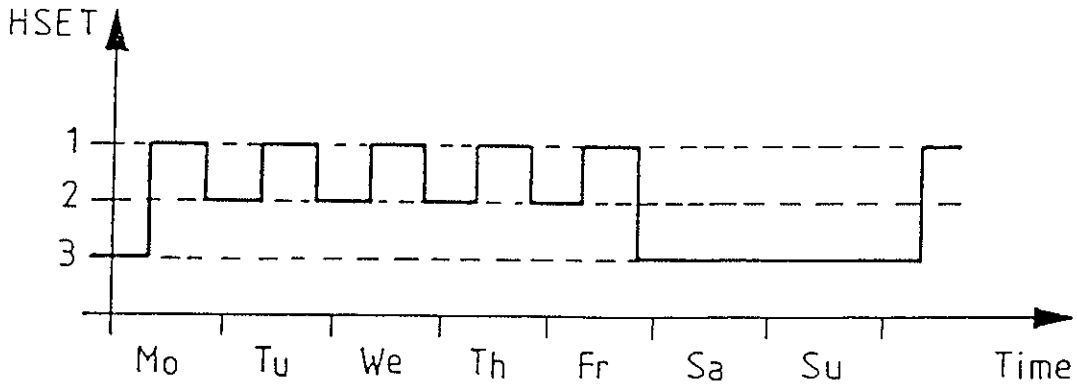

- Input for compulsory control of set point to set point 1 H SET 1

Friction loss compensation

- Built-in friction loss compensation which increases setting by increased flow

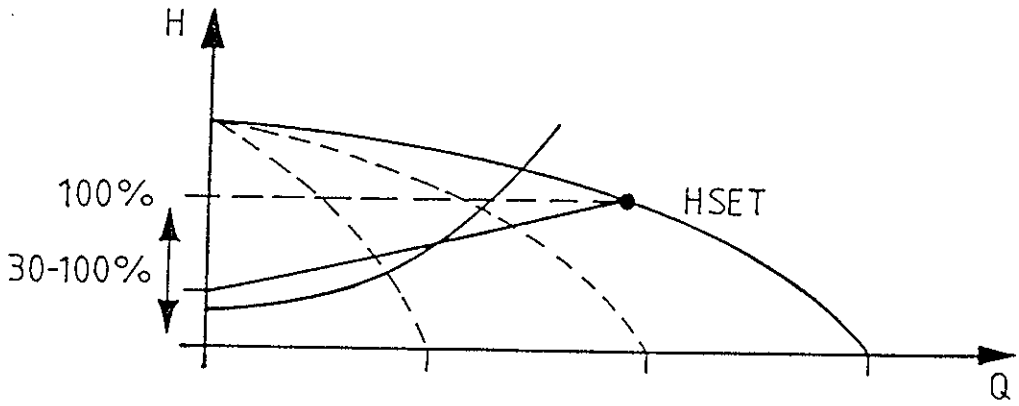

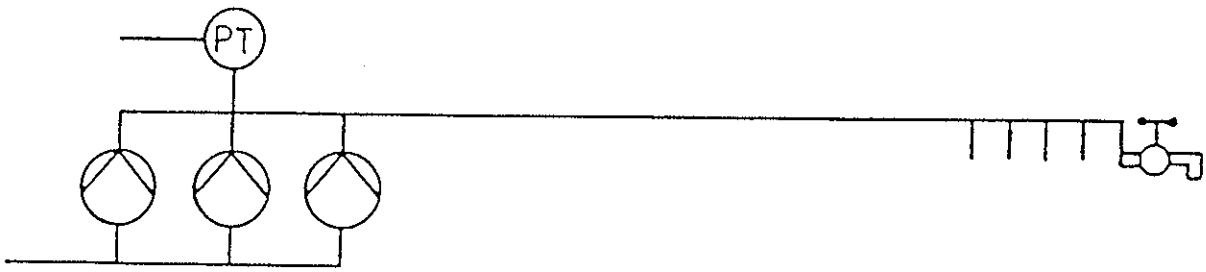

- Compensates for friction loss, ensures a more constant pressure at the consumer's end

- Resulting in:

  - lower operating pressure
  - piping less loaded
  - energy savings
  - high comfort
  - longer life

Automatic stop of "last" pump

- Hydro Control MF automatically stops the pump controlled by the frequency converter at low flow

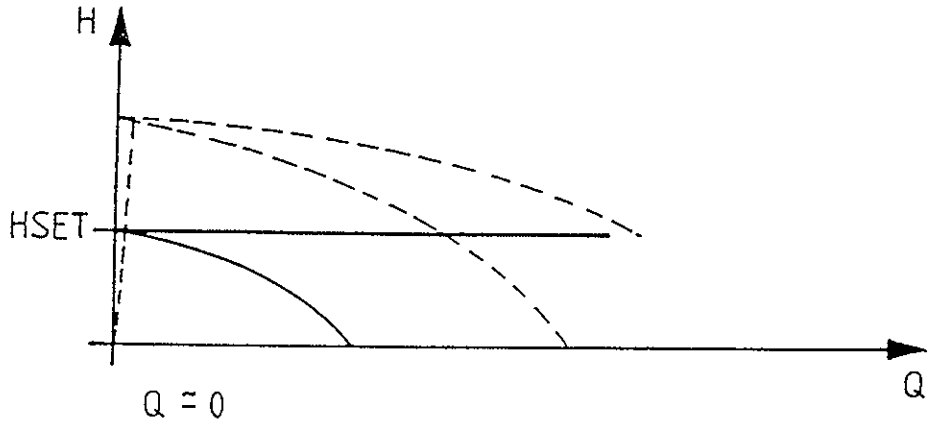

- Test of low flow:

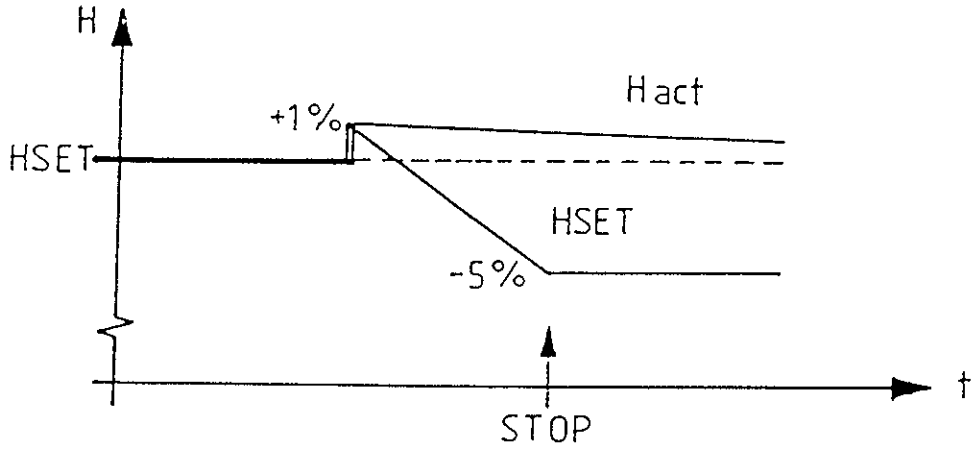

- Test every minute, when only the frequency-controlled pump is operating

- **Energy saving**

- **Reduces operating time of system**

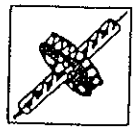

Motor protection

* All motors are protected against overload by means of:

  - Built-in motor protection (standard)

  - Protection via thermistor or thermal switch in the motor windings

* In case of overload:

  - The pump is switched off

  - Another pump is switsched on

  - Alarm signalling in display, and alarm lamp signals

  - Via the relay output an alarm signal is given to e.g. a CTS system

* **Optimum protection of motors, also in case of frequency converter operation**

* **Spare pump function prevents total failure of pump performance in almost any case**

Temperature surveillance of pump

- Possibility of connecting temperature sensors for surveillance of temperature in the pumped liquid

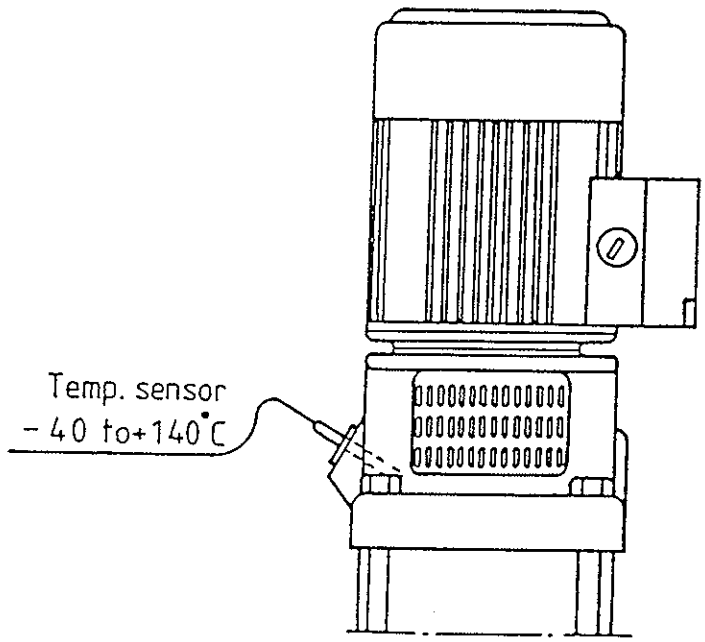

- If maximum set temperature exceeds -5°C, a WARNING is signalled

- If maximum temperature is exceeded, the pump is switched off, and ALARM is signalled

- **Can secure the pump against damage in case of long time operation at Q = 0.**

Shortage of water

* Input for signal concerning shortage of water via:

  - pressure switch on suction side

  - pressure transmitter on suction side

  - level switch in a possible tank on the suction side

* In case of shortage of water all pumps are switched off, and an ALARM is signalled

* Automatic start, when water supply is again o.k.

* Secures the pumps against damage as a consequence of dry-running

Maximum pressure

- Systems secured against maximum pressure by setting of maximum pressure on Delta M6

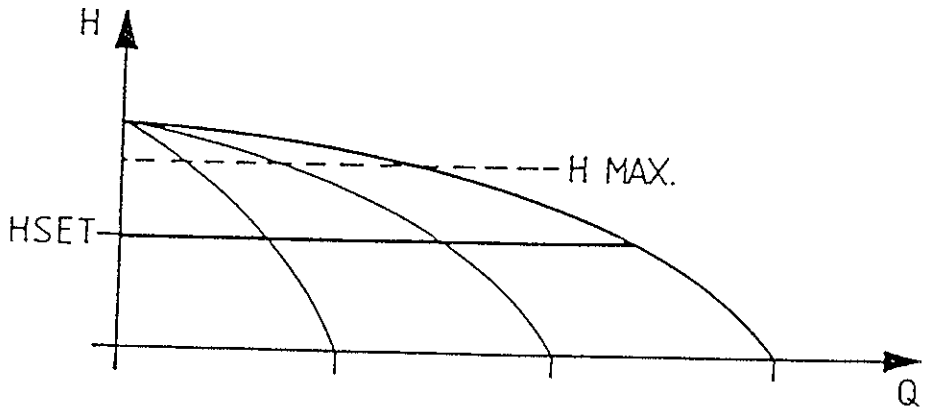

- If maximum pressure is exceeded, all pumps are switched off immediately

- Automatic re-start of system, when actual pressure is again below maximum pressure

- **Secures system against damages caused by too high pressure.**

Signalling

- For remote surveillance of Hydro Control from e.g. a BMS system a number of output signals (relays) are available:

  Common failure reporting

  Activated, when one or more failures are reported.

  Warning

  Activated, if the temperature of pump(s) is approx. 5°C from max. permissible temperature.

  Single alarm signal

  Alarm signalling for each pump/motor (accessory)

  Single operation report

  Operating signal for each pump (accessory)

- **Ensures the possibility of quick intervention in case of operating disturbances**

HYDRO MAXI MF/MS

APPLICATIONS

* WATER WORKS
* BUILDINGS
* HOTELS
* SCHOOLS
* GOLF COURSES
* HOSPITALS
* HORTICULTURE
* INDUSTRY
* etc.

HYDRO MAXI MF/MS

HOTEL

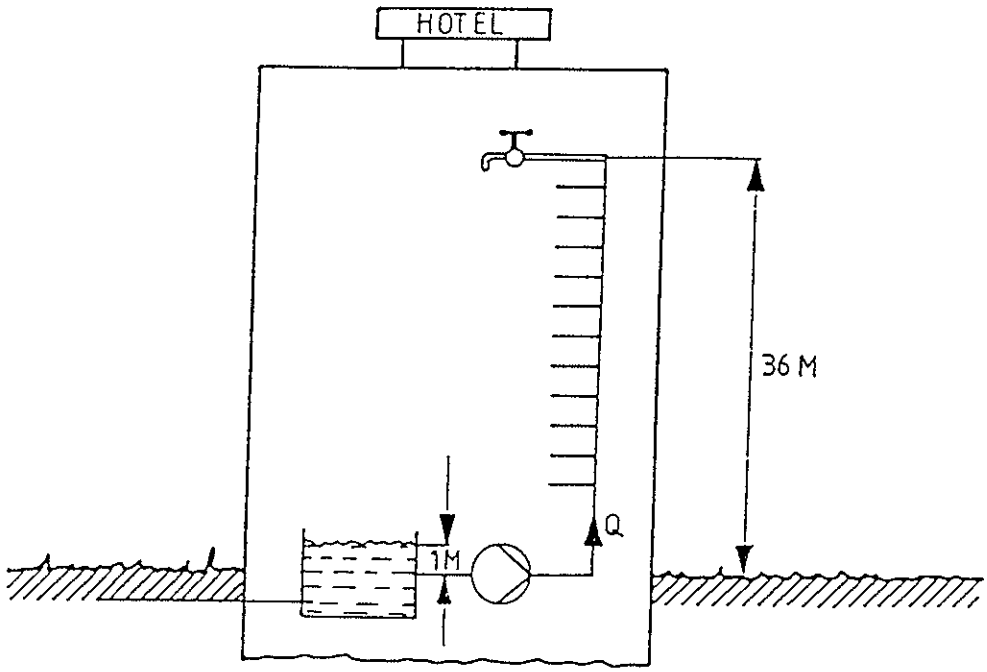

- Hotel with 300 beds, with a peak load of 55 m3/h
- 36 m to the top tap point
- 1 m supply pressure from tank
- Required is 15 m pressure at top tap point
- Friction loss at max. flow calculated to be 20 m
- Requirements to pumping system: High comfort (constant pressure) and minimum space consumption .

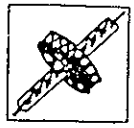

HYDRO MAXI MF/MS

HOTEL, selection of system

Water quantity:	55 m3/h
Head:	
- static height	36 m
- pressure top tap point	+ 15 m
- friction loss	+ 20 m
- pre-pressure	- 1 m
Head	70 m

The correct choice:

Hydro Maxi 3xCR 16-70 MF with 24 l tank,

based on:

1) price
2) space requirements
3) spare pump capacity
4) operation economy (flow profile)

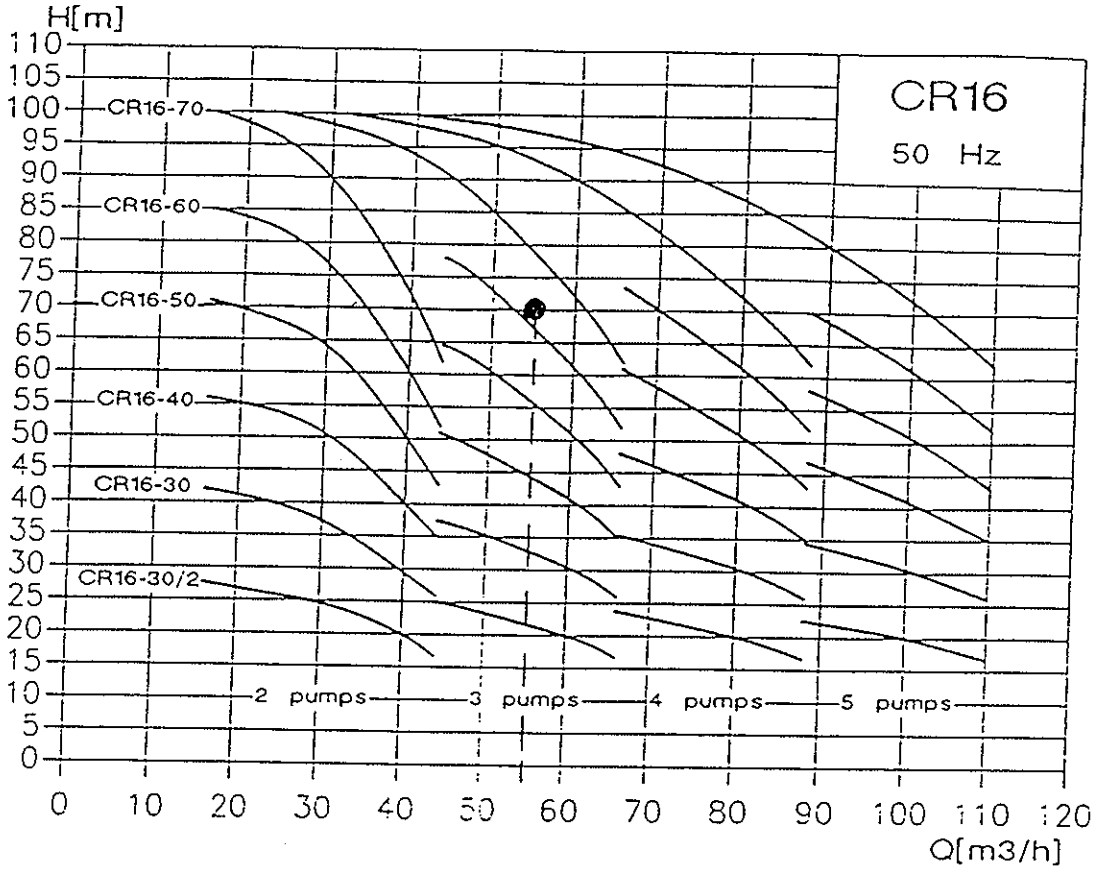
H[m]
CR16
50 Hz
CR16-70
CR16-60
CR16-50
CR16-40
CR16-30
CR16-30/2
2 pumps
3 pumps
4 pumps
5 pumps
Q[m3/h]

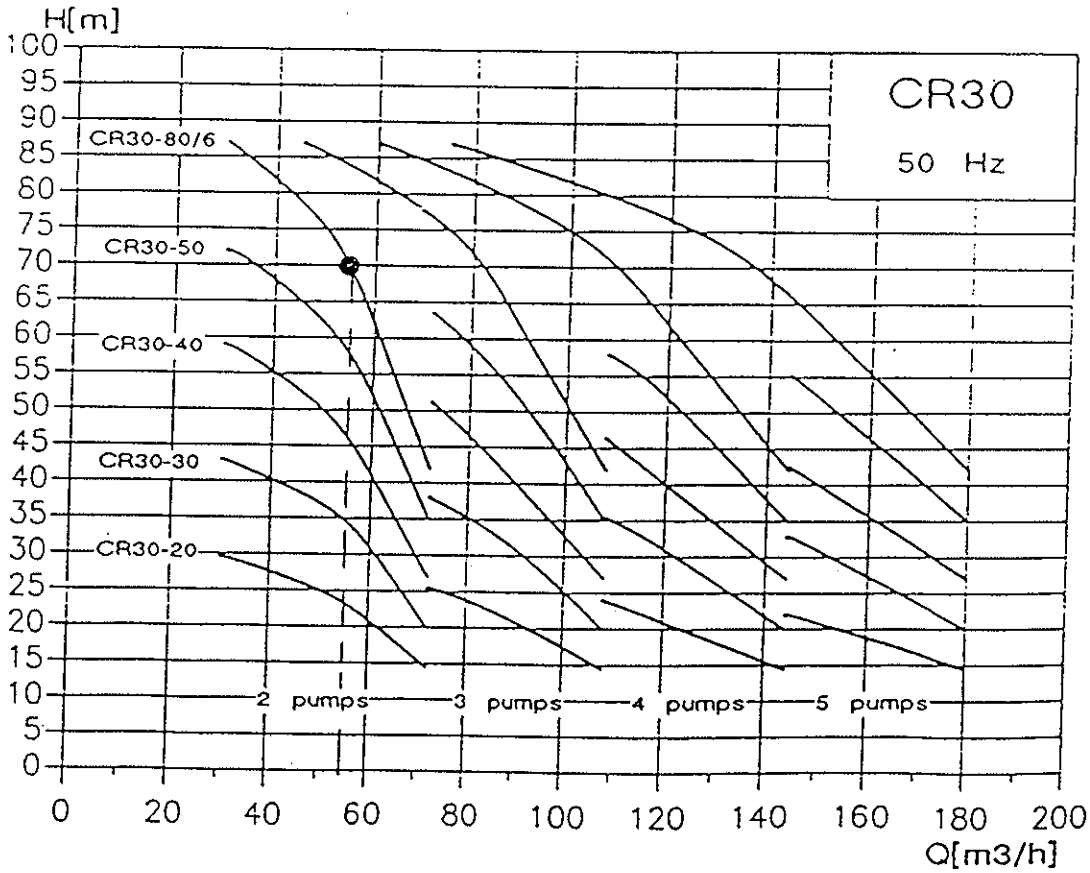
H[m]
CR30
50 Hz
CR30-80/6
CR30-50
CR30-40
CR30-30
CR30-20
2 pumps
3 pumps
4 pumps
5 pumps
Q[m3/h]

HYDRO MAXI MF/MS

HOTEL:

1) 3 x CR 16-70, 7.5 kW
2) 2 x CR 30-80/6, 11.0 kW

BEFORE SELECTION: Estimate a consumption pattern:

CONSUMPTION PROFILE:

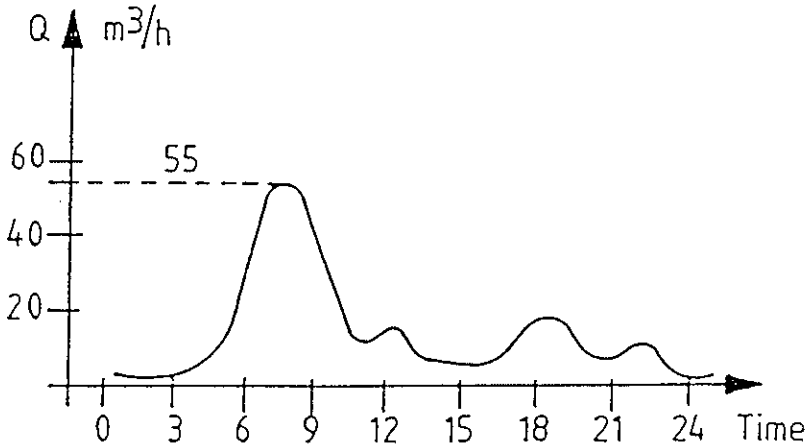

Priority:
a) price
b) space
c) stand-by capacity
d) operating economy (profile)

	A	B	C	D	RESULT
3 x CR 16-70	1	2	1	1	5*
2 x CR 30-80/6	2	1	2	2	7

THE BEST SOLUTION:

Hydro Maxi 3 x CR 16-70 MF with 24 l tank

HYDRO MAXI MF/MS

GOLF COURSE:

Irrigation system for golf course

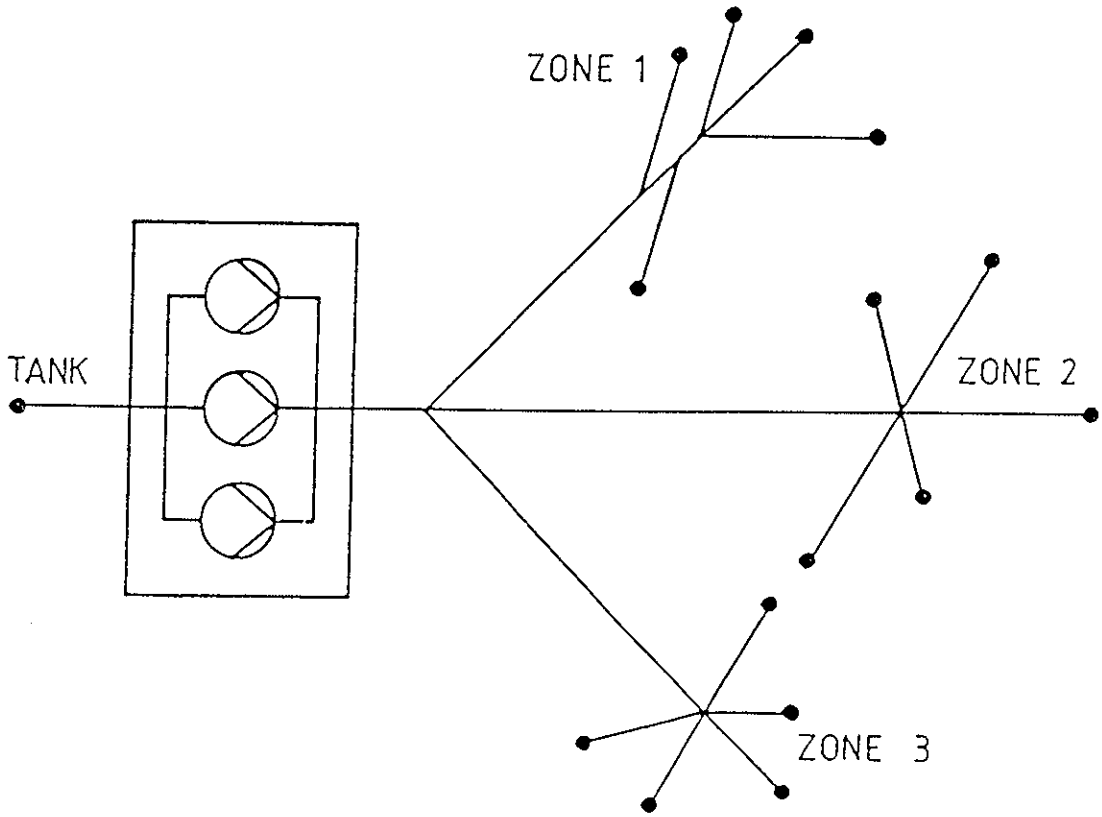

* By way of remote control it is possible to supply different pressure to the different zones, i.e. zone irrigation.

* Friction loss compensation can be used with advantage.

* Energy savings

HYDRO MAXI MF/MS

INDUSTRY:

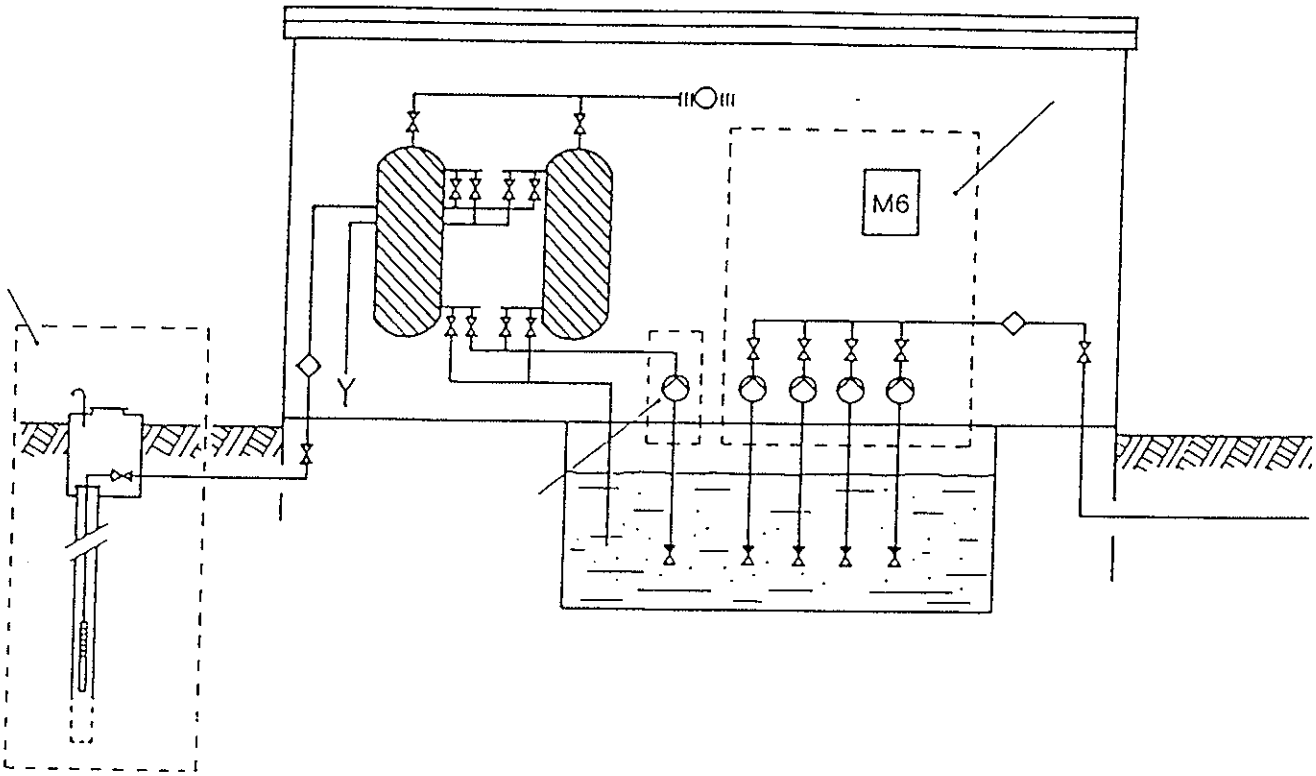

CIRCULATORS

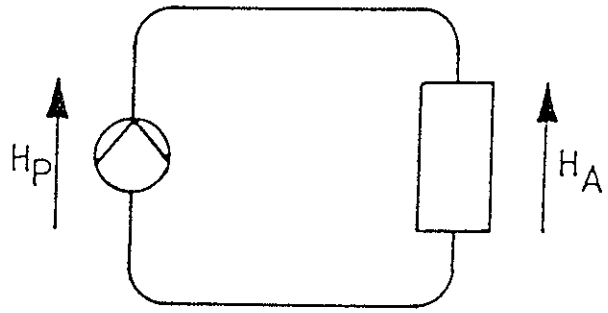

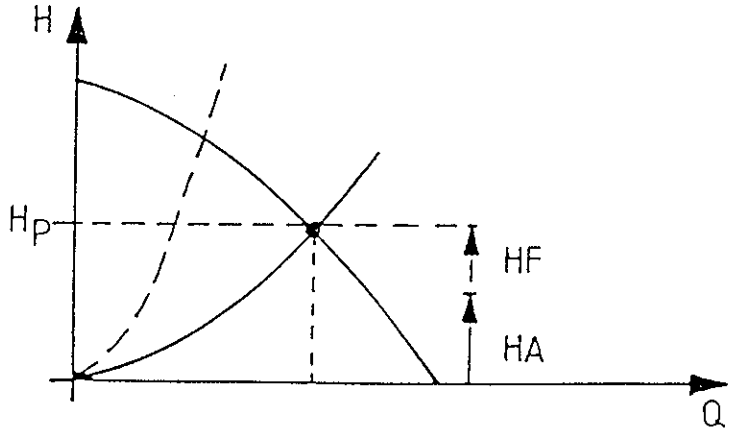

* Circulators are used for circulation of hot and/or cold water.

* The system characteristics will be variable

* Varying demand for pump performance

DELTA CONTROL MF/MS

For control, regulation and surveillance of pumps in heating and air-condition systems GRUNDFOS offers a standard range of controls:

Delta Control MF/MS

* Same construction and main functions as Hydro Control MF/MS
* 1 - 6 pumps in parallel
* MF version: one pump is speed-controlled by a frequency converter, the other pumps are ON/OFF as required.
* MS version: the pumps are ON/OFF as required.

Control parameters

* Delta Control can be supplied with programme (EPROM) for different regulation parameters:

  - differential pressure
  - flow
  - supply-pipe temperature
  - return-pipe temperature - differential temperature

Set point influence:

* The set point may be influenced by the following parameters:

  - flow
  - supply-pipe temperature
  - return-pipe temperature
  - differential temperature

Application examples

- Differential pressure

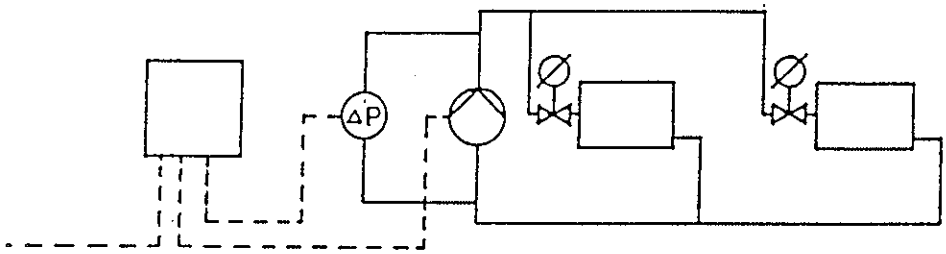

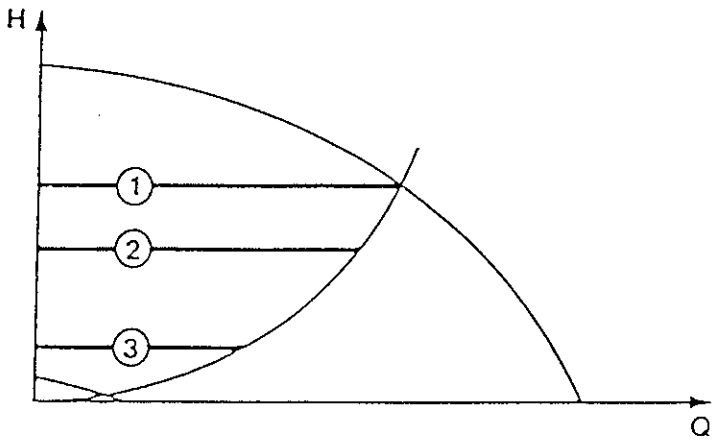

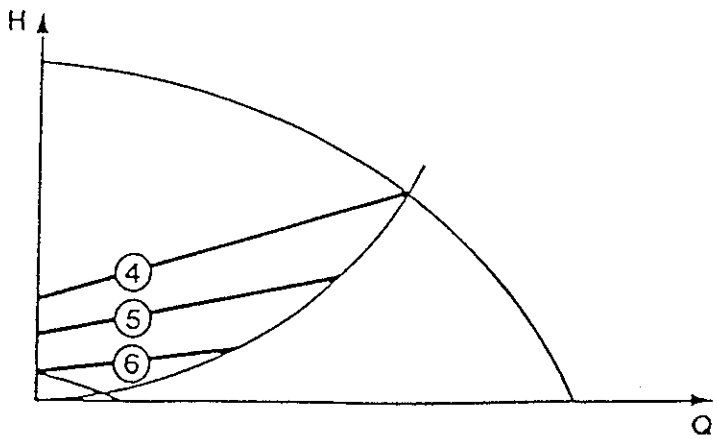

Application examples

- Differential pressure as a function of outdoor temperature

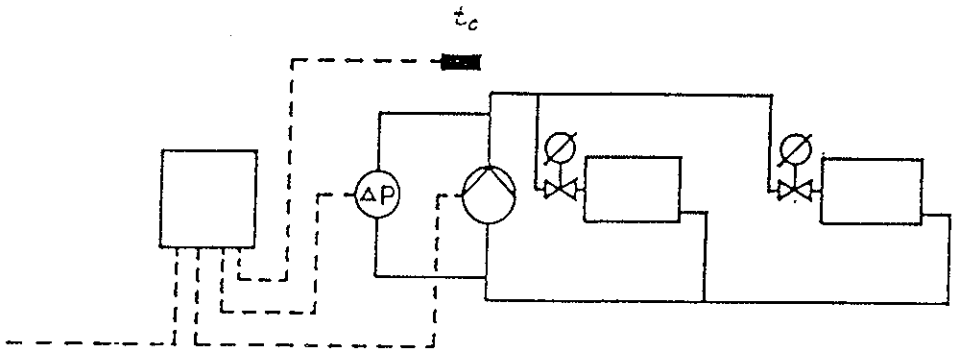

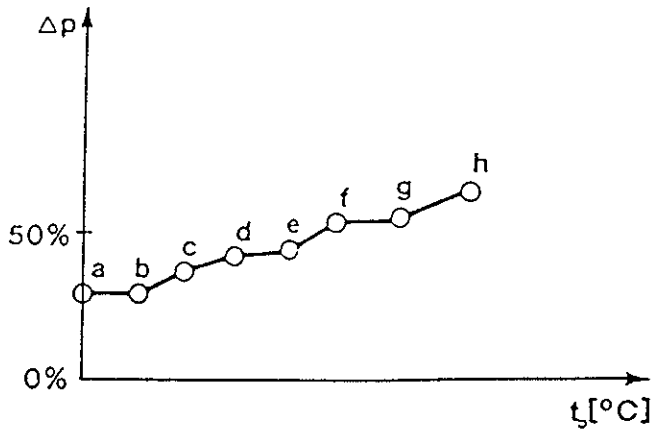

Application examples

- Differential pressure as a function of flow

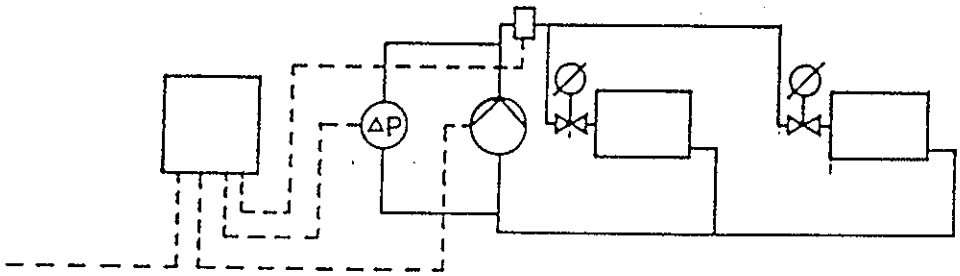

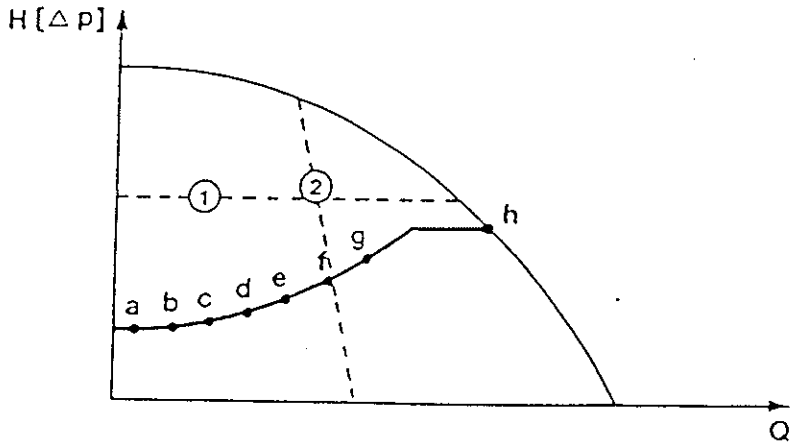

Application examples

- Differential temperature

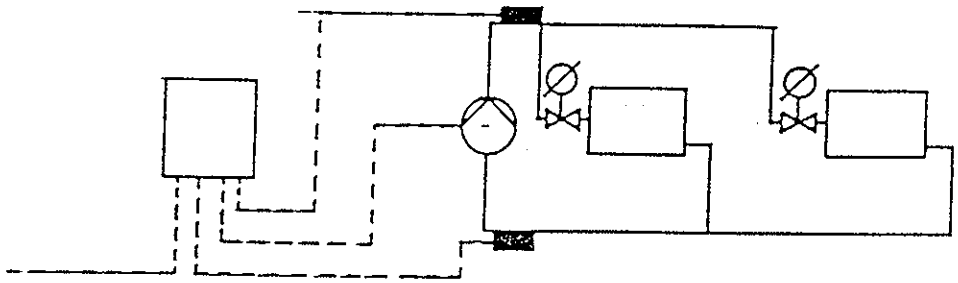

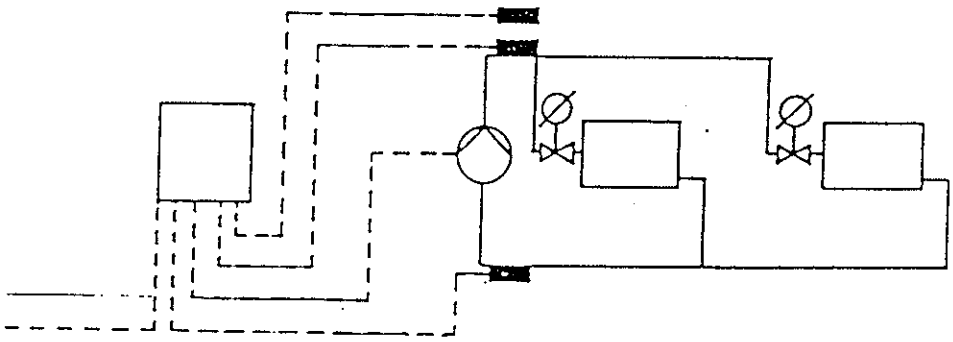

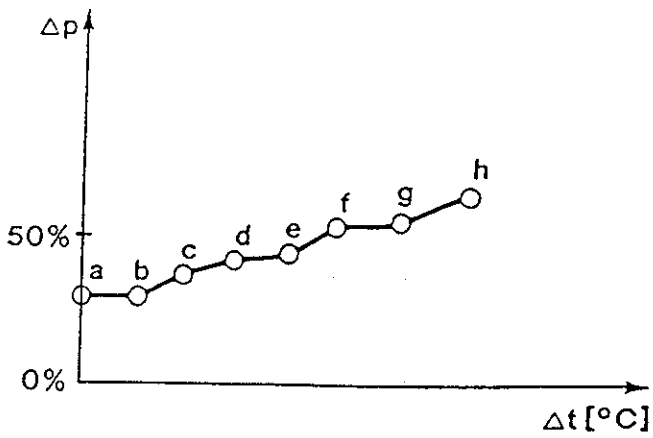

PUMPS AND PUMP CONTROLS IN FUTURE

TWO WORDS WHICH WILL BE PREDOMINANT IN THE FUTURE:

* INTEGRATION

* COMMUNICATION

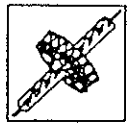

INTEGRATION

Integration of:

PUMP

+

MOTOR

+

CONTROL/ELECTRONICS

results in:

SYSTEM = "PROBLEM SOLVER"

INTEGRATION

Integration results in:

* LOWER PRICE

* SMALLER SIZE

or

* MORE FUNCTIONS / BETTER PERFORMANCE
AT THE SAME PRICE / WITHIN THE SAME SPACE

* HIGHER DEGREE OF RELIABILITY

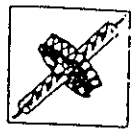

COMMUNICATION

Communication results in:

* MORE "INTELLIGENT" SYSTEMS

* POSSIBILITY OF CENTRAL CONTROL AND SURVEILLANCE

* POSSIBILITY OF OPTIMIZING OPERATING ECONOMY

* QUICK INTERVENTION IN CASE OF FAULTS

GRUNDFOS CONTROLS FOR BOOSTER SYSTEMS

For control and supervision of booster systems GRUNDFOS offers a complete range of controls, Hydro Control, covering systems from 1 to 6 pumps in the motor size area 0.55 kW - 55 kW per pump.

Hydro Control

Hydro Control is a complete pump control system used for the control and monitoring of water supply and booster systems.

Hydro Control can be used for all pumps with 2- and 4-pole AC motors, 50 and 60 Hz. Control can be made on the basis of:

- discharge pressure
- inlet pressure
- differential pressure,
- water level
- flow, direct friction loss compensation
- flow, indirect friction loss compensation.

PRODUCT DESCRIPTION

The components of Hydro Control, i.e. relays, terminal blocks, frequency converter, etc., are built into a control cabinet with a DIN-rail mounted on a bottom plate, which is also used for IP 00 execution.

Cables are led through the bottom plate of the control cabinet through relieved cable entries.

The microprocessor-controlled Delta M6 electronics unit is used for the control and monitoring of major pumping systems consisting of 1 to 6 pumps.

The EPROM software with display readings in Danish, German, English, French, Dutch, Italien and Swedish ensures optimum adaptation in case of:

- changed operating conditions,
- a need to change the input data at a later stage,
- an extension of the system.

The Delta M6 control and programming unit is placed in the front door of the control cabinet and is thus always accessible without risk of contact with live parts.

Hydro Control can be made in various variants for motor sizes from 0.55 to 55 kW.

Hydro Control is available as:

* Hydro Control CS, without Delta M6, without frequency converter,

* Hydro Control MF, with Delta M6 and frequency converter,

* Hydro Control MS, with Delta M6, without frequency converter.

Hydro Control is typically used for:

- GRUNDFOS pumps types CR, VM, SP, etc.
- other pump manufactures.

OPERATING CONDITIONS

Hydro Control has the following operating conditions:

Automatic operation

Depending on the performance required, all pumps released for operation via the Delta M6 electronics unit will be switched on and off under full alternation.

In systems with frequency converter one pump is the basic load pump, and the others are connected direct to the mains.

Manual operation

is like the automatic operation, but control outputs are to be set manually by means of the "Up" and "Down" buttons.

In systems with frequency converter the pump can be set between 0 and n x 100% (n = number of pumps).

All control functions are in operation.

Connected direct to mains

All pumps are connected direct to the mains, and operation is not controlled.

All control functions are in operation.

Test procedure

Every day at 00.10 hours all pumps not in operation are automatically tested.

In this way pumps which have not been in operation for some time are checked.

Emergency operation

Emergency operation is to be used when essential components, for instance the Delta M6 control unit, fall out.

When switching on one pump in connection with emergency operation, the power supply for the Delta M6 electronics unit is switched off.

Therefore the other pumps can only be operated via emergency operation.

OPERATION

The unit is operated by means of the push buttons, and operating status is indicated by a light-emitting diode in the relevant button and by the LCD-display.

All setting values and functions can be displayed during operation without influence on the stored values.

New values do not become active until they are stored in the memory of the electronics unit.

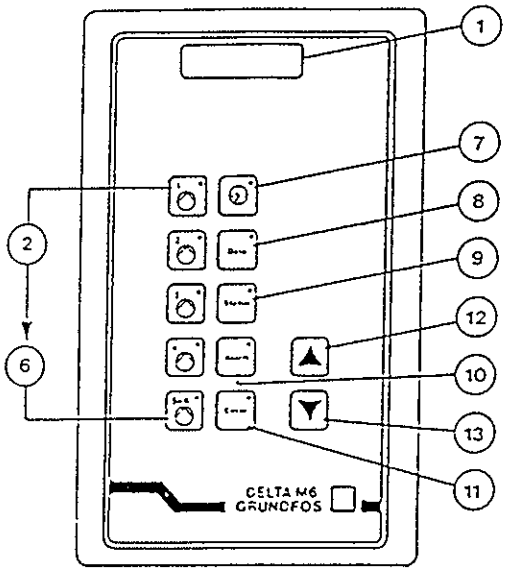

1 : LDC-display
2-6 : Pump selection buttons, pumps 1 to 6
7 : Time button
8 : Control button
9 : Button for operating status
10 : Alarm button
11 : Storing button
12-13 : Buttons for selection of actual display reading (up and down).

FUNCTION

As an example is shown a 4-pump booster system with a Hydro Control MF. The outlet pressure is monitored by a pressure transmitter, and the inlet pressure is supervised by a pressure switch.

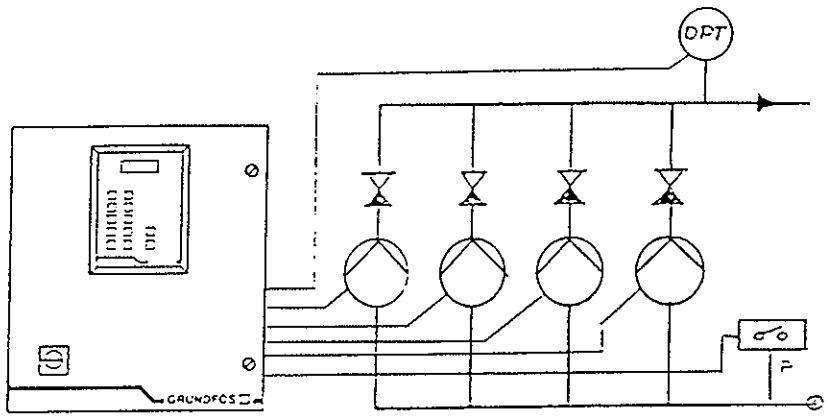

The system is controlled and monitored via the Delta M6 electronics unit.

Control follows the following principles:

Speed control of one pump on the basis of requirement; the other pumps are switched on and off as required.

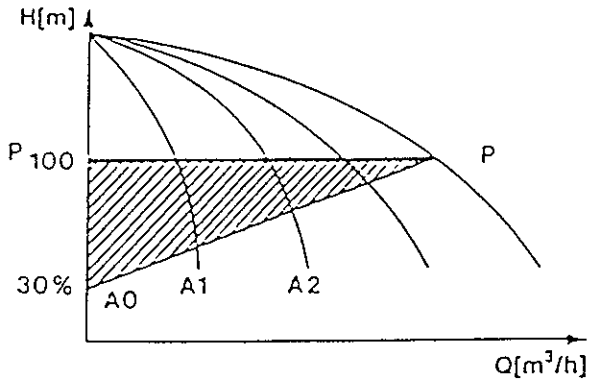

The load is distributed over all pumps of which one is controlled by a frequency converter.

The control can be performed as constant pressure, so that the pressure is kept constant on the set point (P 100) throughout the entire flow range from P 100 to P.

If so desired, Delta M6 can be adjusted for friction loss compensation in the range 100 to 30% of set point P 100 (value at max. flow) and thus perform linear compensation.

Set point curves

Three different set point curves can be set in the Delta M6 unit.

Control can be performed via the three set point curves set as constant pressure curves:

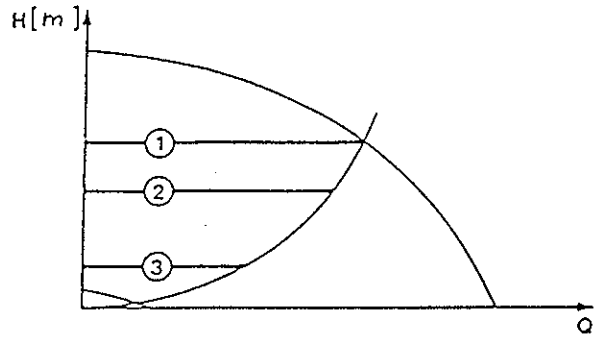

or according to three curves with the Delta M6 adjustable friction loss compensation in operation:

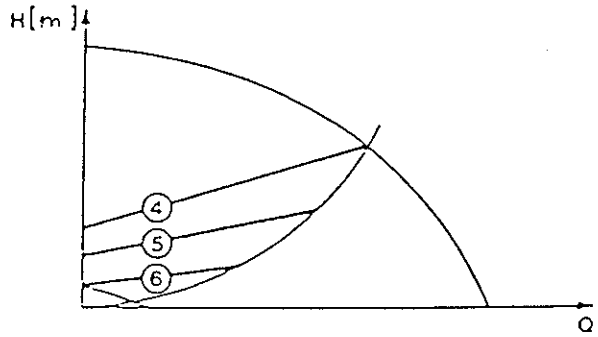

Time-controlled switch between set point curves

The set point curves can be timed so as to adapt pump operation to actual requirement in peak load situations.

Each set point curve is programable with up to 16 changing points.

Changing times can be set as hours and minutes in the cycles below:

- daily,
- Monday to Friday,
- Saturday to Sunday,
- individual weekday.

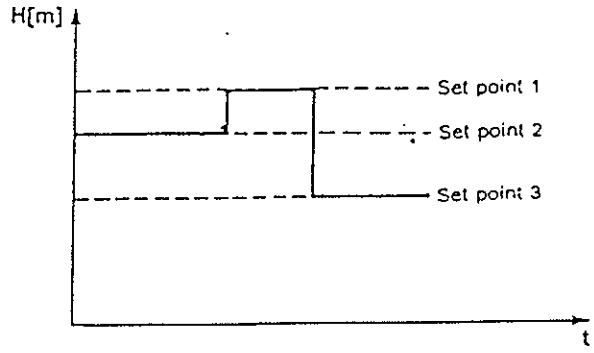

OTHER FUNCTIONS

Apart from the adjustment of pressure given by the booster system, Hydro Control also takes care of many supervision functions, and it also has a number of inputs and outputs for communication with a possible Central Control System.

The different options appear from the following section "Inputs and Outputs".

TECHNICAL DATA

Power Supply (standard):	3x200V, 3x220V, 3x380V, 3x415V, +N +PE 50/60 Hz. Other voltages as required.
Ambient temperature:	0 to +40°C
Enclosure class:	Enclosed execution: IP 54 Built-in execution: IP 00.
Radio noise filter:	According to VDE 0875 group N. (Group G from 5.5 kW)
Motor load:	Up to 55.0 kW.

Inputs and outputs

Analog inputs:

- 1 pressure transmitter, discharge side
- 1 pressure transmitter, suction side
- 1 input for analog remote setting of set point or signal from flow transmitter
- temperature measurement on each pump/motor.

Digital inputs:

- external start/stop
- input for measurement of water shortage
- motor protection of pumps connected
- frequency converter alarm
- shift to set point curve 1.

Outputs for Central Control System:

- output for alarm, potential-free on/off switch
- output for fault reading, potential-free on switch.

Options:

- output for fault reading for each individual pump, potential-free off switch
- output for RAM error, potential-free on switch.

Inputs from Central Control System:

- Set point curve 1: switch to set point curve 1 via external potential-free switch
- Remote setting of set point: external analog remote setting of set point curve
- External start/stop: external switch off of pump/pumps via potential-free switch
- Digital remote setting of set point: for instance continuously variable setting of set point by means of an external signal (e.g. from pressure switch or similar).

Delta Control

For control and supervision of pumps in heating systems GRUNDFOS is able to offer a complete range of controls covering systems from 1 to 6 pumps in motor size area from 0.55 kW to 55 kW.

APPLICATION

Delta Control is a complete pump control system used for the control and monitoring of heating, air-conditioning and ventilating systems consisting of up to 6 pumps.

Delta Control can be used for all pumps with 2- and 4-pole AC motors, 50 and 60 Hz.

Control can be carried out on the basis of:

- differential pressure,
- differential temperature,
- flow-pipe temperature,
- return-pipe temperature,
- flow, direct friction-loss compensation,
- flow, indirect friction-loss compensation,
- level,
- pressure.

PRODUCT DESCRIPTION

The components of Delta Control, i.e. relays, terminal blocks, frequency converter, etc., are built into a control cabinet with a DIN-rail mounted on a bottom plate, which is also used for IP 00 execution.

Cables are led through the bottom plate of the control cabinet through relieved cable entries.

The Delta M6 control and programming unit is placed in the front door of the control cabinet and is thus always accessible without risk of contact with live parts.

Delta Control can be made in various variants for motor sizes from 0.55 - to 55 kW.

Delta Control is available as:

- Delta Control MF, with Delta M6 and frequency converter,

- Delta Control MS, with Delta M6, without frequency converter.

Delta Control is typically used for:

- GRUNDFOS pumps, types LM/LP, NM/NP, UMT/UPT, CLM/CLP, CBM/CBP, etc.
- other pump manufactures.

Operating conditions and operation

As for Hydro Control. Please see this section.

Function

The function of Delta Control is by and large identical with Hydro Control. Only, at Delta Control there are other control parameters (see section regarding Inputs and Outputs).

TECHNICAL DATA

Power supply (standard)	3x200V, 3x220V, 3x380V,3x415V, +N +PE, 50/60 Hz Other voltages as required.
Ambient temperature:	0 to +40°C
Enclosure class:	Enclosed execution: IP 54 Built-in execution: IP 00
Radio noise filter:	According to VDE 0875, group N. (Group G from 5.5 kW)
Motor load:	Up to 55.0 kW.

INPUTS AND OUTPUTS

Analog inputs

- 1 differential pressure transmitter
- 1 flow transmitter
- 3 temperature sensors for flow-pipe, return-pipe and outdoor temperature
- 1 input for analog remote setting of set point,
- temperature measurement.

Digital inputs:

- external start/stop
- digital remote setting of set point
- temperature monitoring,
- switch to set point curve 1,
- motor protection of pumps connected (contact or thermistor function).

Outputs for Central Control System

- output for alarm, potential-free on/off-switch,
- output for fault reading, potential-free on-switch.

Options:

- output for fault reading for each individual pump, potential-free off-switch,
- output for RAM-error, potential-free on-switch.

Inputs from Central Control System:

- set point curve 1: switch to set point curve 1 via external potential- free switch,
- remote setting of set point: external, analog remote setting of set point curve,
- external start/stop: external switch-off of pump/pumps via potential-free switch,
- digital remote setting of set point: for instance continuously variable setting of set point by means of an external signal (e.g. from pressure switch or similar).