High Performance Building

- Upgrade for Efficiency

K Y Yow

Dir, Technical Center of Excellence

Climate Solutions (Asia)

Ingersoll Rand

Energy efficient HVAC systems are the key

Every Building can be a High Performance Building



By Design





Through Upgrade

Key: Energy Efficiency of HVAC System

Energy Use 

Cost 

Emissions 

Without compromising comfort or productivity

BCA ACT on ….

GREENING EXISTING BUILDINGS

Requirements :

- Mandating Min GM STD for GFA >= 15K SqM
- Permanent M&V system
- 3-Yearly Audit

Incentives :

- Co-Funding up to 3.0M (GM Gold & Above)
- Increase GM GFA
- Building Retrofit EE Financing (BREEF)

Challenges AND Opportunities

Existing Upgrade – Challenges & Opportunities

Challenges

- Budget Constraint
- Space Constraint
- Meeting GM

Opportunities

- UP Efficiency
- GM GOLD/Platinum
- Govt Incentives
- Increase Capacity
- Improve Comfort
- Improve Operation
- Optimised Space
- CSR Stewardship

Address Challenges & Capitalize Opportunities

Upgrade Options

- Change the Chiller
- Change design parameters
- Change system configuration
- Change System Type
- Enhance Controls
- Packaged Plant

1 UP Chiller Efficiency

2 Low Flow Design

3 Variable primary Flow

4 Convert from AC to WC

5 System Control Optimization

6 Packaged plant

Focus on System NOT Components

1913 TRANE 2013

Chiller Performance Improvements

Centrifugals & Screws: 62%
Smaller scrolls & recips: 41%

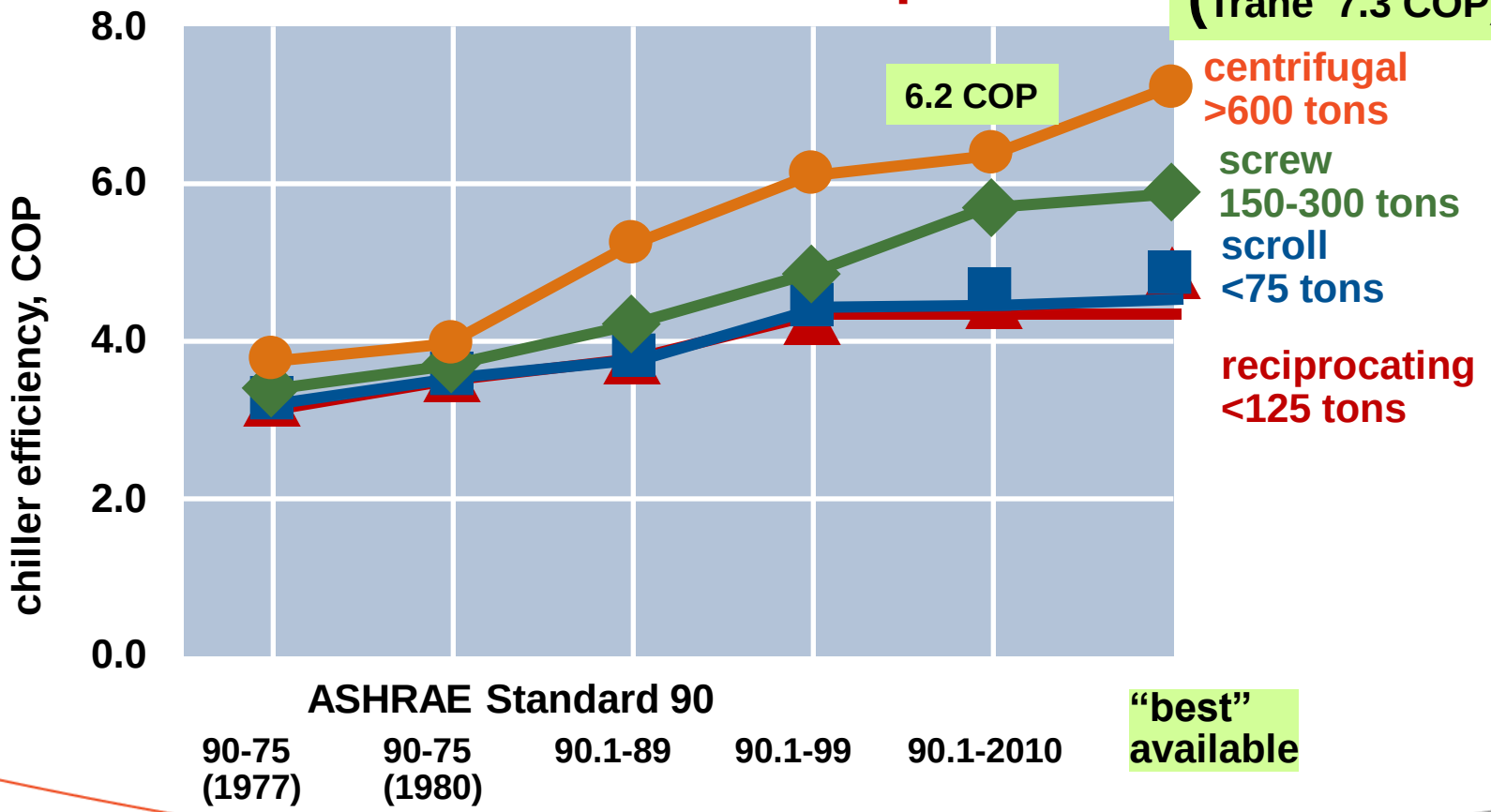

Invest in Hi-E Chillers

1913 TRANE 2013

Convert to Low Flow Design

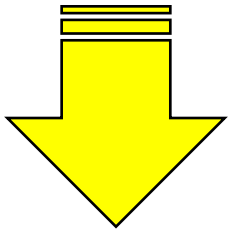

Max Utilization of Existing Infrastructure

- ✓ **Budget**
- ✓ **Space Constraint**
- ✓ **Capacity Expansion**
- ✓ **Electrical Load**

Scenario of Retrofit Challenge

- Situation
  - Chiller needs to be replaced
  - Cooling needs have increased by 50%
  - Cooling tower and pipes were replaced two years ago
  - Pipes run under the parking lot and nobody wants to dig them up!



How can I avoid piping and Tower Change-out ?

Power of Low Flow Design - Upgrading Existing Plant

- Present facility
  - 2,000 RT
  - Chilled water: 6.7C ; 5.6C ΔT
  - 4,800 gpm (302 L/S)
- Desired facility
  - 3,000 RT(50% More)

Solution ?

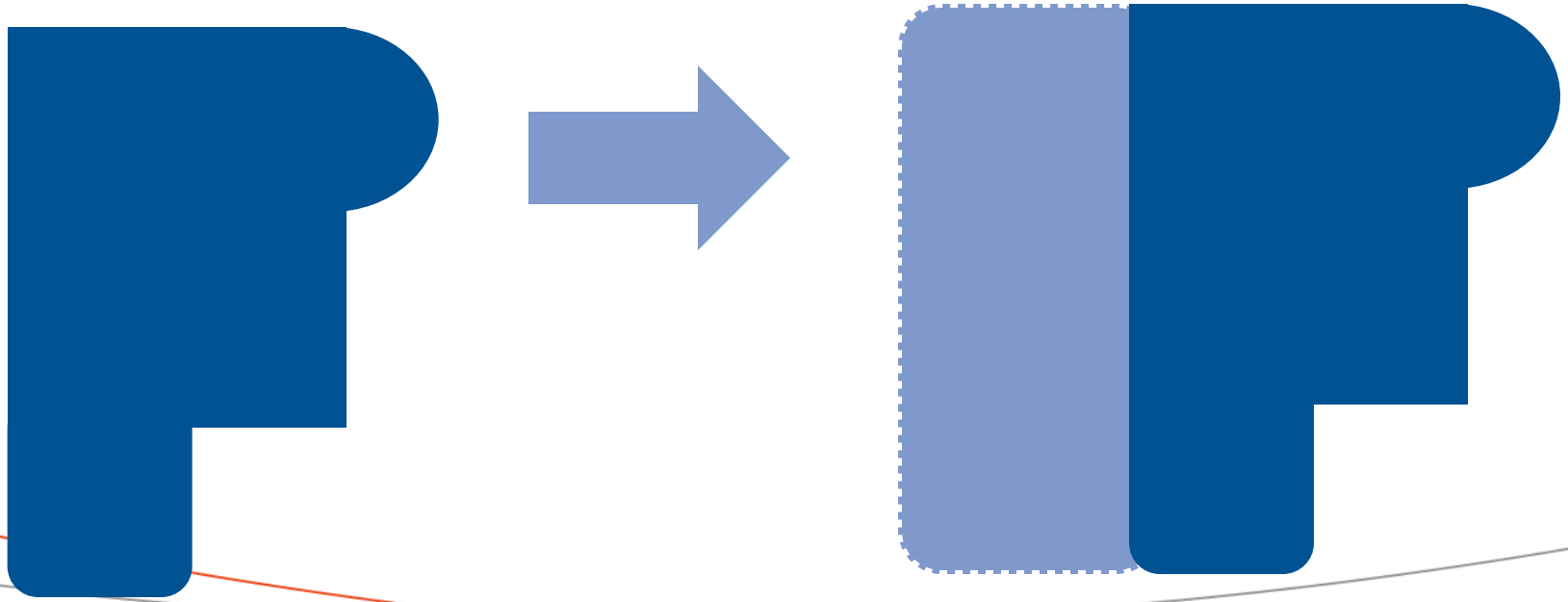

1913 TRANE 2013

Power of Low Flow Design - Upgrading Existing Plant

- Present facility
  - 2,000 tons
  - CHW: 6.7C ; 5.6C ΔT
  - 4,800 gpm
- Desired facility
  - 3,000 tons
  - CHW 4.5C, 8.4C ΔT
    - Existing coils: 2,880 gpm
    - Coils in addition: 1,920 gpm

Low Temp

Low Flow

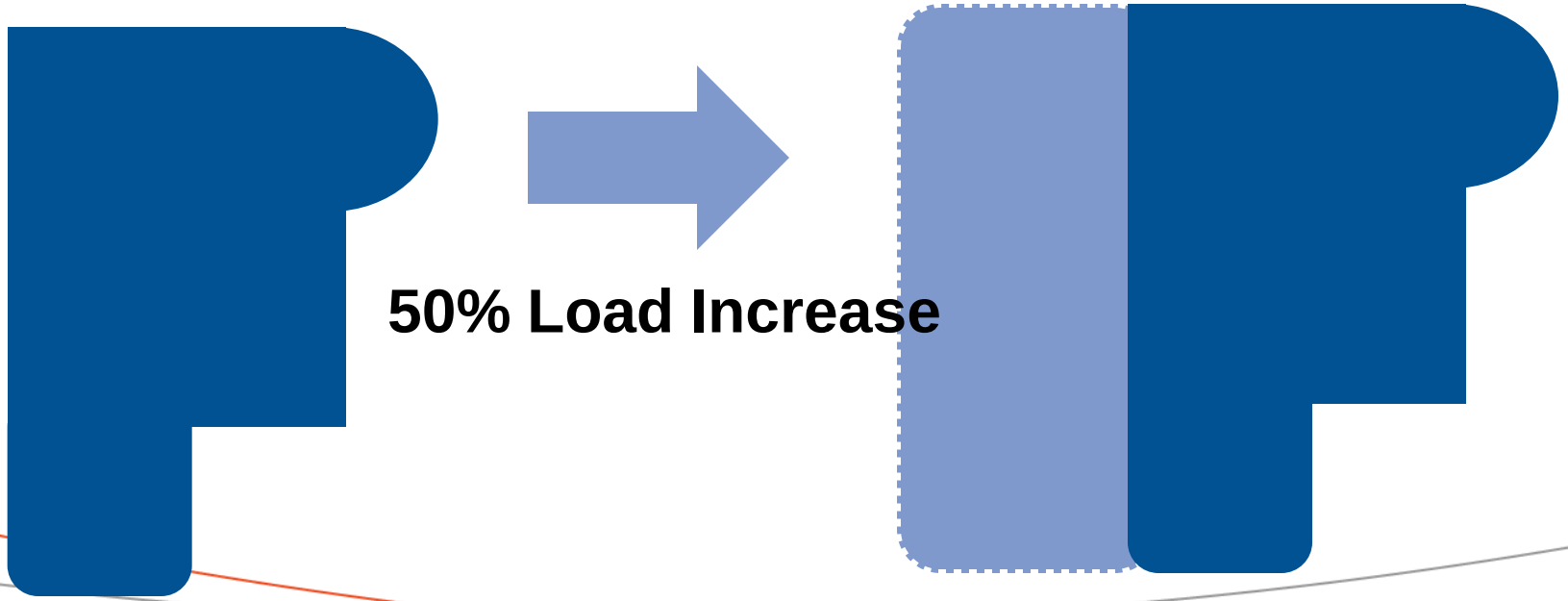

1913 TRANE 2013

Use the existing infrastructure to satisfy new requirements

Evap

Lo Flow/ Lo Temp

4.5C ΔT=8.4C

Cond

Lo Flow/ Hi Temp

30/38.5C

New Hi-E Chillers

0.60 Kw/rt =0.50 @AHRI

Use existing Pipe



Use existing Coils



Use existing Cooling Towers



Use existing pumps



Chillers upgraded to new 3000RT)

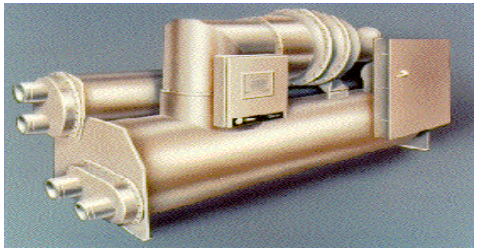

New Coils (AHUs) for additional capacity



UP Tons & EFF at Optimised cost & Space

Convert to Variable Primary Flow

- **Fewer Pumps**
- **Lower Pump KwH**

Addresses :

- ✓ **Budget**
- ✓ **Space Constraint**
- ✓ **Efficiency**
- ✓ **Low Delta T Syndrome**
  (***Low Power Factor***)

Why Consider Variable Primary Flow (VPF) Now?

- Chiller control sophistication
- Operating cost savings
  - Pump energy
  - Response to low ΔT Syndrome

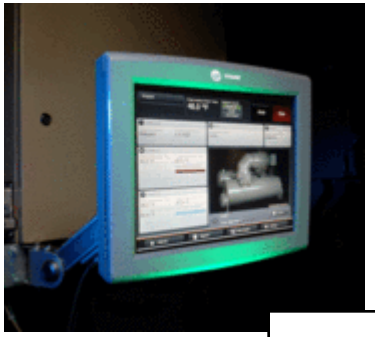

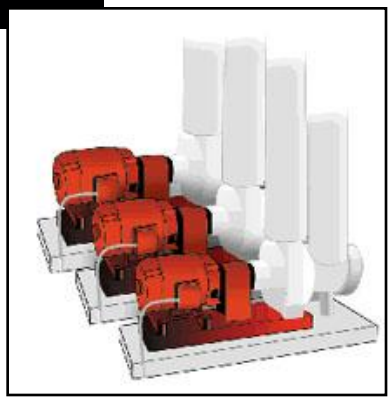

Opportunity to Save Space

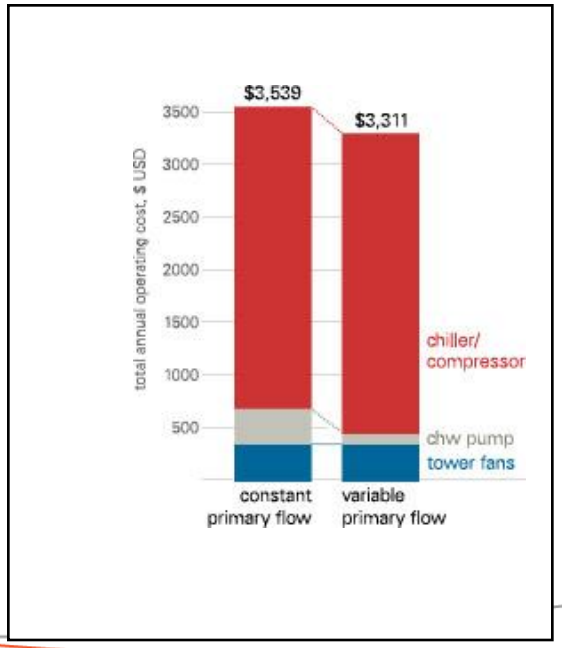

Letter to the Editor, HPAC July 2000

- *"…When we installed the new chillers we also converted the existing system from conventional primary-secondary to variable-volume-primary operation. When we did this we eliminated the 11 existing primary-secondary pumps and replaced them with four variable-volume-primary pumps.* ***Making this change allowed us to install a 1000-ton chiller in the space previously occupied by most of the 11 pumps****…'*

Colin T. Oakley, DuPage County Power Plant

Variable primary flow

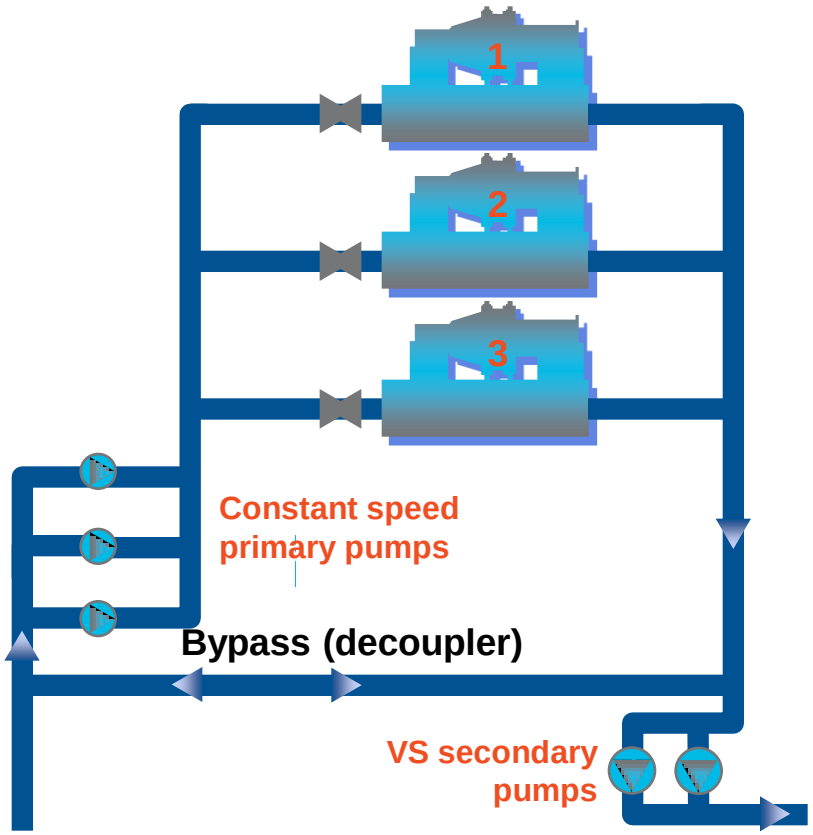

Pri-Sec Decoupled system

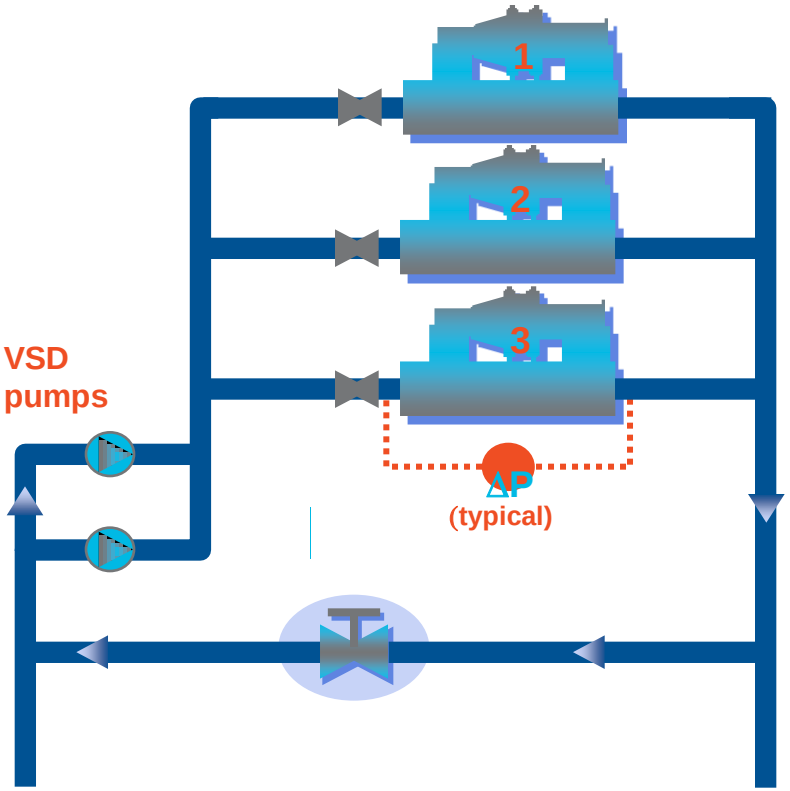

VPF System

Fewer Pumps and Optimised Flow

1913 TRANE 2013

VPF System Requirements

- Limits (consult manufacturer)
  - Absolute flows—minimum and maximum
- Always need a method to allow minimum flow (bypass)
- Flow rate changes
  - **2% of design flow per minute** not good enough
  - **10% of design flow per minute** borderline
  - **30% of design flow per minute** many comfort cooling applications
  - **50% of design flow per minute** best

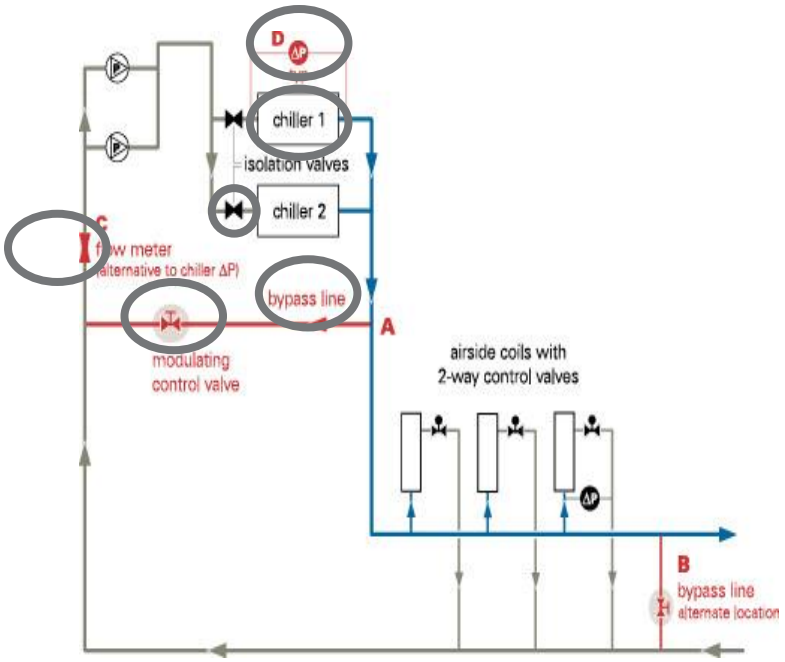

Convert to Water-cooled System

- **UP Plant Efficiency 2X**

Addresses :

- ✓ **Efficiency**
- ✓ **OD Space Constraint**

Convert from AC to WC

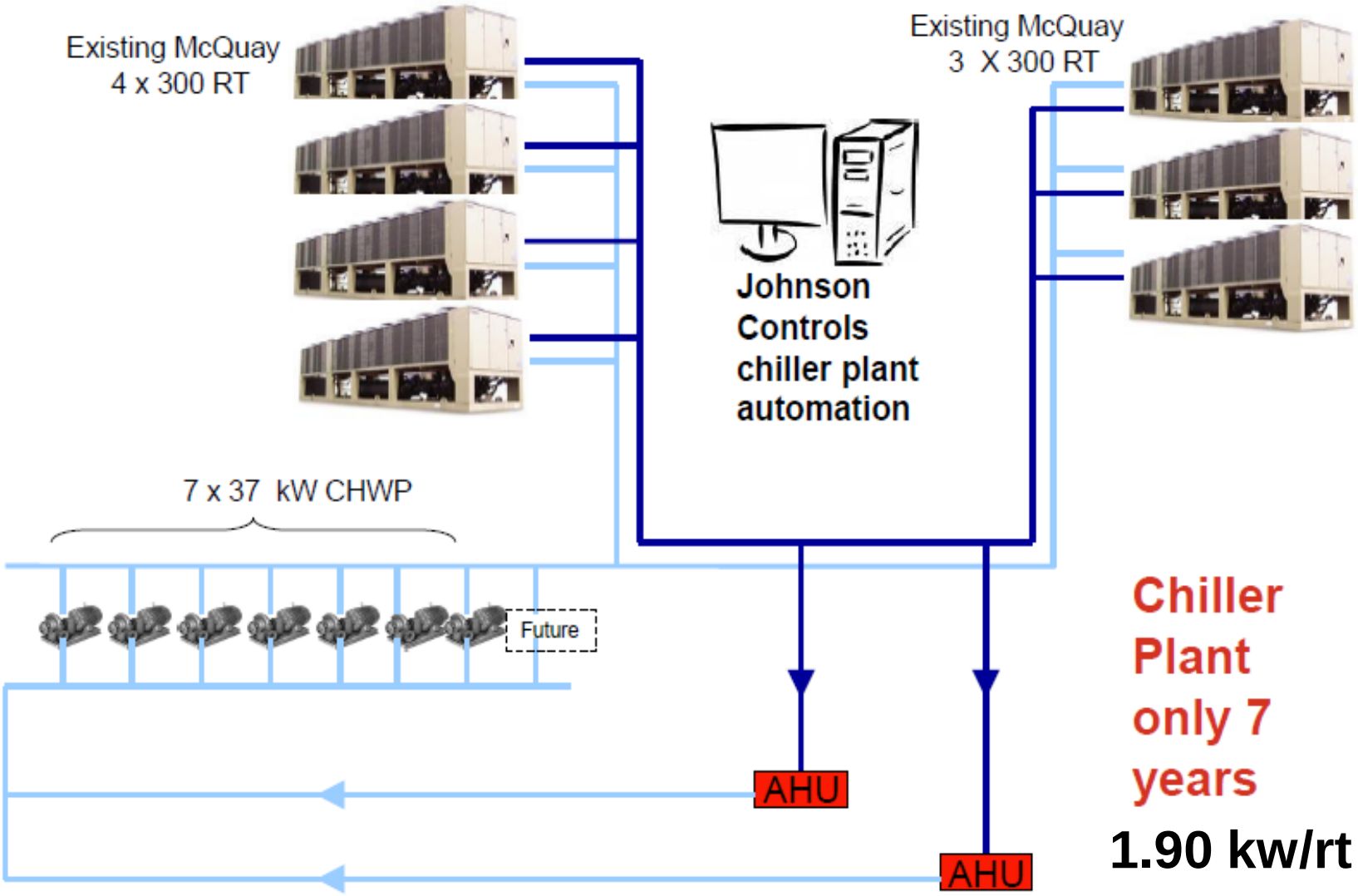

Chiller Plant only 7 years

1.90 kw/rt

Air-Cooled to water-Cooled

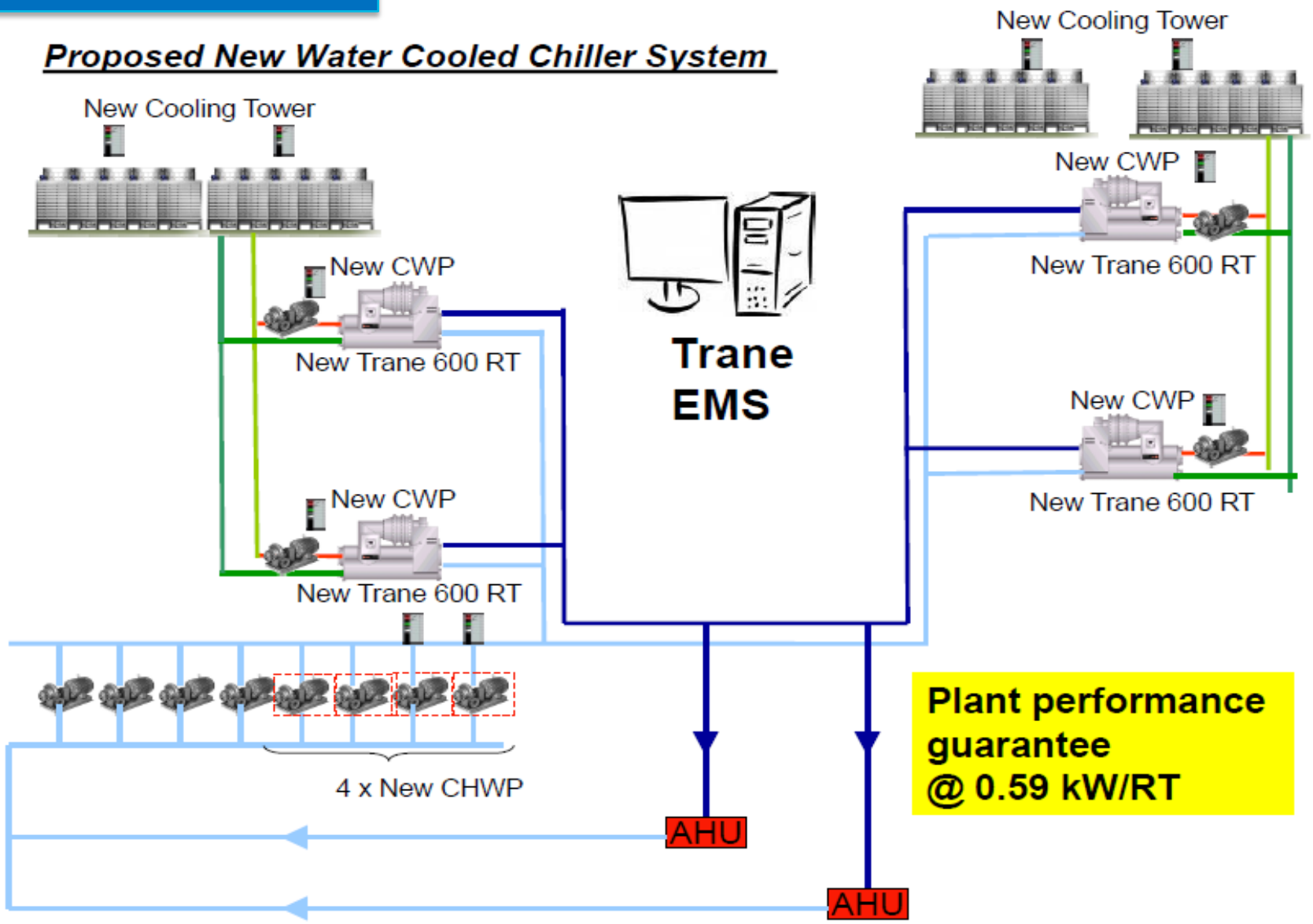

1913 TRANE 2013

WC Chiller in Outdoor Enclosure



System Controls

- Pump pressure optimization
- Chiller Sequencing
- Chiller-tower optimization
- # of towers to operate
- Variable Primary flow



Factory Packaged Solution

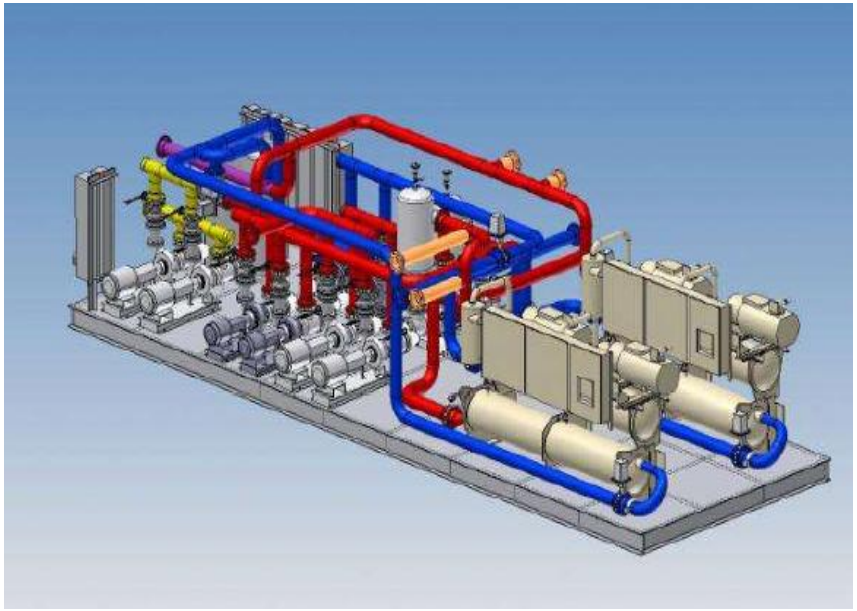

Benefits:

- ✓ Speed of Installation & Commissioning
- ✓ Single-Source Responsibility
- ✓ Save Space
- ✓ Plug & Play – Pre-tested

Modular Chiller Packaged Plant



Packaged Chiller Plant

2 X 400 Rt
VPF pumps/piping
Controls
Electrical Panel

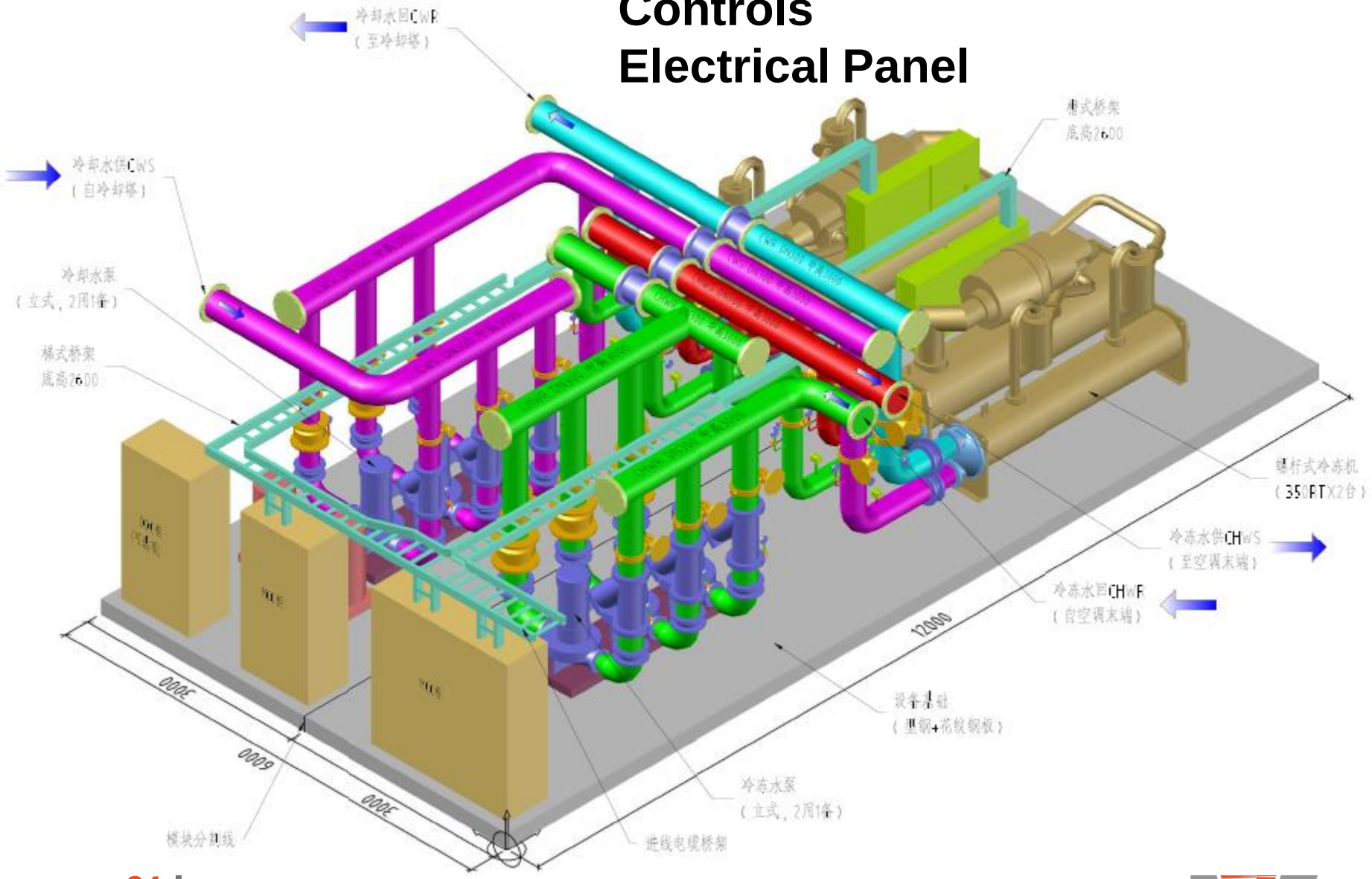

1913 TRANE 2013

Modular Chiller Plant



Trane Ice-Enhanced Air-cooled Chiller Plant

- Air-Cooled Chiller
- Ice-Tanks
- Hydraulic Module
- Controls

Benefits:

- ✓ System Integrity & Reliability
- ✓ Capacity Expansion
- ✓ Demand Charge Saving
- ✓ Rebate from Utilities Company (US)

EarthWise™ Ice-enhanced, Air-cooled Chiller Plant

EarthWise Systems deliver prepackaged operational efficiencies that support sustainable building performance—making it easy to mitigate the impact of higher energy costs.

The Trane EarthWise™ Ice-enhanced Air-cooled Chiller Plant includes eight standard configurations for air-cooled chillers, ice tanks and customizable system controls that provide an advanced starting point for designing an ice storage system.





System completion module

Lessons Learnt in Plant Retrofit

Chiller Replacement Project; How The Grand Hyatt Singapore Applied a Holistic Commercial View

by Robert Allender, MD of Energy Resources Management
HOTEL Asia Pacific columnist, October 2003

Every year for the next 15 to 20 years, the Grand Hyatt Singapore will see an additional US$700,000 in profits. That's not the gross figure – it's straight on the bottom line.

Much of the credit goes to Daniel Chong, the hotel's operations analyst, whose job it is to look at ideas designed to increase revenues and/or reduce costs.

When asked to analyse a chiller-replacement proposal, he saw what dozens of other decision-makers reading similar proposals failed to see - a commercial goldmine. GM Willi Martin and hotel manager John Beveridge also saw

GRAND HYATT SINGAPORE



Case Study

Lessons Learnt

- The problem with many systems today revolves around poor design. Mistakes continue because bad designs known to work are simply copied and seldom questioned (Source: Natural Capitalism)
- Traditional practices tend to encourage vast over-sizing of plant and electrical. The oversized plant is then a penalty on the owners as this increases the initial investment cost but also a higher ongoing cost over its operating life.
- With introduction of more accurate measuring technology and adopting a holistic approach, the new design benchmark (0.6 kW/ton) offers up to 70% improvement potential against conventional designs (Source: Factor Four).
- Optimising components in isolation without a holistic approach tends to undermine the efficiency of the whole system. We can make a system less efficient while making each of the parts more efficient by not properly linking up all the parts.
- "One-to One" replacements often do not bring about significant savings, as the system is still operating under the old design paradigm. Often this becomes a capital expenditure without an acceptable financial return.
- By upgrading the Chillers without taking into account the other parts of the cooling system (pumps, cooling towers, air-side) often means a missed opportunity to capture the total system and synergistic benefits to the fullest.
- Best Buys decisions should be based on ROI and the least life-cycle-cost. At 30% ROI, companies can improve their profits by going "green".

Lesson 1 :

The problem with many systems today revolves around poor design. Mistakes continue because bad designs known to work are simply copied and seldom questioned (source: Natural capitalism)

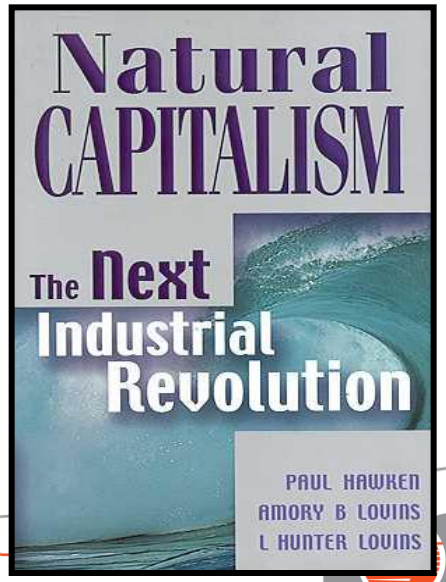

Lesson 2 :

Traditional practices tend to encourage oversizing of plant and electrical…… increase initial investment cost.

Lesson 3 :

Optimising components in isolation without a holistic approach tends to undermine the efficiency of the whole system.

Practical & Holistic Approach to Chiller Plant Optimization

Chiller

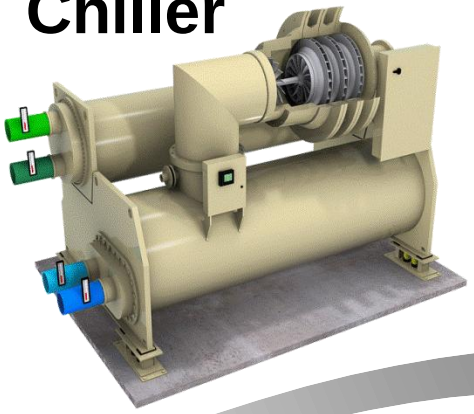

Chiiller Plant Controls

Tracer Summit

(Low Flow)

Pumps

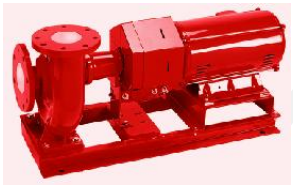

Trane
EARTHWISE
SYSTEM

Tower
Optimisation

CTO

Cooling Tower

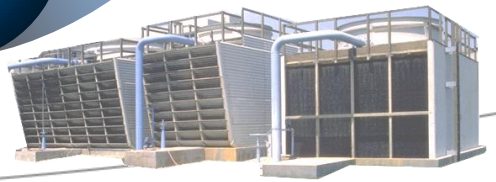

(Var Pri Flow)

VPF

1913 TRANE 2013

Lesson 4 :

Best buy decision should base on ROI (eg 30%) and least Life-Cycle cost.

GREEN = $PROFIT

40% ROI plus Other Benefits….

Case Study

Other Benefits

The improved air-conditioning plant has led to a list of other benefits, including:

- Higher Comfort Level
  Instead of conserving energy by cutting back services (i.e. service denial to its customers), the hotel has opted to improve energy efficiency. Today, the hotel has greater cooling capability but using significantly less energy.

- Improved Indoor Air Quality
  This was achieved by using very high efficient filters and a radical design in the AHUs. Humidity level has been improved to between 50% and 60% RH. At this level, the rooms are less conducive to become a breeding ground for fungi. In addition, the musky odour so often found in poorly ventilated rooms in the tropics is removed.

- Longer Life-span for Furniture and Fixtures
  At lower humidity levels, the life span of the furniture and fixtures in the guestrooms can be better maintained and prolonged.

- Fewer Maintenance Problems
  The new system design is elegantly simpler, with fewer components, no secondary pumps and therefore fewer maintenance problems. The design of the outside AHUs reduces maintenance 4 fold!

- Recovery of Commercial Space
  The original plant room was located on the basement of the hotel. During the retrofit, the plant room was relocated to the car park area. As a result, the hotel is able to recover an area close to 1,000 sq metres of GFA (gross floor area), a valuable asset, considering Hyatt's prime location.

- Corporate Responsibility - More Environmentally Friendly
  Less energy consumed simply means less CO2 emission, the cause of global warming. GEM is an economic proven methodology where companies can play a part as a good global citizen to be more environmentally friendly at "negative cost".

✓Higher Comfort
✓Improved IAQ
✓Protection of Fixtures
✓Less Maintenance
✓Increase Comm Space
✓CSR

Designing for High Performance HVAC System

- There are many good , proven practices as presented here.
- IR/Trane - A global leader dedicated to creating and sustaining safe, comfortable and efficient environments.
- Strong expertise in energy efficient HVAC equipment systems , application knowledge and comprehensive solutions.

Partner for your High Performance building

Equipment	Design	Solutions	Services
• Chillers • Air Handlers • Packaged AC/Splits • Controls	• HVAC selection • System integration • Design & layout	•Turnkey installation •Commissioning •Performance guarantees	•O&M •Monitoring, •Parts

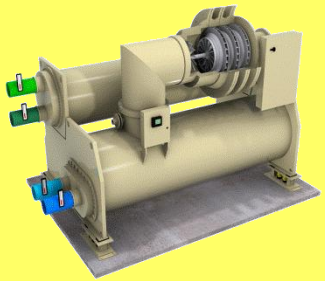







Thank you for your attention.