

**Ong Peck Seng, Iyer, LP Marketing, March 2014**

# Earth Hour – Sustainable Seminar
# Current Transformer Applications and Classifications

© ABB Group


Power and productivity
for a better world™

# Current Transformer Application and Classification
## Contents



- Introduction.
  - Current Transformers
- Definition of Current transformer
  - BS 3938 / IEC 60044-1
- Basic Components,
  - Ideal Case,
  - Real Case
- Types of current transformers
  - Duty Category
- Accuracy class
- Specification
- Current transformers demo
- Q & A.

© ABB Group

# Current Transformer Application and Classification
## Current Transformer – Introduction

- Current Transformer (CT), play a vital role in measurement and protection in AC power distribution, wrong choice of CT could end with inaccuracy and error protection.
- Many questions has been asked about the specification, what caused the errors, the accuracy and burden, etc.
- There are many types of CT, in this short presentation, we will not be able to cover all but would like to discuss on two main category of CT application, i.e. the Measurement (metering) CT and Protection CT.

© ABB Group

# Current Transformer Application and Classification
## CT Definition

- As per **BS3938:**

Current transformers are transformers for use with electrical measuring instruments and/or electrical protective devices for transformation of current in which the current in the secondary winding in normal conditions of use is substantially proportionate to the current in its primary winding by an angle which is approx. zero for an appropriate direction of the connections.

- As per **IEC60044-1:**

Current transformers are transformers for use with electrical measuring instruments and/or electrical protective devices for transformation of current in which the current in the secondary winding in normal conditions of use is substantially proportionate to the current in its primary winding by an angle which is approx. zero for an appropriate direction of the connections.

© ABB Group

# Current Transformer Application and Classification
## Basic Components

- **Primary Winding**
  - Single Turn Primary winding / Ring Type
  - Single turn is actually the bar/cable passing through the CT and the complete primary system of voltage source, cable and load.

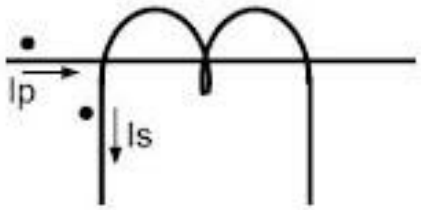


Symbol of CT

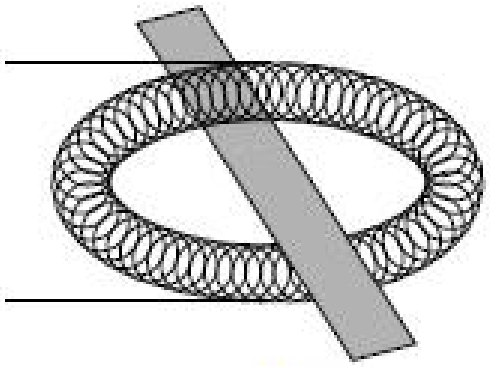

principle N1 = 1

- **Secondary Winding**
  - Multiple turns in according to the ratio of the transformer

© ABB Group

# Current Transformer Application and Classification
## Current Transformer – Ideal Case

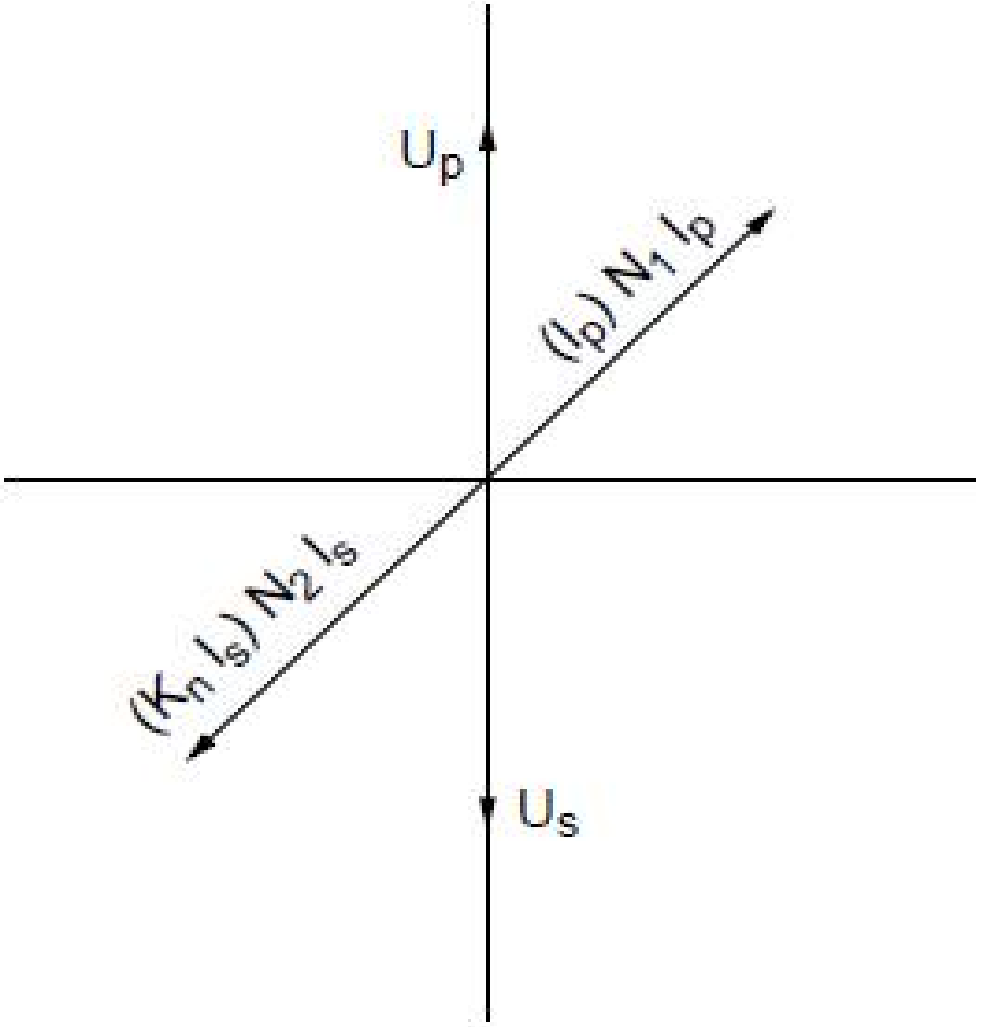


- The device is thus defined by its transformation ratio.
- The secondary current and voltage are oppositely phased to those of the primary.

$$K_n = \frac{I_{pn}}{I_{sn}} = \frac{N_2}{N_1} \quad \text{for a CT}$$

© ABB Group

# Current Transformer Application and Classification
## Current Transformer – Real Case

- Real Transformer is –
  - A perfect transformer + Losses due to internal impedances .
  - Relay, instrument or other device connected in the secondary winding is termed as the burden of CT.

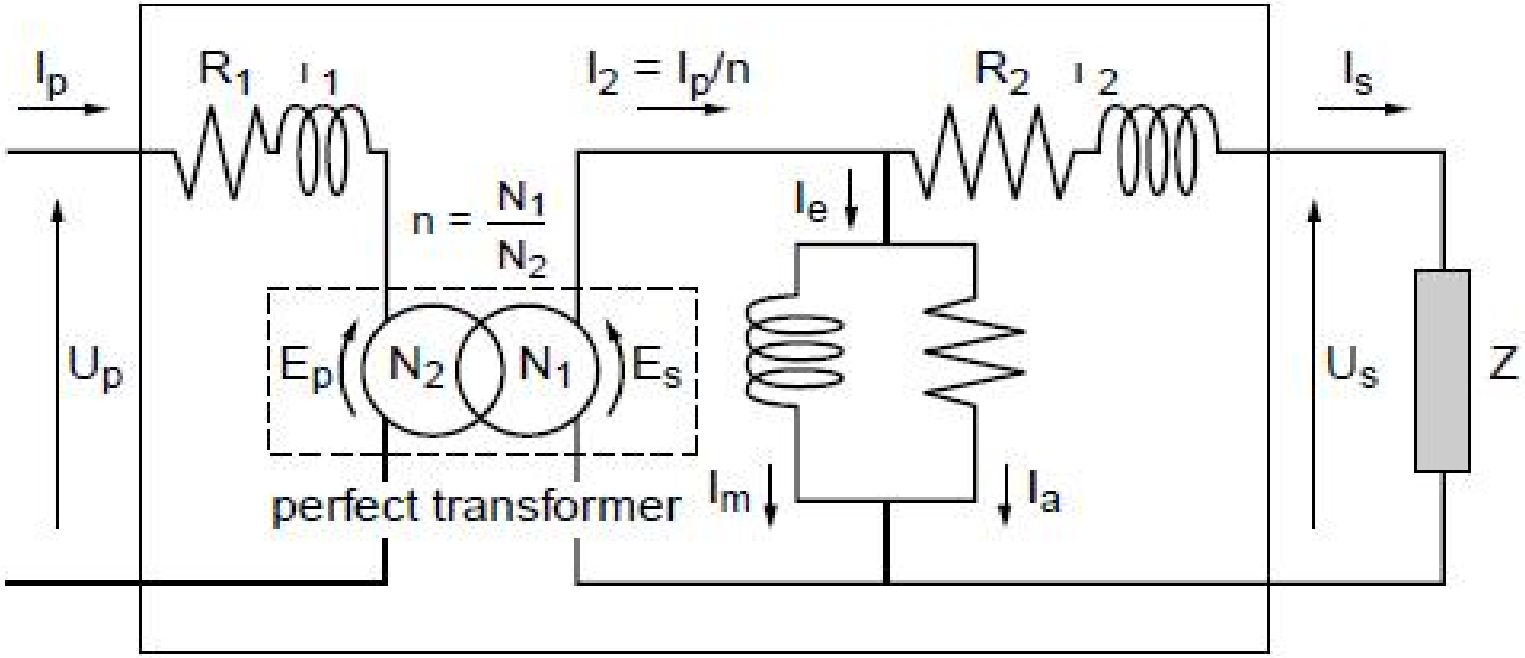


© ABB Group

# Current Transformer Application and Classification
## Current Transformer – Real Case for Metering CT

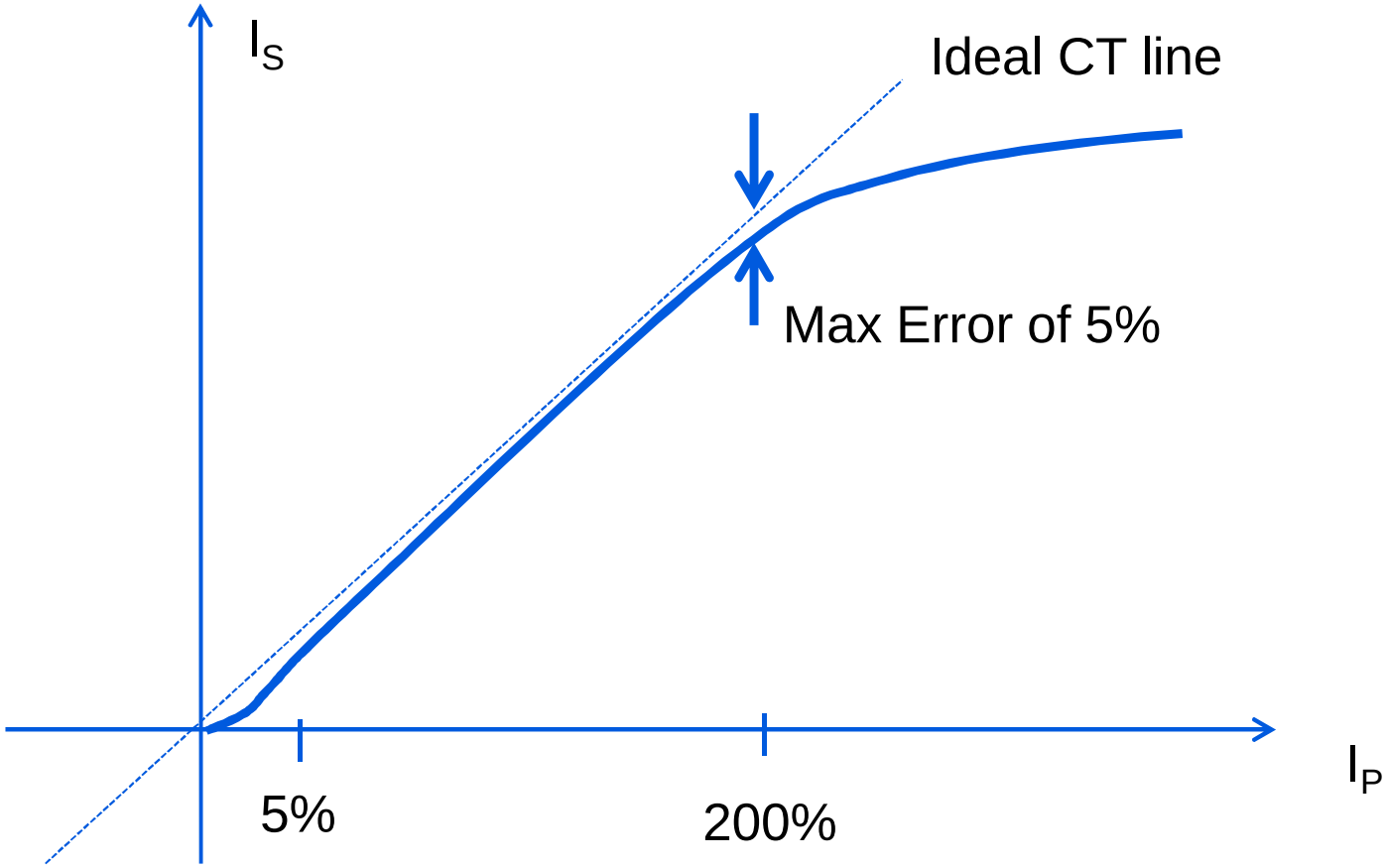


- **Metering CT**
  - E.g. Class 1.0

© ABB Group

# Current Transformer Application and Classification
## Current Transformer – Real Case for Protection CT

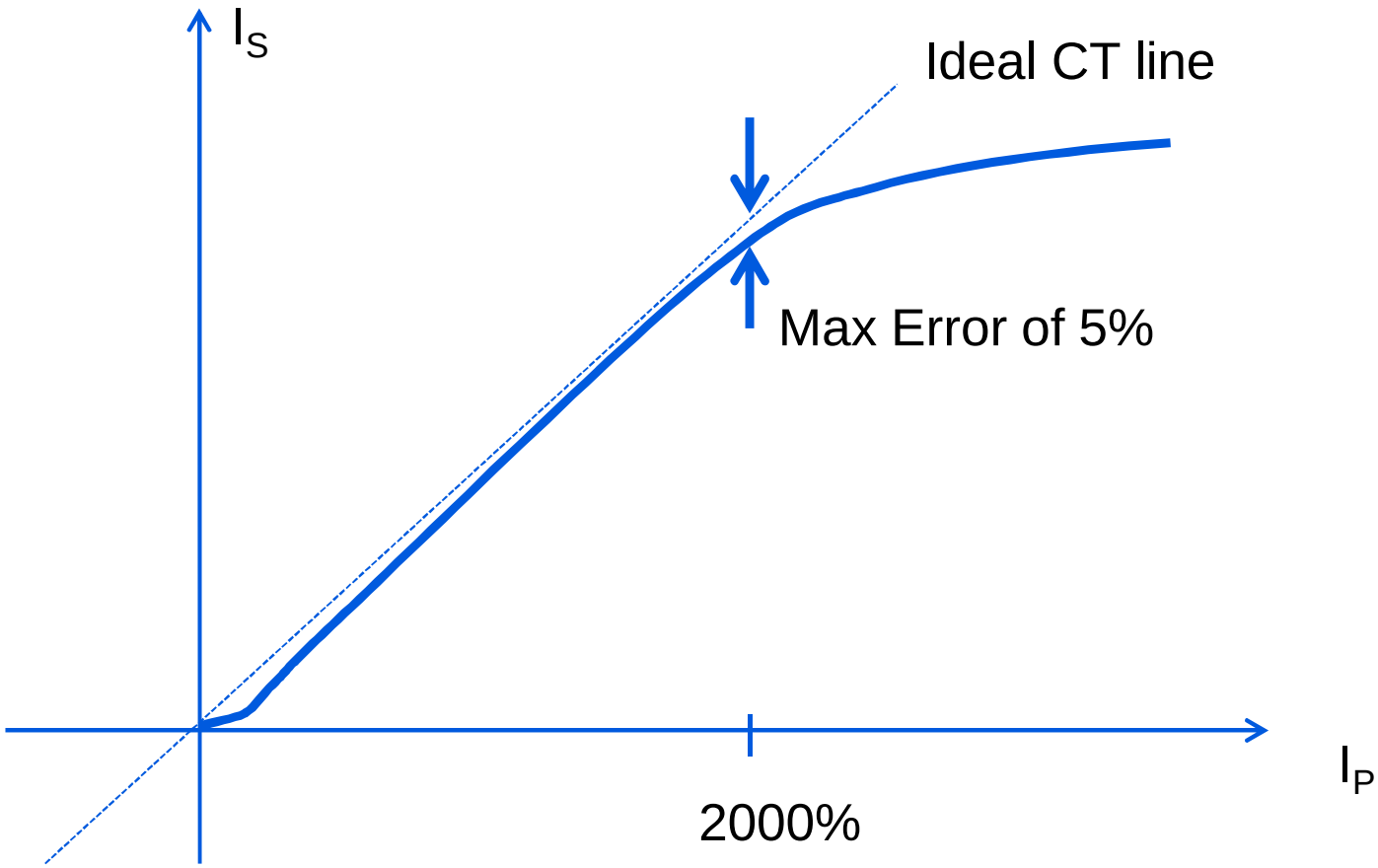


- **Protection CT**
  - 5P20

© ABB Group

# Current Transformer Application and Classification
## Primary Wiring

- **Single Turn**
  - Single Turn Primary winding /Ring Type
  - Bushing Type: The Primary becomes reduced to a copper bar moving through the secondary winding.
    - Bar primary type: it is the module's own conductors that act as the primary winding.
    - Ring type: this is a CT through LV designed to be installed on a medium voltage cable or on a passage.The latter gives the insulation

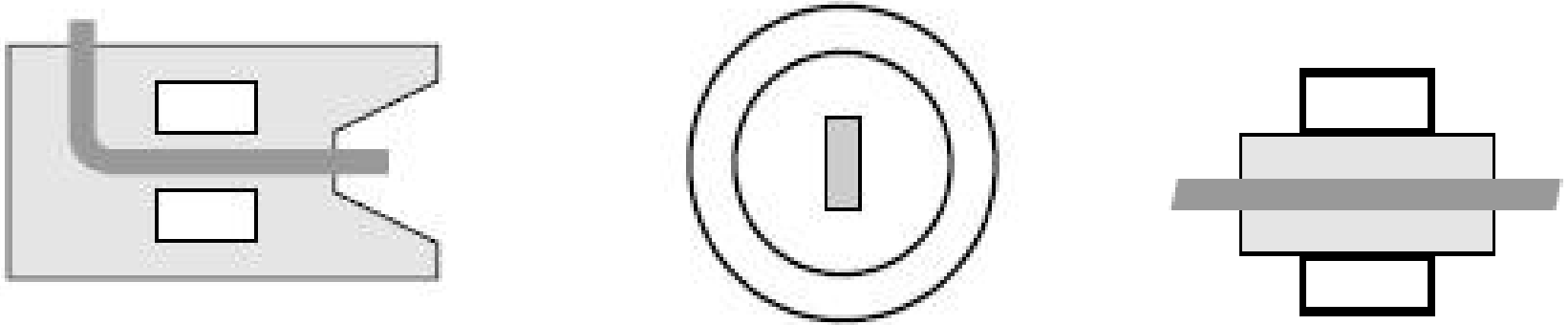

© ABB Group

# Current Transformer Application and Classification
## Primary Wiring

- **Multi- Turn Primary Winding**
  - In Multi turn primary winding , there is primary winding like secondary winding on the core but with no. of turns different from secondary winding depending on the turns ratio.

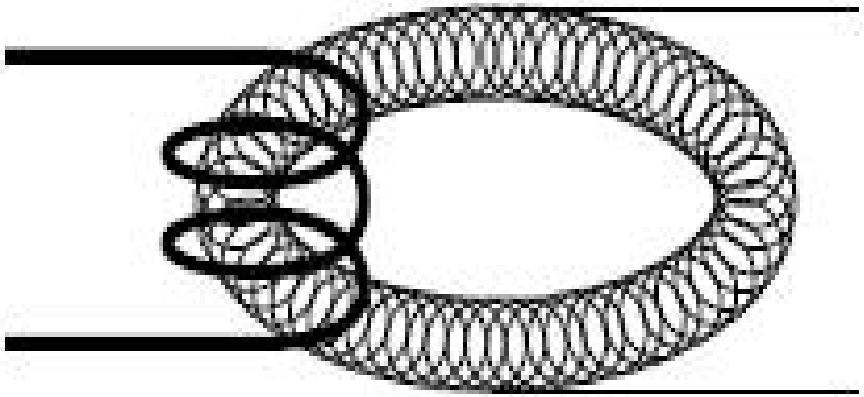

N1 > 1 winding

© ABB Group

# Current Transformer Application and Classification
## Advantages of Single Turn Primary Wiring

- Advantage of single turn primary over multi turn primary or wound primary .
  - Primary winding is subjected to the same dynamic and thermal stresses as the rest of the primary system when large short circuit current are flowing. Since in primary winding the bus-bar system which is already braced for such forces are the primary winding , the short circuit forces are already taken care of.
  - In wound primary on the other hand , this becomes more onerous or dangerous.
- Use as far as possible ring type CT. This sometimes may not be possible when the primary current is too small , where ring type will not be able to give the required burden and class.

© ABB Group

# Current Transformer Application and Classification
## Magnetic Circuit and Secondary Wiring

- **Magnetic circuit:**
  - Consists of the core, the characteristics of the core material and the type of construction determines the magnetic circuit.
- **Secondary winding :**
  - The flux density at which the core operates is a very important factor in the performance of the CT and is itself determined by the total impedance of the secondary circuit. As the secondary winding impedance is a part of the secondary circuit impedance, sometimes the dominant part, it is therefore an important design factor.

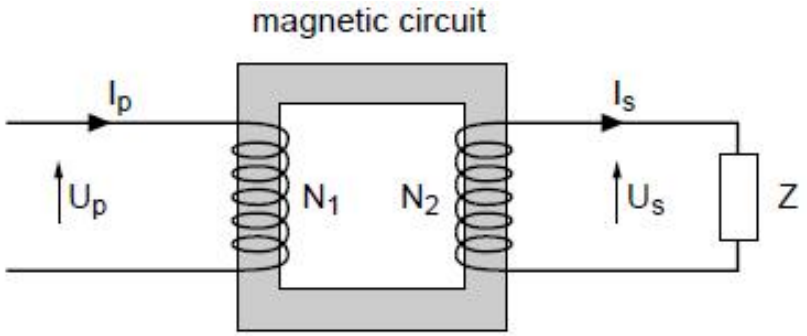


© ABB Group

# Current Transformer Application and Classification
## Basics of Current Transformer

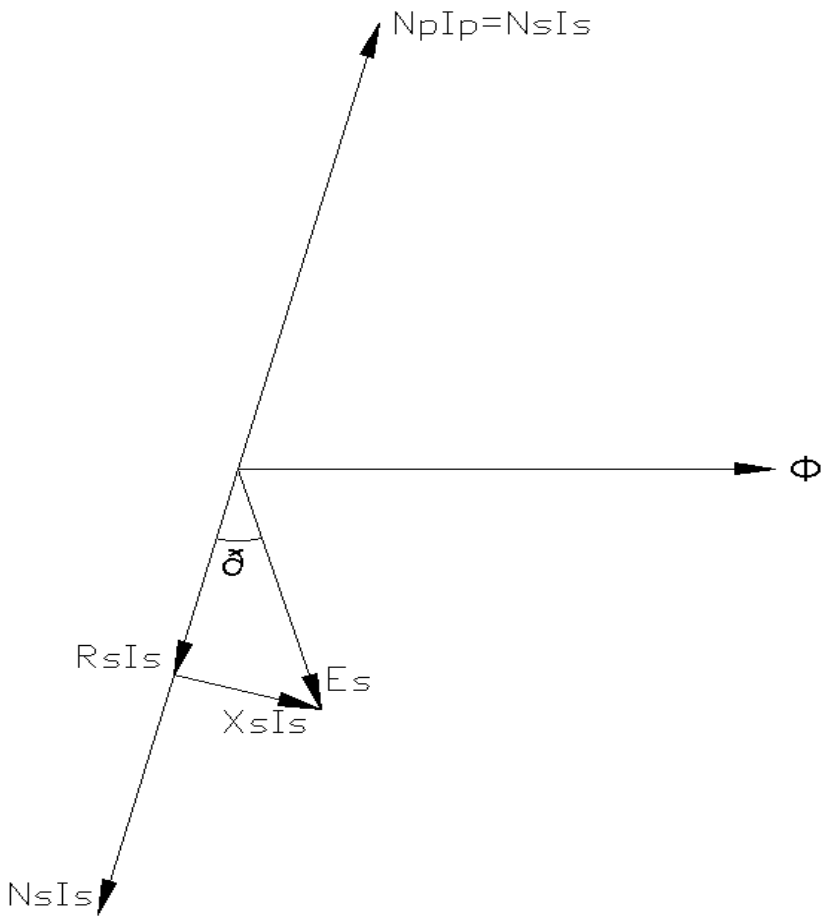


Fig 1 – Vector diagram for an ideal current transformer

.

© ABB Group

# Current Transformer Application and Classification
## Basics of Current Transformer

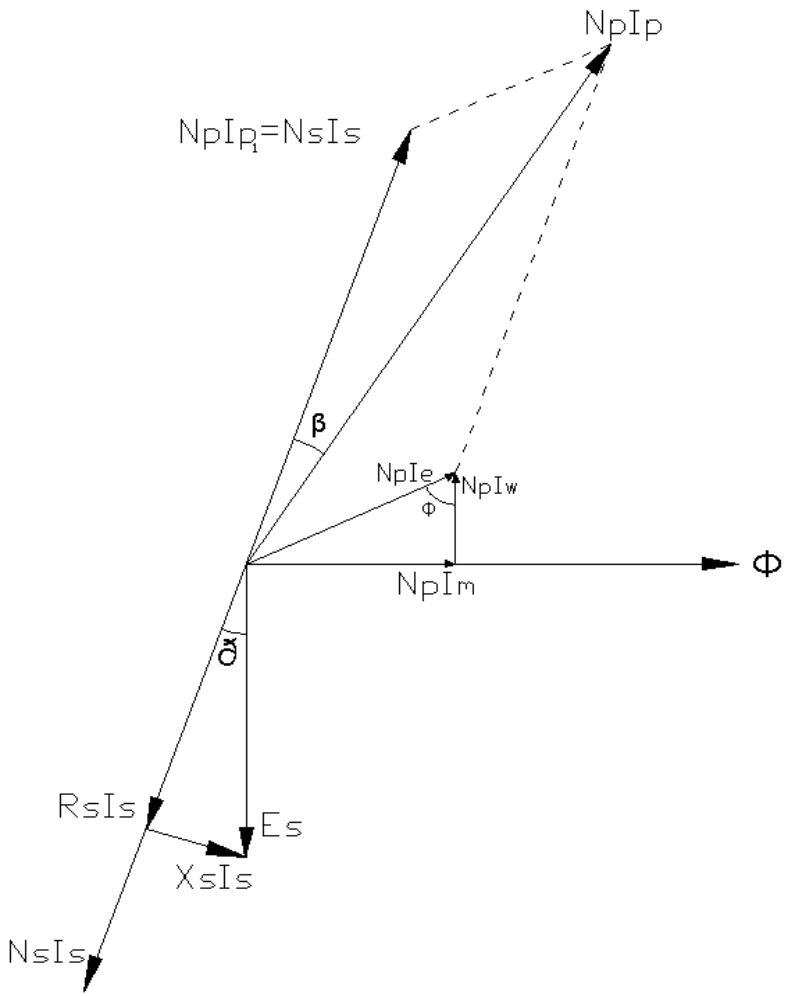


Fig 2. – Vector diagram of current transformer with overall lagging power factor secondary current.

© ABB Group

# Current Transformer Application and Classification
## Basics of Current Transformer

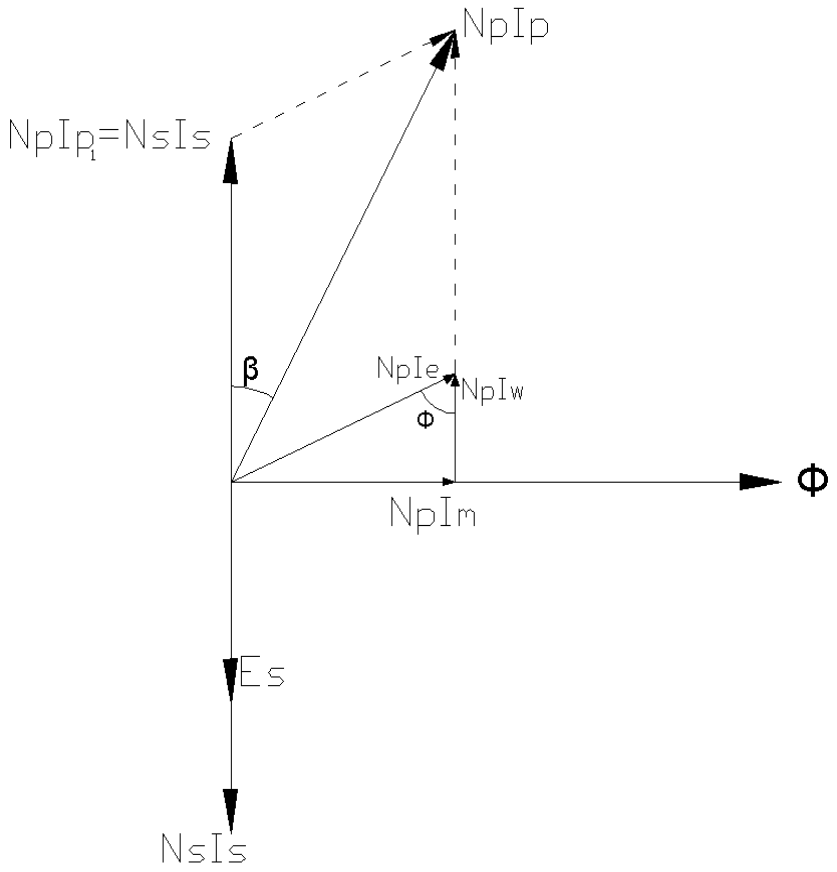


Fig 3. – Vector diagram for current transformer with unity power factor secondary current.

© ABB Group

# Current Transformer Application and Classification
## Basics of Current Transformer

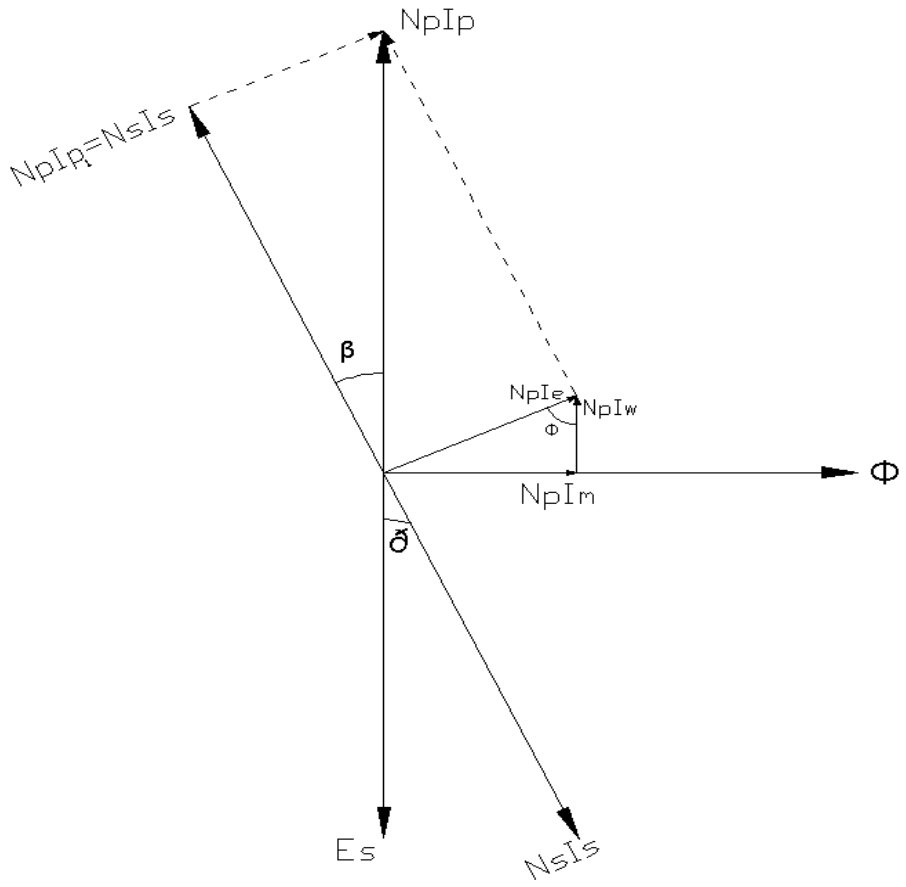


Fig 4. -- Vector diagram of current transformer with overall leading power factor secondary current.

© ABB Group

# Current Transformer Application and Classification
## Vector Diagram of Current Transformer

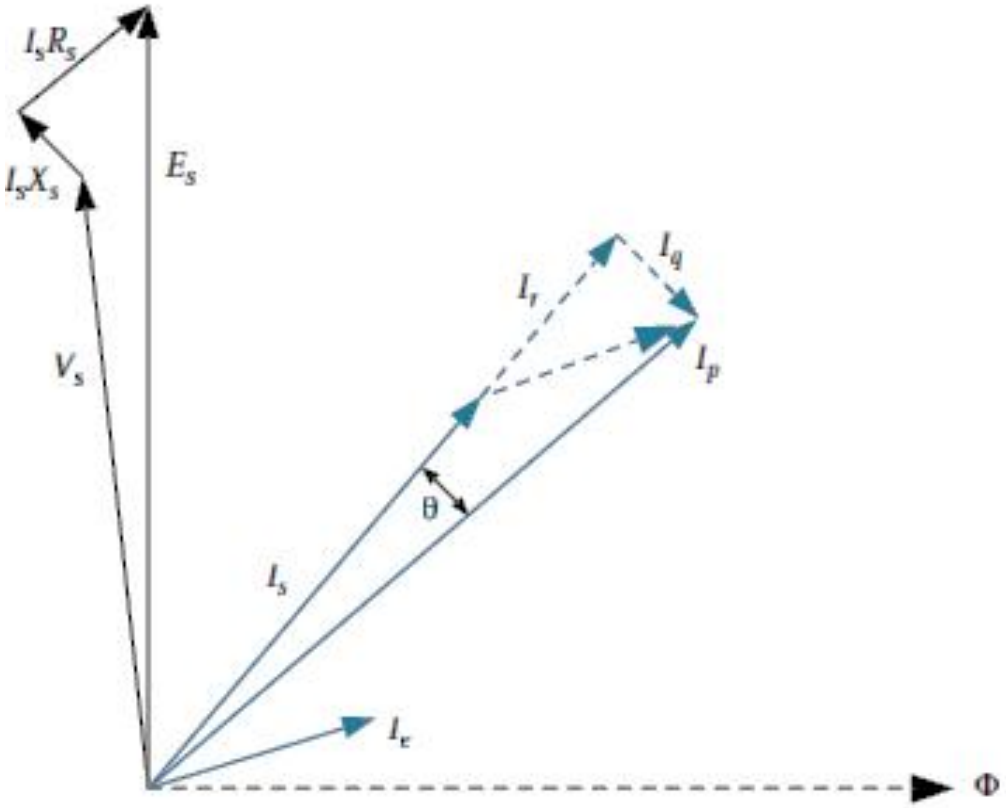


$E_s$ – Secondary induced e.m.f.
$V_s$ = Secondary output voltage
$I_p$ = Primary current
$I_s$ = Secondary current
θ = Phase angle error
Φ = Flux
$I_sR_s$ = Secondary resistance voltage drop
$I_sX_s$ = Secondary reactance voltage drop
$I_e$ = Exciting current
$I_r$ = Component of $I_e$ in phase with $I_s$
$I_q$ = Component of $I_e$ in quadrature with $I_s$

Vector Diagram of a current Transformer

© ABB Group

# Current Transformer Application and Classification
## CT Definition – Recap

- As per **BS3938:**

Current transformers are transformers for use with electrical measuring instruments and/or electrical protective devices for transformation of current in which the current in the secondary winding in normal conditions of use is substantially proportionate to the current in its primary winding by an angle which is approx. zero for an appropriate direction of the connections.

- As per **IEC60044-1:**

Current transformers are transformers for use with electrical measuring instruments and/or electrical protective devices for transformation of current in which the current in the secondary winding in normal conditions of use is substantially proportionate to the current in its primary winding by an angle which is approx. zero for an appropriate direction of the connections.

© ABB Group

# Current Transformer Application and Classification
## Duty Category

- Current Transformers can be subdivided into two main categories as per their duty requirements.
  - The first category used for metering and indicating circuits and these may be termed measuring current transformers.
  - The second category consists of current transformers used in association with protected equipments-trip coils and the like and these are termed Protective current transformers.
  - As the duty requirements are different their design are different mainly from the point of view of constructing the core.
- There are many other special CT like hall effect CT, split core CT etc., will not be discussed here.

© ABB Group

# Current Transformer Application and Classification
## **Metering** CT Requirement

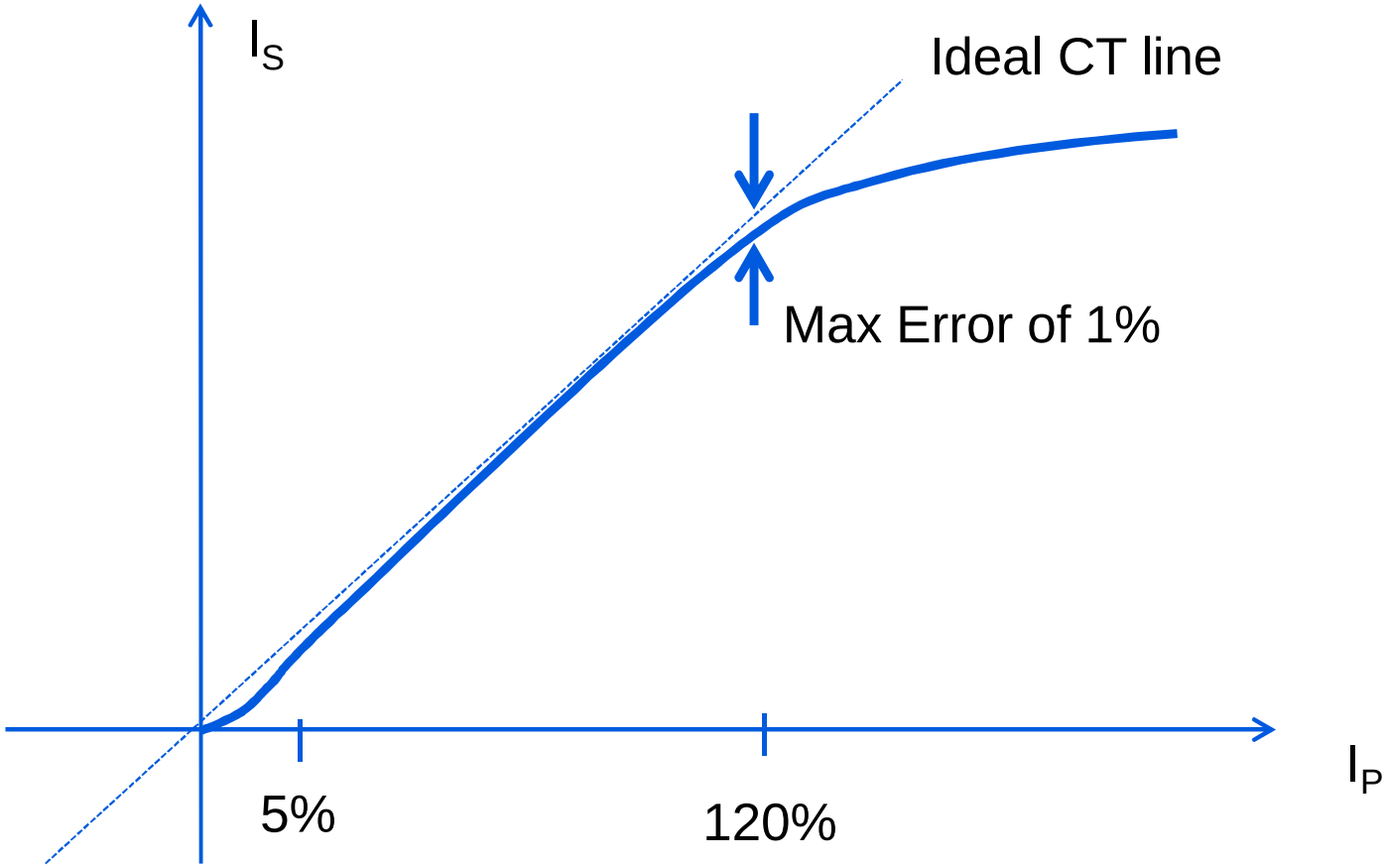


- **Metering CT**
  - E.g. Class 1.0
  - Note: not to scale for illustration purpose only

© ABB Group

# Current Transformer Application and Classification
## Recap – Real Case for **Protection** CT

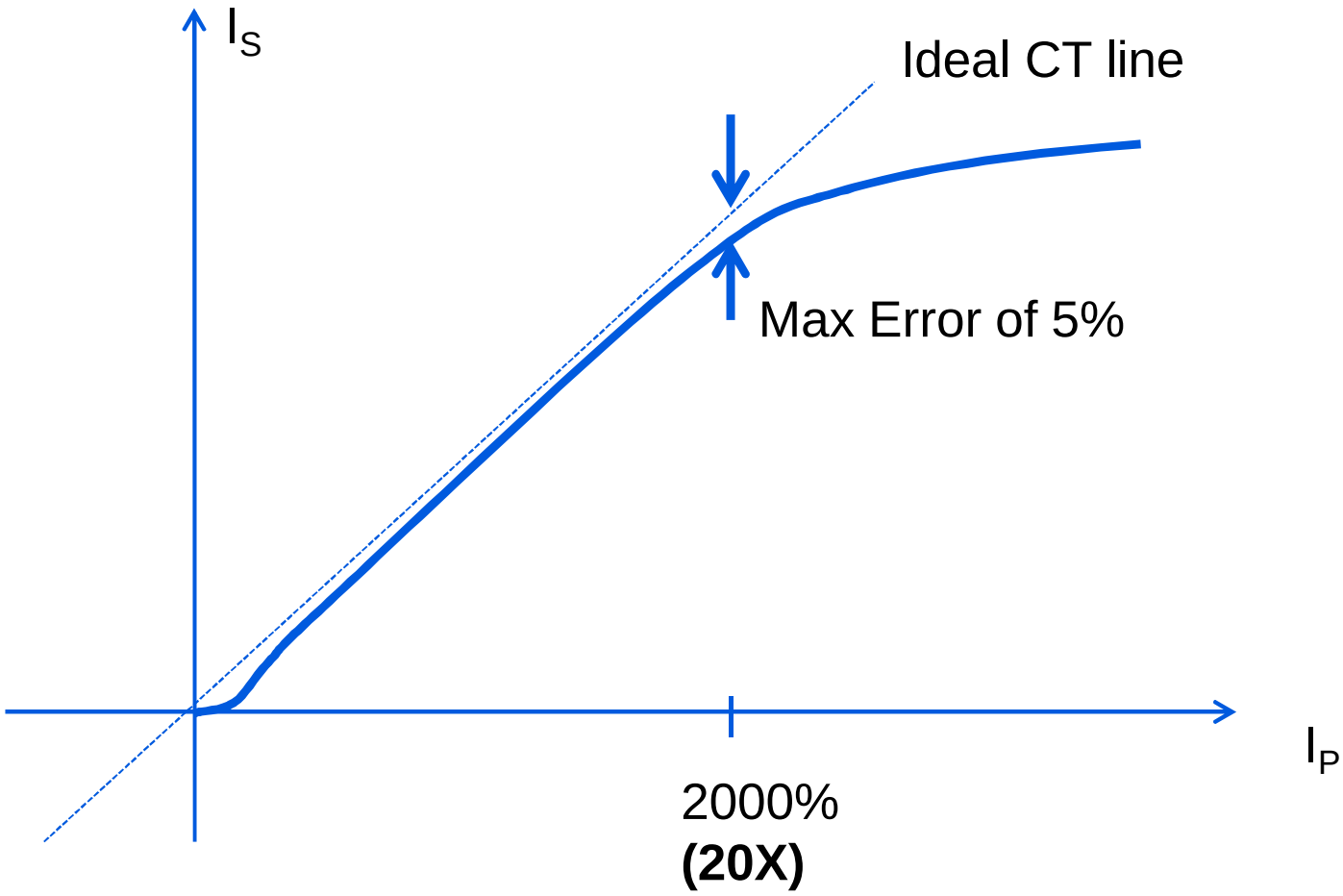


- **Protection CT**
  - 5P20
  - Note: not to scale for illustration purpose only

© ABB Group

# Current Transformer Application and Classification Trends – Current Sensor Protection CT (5P125)

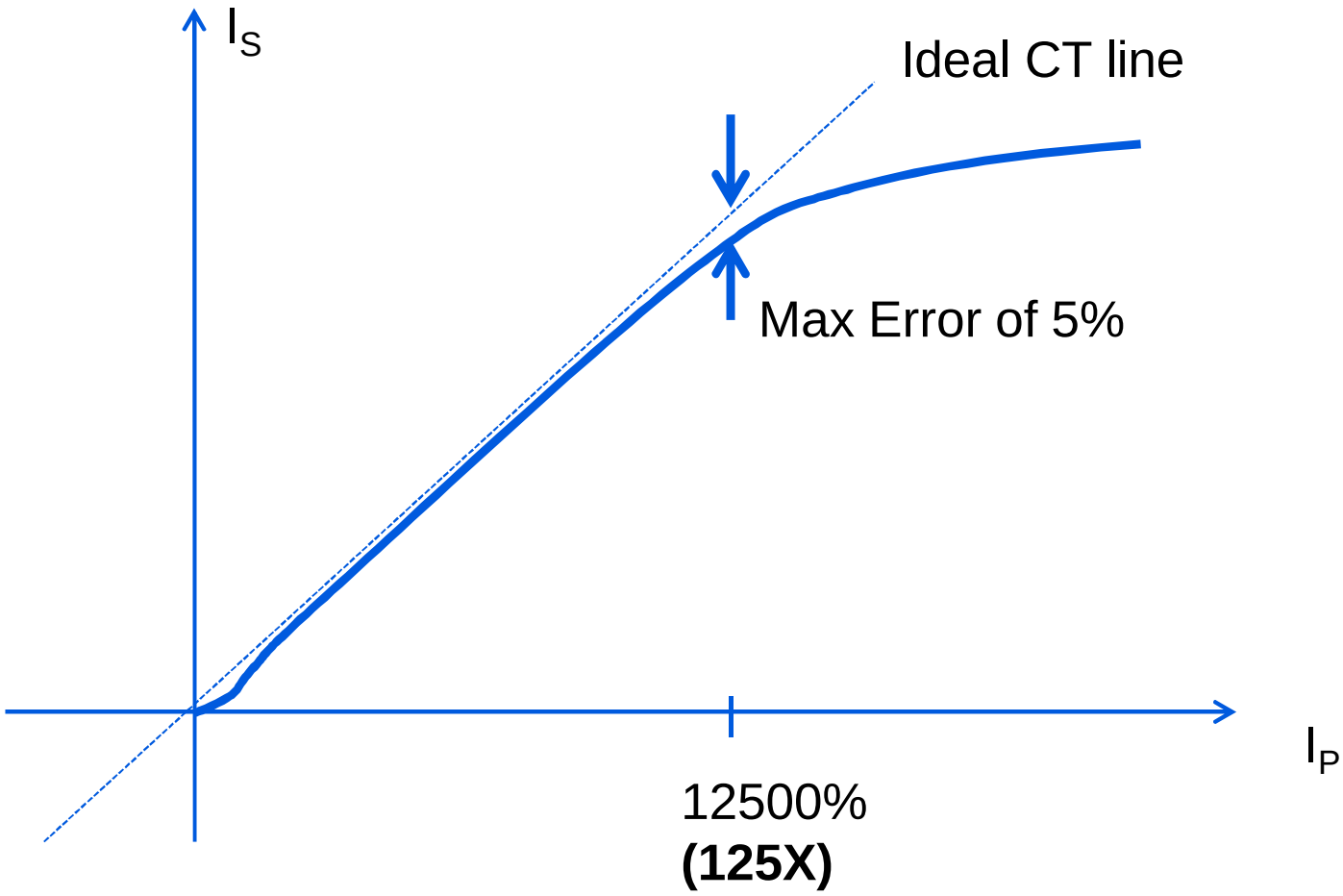


- **Protection CT (Sensor)**
  - **5P125**
  - Not to scale for illustration purpose only

© ABB Group

# Accuracy Class
# Metering Current Transformer

- In metering, we need:
  - to have an accuracy adapted to the application for the normal operational current, to protect the devices in the case of a fault current.
  - The IEC standardized accuracy classes:0.1 - 0.2 - 0.5 - 1 - 3 – 5

**Metering Code**, Electrical Market Authority of Singapore

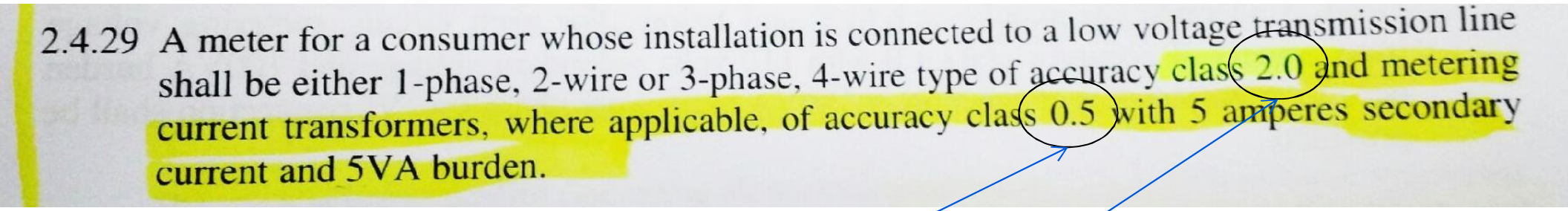


CT or PT

Meter

© ABB Group

# CT Test

| | 4 to 20% | | | 40 to 200% | | | 120 to 600% | | | 1000% (10X) | | |
|---|---|---|---|---|---|---|---|---|---|---|---|---|
| | 20A Range | | | 200A range | | | 600A Range | | | 1000A Range | | |
| Ratio Test | In | Out | Accuracy | In | Out | Accuracy | In | Out | Accuracy | | | |
| Protection CT 5P/10 | 2.143 | 0.535 | 0.999 | 21.109 | 5.277 | 1.000 | 61.650 | 15.440 | 1.0018 | | | |
| Class 1 200/5 | 2.258 | 0.561 | 0.993 | 20.428 | 5.084 | 0.995 | 61.510 | 15.316 | 0.9960 | | | |
| Class 3 200/5 | 2.143 | 0.532 | 0.994 | 20.270 | 4.981 | 0.983 | 61.920 | 15.414 | 0.9957 | | | |
| Class 1 100/5 | 2.024 | 1.006 | 0.994 | 20.350 | 10.131 | 0.996 | 64.260 | 32.003 | 0.9960 | | | |
| Class 3 100/5 | 2.134 | 1.062 | 0.996 | 20.771 | 10.350 | 0.997 | 63.980 | 31.885 | 0.9967 | | | |
| Class 1 500/5 | 2.173 | 0.216 | 0.996 | 20.885 | 2.083 | 0.997 | 64.110 | 6.396 | 0.9977 | | | |
| Class 3 500/5 | 2.206 | 0.220 | 0.996 | 20.184 | 2.014 | 0.998 | 65.230 | 6.509 | 0.9979 | | | |
| Saturation Test | In | Out | | In | Out | | In | Out | | In | Out | |
| Class 3 200/5 | 2.420 | 0.602 | 0.995 | 20.141 | 5.012 | 0.995 | 103.710 | 25.630 | 0.9885 | 201.050 | 30.178 | 0.6004 |
| Protection CT 5P/10 | 2.292 | 0.572 | 0.998 | 20.860 | 5.207 | 0.998 | 103.950 | 24.600 | 0.9466 | 200.460 | 34.903 | 0.6965 |

© ABB Group

# Accuracy Class
# Metering Current Transformer

- Limits of current error and phase displacement for measuring current transformers
- The accuracy is defined by the accuracy class which determines the permissible error in phase and in current within a range of 5 to 120% of the rated primary current.

| Accuracy class | | +/- Percentage current (ratio) error | | | | +/- Phase displacement (minutes) | | | |
|---|---|---|---|---|---|---|---|---|---|
| | % current | 5 | 20 | 100 | 120 | 5 | 20 | 100 | 120 |
| 0.1 | | 0.4 | 0.2 | 0.1 | 0.1 | 15 | 8 | 5 | 5 |
| 0.2 | | 0.75 | 0.35 | 0.2 | 0.2 | 30 | 15 | 10 | 10 |
| 0.5 | | 1.5 | 0.75 | 0.5 | 0.5 | 90 | 45 | 30 | 30 |
| 1 | | 3 | 1.5 | 1.0 | 1.0 | 180 | 90 | 60 | 60 |

(a) Limits of error accuracy for error classes 0.1 – 1.0

| Accuracy class | | +/- current (ratio) error, % | |
|---|---|---|---|
| | % current | 50 | 120 |
| 3 | | 3 | 3 |
| 5 | | 5 | 5 |

(b) Limits of error for error classes 3 and 5

| application | class |
|---|---|
| laboratory instruments precision metering | 0.2 |
| consumer metering for industrial measurements | 0.5 |
| statistical metering industrial control, ammeters, wattmeters, current recorder. | 1 |

© ABB Group

# Accuracy Class
# Protection Current Transformer

- Limits of error for protective current transformers

| Class | Current error at rated primary current (%) | Phase displacement at rated current (minutes) | Composite error at rated accuracy limit primary current (%) |
|---|---|---|---|
| 5P | +/-1 | +/-60 | 5 |
| 10P | +/-3 | | 10 |
| Standard accuracy limit factors are 5, 10, 15, 20, and 30 | | | |

© ABB Group

# Current Transformer Application and Classification
## Burden

- **Burden**
  - The relay , instrument or other device connected in the secondary winding is termed as the burden of CT.
  - If rated burden = P VA and rated secondary current =Is then ohmic impedance
- Zb= P/IsxIs

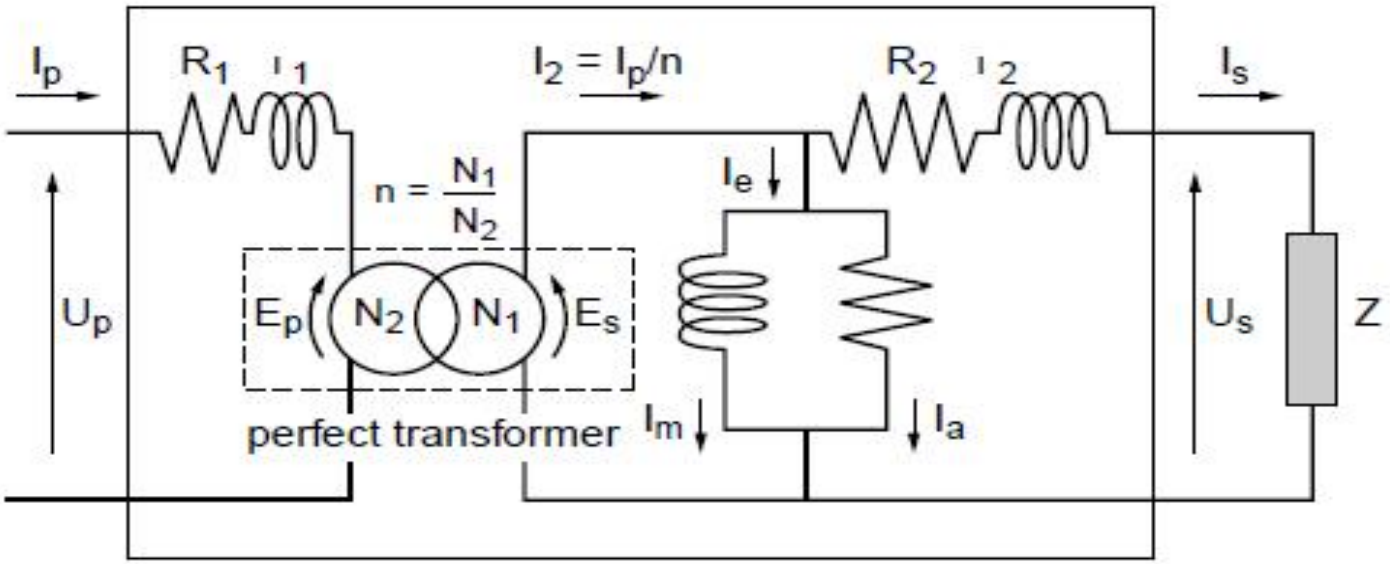


© ABB Group

# Specification Data

| Description | Standard Metering | Tariff Meter | Protection |
|---|---|---|---|
| Rated Primary Current = In | ≥ In | ≥ In | ≥ In |
| Rated secondary current | 5A | 5A | 5A |
| Rated Burden | 5VA | 5VA | **15VA** |
| Supply frequency | 50Hz | 50Hz | 50Hz |
| Required performance in the form of accuracy class | Class 1 / 3 | **Class 0.5** | **≥ 5P10 **** |
| System voltage of the primary circuit and desired insulation level which may include both power frequency and impulse withstand voltage | ≥ 1000V / 6kV | ≥ 1000V / 6kV | ≥ 1000V / 6kV |
| The rated s/c current of primary system and its duration for which the CT must be able to withstand w/o damage the associated dynamic and thermal effects. | ≥ Fault Level ($I_F$) 1 sec | ≥ Fault Level ($I_F$) 1 sec | ≥ Fault Level ($I_F$) 1 sec |
| The rated dynamic current or Idyn | ≥ $I_F$ x 1,414 | ≥ $I_F$ x 1,414 | ≥ $I_F$ x 1,414 |
| Lead cable size | ≥ 2.5 $mm^2$ | ≥ 2.5 $mm^2$ | **≥ 2.5 $mm^2$** |

© ABB Group



Iyer, Design Manager, Low Voltage Systems, Automation Products division, 19-02-2009

# Low voltage switchboard design

## Common terms and definition used for current Transformers

© ABB Group


Power and productivity for a better world™

# Basics of Current Transformer

- Assume rms current Ip in primary with secondary winding connected to burden.This will induce an alternating flux Φ in the core. This flux Φ is sufficient to induce in the secondary an emf Es again of just sufficient magnitude to pass a secondary current Is such that there is absolute equality between primary and secondary ampereturns and precise phase opposition.
- Arithmatically
- Np*Ip =Ns*Is
- Np=no. of primary turns
- Ns-no. of secondary turns.
- However the secondary winding has both resistance and leakage reactance.

© ABB Group

# Basics of Current Transformer

- Rsw =Resistance of secondary winding
- Xsw =leakage reactance of secondary winding
- Rb  =resistance of burden
- Xb=reactance of burden
- Therefore
- Zs =( Rb+Rsw)+j(Xb+Xsw)
- $Zs=V\ Rs^2 + Xs^2$
- Secondary emf Es=Zs*Is volts
- Es= Zs*Is=4.44*f*Bm*S*A*Ns
- Bm=peak flux density in weber per sq metre
- A=gross cross sectional area in sq metres
- S=core space factor , that is the ratio of net area to gross area

© ABB Group

# Basics of Current Transformer

- Maintenance of flux requires the expenditure of exciting ampere turns NpIe
- This has two components –a quadrature or magnetising component NpIm and an in phase component NpIw wattloss component NpIw.
- Thus primary ampere turns NpIp is a vector sum of two components NpIe and NpIp1. It is only NpIp1 which is transformed into secondary ampere turns.It is only this component which is equal in magnitude to the secondary ampere turns and in precise phase opposition.
- There is thus loss of equality between primary ampereturns and secondary ampereturns and also phase displacement.
- The portion which is lost is what introduces the error in the CT. What is lost actually determines the class of accuracy.

© ABB Group

# Basics of Current Transformer

- Thus there is current error or ratio error and a phase error or phase difference.These are termed as current error and phase error.
- Ip1=NsIs/Np
- Ns/Np=Ip1/Is as the turns ratio Kt
- Ip/Is as the actual current ratio Kc
- $Kc = Kt + \frac{Im \sin\delta + Iw \cos\delta}{Is}$
- Ipn=nominal primary current
- Isn=nominal secondary current
- Kn=nominal current ratio= Ipn/Isn
- % RE at Ip= ( KnIs- Ip/ Ip)100%

© ABB Group

# Polarity of Current Transformer

- When there is interconnection between the secondaries of 2 or more CT's , a knowledge of the polarity of the CT is essential.
- Polarity is a means of designating the relative instantaneous directions of the currents in the primary and secodary leads.The CT polarity is said to be correct if when the leads are so identified that the current seems to enter the primary lead and leave the secondary lead in the same direction as if the two formed a continuous circuit.
- When the current flows from P1 to P2 in the primary circuit , the current will flow from S1 to S2 through the connected burden , in this case an ammeter , if the polarity of the CT is correct.In other words ,current through the ammeter flows from P1 to P2 , exactly as if the CT were not there , the only effect of the CT being to reduce the current in the primary.

© ABB Group

# Polarity of Current Transformer

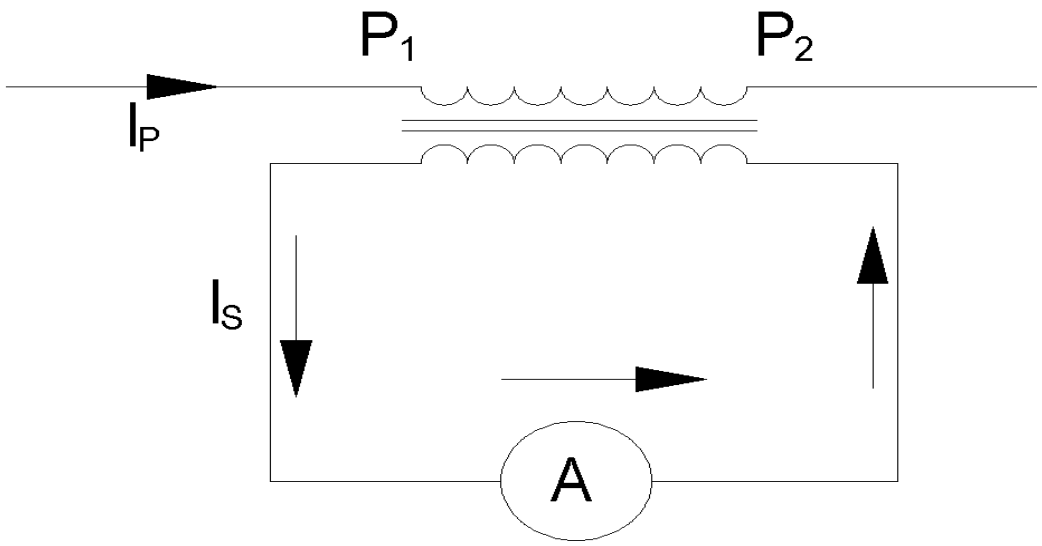


**Fig 5.**CT Polarity :Direction of current in primary and secondary winding.

© ABB Group

# Some common terms and definition as per standards

- Primary Winding: The winding through which flows the current to be transformed.
- Secondary Winding: The winding which supplies the current circuits of measuring instruments , meters relays , or similar apparatus.
- Secondary circuit :The external circuit supplied by the secondary winding of a transformer.
- Rated Primary current: The value of the primary current on which the performance of the transformer is based.
- Rated Secondary current :The value of the secondary current on which the performance of the transformer is based.
- Actual transformation ratio:The ratio of the actual primary current to the actual secondary current.
- Rated transformation ratio: The ratio of the rated primary current to the rated secondary current .
- Current error (ratio error):The error which a transformer introduces into the measurement of a current and which arises from the fact that the actual transformation ratio is not equal to the rated transformation ratio.
- The current error expressed in percent is given by the formula:
- Current error % = $\frac{(K_n I_s - I_p) \times 100}{I_p}$

© ABB Group

# Some common terms and definition as per standards

- Where Kn= rated transformation ratio
- Ip = actual primary current
- Is= actual secondary current when Ip is flowing
- Phase displacement: The difference in phase between the primary and secondary current vectors , the direction of the vectors being so chosen that the angle is zero for a perfect transformer.
- The phase displacement is said to be positive when the secondary current vector leads the primary current vector .It is usually expressed in minutes or centiradians.
- Accuracy class : A designation assigned to a current transformer the errors of which remain within specified limits under prescribed conditions of use.
- Burden : The impedance of the secondary circuit in ohms and power factor . The burden is usually expressed as the apparent power in volt amperes absorbed at a specified power factor and at the rated secondary current.

© ABB Group

# Some common terms and definition as per standards

- Rated burden : The value of the burden on which the accuracy requirements of this specifications are based.
- Rated output : The value of the apparent power in volt amperes at a specified power factor which the transformer is intended to supply to the secondary circuit at the rated secondary current and with rated burden connected to it .
- Rated short time thermal current (Ith ) : The rms value of the primary current which a transformer will withstand for one second without suffering harmful effects , the secondary winding being short circuited.
- The rated dynamic current(Idyn ): The peak value of the primary current which a transformer will withstand , without being damaged electrically or mechanically by the resulting electromagnetic forces , the secondary winding being short circuited.
- Rated continuous thermal current (Icth ): The value of the current which can be permitted to flow continuously in the primary winding , the secondary winding being connected to the rated burden , without the temp rise exceeding the specified values.
- Exciting current: The rms. value of the current taken by the secondary winding of a current transformer , when a sinusoidal voltage of rated frequency is applied to the secondary terminals , the primary and any other winding being open circuited.

© ABB Group

# Some common terms and definition as per standards

- Rated Resistive burden(Rb):The rated value of the secondary connected resistive burden in ohms.
- Secondary Winding resistance(Rct): Secondary winding DC resistance in ohms correcte dto 75deg C or such other temp as may be specified.
- Composite error: The difference between the instantaneous value of the primary current and the instantaneous value of the secondary current multiplied by the transformation ratio.
- Measuring current ransformer:A current transformer intended to supply indicating instruments , integrating meters and similar apparatus.
- Rated instrument limit primary current (IPL):The value of the minimum primary current at which the composite error of the measuring current transformer is equal or greater than 10 % , the secondary burden being equal to the rated burden. The composite error should be greater than 10% in order to protect the apparatus supplied by the CT against high currents produced in the event of system fault.
- Instrument security Factor(FS): The ratio of the rated instrument limit primary current to the rated primary current.
- Secondary limiting e.m.f.:The product of the ISF , the rated secondary current and the vectorial sum of the rated burden and the impedance of the secondary winding.

© ABB Group

# Some common terms and definition as per standards

- Protective current transformer:A current transformer intended to supply protective relays.
- Rated Accuracy limit primary current: The value of the primary current up to which the transformer will comply with the requirements for composite error.
- Accuracy limit factor : The ratio of the rated accuracy limit primary current to the rated primary current.
- Secondary limiting e.mf.:The product of the accuracy limit factor , the rated secondary current and the vectorial sum of the rated burden and the impedance of the secondary winding.

© ABB Group

# Some common terms and definition as per standards

- Rated Knee point emf: That minimum sinusoidal e.m.f. (r.m.s.) at rated power frequency when applied to the secondary terminals of the transformer, all other terminals being open–circuited, which when increased by 10% causes the r.m.s. exciting current to increase by no more than 50%.

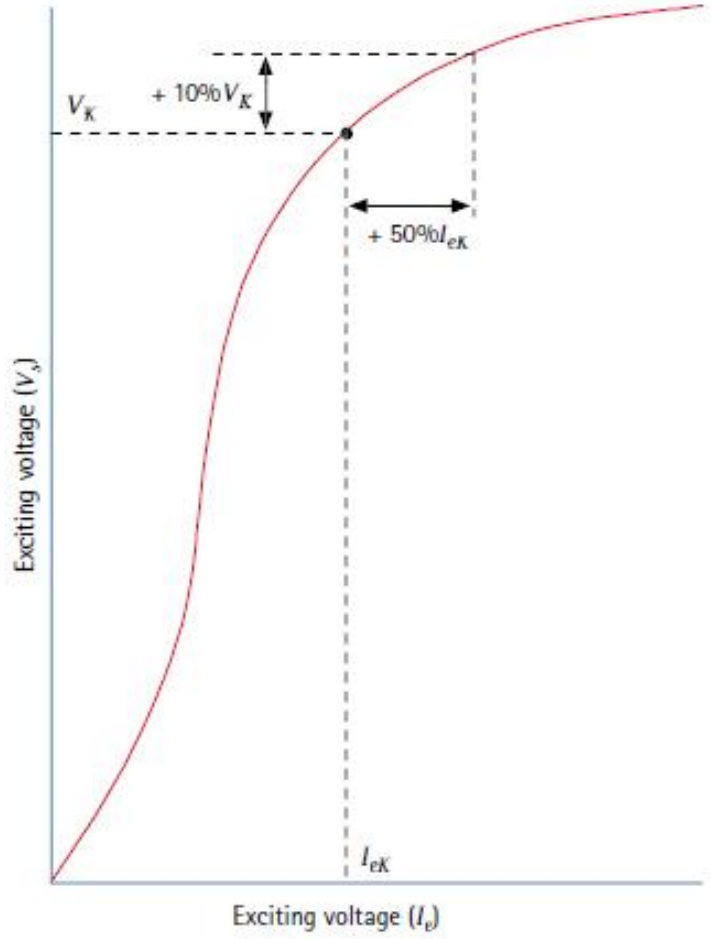


© ABB Group



Iyer, Design Manager, Low Voltage Systems, Automation Products division, 19-02-2009

# Low voltage switchboard design

## Accuracy Class for current Transformers

© ABB Group


Power and productivity
for a better world™

# Accuracy Class

- The accuracy class depends on the forseen use of the current transformer:
  - Accuracy class for metering,
  - Accuracy class for protection.

© ABB Group

# Accuracy Class
# Metering Current Transformer

- The protection of metering devices in the case of a fault is defined by the safety factor -**instrument security factor (FS)**
- Rated instrument limit primary current (IPL*)* is the value of the minimum primary current at which the composite error of the measuring current transformer is equal to or greater than 10 %, the secondary burden being equal to the rated burden.
- Instrument security factor (FS) is the ratio of rated instrument limit primary current to the rated primary current Ipl/Ipn. Preferred values are 5 and 10.

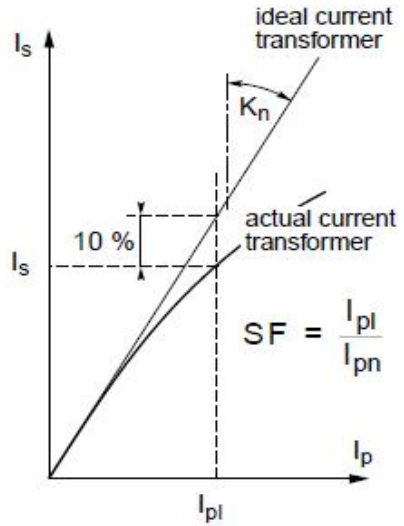


© ABB Group

# Accuracy Class
# Protection Current Transformer

- In Protection, we need:
  - to have an accuracy limit factor and an accuracy class adapted to the application.
  - The accuracy limit factor is the ratio between the accuracy limit current for which the error is guaranteed less than 5 to 10 % depending on whether the accuracy class is 5P or 10P.
  - The larger the ALF is the less likely the device will become saturated.

© ABB Group

# Accuracy Class
# Protection Current Transformer- Class PX

- **class PX protective current transformer**
- a transformer of low leakage reactance for which knowledge of the transformer secondary excitation characteristic, secondary winding resistance, secondary burden resistance and turns ratio is sufficient to assess its performance in relation to the protective relay system with which it is to be used.
- **rated knee point e.m.f. (*Ek)***
- that minimum sinusoidal e.m.f. (r.m.s.) at rated power frequency when applied to the secondary terminals of the transformer, all other terminals being open-circuited, which when increased by 10 % causes the r.m.s. exciting current to increase by no more than 50 %.

© ABB Group

# Accuracy Class
# Protection Current Transformer- Class PX

- Class PX CT used in balance protection or differential Protection .
- Class PX CT are defined by
  - the rated secondary current
  - the minimum knee point voltage
  - maximum resistance of the CT secondary winding corrected to 75deg C
  - maximum magnetizing current at the rated knee point voltage.

© ABB Group

# Accuracy Class
# Protection Current Transformer- Class PX

- Balance system of Protection

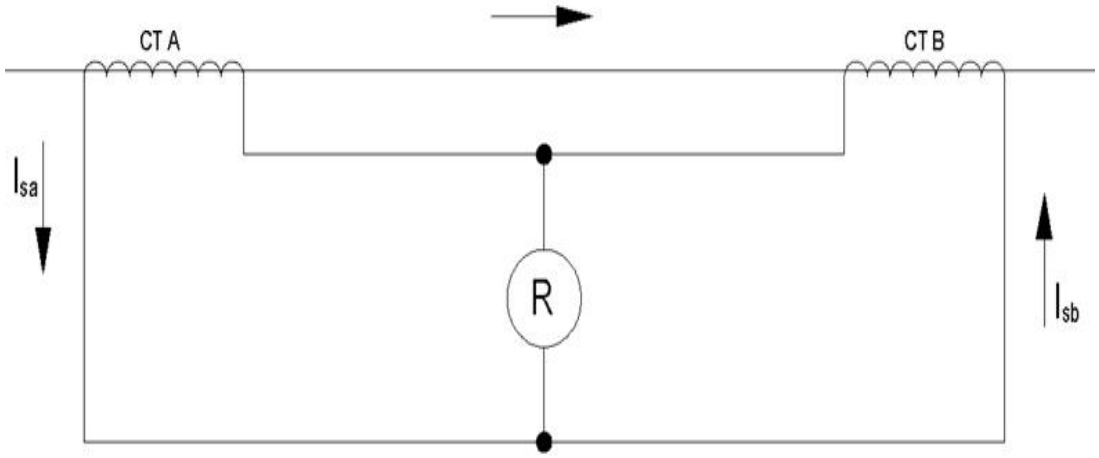


Basic Circuit For Balance Forms Of Protection

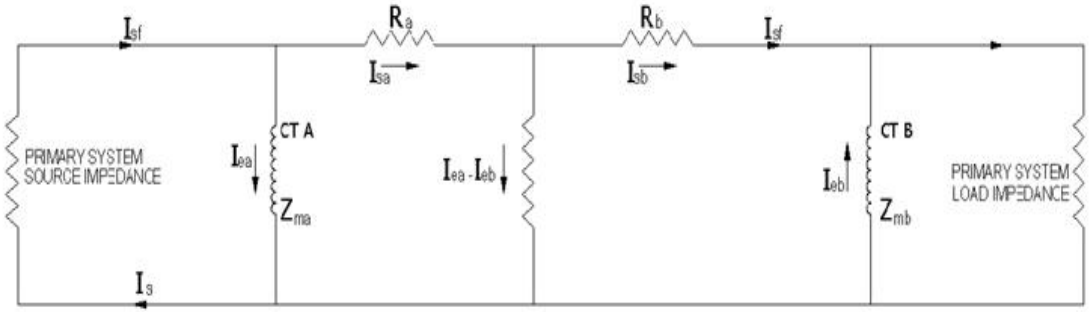


EQUIVALENT CIRCUIT

© ABB Group

# Accuracy Class
# Protection Current Transformer- Class PX

- Balance system of Protection

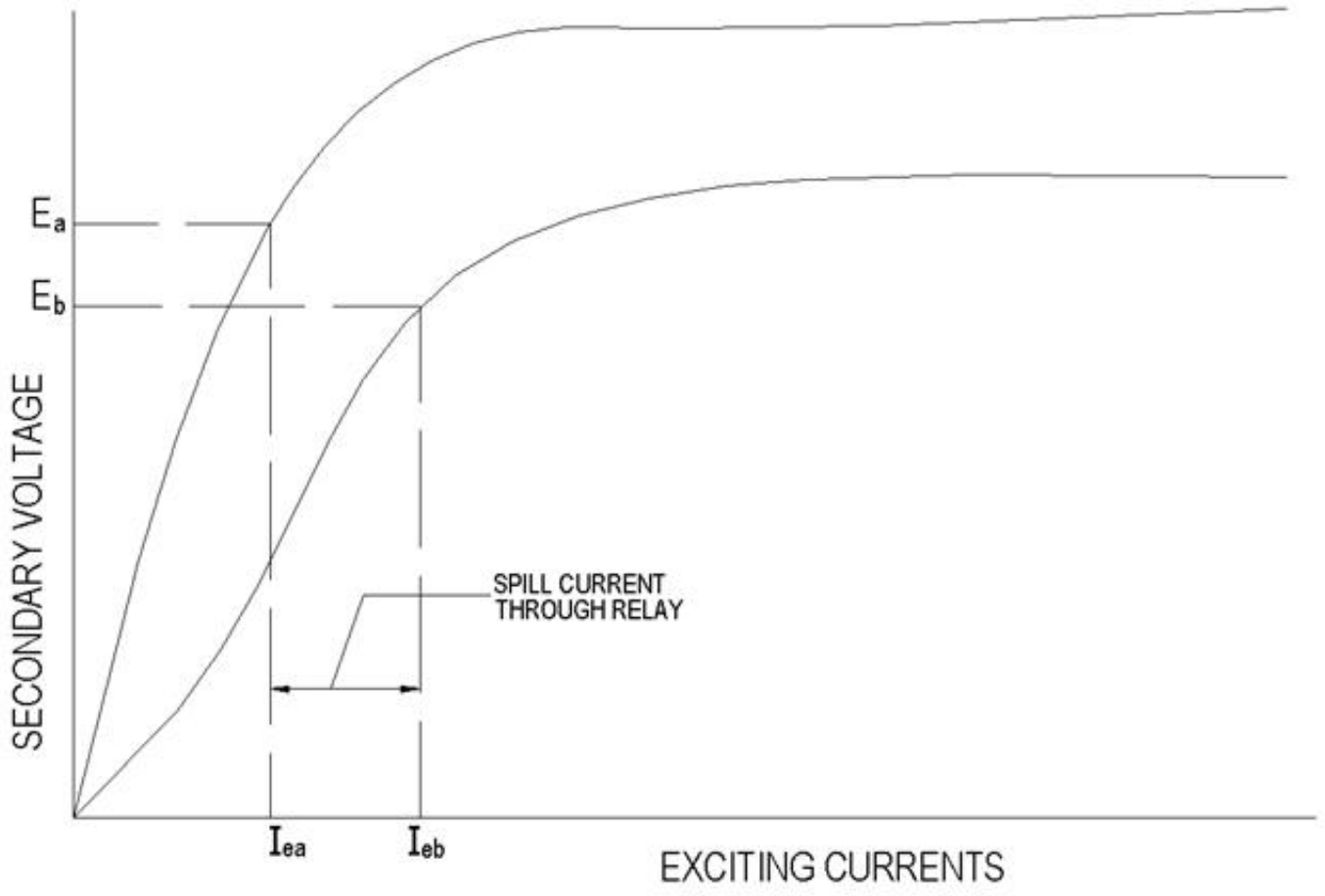


© ABB Group

# Accuracy Class
# Protection Current Transformer- Class PX

- Restricted earth fault portection for solidly earthed Transformer using class PX CT.

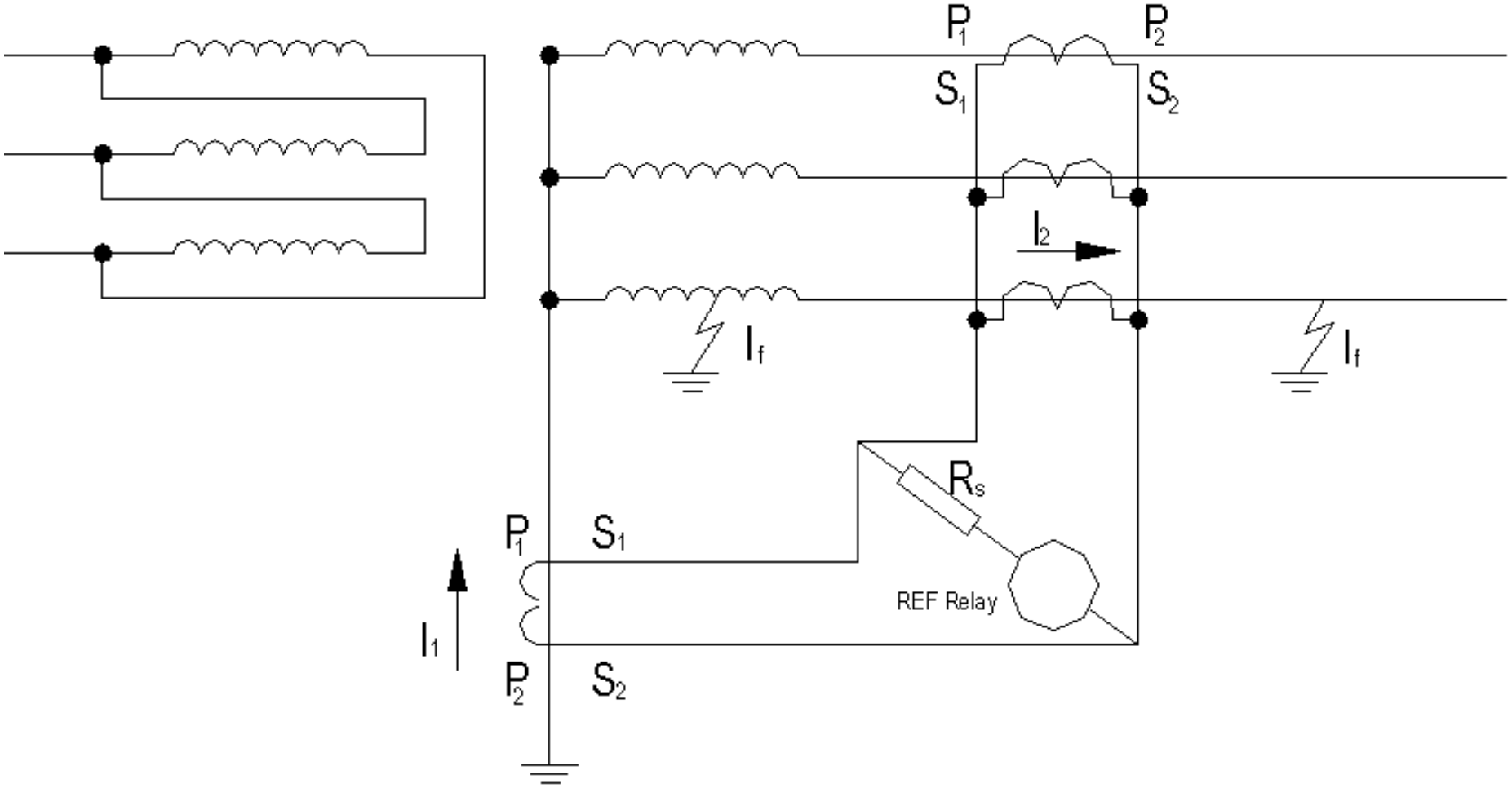


© ABB Group



Iyer, Design Manager, Low Voltage Systems, Automation Products division, 19-02-2009

# Low voltage switchboard design

## Points to remember for current Transformers

© ABB Group


Power and productivity
for a better world™

# Points to remember

- Current and Voltage sensors supply metering and control command devices. Their galvanic insulation , ensures safety of operational personnel.
- The current transformer is a transformer that is connected to a low impedance(operation in virtual short circuit mode).
- The current transformer gives its secondary a current that is proportional to the primary current.
- In a current transformer (CT) the ratio of current between primary and secondary is constant. The secondary current is thus independent of load. If Z is the load impedance of the CT, then at the secondary we have:

  $P = Z \times Is^2$ and $Us = Z \times Is$

  P = power flow to the secondary

  Is = secondary current

  Us = secondary voltage

  If Z decreases , then P decreases

© ABB Group

# Points to remember

- We can thus short circuit without damaging the secondary of the CT, however if the secondary circuit remains open, Z tends to infinity, the power and the voltage will in theory, be infinite, but are fortunately limited by the magnetic and copper losses of the CT and the source.
- Nevertheless the voltage can attain a peak of several KV. It's thus dangerous to leave a CT in an open circuit since under these conditions, voltages, dangerous to personnel and to equipment may appear across its terminals.

© ABB Group



Iyer, Design Manager, Low Voltage Systems, Automation Products division, 19-02-2009

# Low voltage switchboard design

## Questions and Answers

© ABB Group


Power and productivity
for a better world™

# Question and Answer session

© ABB Group

Power and productivity
for a better world™

