Carrier

United Technologies

turn to the experts

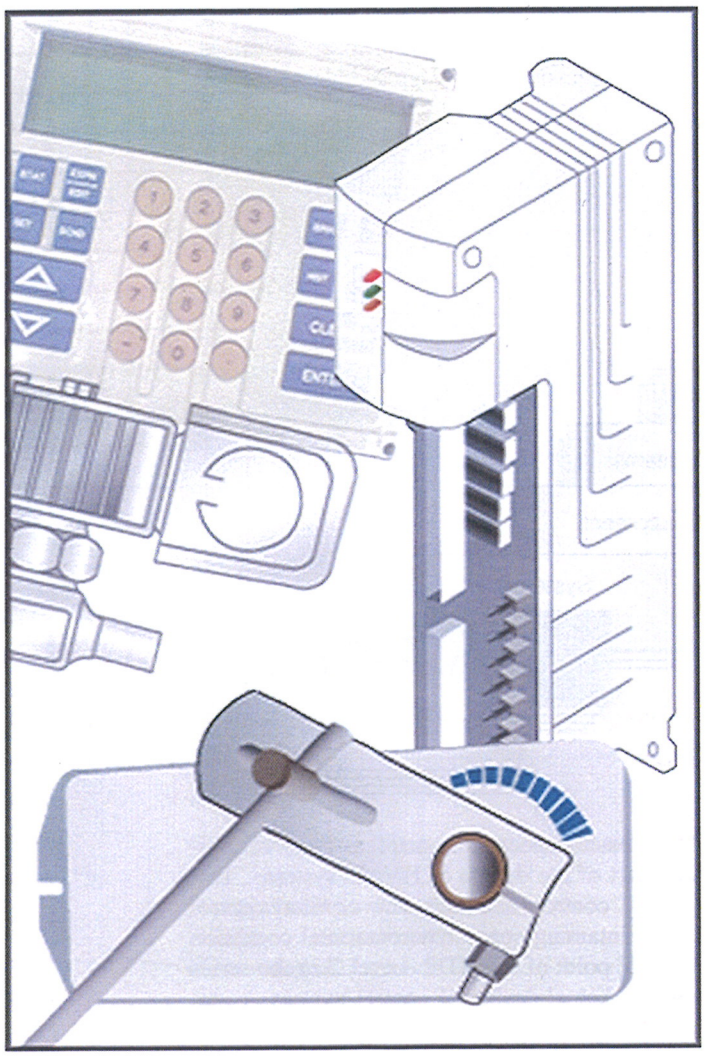

CONTROLS

Controls

Level 1: Fundamentals

Technical Development Program

Technical Development Programs (TDP) are modules of technical training on HVAC theory, system design, equipment selection and application topics. They are targeted at engineers and designers who wish to develop their knowledge in this field to effectively design, specify, sell or apply HVAC equipment in commercial applications.

Although TDP topics have been developed as stand-alone modules, there are logical groupings of topics. The modules within each group begin at an introductory level and progress to advanced levels. The breadth of this offering allows for customization into a complete HVAC curriculum – from a complete HVAC design course at an introductory-level or to an advanced-level design course. Advanced-level modules assume prerequisite knowledge and do not review basic concepts.

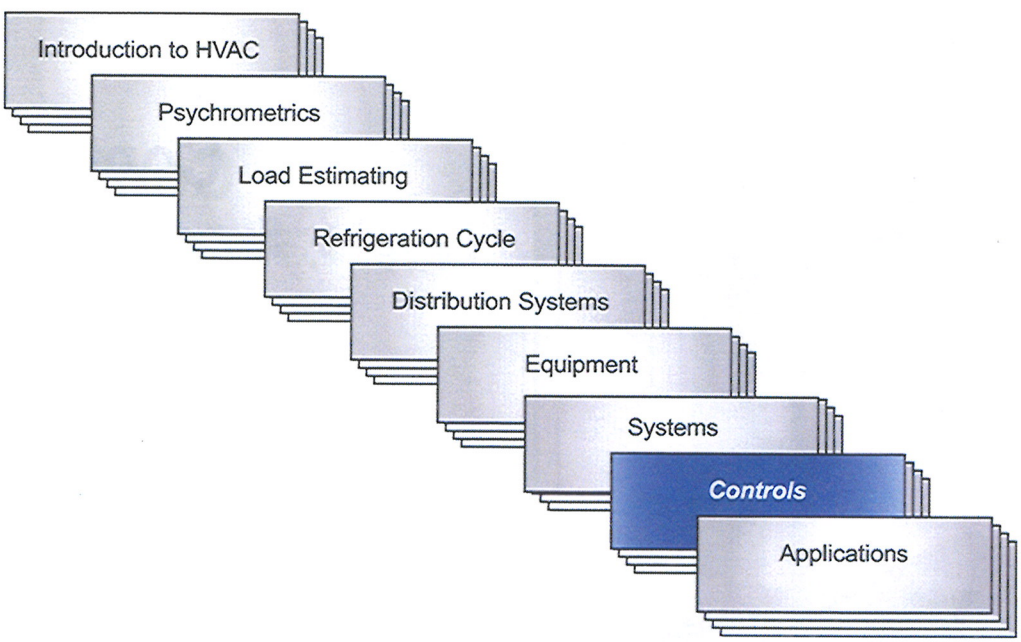

The fundamentals of HVAC controls introduces the basic concepts of control and the vocabulary necessary to understand HVAC controls that are part of the design of HVAC systems. This TDP will take the elements and building blocks of HVAC controls and show how comfort control systems create the desired equipment responses for maintaining space environmental condition set points. Direct digital controls (DDC) will be the focal point of this TDP. Level 2 in the series will continue the discussion covering DDC networking. Actual design of control systems is not covered in this program; consult the references listed in the back of this module.

© 2005 Carrier Corporation. All rights reserved.

The information in this manual is offered as a general guide for the use of industry and consulting engineers in designing systems. Judgment is required for application of this information to specific installations and design applications. Carrier is not responsible for any uses made of this information and assumes no responsibility for the performance or desirability of any resulting system design.

The information in this publication is subject to change without notice. No part of this publication may be reproduced or transmitted in any form or by any means, electronic or mechanical, for any purpose, without the express written permission of Carrier Corporation.

Printed in Syracuse, NY

CARRIER CORPORATION
Carrier Parkway
Syracuse, NY 13221, U.S.A.

Table of Contents

Introduction 1
What are Controls, What is Control? 1
Control Levels 2
Purposes of HVAC Control 2
Elementary Control 3
Control Actions 4
Control Terms 4
Two-Position (On-Off) 5
Timed Two-Position 5
Floating-Point 6
Proportional (P) 7
P Algorithm 7
Proportional + Integral (PI) 8
PI Algorithm 9
Proportional + Integral + Derivative (PID) 9
PID Algorithm 10
Control Action Analysis 10
Overshoot/Undershoot/Settling Time 11
Gain 11
Offset 12
Integral Term 12
Derivative Term 12
Common HVAC Control Strategies 13
Control Devices versus Controlled Devices 13
Types of Control Devices 14
Relays and Contactors 14
Actuators 14
Switches 14
Sensors 14
Types of Controlled Devices 14
Types of Control Systems 15
Pneumatic Control 15
Pneumatic Control System Requirements 17
Pneumatic Control Characteristics 17
Electric Control 17
Electric Control Diagrams 18
Electric Control System Requirements 18
Electric Control Characteristics 19
Electronic or Direct Digital Control (DDC) 19
History of DDC 20
DDC System Requirements 21
DDC Control Characteristics 21
DDC Architecture 22
Defining a General-Purpose Controller 23
DDC Network 24
User Interfaces 24
Direct Digital Control Theory 25
Control Loops 25
Open-Loop 25
Closed-Loop 25

Control Point Classification 26
Typical Input and Output Channel Signals 27
Analog Input (AI) 27
Discrete Input (DI) 27
Analog Output (AO) 27
Discrete Output (DO) 28
Points List 28
DDC Design for HVAC Equipment 29
Rooftop Unit Example 29
Step 1 – *Desired Control Strategies* 29
Step 2 – *Desired Controlled Devices* 30
Step 3 – *Control Action Selections* 30
Step 4 – *Sequences of Operation* 30
Steps 5 and 6 – *Sensor Selection/Input Control Devices* 31
Step 7 – *Required Controller Channel Capacity (or points required)* 31
Rooftop Unit System Diagram 32
Summary 32
Work Session 1 33
References: 37
Work Session Answers 38

Introduction

This Technical Development Program (TDP) describes the fundamentals of HVAC controls. This module will be used to introduce the concepts of control and the vocabulary necessary to understand HVAC controls that are part of the design of HVAC systems. This TDP will take the basic elements and building blocks of HVAC controls and show how comfort control systems create the desired equipment responses for maintaining space set points like temperature, relative humidity, and carbon dioxide (CO_2) level.

What are Controls, What is Control?

To understand what controls are, one has to understand the difference between the noun controls and the verb control. The noun controls refers to the instruments, devices, and software that sense conditions and cause actions to happen. These can be thought of as the eyes and ears, and mouth and arms of the control system. These are the hardware items like sensors, timers, contactors, valves, solenoids, switches, actuators, and relays. These are connected into a controller, the brain of the control system, where the logic exists to execute the control sequences of operation. The verb control refers to the action plan of using controls to provide desired results through a control sequence of operation.

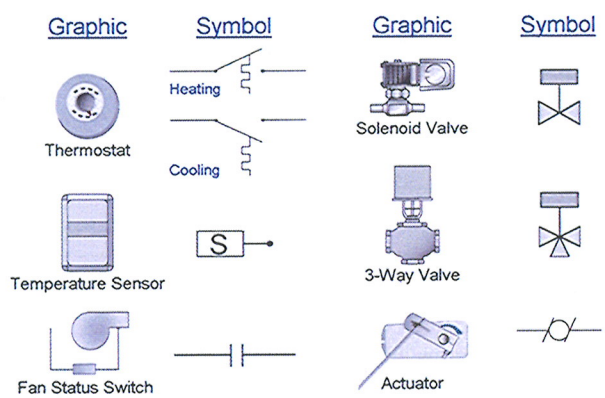

Figure 1

Controls (Hardware Elements)

A control sequence of operation is the order in which control devices and equipment are enabled, disabled, reset, and otherwise instructed to insure the proper air conditioning of building spaces, along with the safe and reliable operation of the HVAC equipment. This is done with the use of sensors, switches, contacts, relays, and timers that turn things on and off, or in the case of valves and dampers, open and close them.

Control

is the coordination of hardware and logic to properly sequence equipment and devices to produce the desired results of human comfort, and the safe and reliable operation of HVAC equipment.

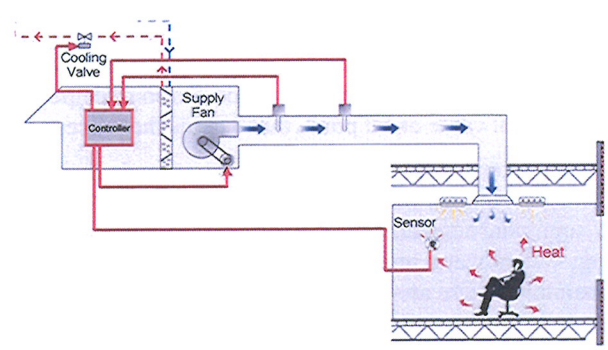

Figure 2

Control Equals An Action Plan

Control Levels

Many buildings are divided into zones that have unique control requirements. HVAC systems can have control devices at the zone level, the equipment level, and at the building level.

Control at the zone level can consist of a duct airflow damper and room temperature sensor or a bimetallic thermostat controlling a VAV terminal. Another zone control scheme would use CV terminals with hot water reheat valve control.

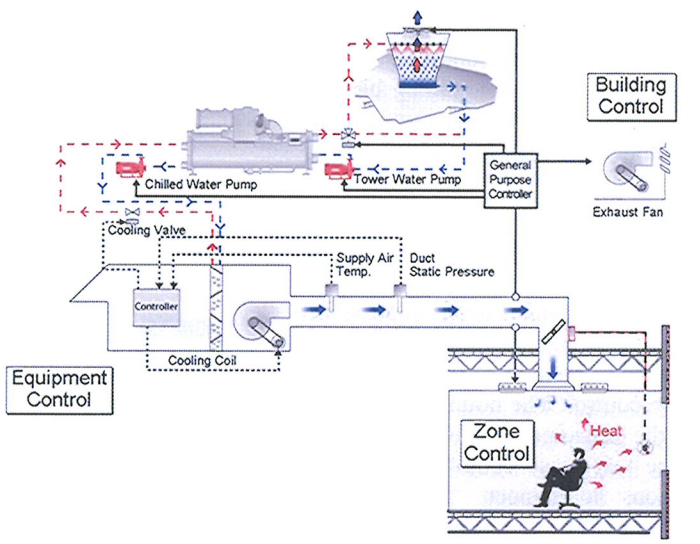

Figure 3

Control Levels

Control at the equipment level would expand the zone control to include an air handling unit with its fan, a cooling valve or DX staging, and a mixing box with return, relief, and outdoor air dampers.

The most encompassing level of control involves an entire building. Building control goes beyond the system control found in zone and equipment to include tower pumps, bypass valves, chillers, chilled water pumps, boilers, dedicated ventilation system air handling units, and direct exhaust fans. The complexity caused by the interaction of the control devices increases significantly as you attempt to control more pieces of equipment and include control requirements beyond basic HVAC comfort.

Purposes of HVAC Control

At the zone level the HVAC industry measures physical phenomena and talks about control in terms of the temperature (°F), humidity (% rh), flow (cfm or gpm), pressure (duct static) and quality (CO_2) of air conditioned by an HVAC system. Since temperature is easiest to measure, and building occupants are able to sense dry bulb temperature, it is the primary choice as a controlling value. Maintaining the space or room temperature at a comfortable level, which becomes the control value or set point, then begins the process of controlling the room comfort level.

Comfort is not the only thing that controls maintain. At the equipment level, the focus of the control is to provide a desired equipment output. Depending on the type of equipment this may be a supply air temperature, a leaving water temperature, a leaving tower water temperature or piping system water pressure. Controlling these values are not the only thing that equipment controls maintain. There are control devices, sensors and switches on HVAC equipment that have a safety or reliability function. These devices protect the equipment or system, lowering the risk of harm to the occupants or building, and preventing premature failure or damage to other building systems and equipment.

At the building level, the focus is on coordinating the activities of different building systems, like lighting and security, and central pieces of HVAC equipment (e.g. boilers and cooling towers), as well as maintaining the overall IAQ level in a building. In addition, there are issues beyond HVAC and basic fire, and life safety, such as emergency response to a chemical, biological or radioactive threat. These all have to do with the complete building level approach to control.

Elementary Control

There are two types of control, open-loop and closed-loop. Open-loop control consists of a switch connected to a piece of equipment. If the switch is working properly, you can turn the switch on and the equipment or device is energized. If the switch is turned off, the equipment or device is de-energized. However, to control the temperature in a room you would have to get up and turn the switch on if the room was too warm, then get up again if the room was too cold. If the switch were located in an area that the temperature could not be sensed physically, then there would be no way to know if the actions of using the switch produced the desired results. All that is known is the switch closed so the equipment or device was told to go on. This kind of control often uses a time clock to turn things like lights or lawn sprinklers on and off. Typically, this type of control is never used by itself for the control of comfort or equipment.

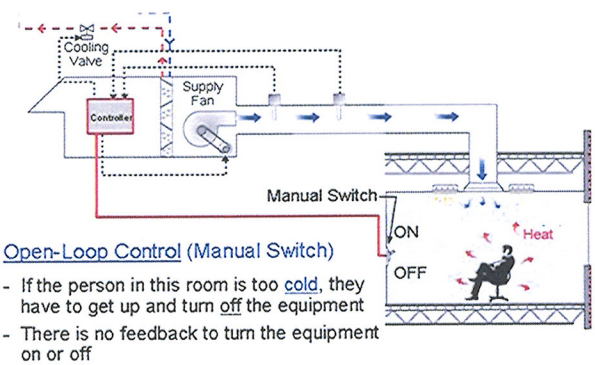

Figure 4

Open-Loop Control Provides No Feedback.

Open-loop control

provides no feedback to indicate the results or change of the actions. Closed-loop control is ideal because it uses some form of feedback.

Closed-loop control would replace the manual switch with a bimetallic switch, or thermostat, that would turn on equipment or turn off equipment as the temperature changed. If this bimetallic switch energized a rooftop unit with a cooling coil, then you would see the unit turning on and off as the air temperature warmed and cooled. The affect of the unit running with the cooling coil changes the air temperature that causes the bimetallic switch to move, to either turn on or turn off the air handler unit. This in effect feeds back the result of the action of the rooftop unit and cooling coil.

Control Actions

One of the things that must be looked at is the kind of control action required to produce the desired result in a controlled device, equipment or system. There are several different types of control actions:

- Two-position
- Timed two-position
- Floating-point
- Proportional (P)
- Proportional + Integral (PI)
- Proportional + Integral + Derivative (PID)

Control of devices, equipment, and systems will use any one or combination of these actions to produce the desired result. A brief description of each follows, after which we will analyze in more detail the three control actions used in DDC (direct digital control).

Control Terms

Before discussing the various control actions, here is a short list of terms and abbreviations used in this section. The meanings and uses of the terms will become clear as we progress through the next couple sections.

Controlled Variable is the changing measured value that needs to be held constant.

Set point is the fixed value to which a controlled variable needs to be maintained. This is often referred to as the control value.

Measured Value is the actual sensed condition of a controlled variable. This could be temperature, humidity, cfm, gpm, or static pressure to mention a few.

Analog is a continuously changing condition with an infinite number of measured values.

Discrete is a condition that has two and only two measured conditions.

Error is the difference between the measured value and the set point that initiates corrective action to maintain set point.

Gain is a constant value that is used to amplify or reduce the effect of the error on the output of a control loop.

Dead Band is the control area of a controlled variable in which the measured value will not initiate any form of corrective action.

Limits (high and low) are conditions that define the range of the dead band of normal operation. This is often referenced as a +/- value from set point.

Control Differential is the span between the high and low limits.

Operating Differential is the span of the measured value of the controlled variable from its highest measured value to its lowest measured value when under control.

Offset is the steady state difference between the set point and measured value. Offset is often incorrectly referred to as error. This term is only significant in a proportional control action. In other control actions the value of offset tries to go to zero.

Overshoot is the maximum measured value above the set point.

gateway
router

Undershoot is the minimum measured value below the set point.

Control devices are the sensors and actuators (specific hardware devices) that perform an action that is used to control equipment.

Controlled devices are the valves, fans and dampers that implement the actions requested by the logic within the controller.

Two-Position (On-Off)

Two-position control action produces a change that has only two values (i.e. on-off, opened-closed, enabled-disabled). For example, a constant volume fan status (e.g. an indicator light or control system input) is either on or off while the fan relay is energized or de-energized. A solenoid valve is commonly either open or closed. In the digital controller world, this is either a "1" or a "0" state. Where "1" is a positive state or true or on and "0" is a negative state or false or off.

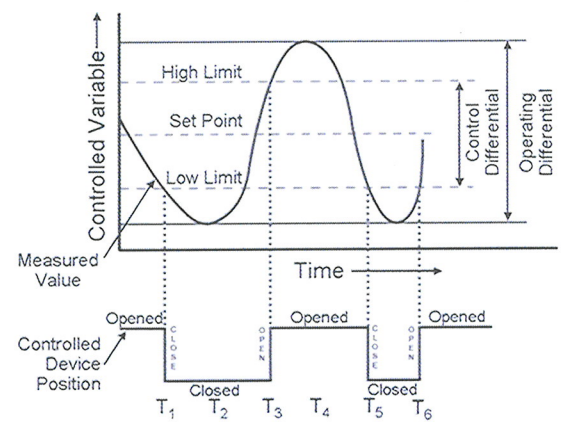

Figure 5

Two-Position (On-Off) Control Action

A simple example of a two-position control is that of a window air conditioner where the compressor is cycled on and off using a bimetallic thermostat in an effort to provide comfort. Other examples might be a parking lot lighting control using a photocell, or a pressure switch to turn an air compressor on and off as the pressure in the system goes up and down.

Timed Two-Position

Timed two-position control action is known as pulsed width modulation (PWM). This control action is one that uses a two-position device with a timing circuit to control how long the device is held open and how long it is held closed. The time the device is enabled or disabled is determined by how far the measured value is from the control point (set point). This produces a form of modulating control action. This form of control was used early in the development of Direct Digital Control (DDC) systems. As true analog modulating control devices have become available, the use of this control has all but disappeared.

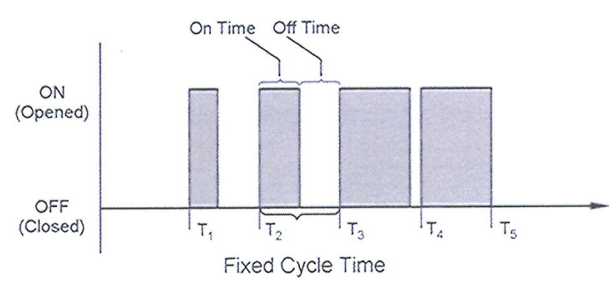

Figure 6

Timed Two-Position Control Action

A typical example of a timed two-position control action would be the power control in a microwave oven. The oven power output is fixed, so to get different power levels, the microwave is cycled on for a short time period and then off for a short period. The result is an average power output close to the desired required power level. An HVAC application using this same technique would be an air terminal electric heater.

Floating-Point

Floating-point control action is a form of modulating control. It requires a control device that uses a signal to drive to one position and a different signal to drive back to a starting position. In floating-point control, when the measured value exceeds either control value limit, a signal is sent to the control device to move in one direction or the other. If the measured value is within the control differential, no signal is sent and the device would stay in its last position. This is different than true modulating control because the measured value is allowed to wander between the high and low limits.

Floating-point

control action is often used when the cost of true modulating control does not merit the benefits of modulating control action (proportional control).

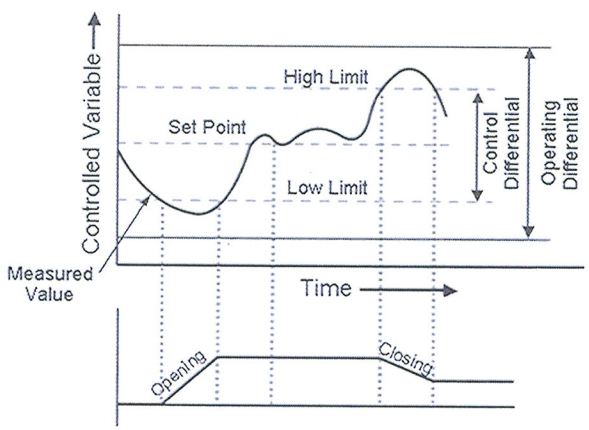

Figure 7

Floating-Point Control Action

Floating-point control does perform a reasonable job at providing modulation control for some systems where the reaction of the system to changes is not significant. Floating-point actuators are less expensive then true modulating actuators. An example of a floating-point actuator would be a hot water valve on a 1/2-in hot water supply line to a fan coil unit, where the set point is 72° F with a high limit of 73° F and a low limit of 71° F. The control differential is +/- 1 ° F. The heating valve will open when the measured value is below 71° F and will stop opening if the measured value is greater then 71° F but below the high limit of 73° F. The heating valve will stay in that position until the measured value gets to be greater then 73° F at which point the heating valve will start to close. When the measured value drop below 73° F the heating valve will stop closing and stay in that position until the measured value drops below 71° F.

Proportional (P)

Proportional control action is the basis for all proportional control systems. This type of control action changes the amount of action taken based on how far the measured value is from the desired control value or set point. The farther the measured value is from the set point the more action will be taken to try to get back to the desired control value. The difference between the actual measured value and this set point is called error. The proportional output value, or Pterm, is derived by multiplying this error by a constant called a proportional gain, or K_P, which is a fixed value giving an output value that is proportional to the error. There is a term called the start value that is added to this output value for instances where the initial output should not be zero, such as the minimum setting for an outdoor air damper being 10 percent open.

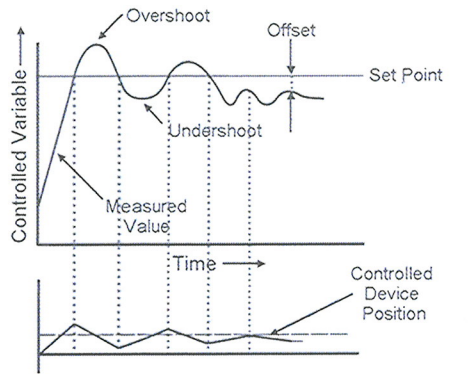

Figure 8

Proportional (P) Control Action

Now is a good time to introduce a term called a control algorithm. As a mathematical procedure, algorithms form the basis of all control activities. An HVAC algorithm is a programmed mathematical control routine that looks at sensor inputs and set point values, corrects with proportional, integral and derivative gains, and is configured for a specific application to control an output device. Many equipment-specific HVAC algorithms are normally pre-engineered and programmed directly into DDC controllers.

Algorithms

are mathematical procedures that solve recurrent computations. They are used for all control actions and control types.

Proportional control action is the most basic example of a single-value control algorithm. In this case, it changes the output action as the measured value moves away from the set point value.

P Algorithm

Output Value = Pterm + start value

*Pterm = (set point – measured value) * K_P = (error) * K_P*

or

*Output Value = (error * K_P) + start value*

Here is an example of a simple cooling valve control using a proportion control. For this example, the set point is 70° F and the sensor measures 72° F. To calculate the error, take the set point minus measured value, which is 2° F, or 2. For this example, the start value is zero (0).

This example will use a proportional gain K_P of -20. From above the error is -2° F. When K_P multiplies this, the proportional output will be 40 (the output value represents the controlled device, say a valve, percent open) or 40 percent open.

*Output = ((70 – 72) * (-20)) + 0 = 40*

Now if the error is -4° F, the proportional output likewise doubles to 80 percent open. The change in output is proportional to the change in error.

Proportional control action does provide reasonable control for many systems. It requires that there be a change in the difference between the measured value and the set point (error) to have the output value change. This will stay constant until there is change in the error. Therefore, for a given error the output is constant. If there is no change in this error, the output will stay constant. As a result, the measured value may never get to the set point value. The difference between the measured value after a long period of time and the set point is known as the offset.

Proportional control action also allows actions to be taken that cause over and under achieving the desired result. If the measured value changes and the response is too great, the device will overcompensate repeatedly, moving from a full-open position to a full-closed position, never reaching the set point. This control condition is referred to as hunting. It is a waste of energy and it reduces the life of the controlled device.

A typical example of proportional control that you might encounter in normal HVAC applications is space temperature control, where a sensor or thermostat located in the room provides set point feedback that establishes the error signal driving the algorithm that varies the capacity of the cooling or heating supplied to the room.

Proportional + Integral (PI)

Proportional + integral control action uses the proportional control action, but with an additional value in the resulting output. This additional value is called the integral output or Iterm. While the proportional value does not change with time, the integral value is time-dependent. The integral term looks at the error just like the proportional term and multiples the error with an integral gain, or K_I, which is also a fixed value. The K_I value is usually significantly smaller than the K_P value. The result of this calculation is an integral value. This integral value is added to the proportional value to give you an output value. However, this value will be recalculated over time and the last integral value added to the new calculated value plus the proportion term. The result is that the output value will change with time. PI control action also adds a starting value to the output value for instances where the initial output is not zero.

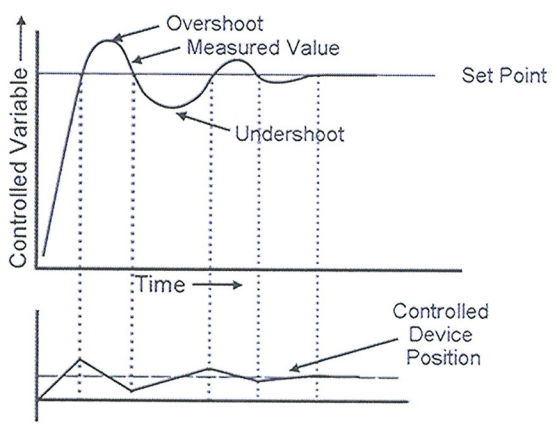

Figure 9

Proportional + Integral (PI) Control Action

Proportional + integral control action is an example of a two-value control algorithm. In this case, there is an additional value called the integral term that wants to make the error zero over time by increasing or reducing this value. Even if the error value is constant, this term will continue to change to reduce this error to zero.

PI Algorithm

Output Value = Pterm + Iterm + start value

*Pterm = (error) * K_P*

*Iterm = (error * K_I) + Ivalue (last calculated Iterm)*

Start value = a specific control value required for the application (This is a fixed value or constant.)

From the example above, the first error was -2° F and the start value was zero (0). If the K_I value were -1, the integral term would be the error multiplied by the K_I, plus the previous integral value, or *Iterm = (-2 * -1) + 0 = 2*

The PI output would be the proportional term from above, 40, plus the integral term of 2 for an output value of 42. Now, the next time we calculate the output with the PI control the proportional term will not change the second calculation of the (I) valve will again be 2. The integral term will be 2 plus the last value of 2, for a total value of 4. The new PI output is now 44. Each time the (I) value is recalculated the integral term will increase or decrease depending on the error. This has the effect of dampening the proportional output and avoiding overshooting.

PI control action

is more than adequate for most HVAC control applications like valves, dampers, and actuators.

The timing of the recalculating algorithm is important to the PI control action. The timing set for recalculation will address how quickly and how often the output value will change. Recalculating every minute will give you a different output than recalculating every 2 minutes.

PI control action, with the addition of an integral term to the proportional term, allows the output to change when the error is constant. The integral term eliminates offset quickly and helps to reduce the amount of hunting seen in the proportional only control action. These two features make PI control well suited for most HVAC control applications.

A typical example of proportional + integral control that you might encounter in normal HVAC applications is fan static pressure control in the supply ductwork, where a sensor located in the downstream ductwork provides set point feedback that establishes the error signal driving the algorithm that varies the speed of the fan.

Proportional + Integral + Derivative (PID)

Proportional + integral + derivative control action builds on PI control action by adding a third value to the resulting output. This last term is called the derivative term, or Dterm. The derivative term looks at the rate of change in error and multiples this by a derivative gain, or K_D. This is usually a value smaller then the K_P or K_I values. Once again, a starting value is added to the output value where the initial output is not zero.

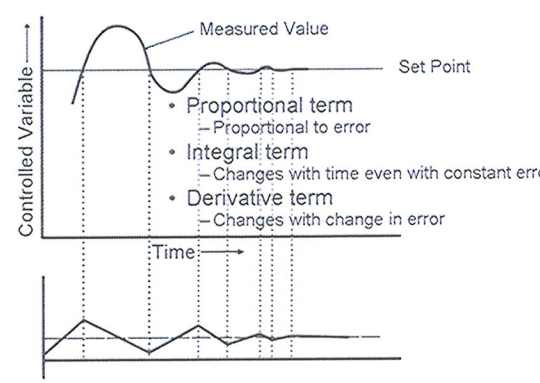

Figure 10

Proportional + Integral + Derivative (PID) Control A

PID Algorithm

$$Output\ Value = Pterm + Iterm + Dterm + start\ value$$

$$Pterm = (error) * K_P$$

$$Iterm = (error) * K_I + Iterm\,(last\ calculated)$$

$$Dterm = (current\ error - previous\ error) * K_D$$

$$Start\ Value = specific\ control\ value$$

The PID control action, with the addition of a derivative term, is now a three-value control algorithm. The total output value is now a combination of the proportional value, which was proportional to the error. The integral value increases with time if the error did not decrease and the derivative value that changes with the change in the error. If the error does not change, the derivative term goes to zero (0). If the error is decreasing in value, the derivative term becomes negative and acts like a "brake" to reduce the effective output.

If the change in error is increasing, the derivative term acts like a booster to help increase the effective output. The derivative term helps to eliminate offset and hunting. The need for critical control in HVAC systems is usually limited to steam heating systems where the energy content in the system requires PID control action for the steam valves.

PID control action

is best suited for critical applications needing to reduce over and under-shooting the set point while maintaining quick response to error.

In most HVAC applications, the large thermal inertia of the conditioned spaces within the building lengthens the time cycle for responding to temperature changes, making PI control action adequate in most applications. This will become more apparent in the next section as we analyze the three DDC control actions in greater depth.

Control Action Analysis

Each of the control actions has unique characteristics that dictate how they are used in control strategies. The proportional, integral, and derivative terms can be adjusted, as needed, to get the desired loop control response. When one of the terms is not desired, it is simply zeroed out. The adjustment is made either by user configuration or automatically, using a special loop tuning software program, in which case it is called a self-tuning loop.

Overshoot/Undershoot/Settling Time

The proportional control action has no way to anticipate the rate at which the controlled variable approaches the set point.

If the output increase is large in comparison to the load increase, the rate at which the output change approaches the set point will be rapid. By the time the control responds, the output correction will overshoot. Next, the control will react, over-responding in the opposite direction, causing the control loop to undershoot, and so forth. Once the system equilibrium is disturbed by a load or capacity change, the time it takes for this oscillation to calm down to a reasonable variation around set point is called the settling time.

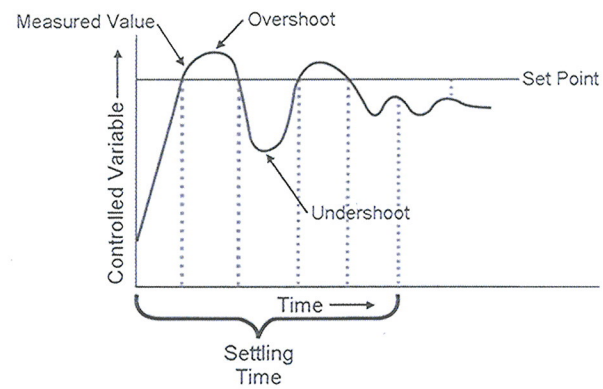

Figure 11

Lengthy Settling Time With Proportional Control

Gain

Not all devices being controlled need to respond the same to changes. The specific application and the type of device being controlled will determine the response needed to a given error (set point value – measured value). The output response will depend on the multiplier applied to the error. This multiplier in a proportional control loop is called the gain or the proportional gain (Kp). The greater the gain, the greater the response to a change in the error (the difference between the sensor value and the set point value).

For example, with a K_P or gain of 1 would mean that if the temperature measured is 72° F and the set point 70° F, the error is 2. Multiple the error by the gain of 1, the output response would be 2. Now if the K_P is 4, the output response will be 8, and if the K_P is 10, the output response will be 20. The result is that the larger the K_P or gain, the more sensitive the output response will be to a small change of the sensed value.

The amount of sensitivity will also affect the amount of overshoot and undershoot of the proportional control strategy. The greater the gain the greater the overshoot and undershoot. Gain can be changed through user-selectable configuration of a DDC proportional control loop. This is often referred to as the proportional gain.

Offset

There is an inherent characteristic of proportional control called offset. Offset is the difference between the stabilized, or settled, controlled variable condition and the set point. Offset occurs because of proportional gain. It will happen whenever the error is less than the gain setting. In proportional control action, if the error does not change, the output stays constant, and you are left with an offset.

Like proportional control action, the added affect in PI control is a change based on the difference of the control value to the measured variable multiplied by another gain, the integral gain.

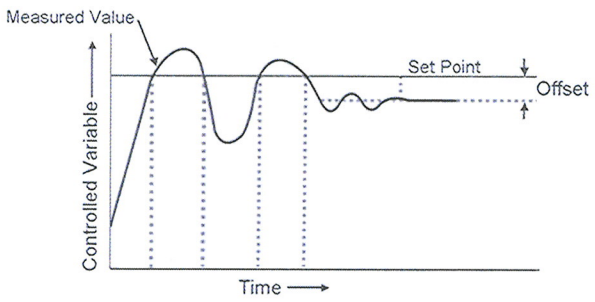

Figure 12

Offset Remains In Proportional Control

Integral Term

PI control will continue to re-calculate the output value over time. In doing so it will be increasing or decreasing the output value by the integral term. For a fixed difference in the error value, there will be changing output over time as the control tries to move closer to the control value. The integral term changes the output to help produce a desired result, like moving the measured value closer to set point in a shorter time.

The integral term eliminates the offset over a very short time. The integral term also helps to reduce the amount of hunting seen in the proportional control action. Such features make PI control action appropriate for most HVAC control strategies.

Derivative Term

The addition of the derivative term to the proportional and integral terms adds the change in the error to the control output. The derivative term keeps the over and undershooting of the control value to a minimum by adding an opposite value to the output, acting like a braking system. The derivative value is not used in most HVAC algorithm applications because in HVAC applications measured values change in minutes. The slow change of values, along with the large thermal inertia of a typical HVAC system, makes the effect of a derivative term in the algorithm unnecessary. When quick and precise responses are required to prevent a safety concern or a reliability concern, a derivative term is used in the control strategy. Typically, this occurs when control of steam is involved. When using steam, extreme pressure and water hammer can cause safety and reliability concerns.

Common HVAC Control Strategies

Different devices or equipment components in HVAC systems require different control strategies to perform effectively. Figure 13 shows a list of common HVAC control strategies that are found in DDC systems. Remember, HVAC system characteristics do not change the same as in industrial process control. Factors such as space temperature do not change in fractions of a second, or seconds, but in minutes. For example, the outside air temperature will not significantly change in tens of minutes. Therefore, the kind of control strategy for a device will reflect this. If you look at this chart, you will see that only the control of a steam control valve has a full PID control Strategy.

Application Strategy	Action or Algorithm
Mixed Air Dampers	PI
Chilled Water Coil Valve with Discharge Sensor	PI
Hot Water Coil Valve with Discharge Sensor	PI
Static Pressure Control of Supply Fan	PI
Flow Tracking Control of Return Air	PI
Hot Water Converter (Mixing/Diverting Valve)	PI
Temperature Control	P
Steam Heating Valve	PID
P = Proportional PI = Proportional + Integral PID = Proportional + Integral + Derivative	

Figure 13

Common HVAC Control Strategies

Control Devices versus Controlled Devices

Control devices, like sensors and actuators, have been described in relation to actions as input and output points. These input and output points are specific hardware devices that perform an action that is used to control equipment.

Controlled devices, like valves, fans and dampers, implement the actions requested by the logic within the controller.

Both are grouped into one of the following four point types: Analog Input (AI), Discrete Input (DI), Analog Output (AO), or Discrete Output (DO).

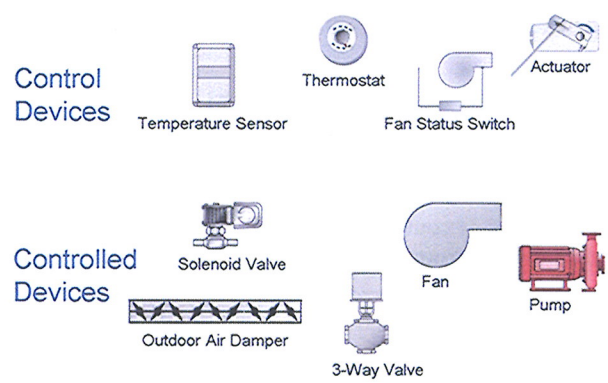

Figure 14

Control Devices and Controlled Devices Are Different.

Types of Control Devices

Relays and Contactors

DDC systems are not powerful enough to directly energize equipment, they use relays and contactors to activate other devices or start motors. Relays are used for lower power applications and contactors for higher power application like turning equipment, fans, and pumps on and off. These are typically DO (Discrete Output) devices

Actuators

The DDC system will provide a signal (4 to 20 milliamp or 0 to 10 vdc signals) to devices called actuators. These actuators will take signal from the DDC system and drive devices like valves and dampers opened or closed. These are typically AO (Analog Output) devices.

Switches

The DDC system requires information about the status of equipment during operation and relies on a wide family of switches to provide the information. Switches provide important information to control the sequence of operation. These include start/stop, end limit, minimum position, and level limit switches, along with safety limit switches. Some of these switches are internal to sensing devices used to determine things like fan status, filter status, and high and low safety limits. These are typically DI (Discrete Input) devices.

Sensors

The DDC system relies heavily on sensor input to function effectively. Sensors measure many conditions used in the proper operation of equipment and control of building systems, such as temperature (space, duct, outside air, mixed air and return air), pressure (in ductwork, piping and the building), liquid flow, airflow, humidity (space, return and outside), current (equipment and building), voltage, and carbon dioxide (indoors and outdoors) just to name a few. These are typically AI (Analog Input) devices.

Types of Controlled Devices

Whereas the control device responds to or inputs signals associated with the controller, the controlled device is the end piece of equipment or component that the control acts upon. Another way to think of controlled devices is that they are those items noted in the sequences of operation, including such common HVAC items as the following:

1) Valve (water, steam, refrigerant, and compressed air)
2) Heater elements
3) Equipment (boiler, chiller, and tower)
4) Drive motor/VFD (fans and pumps)
5) Damper (outdoor, return, and zone)
6) Pilot positioner (for inlet guide vanes, valves, dampers, etc)

Application of control and controlled devices is presented in many of the product TDPs, but detailed treatment of the subject is reserved for other texts, many of which are noted in the references at the back of this TDP.

Types of Control Systems

There are several typical types of control systems in use today on HVAC systems:

- Pneumatic control
- Electric control
- Electronic or Direct Digital Control (DDC)

These control systems dictate the type and degree of control for the devices, equipment, or systems that are being controlled. Pneumatic control is often used where power and speed of actions are of concern, like large dampers that must close quickly. In addition, pneumatic controls are better suited to harsh environments. Electric control is used with equipment with specific application requirements and where modification to the operation of the equipment needs to be restricted to qualified service personnel. Troubleshooting of electric controls is quite simple, not requiring anything more then a standard multi-meter and an elementary understanding of electricity. Electronic or DDC systems are used were more complex control logic is required involving multiple layered sequences of control, along with applications requiring a high degree flexibility in modifying sequences. DDC systems allow for sharing of information between controllers as well as the ability to display information on a computer screen.

Pneumatic Control

Pneumatic control systems have been around the longest and have provided the foundation for control concepts used by other control systems. A pneumatic control system is an inherently analog logic control system. A pneumatic control system operates on air pressure between 0 and 20 psig. This allows for variable control output (modulated output), unlike electric control that would perform on and off control.

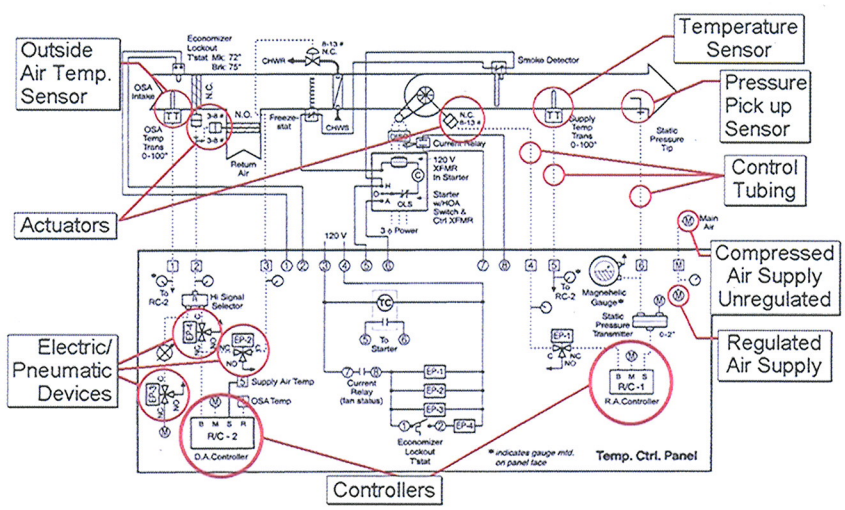

Figure 15

VAV Air Handler, with Pneumatic Controls

An example of pneumatic control is the simple thermostat and water or steam valve that has been around since before 1900. This device works by using compressed main air that is constantly supplied from a compressor through tubing to the thermostat. The throttling range indicated in Figure 17 is actually a combination of the operating range (end points of the line) and the proportional gain (slope of the line). Inside the thermostat is a bimetallic element that flexes in reaction to temperature changes. This movement determines the amount of branch air necessary to adjust the position of the valve.

Pneumatic controls

are best suited for device control and not complete system control.

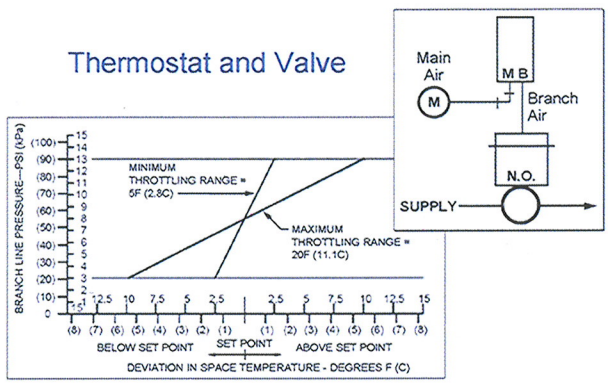

Figure 16

Pneumatic Control Action

Pneumatic control systems have the advantage of being able to cost-effectively modulate devices like hot water valves, cooling valves, inlet guide vanes, and dampers, such as outdoor air and exhaust dampers. A pneumatic control system cannot easily share measured values with other devices being controlled.

A pneumatic control system uses the characteristics of bellows, spring rates, balance beams, and bimetallic elements or pressure differences to produce the required control. To change the operating conditions (set points) of an HVAC system using pneumatic controls requires mechanical adjustments to be made to the bellows, spring tensions, balance beams pivot points, and bimetallic elements of the hardware. If the change were in the control logic then it would require hardware changes along with the addition of more devices to the system.

Pneumatic Control System Requirements

The typical pneumatic system requires the following:

1) An air compressor for control signals, and power to drive actuators. Most pneumatic devices are bleed devices that allow air to escape, so the compressor replaces the lost air.
2) A way to dry the compressed air. Moisture is a big enemy of pneumatic systems because it will damage pneumatic devices and plug bleed ports.
3) There is a large network of tubing to distribute compressed air to all the devices within the building doing the controlling and being controlled. There are typically two sets of pneumatic tubing, the first is called the main lines (typically 1/2-in. copper) and the second set is the branch lines (typically fire retardant 1/8-in. tubing).
4) Sensors for temperature, pressure, position, and status.
5) Actuators to drive open and drive close dampers, heating and cooling valves, and inlet guide vanes.
6) Pneumatic logic devices such as receiver-controllers, comparators, accumulators, and converting devices like a P/E (converts a pneumatic signal to an electrical), and its counterpart the E/P.

The air compressors on these systems have to be available all day, all week, and all year to replenish the air lost by the bleed-type sensors and actuators. In addition, pneumatic systems are composed of mechanical linkages, springs, and balance beams that require frequent calibration and maintenance. Often the re-calibration of key elements varies, leaving control loops operating inconsistently.

Pneumatic Control Characteristics

Pneumatic systems can operate in extreme conditions, both indoors and outdoors. The actuators can be powerful, quick to open and close, cost effective, reliable, and will even operate for a while during power interruption. However, pneumatic sensors are not as sensitive as electronic sensors. The sharing of measured values is not easy, and there are limitations on how many sensors can be joined to a signal comparator that will average the values or pass through the high or low signal. In HVAC systems pneumatics are still applied as part of a hybrid system using a DDC controller, with pneumatic operators on valves and dampers.

Electric Control

Electric control is often called relay logic because so much of the control logic is implemented with relays, which are electrically activated switches that change the state of a component or reconfigure a circuit pathway. Relays are used to switch the power to the devices being controlled. Typically, a device is in either the on or off mode or position. Electric control will use other devices that contain switches to turn the relays on or off. The switching function is built into control devices like thermostats, pressure and flow sensors, level indicators, time clocks, and position-indicating devices. The control logic of electric control, like that of a pneumatic control, has to be built into the hardware that is being used.

Electric Control Diagrams

For electric control systems, the logic and layout of controls is done with a ladder diagram. It is called a ladder diagram because there are horizontal lines of control for each item being controlled. These horizontal lines look like rungs on a ladder. The vertical lines represent the control voltage.

The ladder diagram allows someone to follow the path of electricity through the switches and relays to the device that is being controlled. With an electric meter someone can troubleshoot the control system to locate a problem.

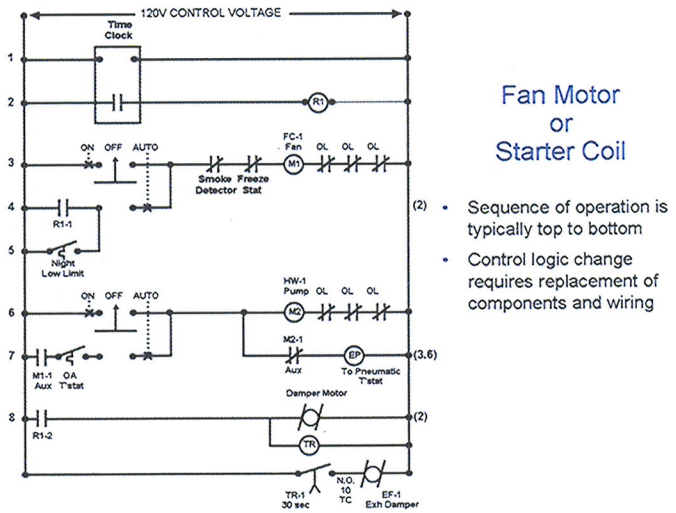

Figure 17

Electric Control Diagram

Electric Control System Requirements

The typical electric control system requires the following:

1) A specific, fixed or pre-determined control sequence of operation
2) All conditions being measured will be viewed as two possible values of acceptable or unacceptable results with no in-between values.
3) Most actuators for valve or damper control will be two-position or floating-point for modulation. The starting and stopping of equipment would be done with control voltage relays that switch power circuit contactors or equipment motor starters.
4) The control logic will be hardwired into the electric control circuit called a ladder diagram. Control of items requires direct wiring to and from the control hardware and the controlled devices.
5) Typical power availability for an electric control system would be the primary AC voltage supplied to the equipment. If this voltage is too high, then control voltage would be transformed down to something like 24 or 110 Volts AC.
6) Owner, operator, or technician monitoring is done with gauges, indicator lights or alarm systems. There is limited ability to modify the electric control systems.

Electric Control Characteristics

The logic of the electric control system is set with hardware designed for specific sequences and applications. Electric control, like pneumatic control, is not easy to change purpose or application. Such changes require hardware modifications to control components. That is why electric control systems are best suited for factory-installed packaged equipment applications.

Being "hard wired,"

Electric controls help prevent field modification of the design control sequences. In addition, when there is a need for fire or life safety sequences, electric control systems are designed with fail-safe features.

The concept of fail-safe was first used with pneumatic heating controls in northern climates. This kept building water piping from freezing if the heating controls lost air pressure. This same concept is continued with electric and electronic control systems. The heating valves are designed so they fail in an opened position allowing for maximum heat. The valve used to do this are referred to as a normally open (NO) valve. For these valves to close, a control signal is required. Cooling coil valves are normally closed (NC) and air pressure is required to open the valve. These valves will fail closed.

Electric control systems remain very prevalent at the equipment level for packaged equipment. Residential and light commercial HVAC systems commonly use electric control systems because of their simplicity and reliability. They are simple to install and troubleshoot. Electric sensors, actuators and control loops are often the cost-effective solution on many smaller commercial HVAC systems that do not use more complex sequences of control or require PI or PID algorithms.

Electronic or Direct Digital Control (DDC)

With microprocessor development (an integrated circuit that contains the entire central processing unit of a computer on a single chip), the world of HVAC controls moved into DDC (direct digital control), utilizing electronic sensors, low-voltage wiring, electronic actuators, digital computers (called controllers), and software written specifically for HVAC control sequences (made up of algorithms).

DDC controllers can be designed to be product-specific or general-purpose controllers (Figure 22).

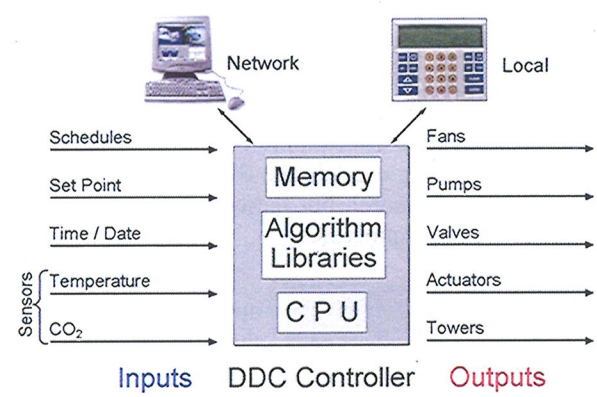

Figure 18

DDC Control System Elements

DDC systems allow for flexibility and easy monitoring of sensors and actuators. Typical HVAC control sensors and actuators require low voltage (under 24 volts) control wiring to be installed to transmit the required measured values to the controller and the software that defines the control logic. Control of devices is done with software and a microprocessor, along with appropriate input and output hardware. Functional logic is not in the hardware, but in the software, only requiring changing the software values. This allows for increased flexibility with a DDC system. In addition, all the measured value information about the DDC system is in a digital form and can be viewed for monitoring purposes or stored for archiving.

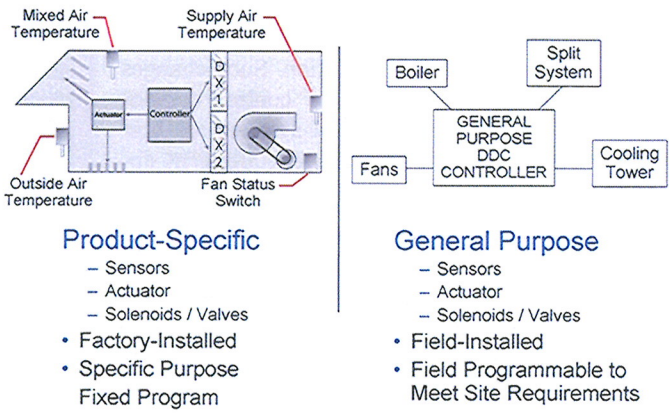

Figure 19

Types of DDC Controllers

History of DDC

The term DDC has been used for many years now, but it originated in the 1950s in the oil industry. Over time, the number of industrial process control applications of DDC control systems steadily increased. It took the energy crisis of the 1970s to bring this technology into the HVAC environment in the form of the early Energy Management Systems (EMS).

These first applications of microprocessor-controlled equipment were more of an overlay to existing pneumatic controls of the time. At that time, most large building HVAC systems used pneumatic devices for comfort control. Companies that tried to apply computer technology to these systems only overlaid the DDC controllers on top of the pneumatics, which still did the direct equipment control, but the computers monitored and, only occasionally, intervened in the pneumatic control processes.

DDC sensors,

unlike pneumatic sensors that are not extremely accurate (± 2° F), can measure more accurately (± 0.1° F), allowing for better comfort control.

Over the years, many industrial controls companies tried to apply the industrial control system to the HVAC market, but these powerful industrial control systems were beyond the needs of the typical buildings of the time.

Eventually, HVAC-specific controllers were developed that replaced the pneumatic devices with microprocessor modules and innovative software, which provided direct control using digital techniques. Computer software replaced hardware logic, but still interface with electric relays, switches, and direct pneumatic hardware for actuation purposes.

DDC System Requirements

The typical DDC system requires the following:

1) A communication bus or wiring network to connect all the controllers, either directly or indirectly, to each other.
2) Electronic sensors to measure things like temperature, pressure, CO_2 (indoors and outdoors), humidity (indoors and outdoors) to mention a few.
3) Electronic actuators for valves or damper control. The may be floating-point or full modulation, using 4 to 20 milliamp, or 2 to 10 Volt DC signals as controller output. The starting and stopping of equipment would be done similar to electric controls using relays, contactors or motor starters.
4) The control logic for the sequences of operation would be in a microprocessor controller that may be pre-programmed for a product specific application or a general purpose controller, field programmed for site-specific requirements.
5) Typical power supply for a DDC system is 24 Volts AC. Many of the controllers and microprocessors require less then 24 Volts AC to function. Lower voltages and rectification to DC voltage is performed internally to the controllers.
6) Owner, operator or technician access to view the DDC system components is through a user interface. This device consists of a PC (Personal Computer) or equipment-mounted device with vendor-specific software that will allow for monitoring and modifying the DDC controller software.

DDC Control Characteristics

DDC systems operate in controlled environmental conditions, typically indoors with specially designed systems for outdoors. The electronic actuators are not as powerful as pneumatic actuators, have limits on how quickly they open and close and they will not operate during power interruption without a backup power system. However, DDC sensors are extremely sensitive and accurate.

DDC changes

to the control logic occur through software. Typically, this requires little to no change of system hardware.

DDC information can be shared between controllers as well as with a PC to monitor the system, modify the system and generate reports about how the system is operating.

DDC Architecture

DDC systems are available in two architecture types, centralized (polling), and distributed (peer-to-peer) processing.

A centralized processing system uses a single microprocessor control panel for all the activity of the system. The individual pieces of equipment are being polled and controlled from a central DDC processor (with optional panel to the user interface, if required). They wait for commands on how to function, along with providing sensor information to the processor to help make decisions. The individual pieces of equipment cannot function completely alone. They have a safe mode they operate in if communications are interrupted. This system can have the original setup easily changed from a user interface to match operating condition changes.

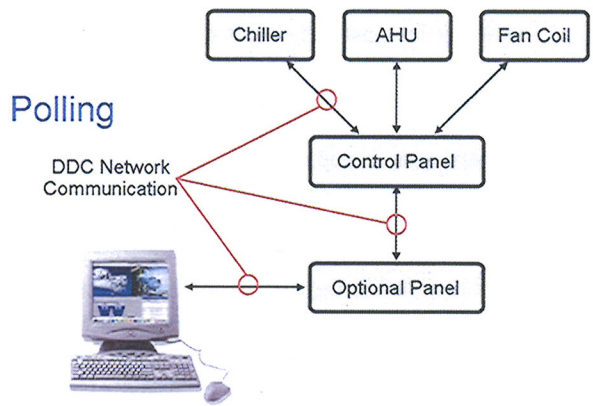

Figure 20

A centralized DDC system is hierarchical.

The other type is a distributed processing system, where activities for each piece of equipment are locally controlled and the central system (normally contained in the user interface microprocessor) is used to exchange information and monitor activities of the equipment. In this type of system, most of the equipment is designed to stand alone and run autonomously without continuing direction or instructions beyond the original setup. Here too the original equipment setups can be modified later to meet the changed job operating conditions.

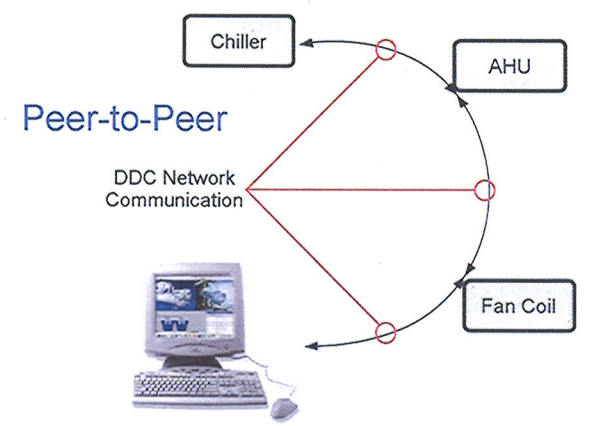

Figure 21

A Distributed DDC System Offers Stand-Alone Features.

Defining a General-Purpose Controller

Physically, a general purpose DDC controller is a control system module or "black box" that has a microprocessor (computer chip or CPU) inside, as well as all the electronics to support it and provide the signal conditioning necessary to interpret sensor readings (inputs) and to drive actuators (outputs). It also needs a source of power and usually incorporates communications ports for networking and human interface.

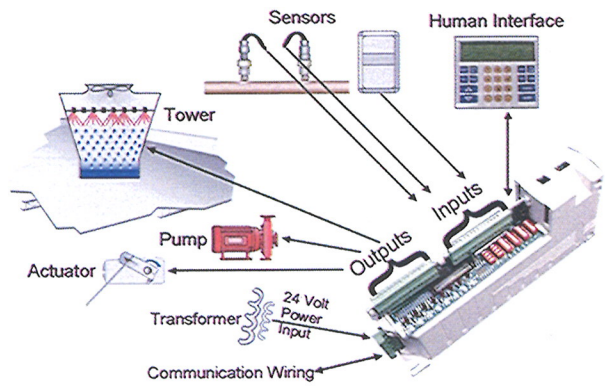

Figure 22

General-Purpose Controllers Are Programmed To Job Needs.

As with any microprocessor-based device, the DDC controller is dependent on its software, or internal programming, for proper functioning. Some of this software is the operating system which allows the computer processor to communicate digitally, process data, store information in memory, and maintain an internal clock to provide timing functions. The software that impacts the HVAC world is the family of algorithms (mathematical procedure that solves a recurrent computation) that create the control routines and programs specific to HVAC components. DDC control systems with microprocessors lend themselves to algorithm-based control logic.

Interoperability

Most DDC controllers can extend applications beyond the traditional HVAC system realm into non-HVAC areas such as lighting control.

Interoperability (ability of software and hardware on different systems from many vendors to communicate) has made integrating with lighting controllers, card access systems, and other, non-traditional HVAC building components increasingly popular. This is presented in TDP-802 the Controls, Level 2, DDC Networking.

The hallmarks of well-designed general-purpose DDC controllers are:

1) Having flexibility of input/output compliment, with sufficient numbers of inputs and outputs per controller, usually a minimum of eight of each type.
2) Versatility of control with easy programming procedures or pre-programmed algorithms to apply to the widest variety of field situations
3) The ability to custom program for non-standard or unique jobsite requirements. In these cases, the application engineer will write a custom algorithm using the custom programming language.
4) Ability to operate in a stand-alone environment without outside intervention.
5) Ability to monitor, at a PC workstation or remotely from an off-site location.
6) Ability to work with other controllers to exchange information and give commands.
7) Ability to provide alarm reporting.

DDC Network

DDC systems rely on a communication network that links all of the equipment and devices together on a common network. This network is used for both information exchanges as well as for direct control. Some of these network systems are simple three-wire networks and others are Ethernet-based (industry standard local area network using coaxial cable) systems. Technology is constantly changing, allowing the combining of different DDC networks to operate together.

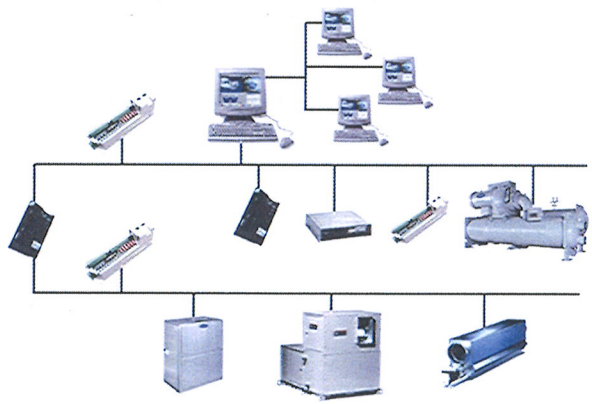

Figure 23

A DDC Network Links All System Controlled Devices.

User Interfaces

DDC systems are, for the most part, electronically based control systems. The factory mounting of analog readouts on equipment is no longer seen. Therefore, some form of monitoring capability is required. This monitoring is done with what is call a user interface or "front-end." This interface can be equipment-mounted digital displays, hand-held devices that plug into equipment, or computer based software that all use the DDC network to gather information. Their purpose is to provide access to the operating conditions of the HVAC system by displaying information about the equipment, along with modification of the equipment sequences of operation.

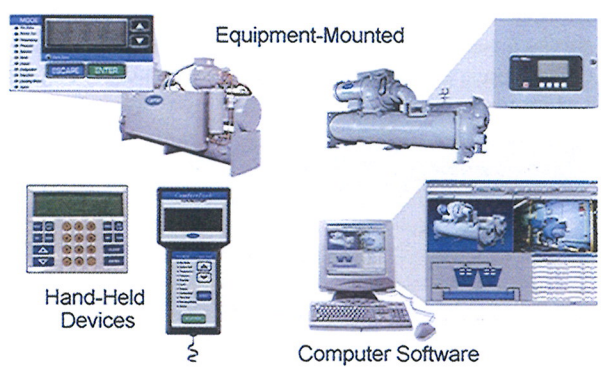

Figure 24

User Interfaces Are Available At Many Locations.

Direct Digital Control Theory

DDC operates by means of mathematical formulas imbedded in software that runs continuously in a microprocessor. Therefore, when compared to traditional pneumatic or electric control, DDC systems are unique in the way they operate regardless of the control action. However, the result of proportional DDC control action is not unlike a pneumatic control loop. Therefore, we will start there to illustrate the proportional control concept.

Control Loops

Control loops have to do with how a device is being controlled. In the DDC environment, a control loop can be called an algorithm. An algorithm is a mathematical procedure that solves a recurrent computation. In controlling a device with a DDC system, an algorithm is used to define how a device is going to be controlled as well as what requirements are monitored and what action is taken at the output. A simple example would be a mixed air damper control loop, where the leaving air temperature is the monitored condition and the blending of two airflows of different temperature are what is being controlled. The word loop implies that the action ends up back where it started. A DDC control loop looks at the action taken at the output and insures that the action is correct. If the actions are not correct then the output is changed or modified to obtain the correct or desired result.

Open-Loop

An open-loop control algorithm is one where the action being given at the output is not monitored. All that happens is that a signal or command is given by the controller for an action to happen. As an example, when a DDC system is acting like a time clock and is just providing a command for something to go on or off based on a time schedule.

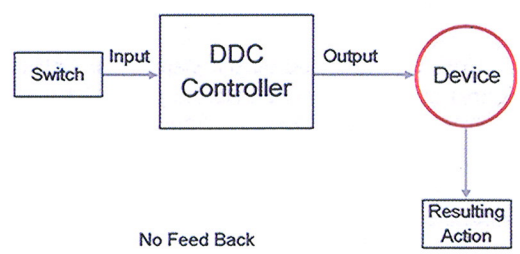

Figure 25

Open-Loop Control Operates Blind.

Closed-Loop

A closed-loop control algorithm is one where the action being given at the output is monitored. The DDC software is written to monitor actions taken (feedback). A DDC system can look at related measured values in the decision making process to more precisely determine the correct action to be taken. Measured values can be used by more than one algorithm, closed-loop control monitoring actions provide increased control accuracy.

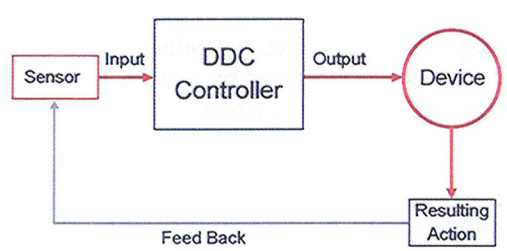

Figure 26

Closed-Loop Control Monitors The Action.

Control Point Classification

A control point is a single input or output connected to a controller. Control points are used by a DDC system in its activity of providing HVAC control. Some of the information that these points contain comes from sensors or are calculated within the controller and sent out to execute the algorithm. Control points are physically connected to the controller and are referred to as hardware points, such as thermostats or damper actuators. A points list is created from all the points needed to execute the HVAC system sequences of operation. Examples of typical points are shown in the next section. This is separate from software points within a controller that are used for calculations. Examples of software points are set point tables, current date and time, and time schedules that determine occupied and non-occupied.

There are 4 types of control points used in HVAC control. As a mater of fact, there are only four types of control points used on any control system, even missiles or airplanes. These control points are broken down into two groups that consist of inputs and outputs. The inputs provide the information that is used by the different algorithms to make decisions that will result in actions being taken via the outputs.

Time Cycles

Typically, in the HVAC system, we would not look at a parameters in fractions of a second or even seconds, but more like minutes, and with outside air, temperature would be looked at every 15 minutes or more.

The only difference between an HVAC control system and that of a missile is the speed at which these inputs are looked at, decisions are made and action taken at the outputs. A missile moving a 600 mph or 880 ft/sec needs to do several thousand observations per second to assure that correct decisions are made.

Both the input and output groups are further broken down into two types: discrete (digital or binary) and analog. The discrete points have only two states. One state represents a true or on condition, and the other is a false or off condition. In the HVAC industry, discrete input points would represent fan and filter status, and minimum position switch, while discrete output points would be to turn on fans and pumps, open solenoid valves, and energize relays to stage on equipment. The analog points are variable points that are represented as dynamic values that continuously change with time. In the HVAC industry, analog inputs would be temperature, static pressure, and airflow. The analog outputs would control chilled water valves, hot water valves, bypass valves, mixing valves, inlet guide vanes, variable frequency drives, and damper actuators.

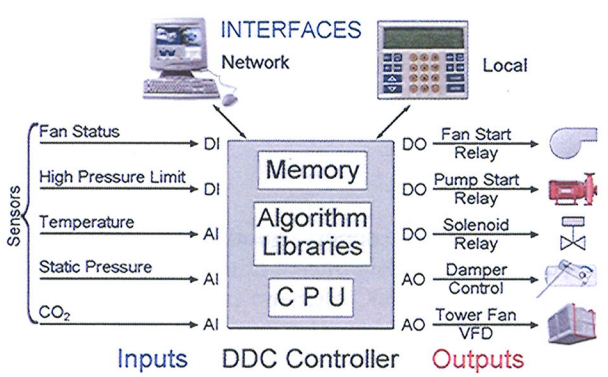

Figure 27

Control Point Types Are Only Four In Number (AI, DI, AO, DO).

Typical Input and Output Channel Signals

In DDC systems, inputs and outputs are discussed in relation to hardware points. These points are items physically attached to the controller channels (or wiring terminals) like sensors, switches, actuators and relays. These inputs and outputs take some form of an electrical signal or characteristic. Voltage, current, and resistance are commonly used to represent temperature, flow, volume, status, position (percent open/closed) or commands (start/stop).

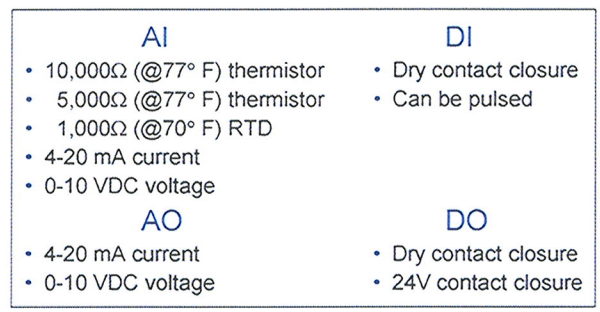

Figure 28

Typical I/O Channel Signals

For a DDC system to understand analog signals, the signals have to be processed and converted into a digital or numeric value that a microprocessor can use. The physical input and output points are connected to specific input and output channels of the microprocessor that are designed to convert these signals. This conversion will change the input analog signal from a sensor into digital or numeric value the controller can process and evaluate. The controller then converts the output digital or numeric value into an output signal that can be using by an actuator or a VFD speed controller. Figure 25 shows the typical signals seen from a sensor or sent to an actuator.

Analog Input (AI)

Analog inputs are seen from sensors that provide information about a range of conditions. These sensors will provide either a variable resistance (Ohms), or a milliamp (4 to 20 ma) signal or voltage (0 to 10 vdc) signal to the controller to represent the measured value. The magnitude of these signals will represent specific values of things like temperature, pressure, flows, or levels (CO_2). In the DDC world, software analog information like time, date, occupancy schedules, and set point tables are added to help make decisions that will affect how the output points respond.

Discrete Input (DI)

Discrete inputs originate from switched inputs. They are two-state signals represented by open or closed contacts that will be used to represent if something is on or off, opened or closed. There are no in between conditions.

Analog Output (AO)

Like the analog input the analog output provides either a variable milliamp (4 to 20 ma) signal or voltage (0 to 10 vdc) signal outputs. These output signals will control things like variable frequency drive speed, a desired valve position, or a damper position.

Discrete Output (DO)

Like the discrete input, the discrete output is a two-state signal that is represented by a change of state. The output will change state from one condition to another. This would be used to energized relays to stop and start equipment or devices. There are no in between conditions.

Points List

A points list is normally prepared to compliment the system diagrams and sequences of operation by summarizing all the required hardware points for each system and defining the functions each point serves. The list of points is a summary of the DI, DO, AI, or AO points and whether the AI or AO points have voltage or milliamp signals. Functions such as alarm limits, graphical display criteria, and report criteria are selected for many of the points.

Without a points list, controls vendors may estimate different control functions for each output point or may not provide the necessary input points to effectively control each system. This will also limit the ability to monitor the control system using one of the different front-end systems to keep track of what the specific system is doing.

Job Name: **Input/Output Point List Summary**

System Apparatus or Area Point	Analog In: Measured: Duct Temperature	Pipe Temperature	Temperature	Relative Humidity	Pressure	Other	Calc: KWH	Enthalpy	Run Time	Efficiency	Discrete In: Status	Filter	Smoke/Fire	Freeze	Hi - Lo	Other	Outputs: D/O: On - Off	Open/Close	Enable/Disable	A/O: Speed Control	Damper Position	Valve Position	Other	System Features: Alarms: Hi Analog	Low Analog	Hi Discrete	Low Discrete	Status	Programs: Time Scheduling	Demand Limiting	Duty Cycle	Staging Control	Enthalpy Optimization	Reset	PID Algorithm	Nighttime Free Cooling	Damper Optimization	Power Fail Restart	Night Setback	Sensor Averaging
AH1																																									
Location:																																									
Space Air Temp(2)			X																																						X
Supply Air Temp	X																																								
Mixed Air Temp	X																																								
Filter Status												X																														
Static Pressure					X																																				
Outside Air Temperature			X																																						
Return Air Temp	X																																								
Fan Status											X																	X		X											
Mixing Dampers																	X																									
Cooling Coil Valve																						X													X						
Speed Control																				X															X						
Start/Stop																	X																									

Figure 29

A Points List Tabulates System Requirements.

DDC Design for HVAC Equipment

When controlling a rooftop unit, one has to understand what is needed to make the equipment perform in the manner desired. This information is usually conveyed by the designer through written sequences of operation that are contained in the project specifications or noted on the drawings.

One of the things needed is to create a list of control points. How many DI, AI, DO and AO points are needed to receive the sensor input, send the actuator commands and communicate with the rest of the system to obtain global information and report alarms? What time schedules, set points, and safety requirements are needed?

Rooftop Unit Example

This example is a typical rooftop application for a single-story retail building with an open common area.

HVAC Equipment: A constant volume rooftop unit with no factory-integrated DDC control as follows:

- Supply fan
- Two stages of DX cooling
- Two stages of electric heat
- Linked outdoor air/return air dampers

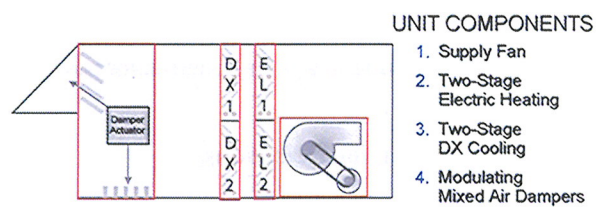

Figure 30

Rooftop Unit Example

Step 1 – *Desired Control Strategies*

Temperature Control: Maintain average space temperature at 75° F for cooling and 70° F for heating during occupied times. During the unoccupied times the average space temperature will be 80° F for cooling and 64° F for heating.

Sensor Averaging: There will be 2 temperature sensors at each end of the common area with the average value being used to control the unit.

Mixed Air Damper control: When outside air temperature is >5° F below the room cooling set point, dampers will modulate to allow additional outdoor air for economizer operation.

Fan Status: A differential pressure switch across the fan inlet and outlet provides indication of fan operation.

Time Scheduling: A time schedule is required to determine when the common area is occupied and unoccupied. This schedule will contain the time periods used to sequence the equipment conditioning the common area.

Set Point Table: A temperature set point table is needed to compare against the average sensor temperature value. This will contain all the temperature control values that the unit will be required to control to, based on the time schedule.

Step 2 – *Desired Controlled Devices*

Based on the rooftop unit components, the following points need to be connected to controller output channels:

AO: One analog output required to operate the economizer function of the outdoor/return air dampers.

DO: There are several discrete outputs required as follows:

- One supply fan start/stop relay
- Two relays for the DX cooling stages
- Two relays for the electric heat stages
- One variable current or voltage output for positioning the outdoor air/return air dampers

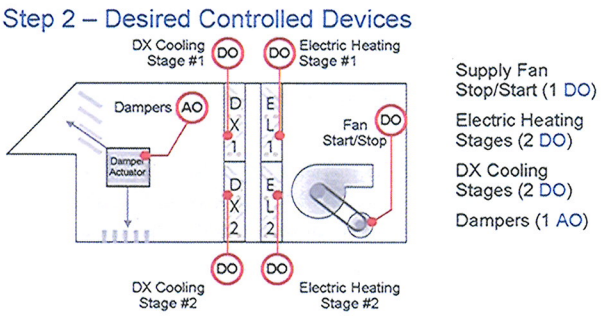

Figure 31

Desired Controlled Devices

Step 3 – *Control Action Selections*

With the simple electric controls used on the rooftop unit, most of the DDC control strategies can be implemented by using two-position control action connected up as follows:

DO: An algorithm is required to act as a typical staged thermostat with nighttime temperature setback. This will control the fan, 2 stages of DX and the 2 stages of electric heat.

AO: An analog algorithm is required to control the linked outdoor air/return air damper.

Additionally, 2 sensor points are used to get the common area average temperature (a sensor-group averaging algorithm is needed), and one is used for the outside air temperature. These are considered global points because they can be shared on the DDC network.

Step 4 – *Sequences of Operation*

With everything properly selected, wired, and configured, the rooftop unit will be controlled as follows:

- Set point for occupied mode cooling is 75° F and for heating is 70° F. System will control to the average of the two space sensors as determined by the sensor-group averaging.
- Occupied or unoccupied mode is determined by time schedule, which is set by the user in advance by time-of-day, day-of-week, and identified holiday periods during the year.
- In the occupied mode, both DX cooling stages will energize when the space temperature is 3° F (adjustable) above the set point; then stage one and stage two will de-energize one at a time as the set point is approached. The heating stages will react similarly if the space temperature is well *below* the set point.
- The supply fan will run continuously during occupied mode and any time there is a call for cooling or heating during the unoccupied mode.

- In the unoccupied mode, if the space temperature goes below 64° F or above 80° F, heating or cooling will be called for, respectively.
- During the unoccupied cooling period (from 12 a.m. to 7 a.m.), when the outside air temperature is below 58° F, the outdoor air damper cycles fully open, with the return damper fully closed, and the supply fan starts and runs until the space reaches 65° F. Then the fan turns off and the outdoor air damper returns to its minimum unoccupied position.

All of this is made possible with the proper selection of a few sensors and actuators, five resident algorithms, a time schedule, and a temperature schedule.

Steps 5 and 6 – *Sensor Selection/Input Control Devices*

AI:

- One outside air temperature thermistor
- One supply air temperature thermistor
- Two space temperature thermistors located to reflect typical occupancy patterns

DI:

- One supply fan status switch (in this case, a differential pressure switch has been selected to be inserted in the air stream, which provides proof that the supply fan is working)

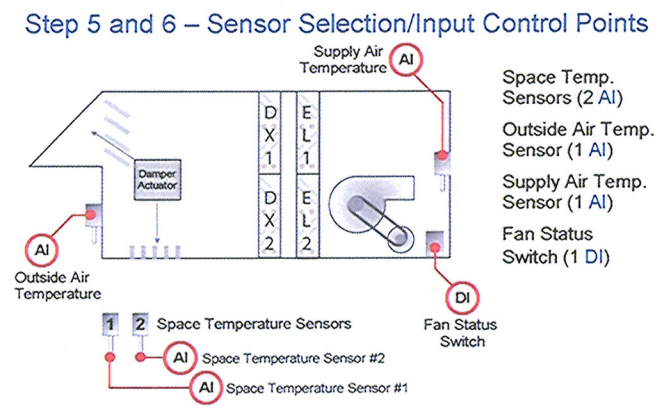

Figure 32

Sensor Selection/Input Control Points

Step 7 – *Required Controller Channel Capacity (or points required)*

The rooftop unit needs channels for six outputs and five inputs on this job. Because a typical DDC controller allows up to eight input and eight output channels, only one control module is required to adequately handle the job.

Rooftop Unit System Diagram

Now that the controls design has been completed, a system diagram is used to present to the controls contractor the location and types of control devices and sensors needed. This also gives the quantity of inputs (AIs and DIs) and outputs (AOs and DOs) being used for the control strategies used on the rooftop unit example. This information can be used to troubleshoot the job and equipment operation in the future.

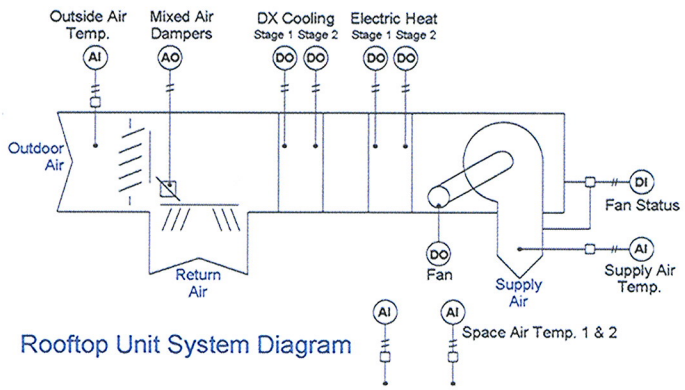

Figure 33

Rooftop Unit System Diagram

Summary

An understanding of the fundamentals of HVAC controls begins with the differences between the term controls used as a noun and the verb control. Control actions (focusing on P, PI, and PID) complete the building blocks for the major control system types. Regardless of type, all control is accomplished with either an open-loop or a closed-loop control.

Direct Digital Control (DDC) is used in some form on most present day HVAC systems. Even though electric control is built into most equipment, the backbone of the system higher logic is formed using DDC product-specific pre-programmed controllers and general purpose field-programmable controllers. Each of these control devices has unique and different functions.

The typical DDC system is composed of inputs (i.e. sensors, switches, time, date, occupancy, and set points), a controller (with memory, a library of pre-programmed algorithms and a microprocessor), and outputs (i.e. relays, actuator for dampers and valves, along with signals for VFD drive, etc.). The inputs and outputs are referred to as points, with the overall number of points needed for control determining the kind of DDC controller that is needed.

A multi-step design process was used on an example for designing DDC for a rooftop unit. This process allows the designer to decide what control strategy is needed, determine the devices that need to be controlled, and create the resulting points list.

Work Session 1

1. Differentiate between the words "control" and "controls". _____

   a. Control is one device and controls are more than one device.
   b. Control is a verb meaning action and controls is a noun meaning devices that control things.
   c. Control is comfort and controls is more comfort.
   d. Control is directing equipment and controls is equipment controlling itself.

2. The purpose of a control system is to _____.

   a. eliminate an operator
   b. add to the expense of a building
   c. allow for automation of comfort control, along with energy efficiency, and safe operation of building equipment
   d. allow only one person to control everything in a building

3. What are the different kinds of control actions used in the control of a device? (Pick all that apply) _____

   a. Two-position control
   b. Timed two-position control
   c. Fast control
   d. Floating-point control
   e. Sinking-point control
   f. Proportional control
   g. Proportional + integral control
   h. Proportional + integral + derivative control
   i. Standard control

4. What do the letters P, I, and D stand for in the HVAC controls environment? _____

   a. P is power, I is intensity, and D is diverting
   b. P is passive, I is instant, and D is demand
   c. P is proportional, I is integral, and D is derivative
   d. P is positive, I is indirect, and D is displacement

5. Two weaknesses of proportional control action are _____.

   a. limited response and no sensitivity
   b. extreme sensitivity and constant adjustment to error
   c. ability to get to set point rapidly and constant adjustment for constant error
   d. inability to get to set point and no adjustment if error is constant

6. What is the characteristic of Proportional control? _____

   a. The output response is proportional to the error and does not change over time with a constant error.
   b. The output response is proportional to the error and does change over time with constant error.
   c. The output response is proportional to the error, along with the change in the error and does change over time with constant error.
   d. None of the above

7. What is the characteristic of Proportional plus Integral control? _____

   a. The output response is proportional to the error and does not change over time with a constant error.
   b. The output response is proportional to the error and does change over time with constant error.
   c. The output response is proportional to the error, along with the change in the error and does change over time with constant error.
   d. None of the above

8. What is the characteristic of Proportional plus Integral plus Derivative control? _____

   a. The output response is proportional to the error and does not change over time with a constant error.
   b. The output response is proportional to the error and does change over time with constant error.
   c. The output response is proportional to the error, along with the change in the error and does change over time with constant error.
   d. None of the above

9. PID control action is not always needed for HVAC systems because _____.

   a. this control action is too expensive for HVAC control
   b. this control action is not sensitive enough for the most HVAC applications
   c. this control action is unnecessary for most HVAC applications because HVAC systems are slow-responding and have large thermal inertias
   d. this control action just does not work for HVAC systems.

10. The most common control action for the cooling coil valve, hot water coil valve, mixed air damper and inlet guide vane actuator is _____.

    a. P - proportional control only
    b. PI - proportional + integral control only
    c. PID - proportional + integral + derivative control
    d. None of the above

11. The three most common HVAC controls systems used today are _____.

    a. system powered control
    b. pneumatic control
    c. fluidic control
    d. electric control
    e. hydraulic control
    f. direct digital control

12. DDC stand for _____.

    a. D is direct, the next D is demand, and C is computer
    b. D is direct, the next D is digital, and the C is control
    c. D is distributed, the next D is digital, and the C is controllers
    d. D is demand the next D is digital, and the C is control

13. A typical DDC controller consists of _____ .

    a. front-end, actuators, and time clocks
    b. memory, algorithm library, and a micro-processor
    c. valves, relays, and solenoids
    d. sensors, switches, and relays

14. The two general types of DDC systems are around _____.

    a. a specific task pre-programmed controller and a general purpose field programmable controller
    b. a hard-wired controller and a wireless controller
    c. a non-programmable controller and a time clock
    d. an AC-powered controller and a DC-powered controller

15. What items in a DDC system operate differently than traditional pneumatic or electric control system? _____

    a. There is no difference
    b. The logic for DDC is in the software and can easily be changed
    c. The logic for pneumatic and electric control is in the hardware and cannot be easily changed
    d. b and c

16. A centralized DDC system controller _____.

a. is put in a corner by itself
b. cannot be next to another controller or it causes problems
c. once programmed, does not need other controllers, computers or devices to function
d. is the only controller on the job

17. When the measured value moves higher than the control value, then goes below the control value, it is described as _____.

a. too high and too low
b. overshoot and undershoot
c. a loss of control
d. a stable control system

18. In a DDC system with proportional control only, the measured value will never reach the control value. The difference between these values is referred to as _____.

a. change
b. misalignment
c. offset
d. sensitivity

19. How many design steps are there with a DDC system? _____

a. Just 1 step
b. 7 steps
c. As many steps as it takes
d. None of the above

20. Which design step is most useful for determining the quantity of control points required on the DDC controller? _____

a. The first step, desired controls strategies
b. Inputs, outputs, and a controller
c. Step 7, the controller channel capacity
d. None of the above

References:

Haines, Roger W. and Hittle, Douglas C. *Control Systems for Heating, Ventilating and Air Conditioning* (6th ed.). Norwell, MA, 2003, Kluwer Academic Publishers.

Haines, Roger W. HVAC Controls Through the Years, 2-parts. *HPAC Engineering,* March/April 2002.

Hartman, Thomas B. *Direct Digital Control of Building Systems.* New York, 2001, McGraw-Hill.

Work Session Answers

1. b.
2. c.
3. a., b., d., f., g., h.
4. c.
5. d.
6. a.
7. b.
8. c.
9. c.
10. b.
11. b., d., f.
12. b.
13. b.
14. a.
15. d.
16. c.
17. b.
18. c.
19. b.
20. c.

Prerequisites:

An understanding of air conditioning equipment and systems, along with psychrometric, mechanical refrigeration, and comfort control principles that are controlled by control systems. This knowledge can be gained from: TDP-103, Concepts of Air Conditioning;TDP-201, Psychrometrics, Level 1: Introduction; TDP-400, Principles of Mechanical Refrigeration; and TDP-702, Comfort Control Principles.

Learning Objectives:

After reading this module, participants will be able to:

- Define the differences between controls (noun) and control (verb).
- Identify and list characteristics of major control actions.
- Recognize the three major control systems and to list the differences.
- Explain what open-loop and closed-loop control systems are and how they differ.
- Describe what a Direct Digital Control (DDC) system is and how it differs from other control systems.
- Identify the major components of a DDC system.
- Define control points in a DDC system, their use, and how they are classified.
- Explain what an algorithm is and how it functions in an HVAC control system.
- Evaluate a points list for a control system or piece of equipment.
- Explain the differences between analog and discrete signals and how they work in control systems.

Supplemental Material:

Form No.	Book Cat. No.	Instructor Presentation Cat. No.	Title
TDP-802	796-075	797-075	Controls, Level 3, DDC Networking

Instructor Information

Each TDP topic is supported with a number of different items to meet the specific needs of the user. Instructor materials consist of a CD-ROM disk that includes a PowerPoint™ presentation with convenient links to all required support materials required for the topic. This always includes: slides, presenter notes, text file including work sessions and work session solutions, quiz and quiz answers. Depending upon the topic, the instructor CD may also include sound, video, spreadsheets, forms, or other material required to present a complete class. Self-study or student material consists of a text including work sessions and work session answers, and may also include forms, worksheets, calculators, etc.



Carrier Corporation
Technical Training
800 644-5544
www.training.carrier.com

Form No. TDP-801A
NEW

Cat. No. 06-796-074
NEW