Optimize Your Chilled Water Pumping

Thinking Buildings 2015

be
think
innovate

GRUNDFOS

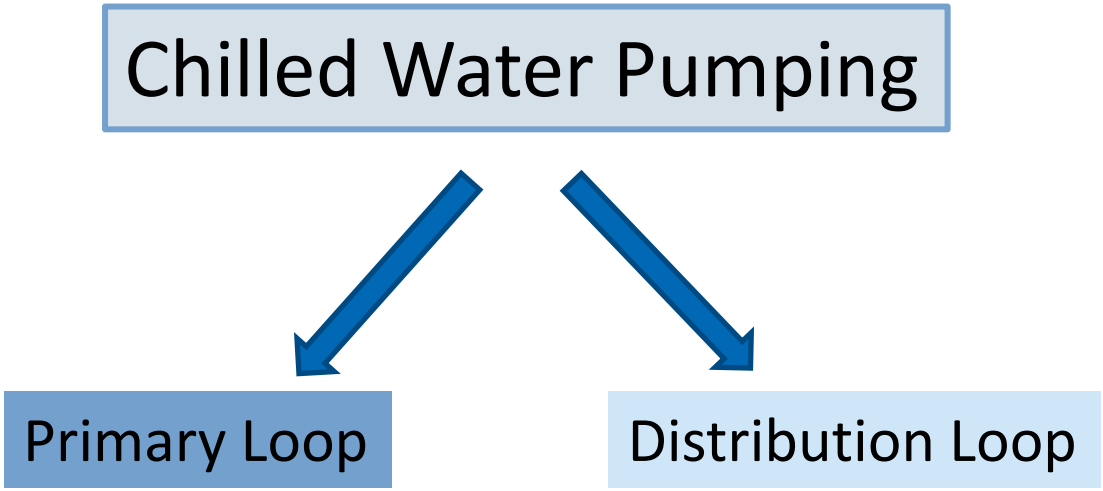
Chilled Water Pumping
Primary Loop
Distribution Loop

Primary Loop

The Primary Chilled Water Pump

End-Suction Or Split-Case?

COMPARISON OF END-SUCTION VS. AXIAL SPLIT CASE

- Much better at handling flows at Q>3500gpm (approx. 800 m^3/hr.) – Split case has double suction impeller vs. Single Suction for end-suction.
  - Less losses entering/exiting impeller (i.e. shock, recirculation, and turbulence)
  - Better NPSHr characteristics for the Spitcase pump.
- Between bearing design is inherently stiffer, thus lower deflection, thus seal & bearing life increased. Especially in upset conditions (i.e. operation off of Best Efficiency Point). Splitcase Pump is more forgiving.
- Nozzle load capability greater, thus more robust in field situations and less prone to alignment issues.
- Very little axial load because of double suction (i.e. hydraulically balanced). Less load on bearing, thus greater life.
- No need for axial thrust balancing (pump out vanes or holes), thus efficiency is better.
- Servicing the rotating element requires a simple removal of the upper case. Pipe work can be left in place

COMPARISON End-suction vs. Splitcase Flowrates >3500 GPM (800 m3/hr)

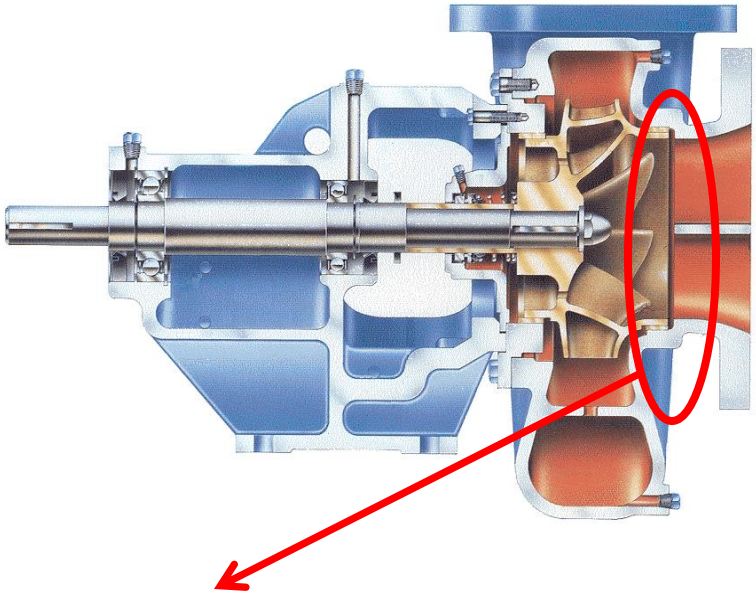

Single Suction less impeller eye area. Risk of higher NPSH requirements, Higher entrance & exit losses. There is also more possibility for turbulence & recirculation

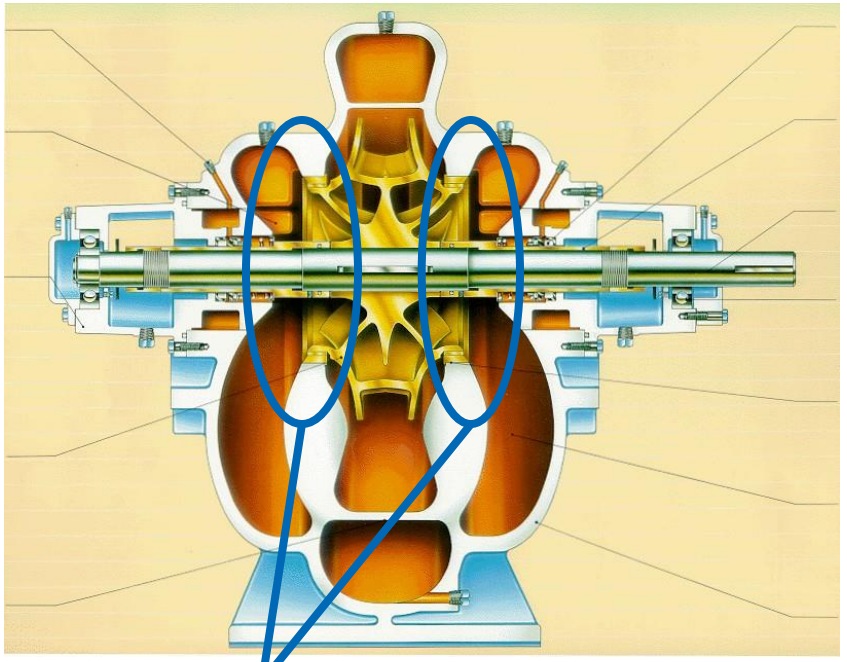

Double Suction impeller. Higher impeller eye area. Better NPSH requirements. Lower entrance & exit losses. Less possibilities for turbulence & recirculation.

COMPARISON End-suction vs. Splitcase

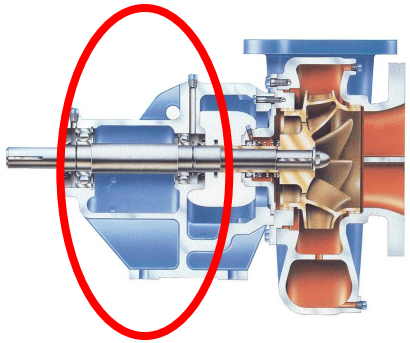

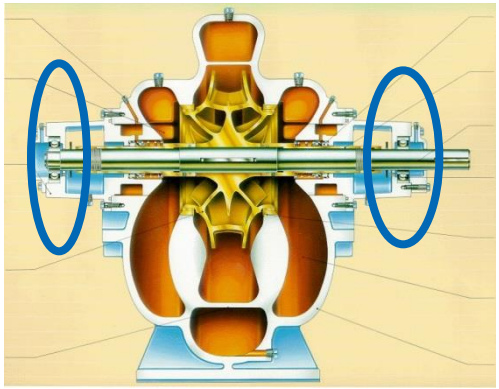

End-Suction – Impeller is cantilevered. The result is a less stiff rotor design. This design does not handle as high radial loads as well. Shaft deflection higher at the seal & bearings at higher flows & upset conditions in the system.

Double Suction impeller – Impeller is between the bearings. This design has a stiffer rotor design. Less shaft deflection at the seal & bearings at high flowrates & upset conditions. in the system.

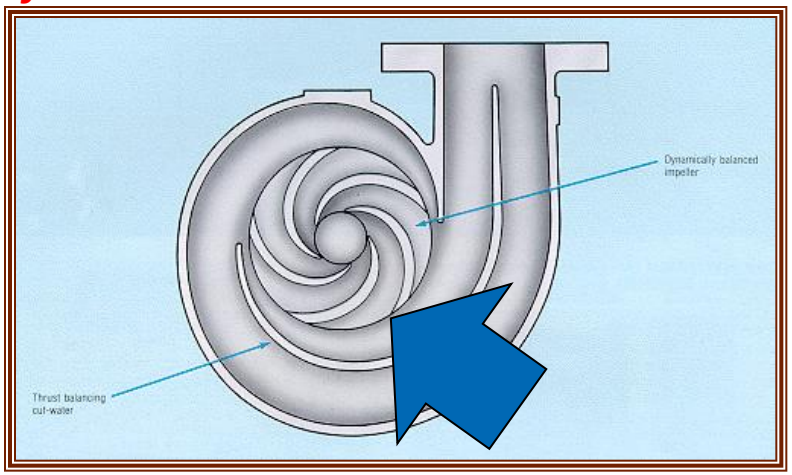

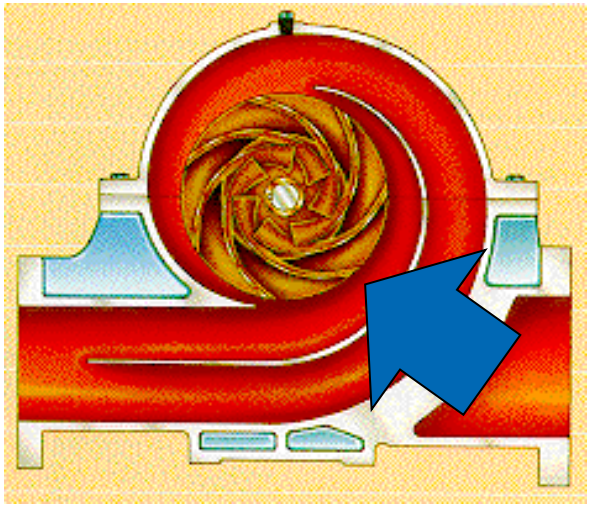

COMPARISON End-suction & Splitcase Piping Loads

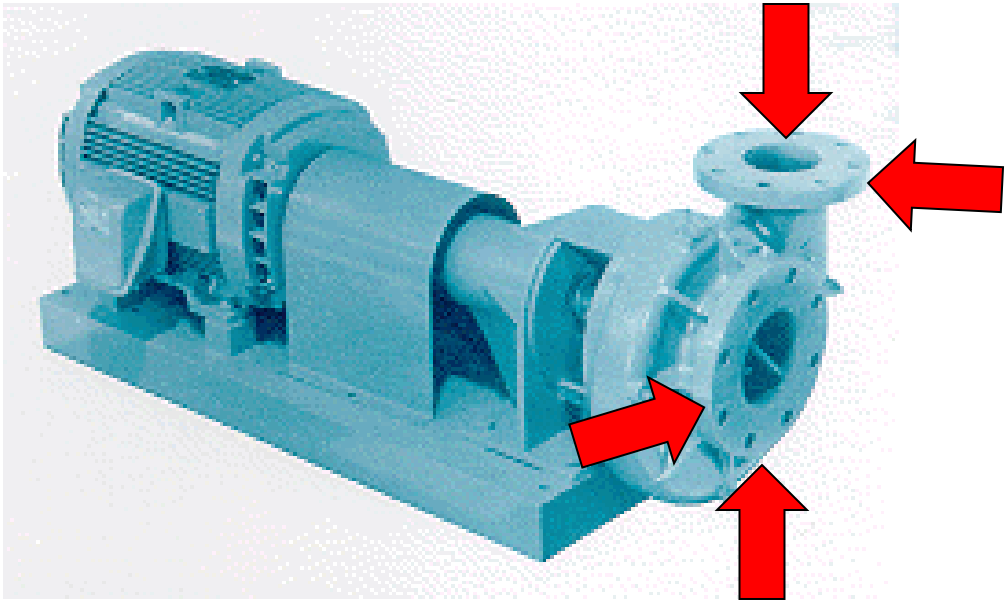

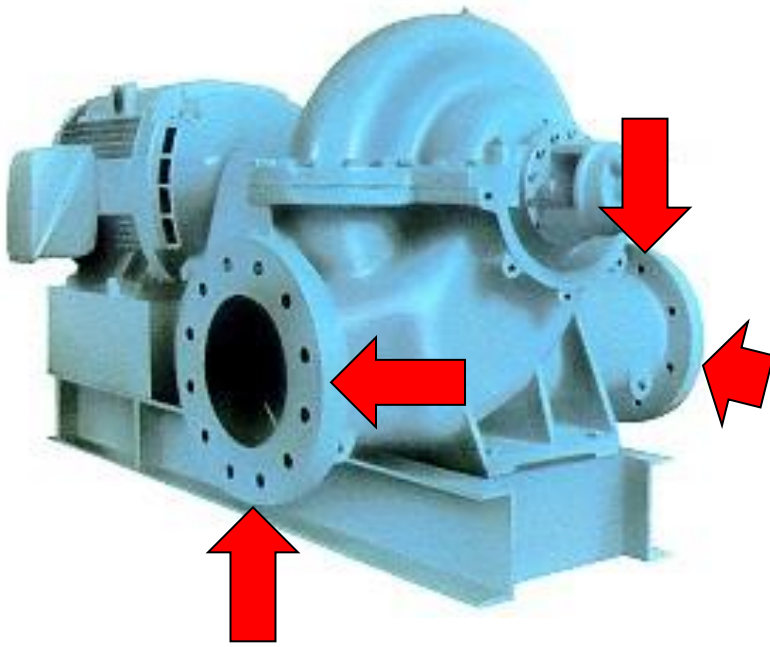

End-suction – Because the shaft/impeller are cantilevered & the nozzle locations, this design is more susceptible to pipe stress issues. Any casing displacement can result in interference with the casing & the rotating components.

Splitcase – Because the impeller is between bearing & the nozzles are more symmetrical to the loads, this design is more forgiving to pipe stress issues. If you had the same nozzle loads, the casing displacement at the rotating components will be less.

COMPARISON End-suction vs. Splitcase

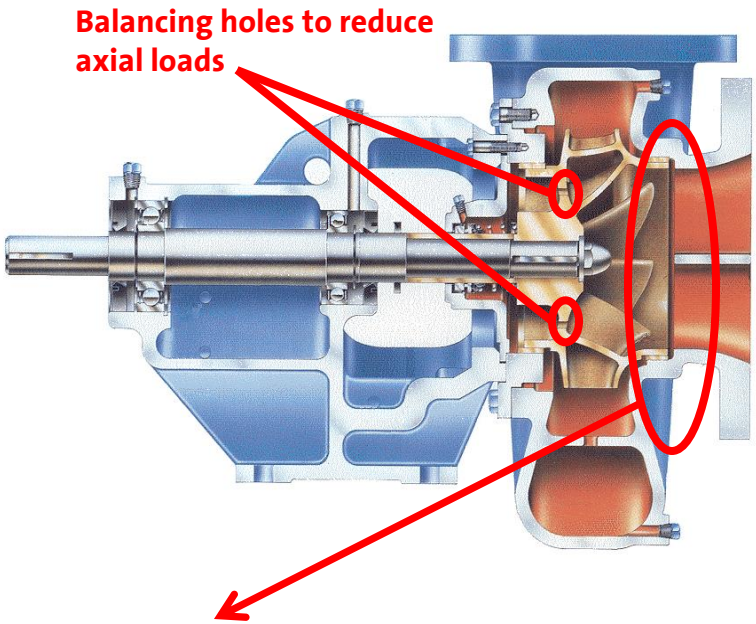

Single Suction – the impeller is not hydraulically balanced. Either will have high axial thrust loads or requires balancing holes to reduce the axial loads. Balancing holes increase recirculation decreases pump efficiency.

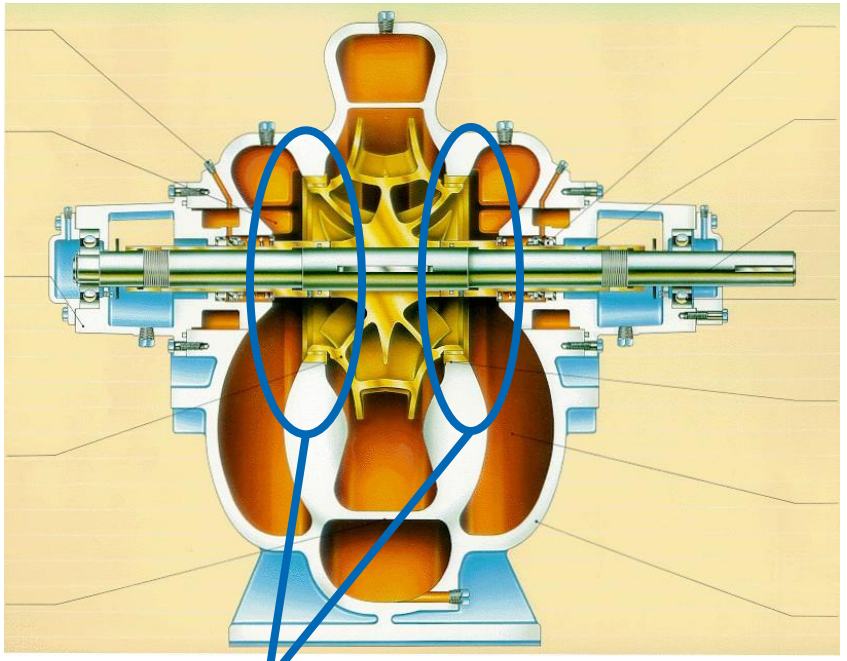

Double Suction impeller – the impeller is hydraulically balanced. The result is very low axial thrust loads on the bearings. No balancing holes required less recirculation (Higher Pump Efficiencies). Low axial thrust loads result in higher L10 bearing life.

COMPARISON End-suction vs. Splitcase

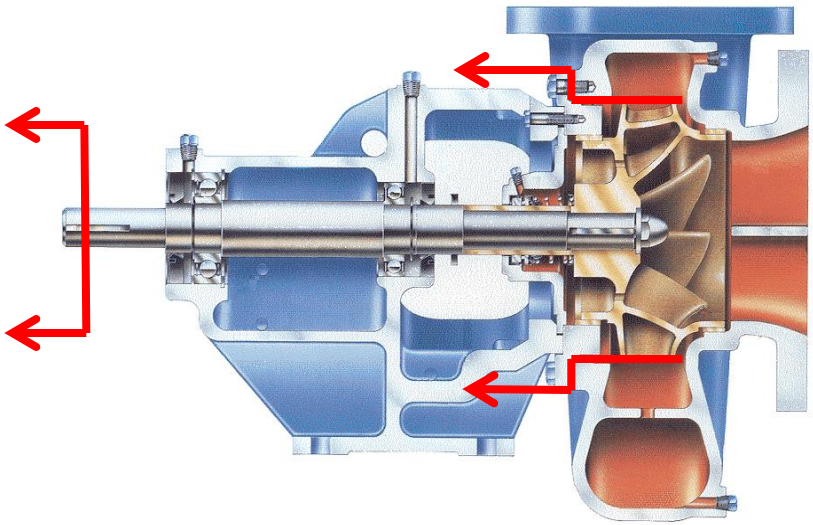

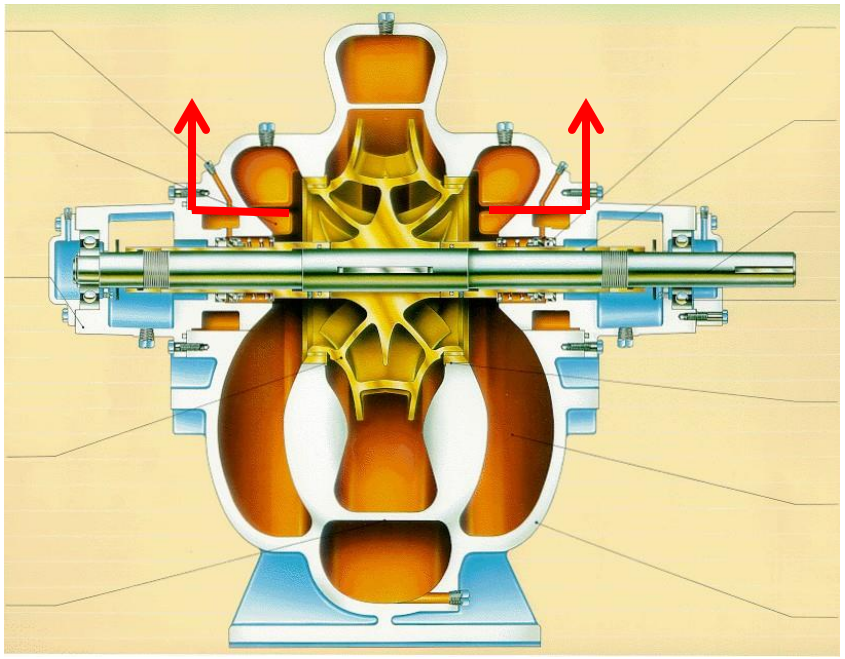

End-suction – the pump/motor spacer coupling must be removed. After that, the bearing assembly & rotating assembly must be removed in order to change out the seal.

Split case pump – the bearing housing assembly needs to be removed & then the top half of the casing removed to access the seal. Note PACO has a better option. (See next slide)

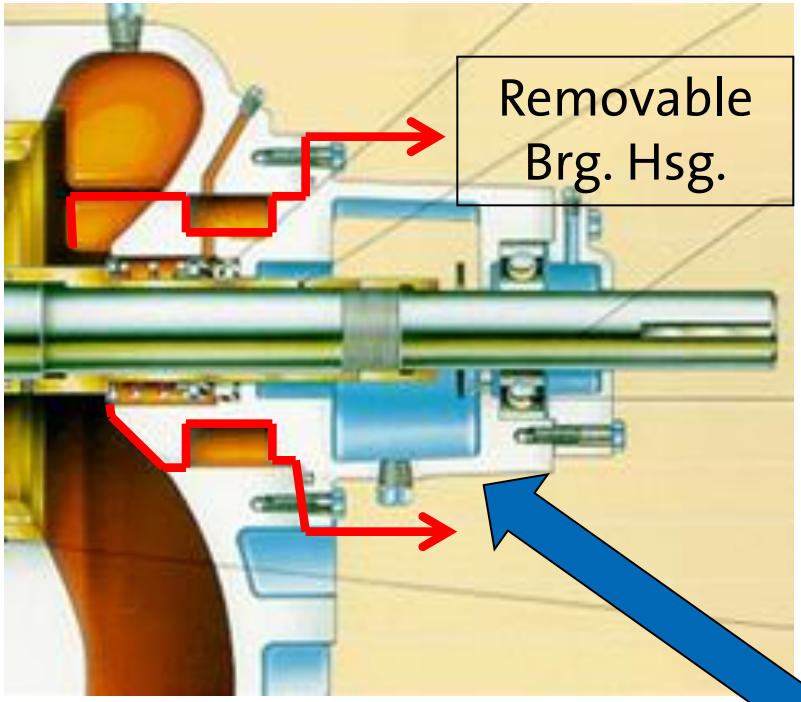

- Removable Brg. Housings – Allows Mech. Seals to be changed without having to remove the top half of the pump casing.
  - More expedited seal change
  - Use a Std. Type 1 JC Seal & still get the effect of a cartridge seal design.
  - Less down time
  - Less maintenance cost

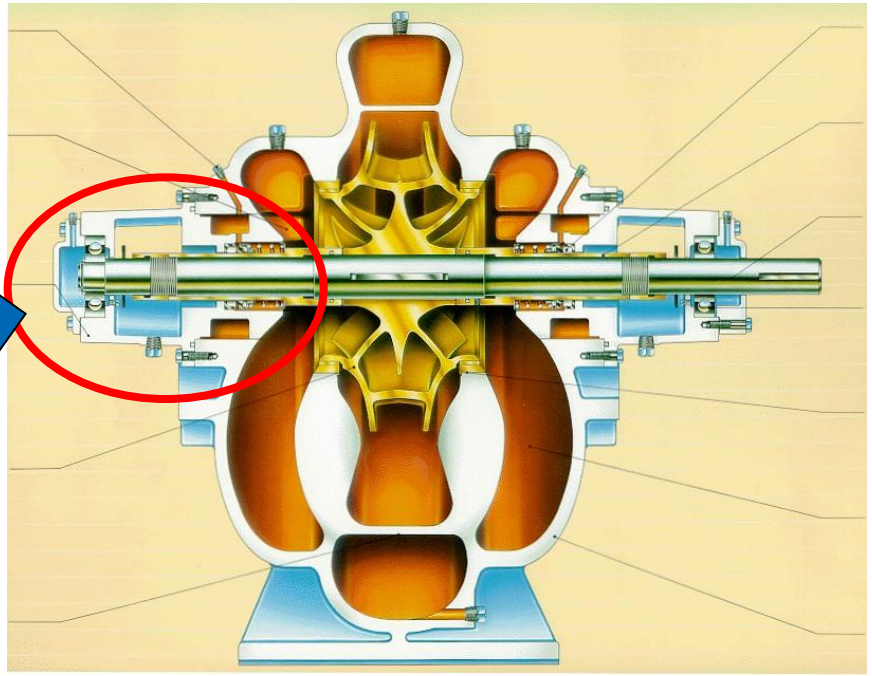

- In order to change the mechanical seal, the top halve of the casing has to be removed & then the rotating assembly removed to replace seal.

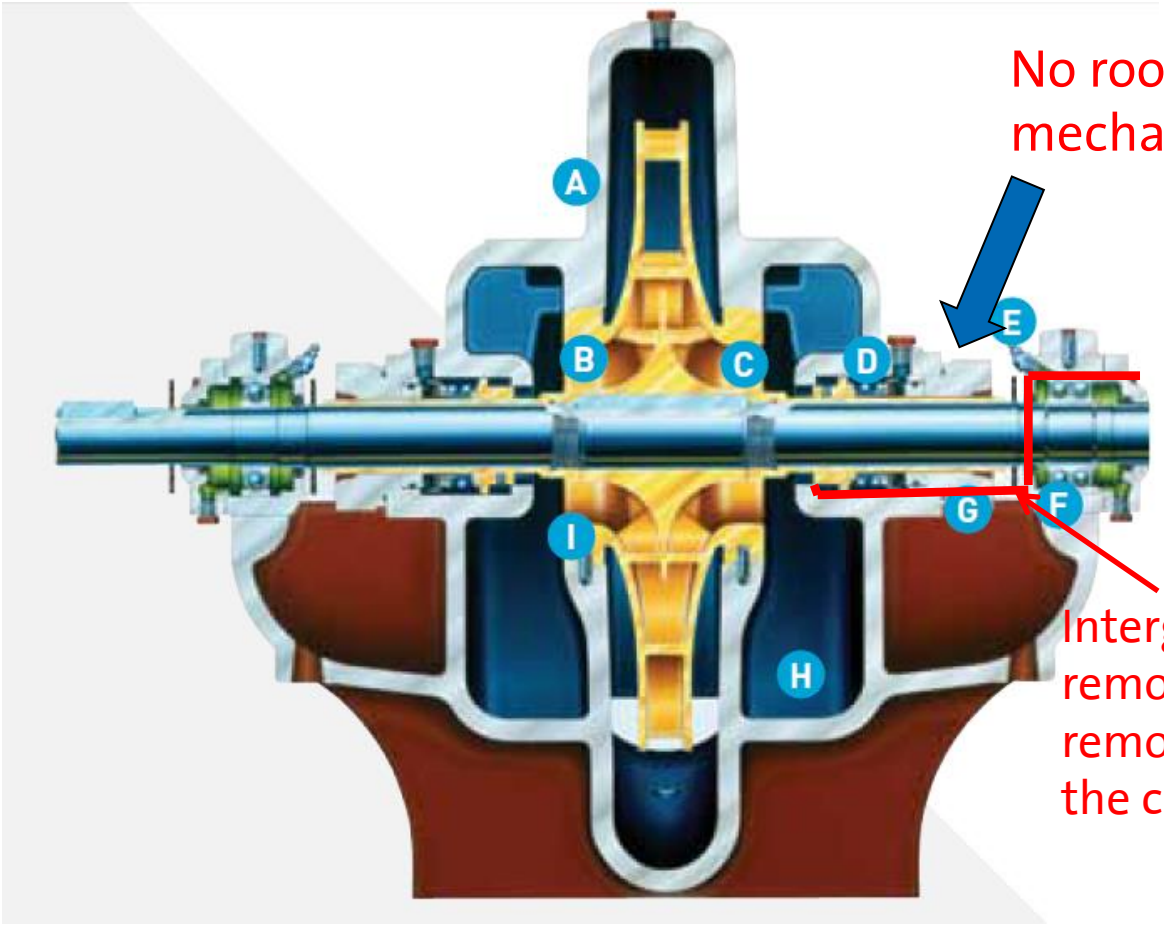

No room to remove mechanical seal

Intergrally cast. Cannot remove seal without removing the top halve of the casing

Questions?

Distribution Loop

Distributed Pumping Concept

Driving Technique

Conventional Primary Direct Pumping System

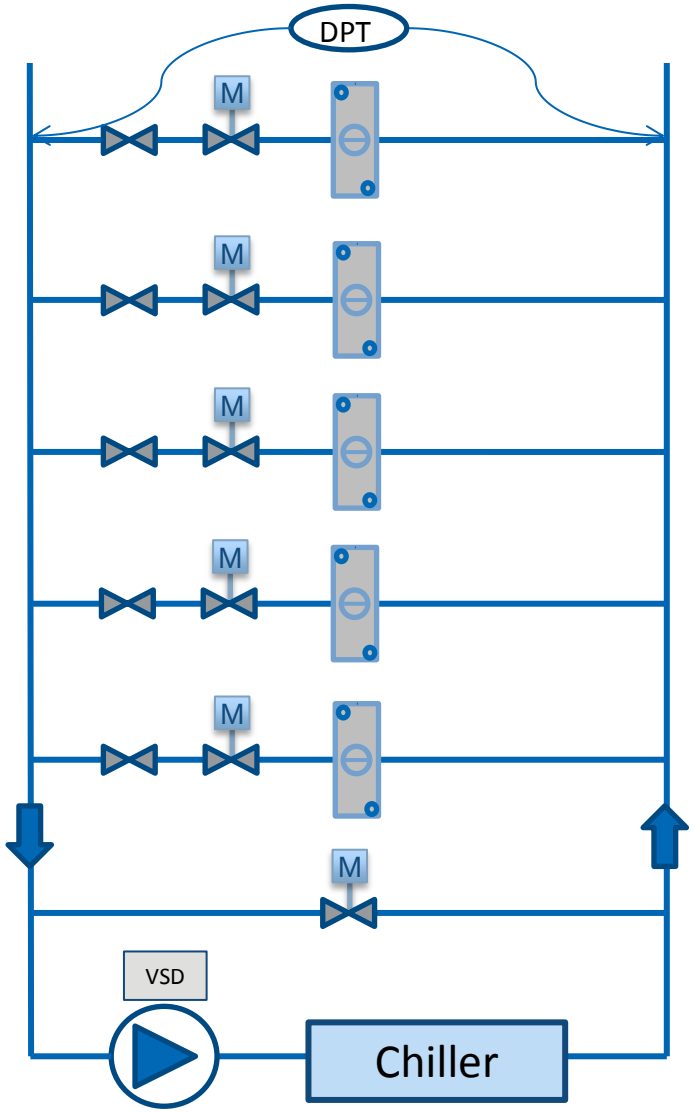

Variable Speed Primary Pump

Distributed Pumping Concept – A “No-Brake” Solution

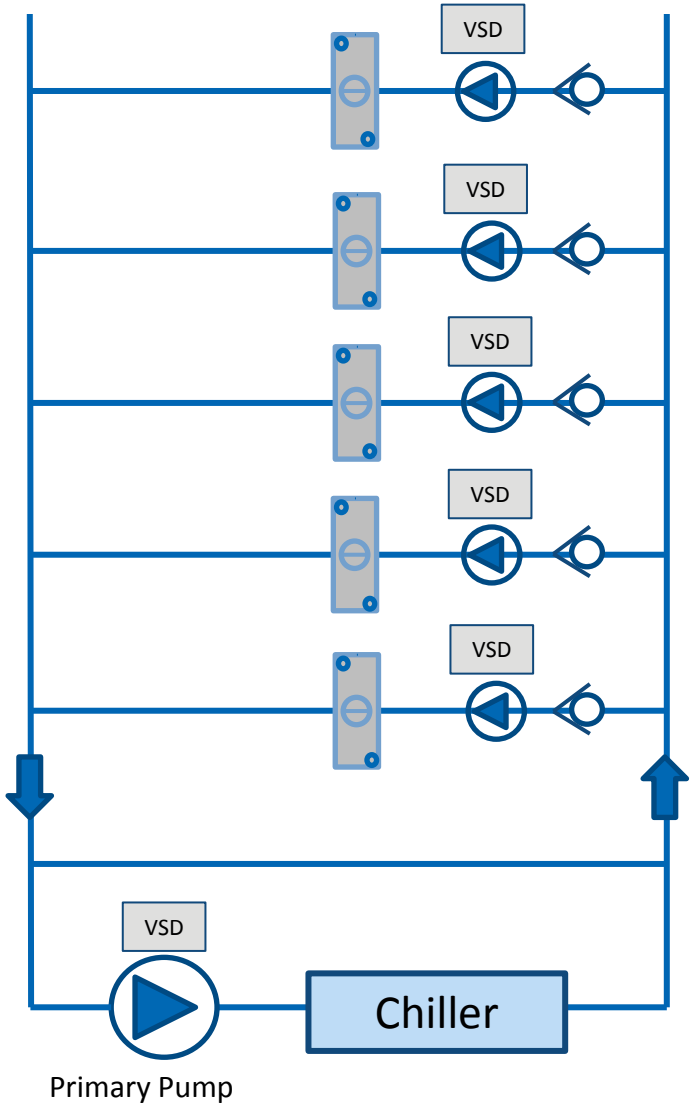

Comparing Energy Efficiency

Calculating Pump Power Consumption

$$P = \frac{Q \,.\, H \,.\, g \,.\, \rho}{3600 \,.\, \eta}$$

where P is the power input to shaft, watts
Q is the flow rate, m^3/h
H is the head, m
g is acceleration of gravity, m/s^2
ρ is density of water, kg/m^3
η is efficiency of the pump, %

Conventional Primary Direct Pumping System – Pumping Energy

Pump Power Calculated = 19.6kW

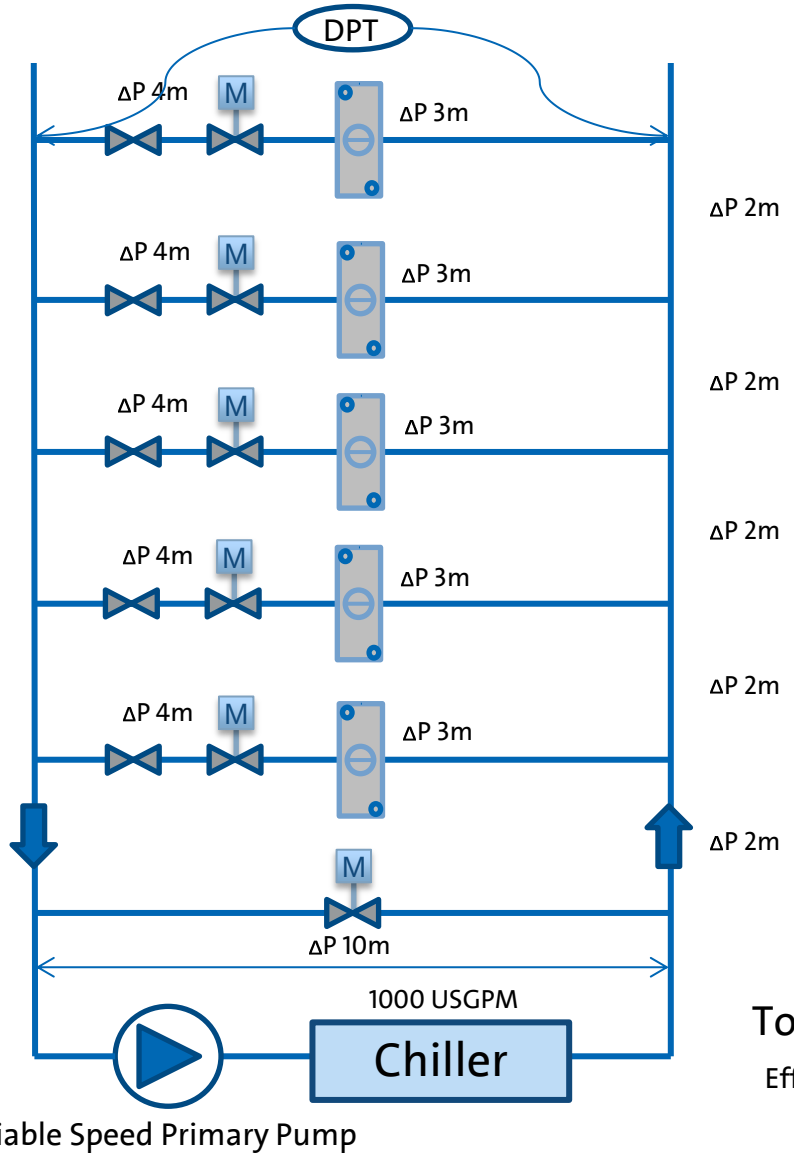

Variable Speed Primary Pump

Total Pump Head: 27m

Efficiency of Primary Pump : 85%

Distributed Pumping System – Pumping Energy

Total Pump Power Calculated = 15.2kW

Energy Savings of 22%
at design flow
48% Savings
at 50% flow

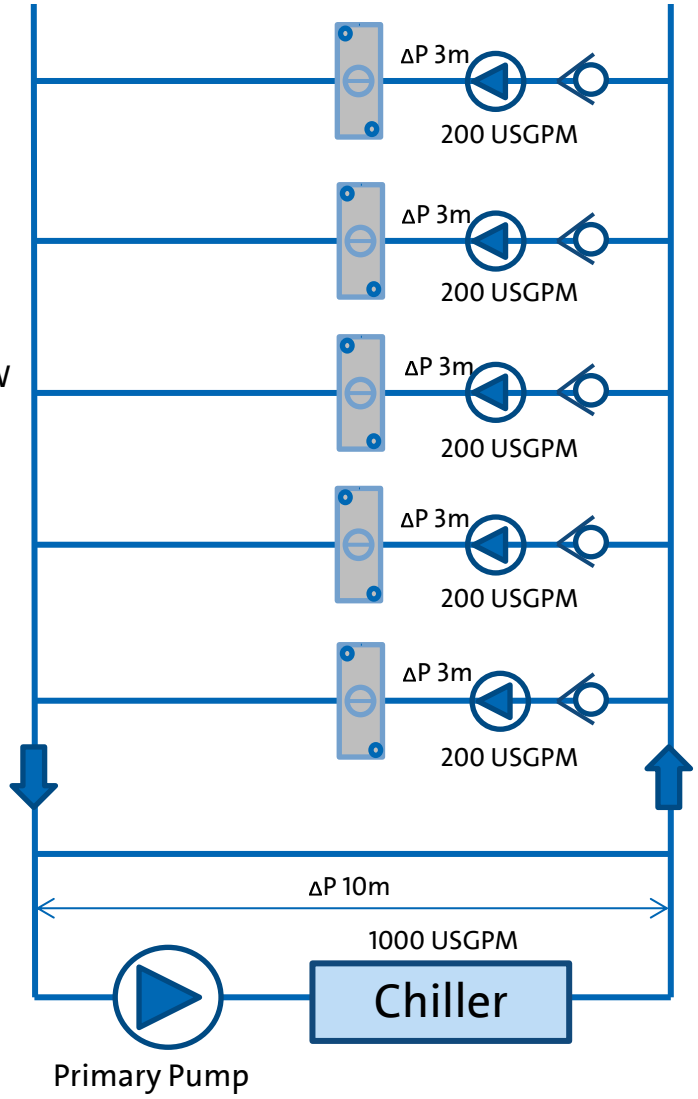

Efficiency of Distributed Pumps : 70%

Head for Pump 5-1: 13m

Pump Power Pump 5-1: 2.298 kW

Head for Pump 4-1: 11m

Pump Power Pump 4-1: 1.945 kW

Head for Pump 3-1: 9m

Pump Power Pump 3-1: 1.591 kW

Head for Pump 2-1: 7m

Pump Power Pump 2-1: 1.237 kW

Head for Pump 1-1: 5m

Pump Power Pump 1-1: 0.884 kW

Head For Primary Pump: 10m

Efficiency of Primary Pump : 85%

Pump Power Pump 1-1: 7.281 kW

Where Does The Energy Savings Come From?

1. Customized Pump Heads
2. Removal of friction loss from control and balancing valves

What are the possible downside?

1. Redundancy
2. Cost
3. Minimum Load

Control Logic For Conventional System

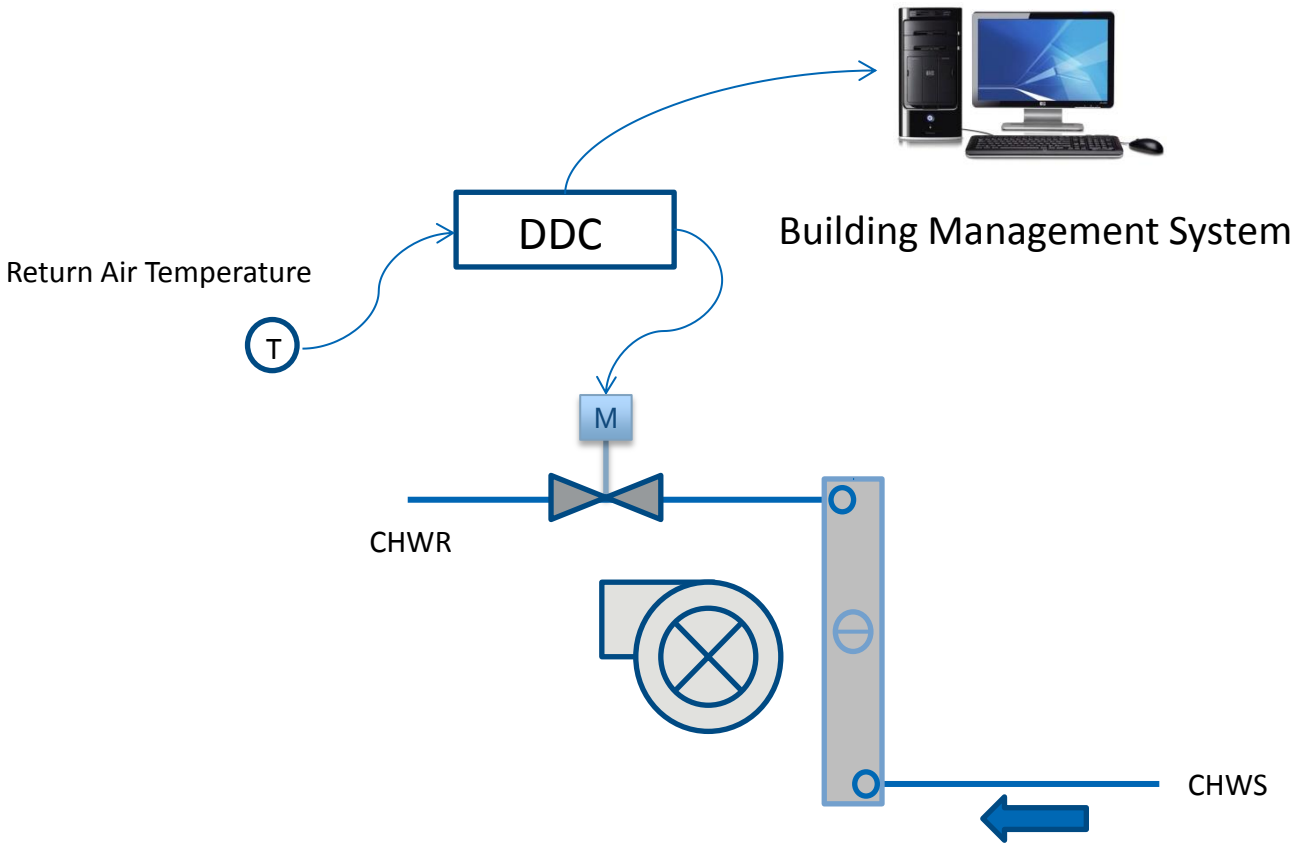

Control Logic For Distributed Pumping

- maintaining constant ΔT for a healthy system

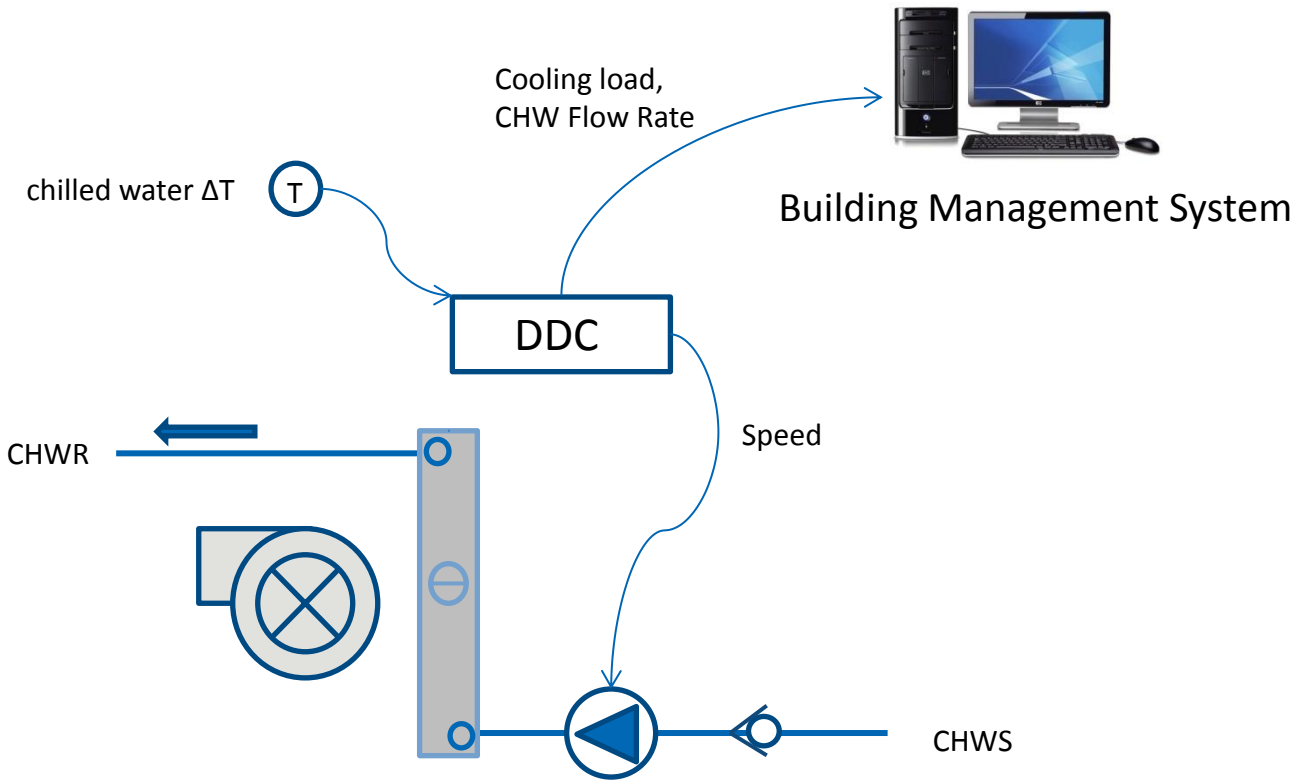

Eliminate low ΔT Syndrome!!!

Benefits to Customer



- Actual Energy Savings over conventional design
- Faster response of VSD pumps over modulating control valves
- 100% balanced hydronic system without the use of balancing and throttling valves
- Eliminates low ΔT Syndrome
- Save cost on modulating control valves, balancing valves or PICVs.
- Save cost on buying smaller Primary Pumps (and installation)
- Save cost on commissioning and balancing the system (many months of engineering labour)

Distributed Pumps



MAGNA3



TPE3

MAGNA3

PERFORMANCE RANGE

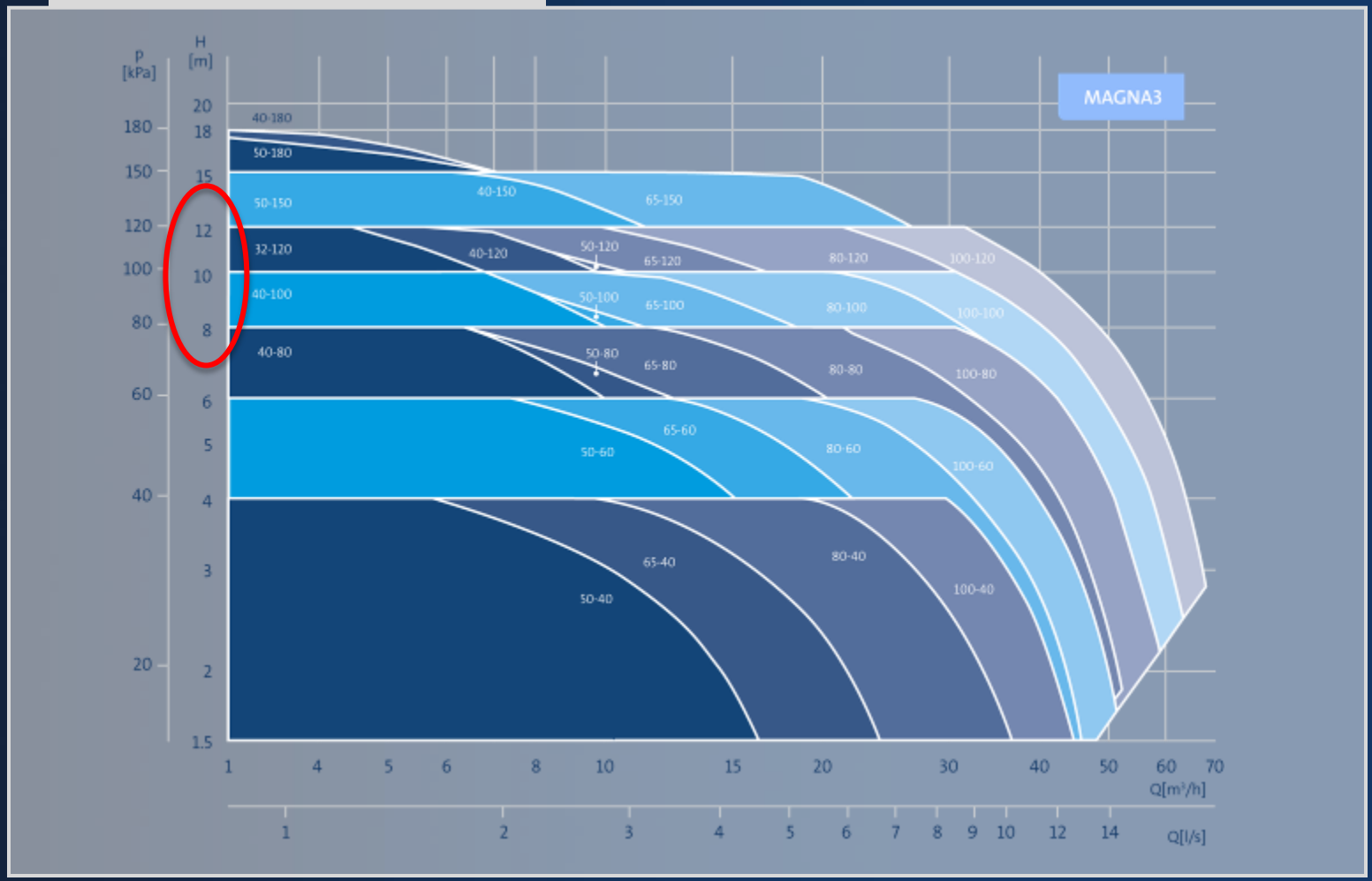

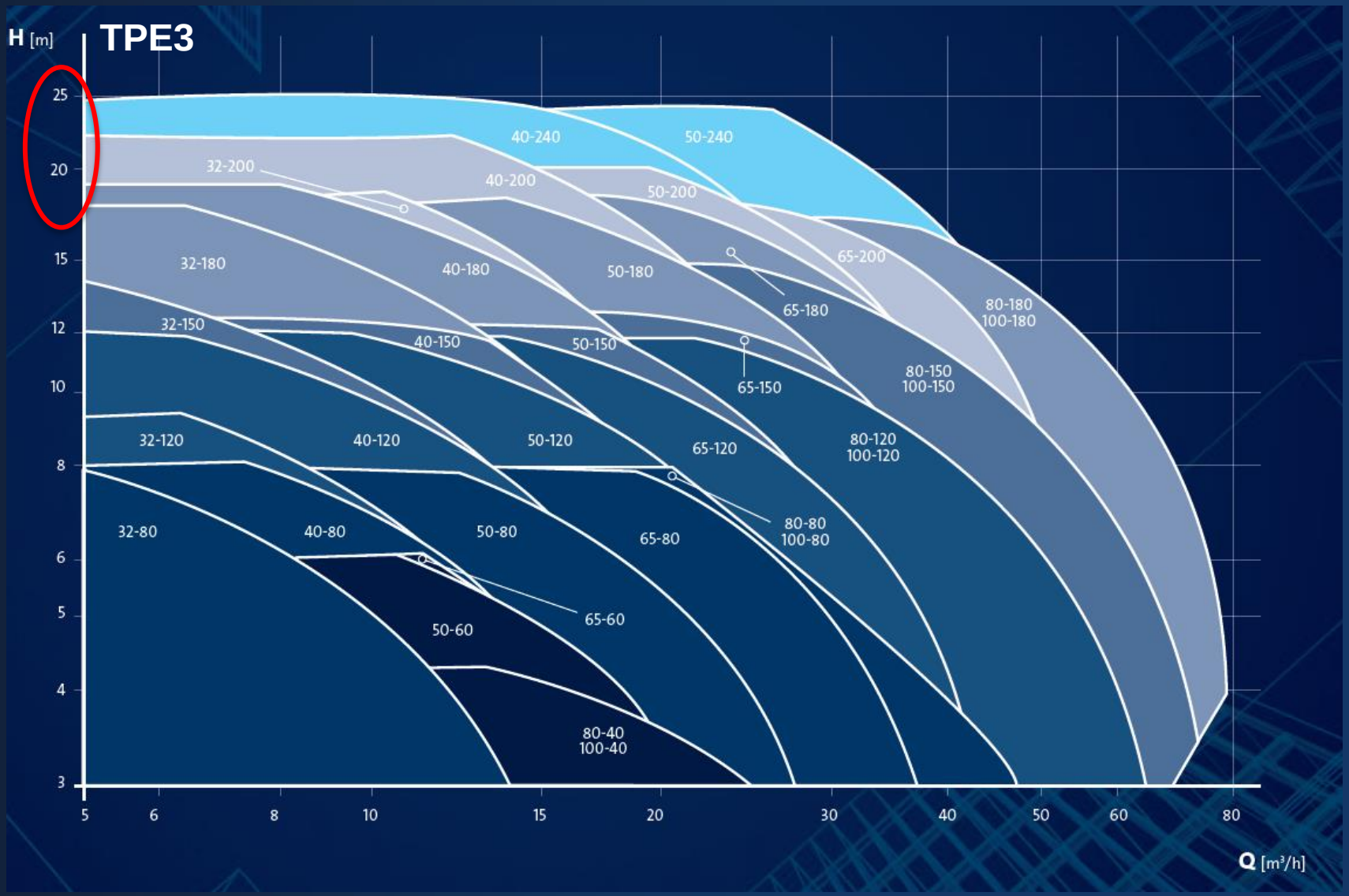
TPE3
H [m]
25
20
15
12
10
8
6
5
4
3
40-240
50-240
32-200
40-200
50-200
65-200
32-180
40-180
50-180
65-180
80-180
100-180
32-150
40-150
50-150
65-150
80-150
100-150
32-120
40-120
50-120
65-120
80-120
100-120
32-80
40-80
50-80
65-80
80-80
100-80
65-60
50-60
80-40
100-40
5
6
8
10
15
20
30
40
50
60
80
Q [m³/h]

The MAGNA3 is more than a pump

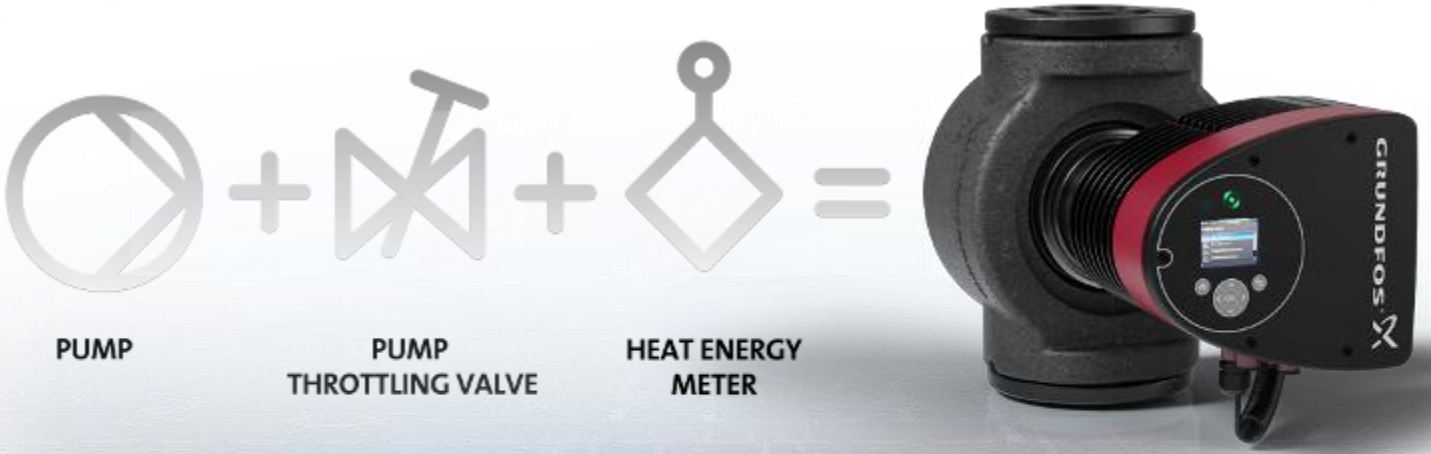

Key components that provide MAGNA3 energy efficiency

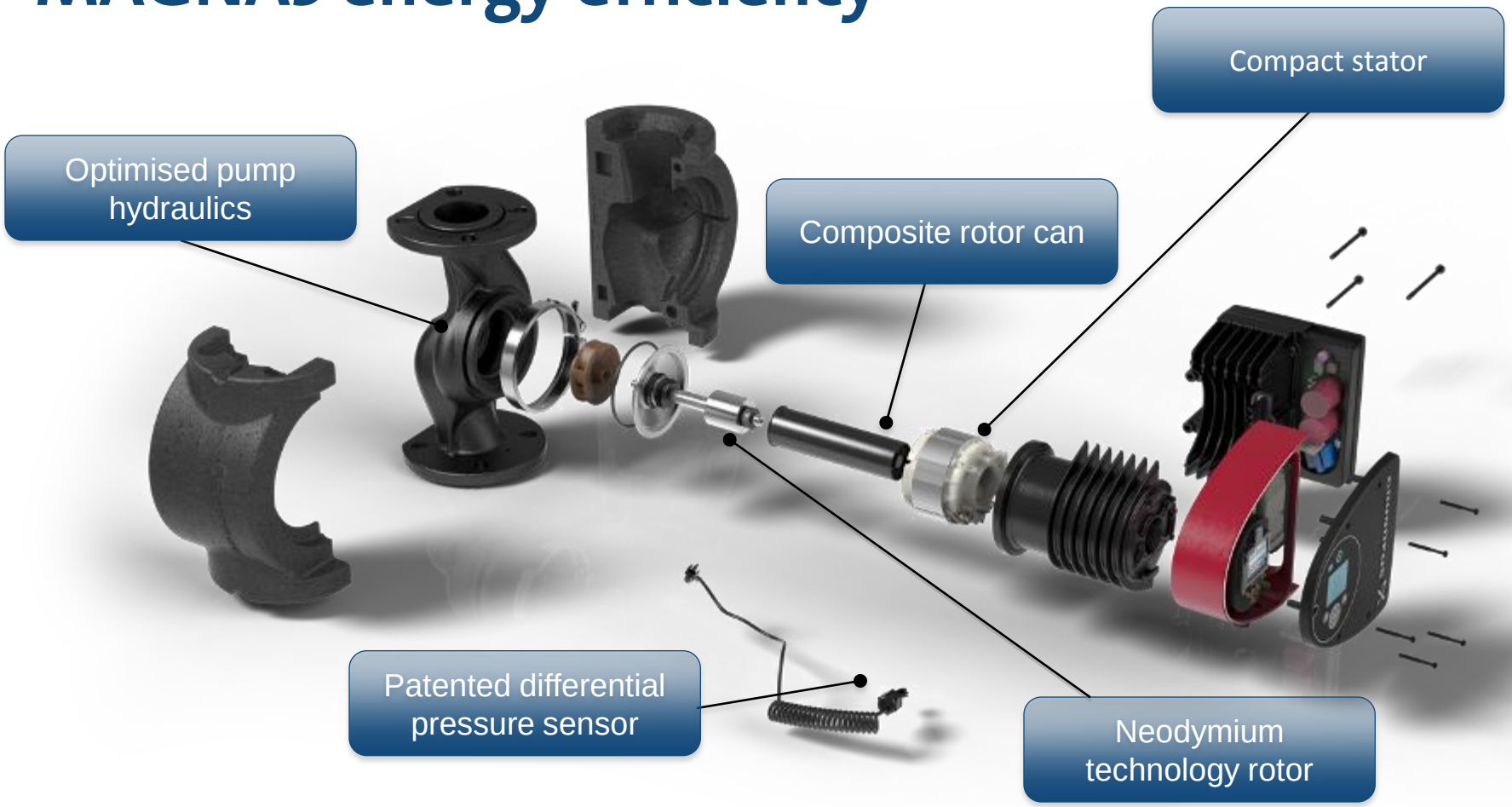

New generation inline Pumps TPE3

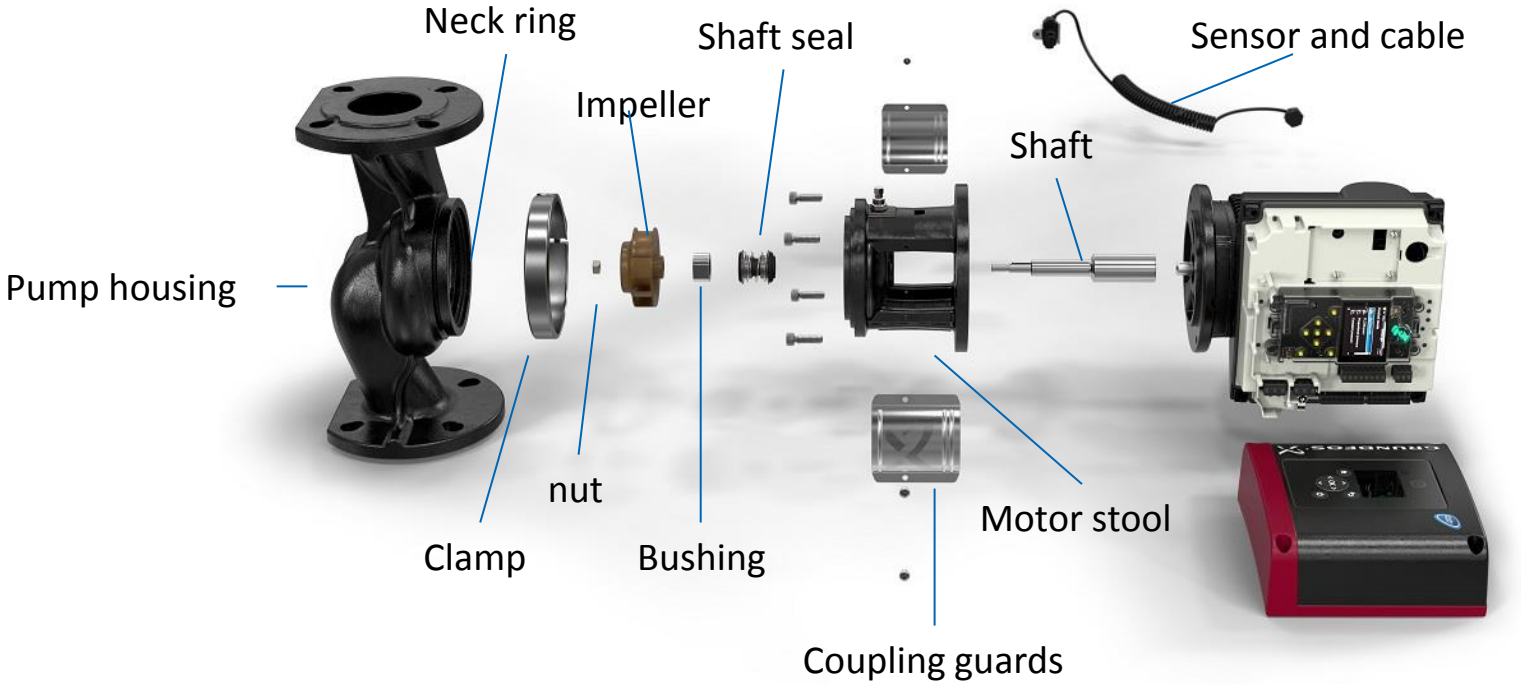

Wide temperature range

- Integrated Variable Speed Drive
- Liquid temperature: -10°C up to +110°C
- PN6, PN10 & PN16
- Easy to install (no support structures)
- Single phase power supply (230V)



Low Energy Consumption in the MAGNA3



- Cooling Capacity 38TR
- CHW Flow Rate 20 CMH
- Coil Pressure Drop 4m

- **Magna3 65-60**
- Power Consumption 275W at design flow
- If average flow 12 ~ 16 CMH, input power < 100W



MAGNA3 65-60 F (N)

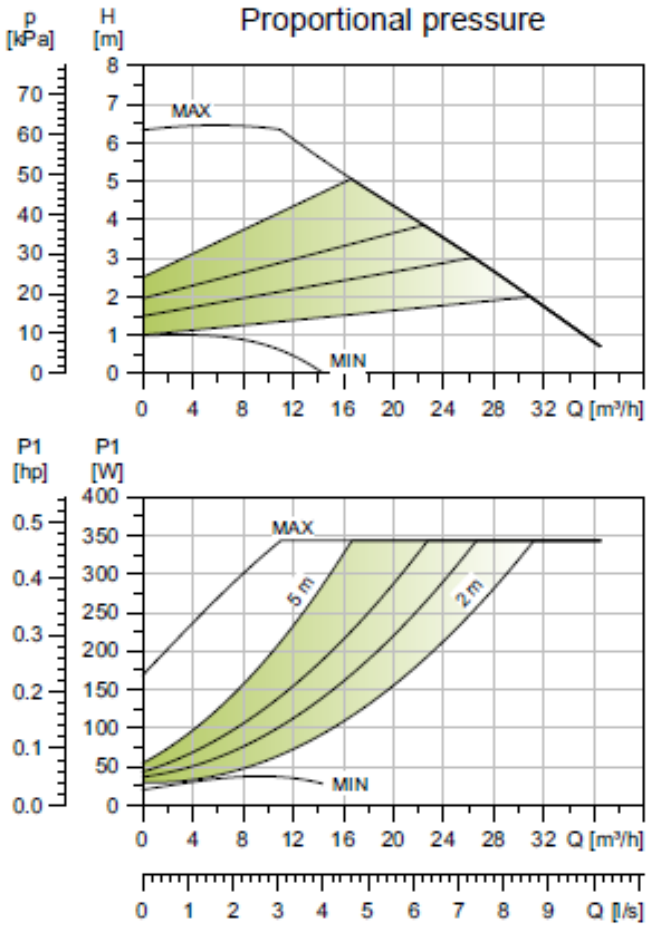

Intelligence in the MAGNA3







BMS Integration

The MAGNA3 can be seamlessly integrated to any BMS System in your facility today.

LonWorks

ASHRAE BACnet™

Modbus

GSM



BMS Integration

Honeywell

Johnson Controls

SIEMENS

Schneider Electric

AUTOMATEDLOGIC

Rockwell Automation

Allen-Bradley



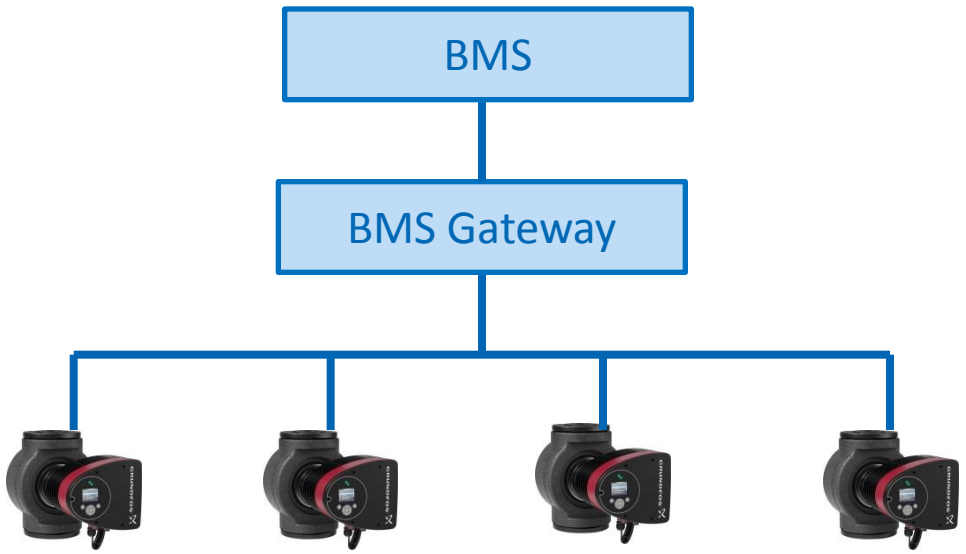

Heat Energy Meter

INTELLIGENCE IN THE MAGNA3

- The Magna3 has an integrated BTU meter that measures heat energy consumption without the use of additional instruments.



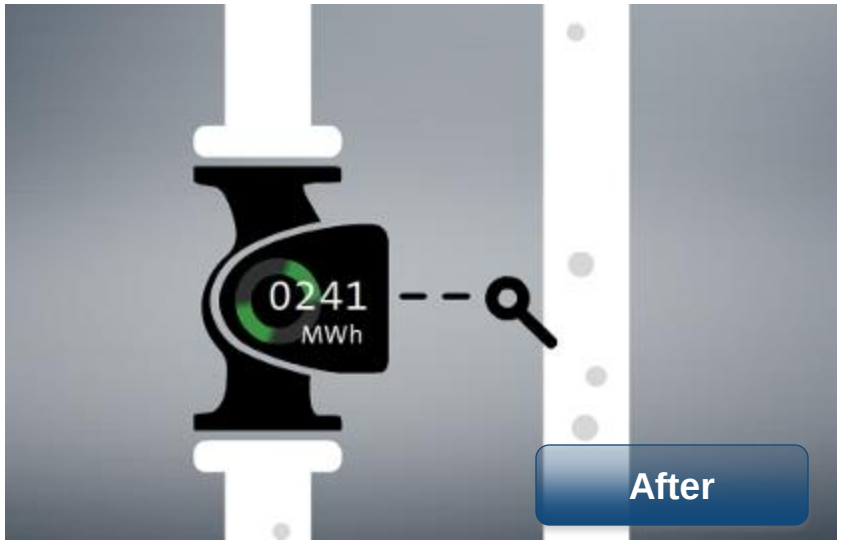

Flow Measurement

INTELLIGENCE IN THE MAGNA3

- The Magna3 has a flow measurement accuracy of 1% at design flow (blue region).

Magna3 40-100

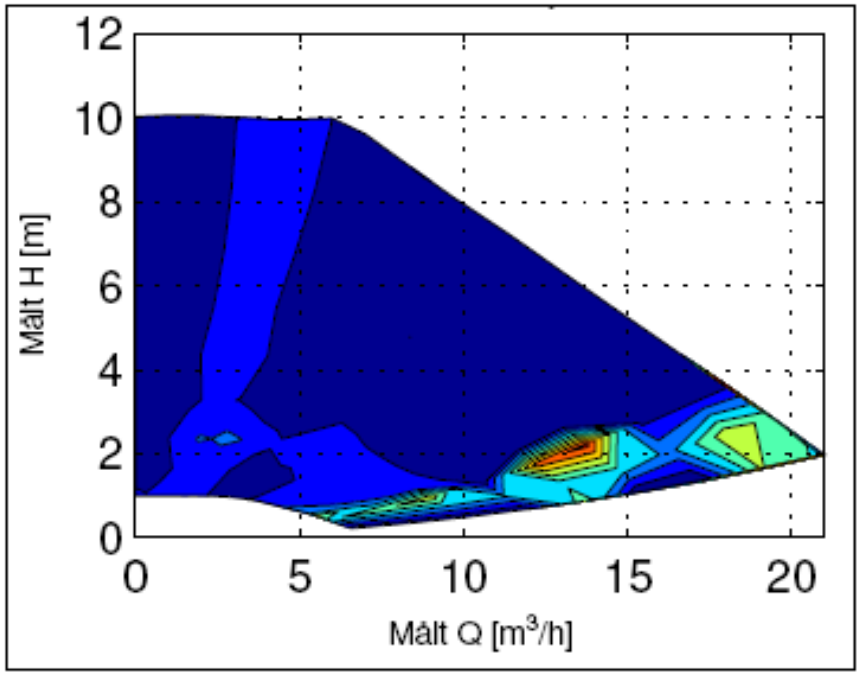

Flow Measurement

INTELLIGENCE IN THE MAGNA3

	Electromagnetic Flowmeter	Dynamic Balancing Valve	Magna3
Mechanics	Determine the fluid velocity by induced voltage	Determine flow rate by calibrated opening (orifices)	Determine flow rate by pressure & pump speed
Accuracy	Highly dependant on compliance to installation requirements.	Independent of installation	1% at design flow
	Typical catalog quote accuracy 0.5% of operating range (9 to 10 m/s)	2% of valve maximum flow rate at 2 m/s	
	Accuracy @ pipe actual flow rate 2 m/s : 1.8 to 2.25%		
Installation Requirements	Min 5D upstream & 3D downstream to ensure any accuracy	No specific requirements	None
Differential Pressure Required	No Requirements	Up to 80 kPa for valve max flow rate of 2 m/s	None

FLOW*LIMIT*

INTELLIGENCE IN THE MAGNA3

- FLOW*LIMIT* control function makes it possible to set a maximum flow limit for the pump

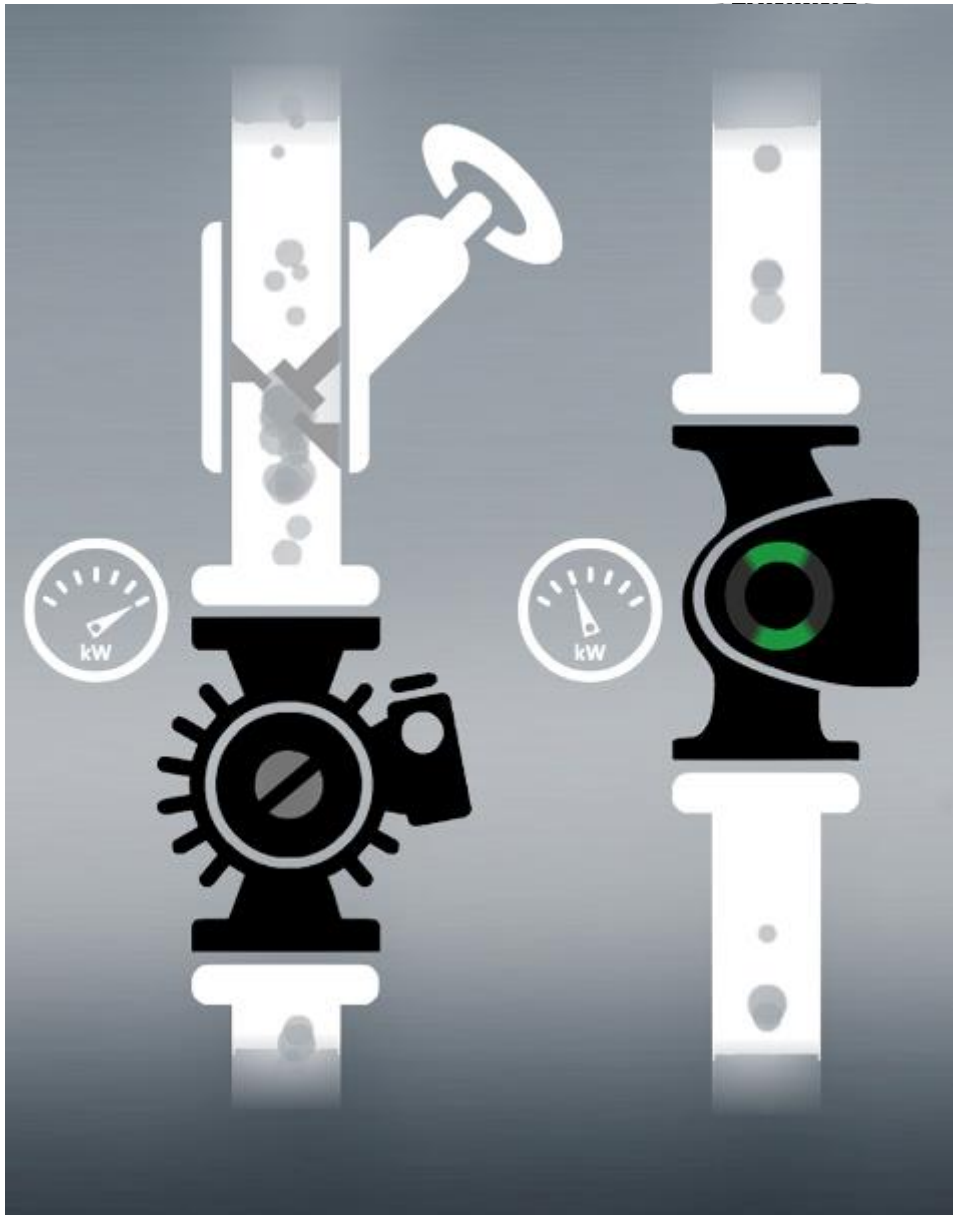

Input/output

INTELLIGENCE IN THE MAGNA3

- The Magna3 has integrated in- and outputs points for sensors and communication to BMS.
- The no. of I/O points are:

1 x analogue input (0-10V/4-20 mA)

2 x relay outputs

3 x digital inputs

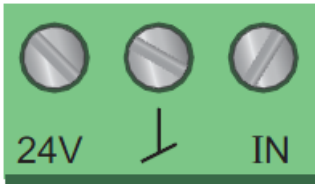

Analog input

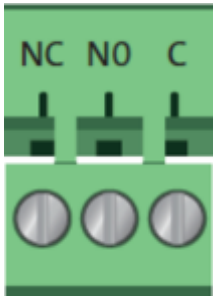

Relay output

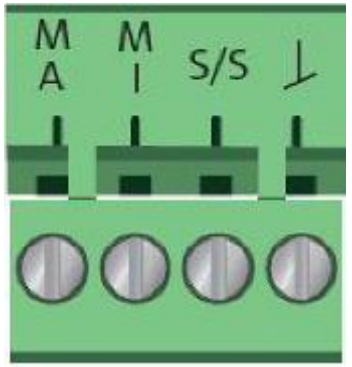

Digital input

Optimization

INTELLIGENCE IN THE MAGNA3

- Every duty point and the operational conditions are tracked and stored in the pump
- The 3D work log and duty over time curve provide instant overviews of historical pump performance and operational conditions
- The perfect tools for pump optimization, replacement and troubleshooting.

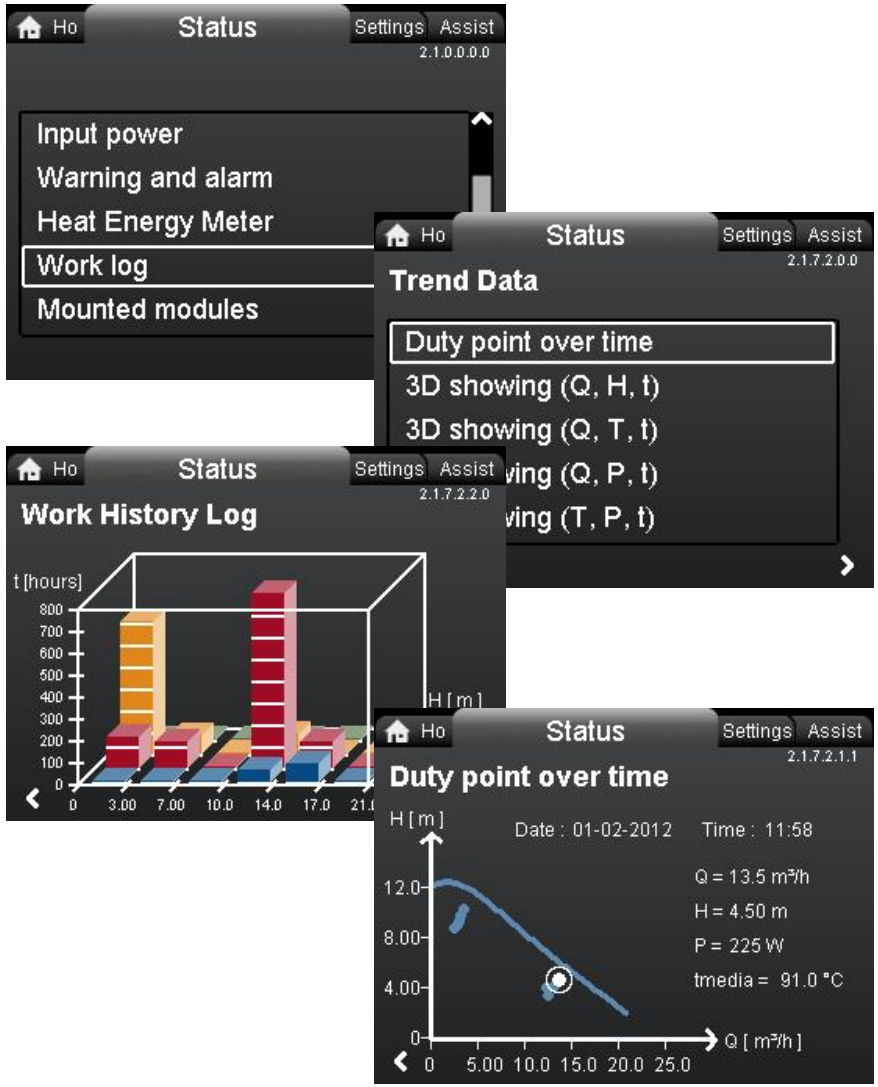

GRUNDFOS GO

INTELLIGENCE IN THE MAGNA3

Communication

- Save time with the intuitive handheld pump control
- Save and share reports easy and electronically
- Access to online replacement and sizing tools
- Everything you need – on the GO



Easy commissioning

- Grundfos Eye
- Intuitive TFT (Thin Film Transistor) interface for control and status of the pump
- Selection buttons with tactile feedback
- Easy to home screen through the home button
- Back button for historic view



Warning/Alarm log

- Warnings and alarms will pop up at the display. Grundfos Eye show warning or alarm
- Actual warning or alarm in status menu
- 5 warning and 5 alarm in log
- Descriptive fault messages



Two-pump wireless connection

- Integrated wireless technology enables interaction between two MAGNA3 pumps
- Connection to a parallel coupled pump is quickly and easily obtained with the built-in wizard or Grundfos GO
- Two parallel coupled pumps can be controlled jointly in cascade mode, alternating mode or pump back-up mode

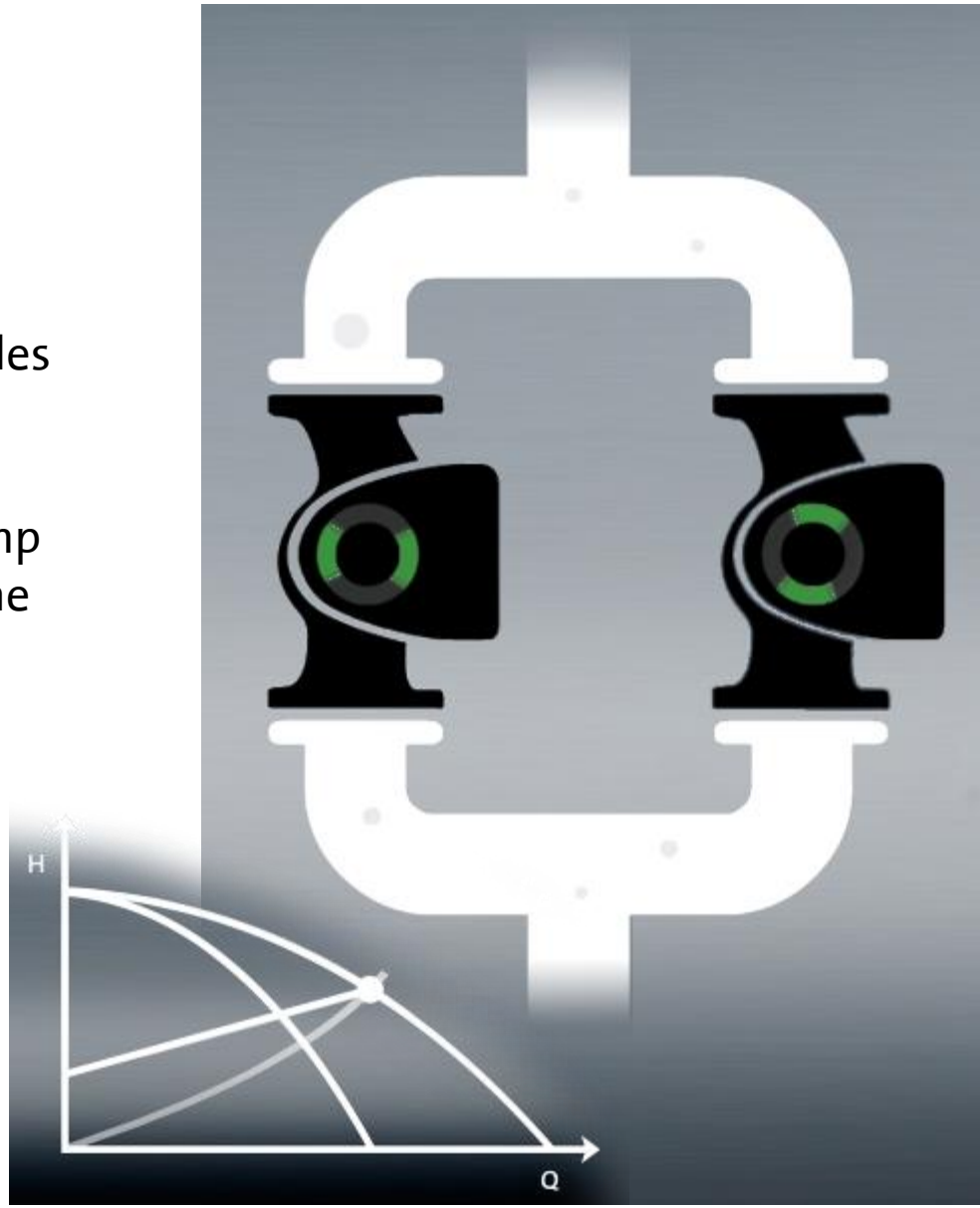

How your future AHU room may look like…



Primary Direct Pumping System

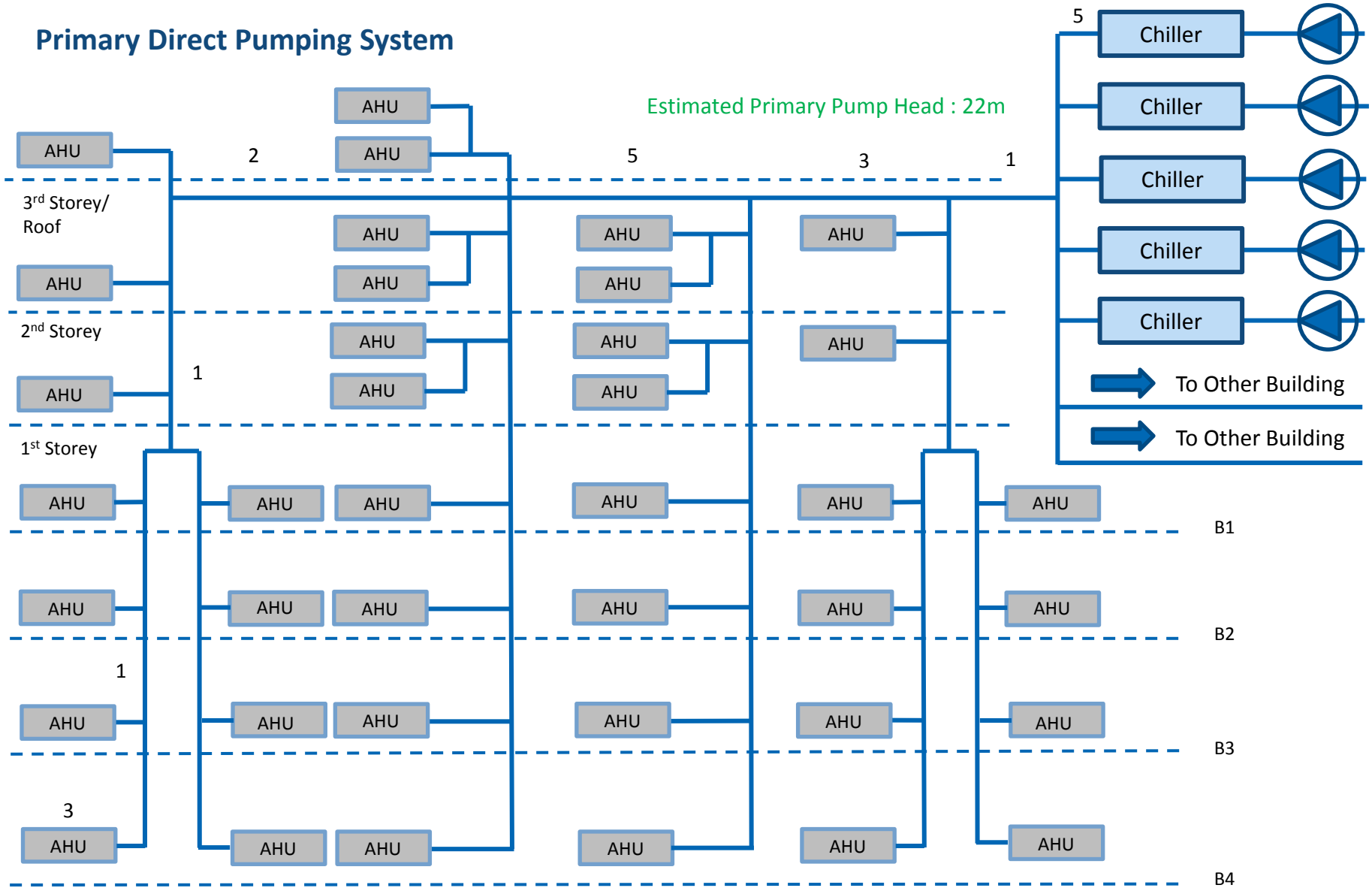

Grundfos Solution

Full Redundancy



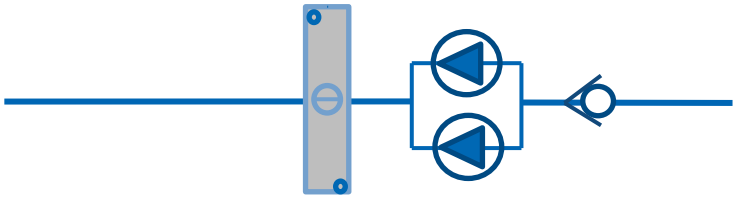



Cost

Base on present design, there are a total of 39 units AHU.

Estimated Cost of 39 units distributed pumps with full redundancy	$ 105,000.00
Estimated Cost of 39 units AHU control valves + balancing valves + electromagnetic flow meter + btu calculator	$ 135,000.00

Immediate savings in upfront project cost!

**Assumption based on Siemens Acvatix SKB/VVF control valves, TA STAD 40mm balancing valves, Siemens MAGFLO 5000 transmitter, MAGFLO 5100w flow sensor and Siemens SITRANS FUE950 energy calculator.*

Are there any energy savings?

Conventional Primary Direct Pumping System

	Flow Rate, cmh	head, m	Eff %	Pump Power, W	Total Pump Power, W
Conventional Pri Dir System	284.97	22	0.85	20098.8	40197.5

2 units 22kW Pumps

Are there any energy savings?

Distributed Pumping System

Riser 1 AHU (Nearest to Chiller Plant)

Building Level	Qty	TR of AHU	CHW Flow Rate (cmh)	Head (m)	Pump Eff (%)	Each Pump Power Consumption (kW)	Total Pump Power Consumption (kW)
L3	0			0			
L2	1	28	14.5	5	70%	282.4	282.4
L1	1	28	14.5	5	70%	282.4	282.4
B1	2	28	14.5	6	70%	338.9	677.7
B2	2	28	14.5	6	70%	338.9	677.7
B3	2	28	14.5	6	70%	338.9	677.7
B4	2	28	14.5	6	70%	338.9	677.7
							3275.6

Riser 2 AHU

Building Level	Qty	TR of AHU	CHW Flow Rate (cmh)	Head (m)	Pump Eff (%)	Each Pump Power Consumption (kW)	Total Pump Power Consumption (kW)
L3	0			0			
L2	2	28	14.5	8	70%	451.8	903.6
L1	2	28	14.5	8	70%	451.8	903.6
B1	1	28	14.5	8	70%	451.8	451.8
B2	1	28	14.5	9	70%	508.3	508.3
B3	1	28	14.5	9	70%	508.3	508.3
B4	1	28	14.5	9	70%	508.3	508.3
							3783.9

Riser 3 AHU

Building Level	Qty	TR of AHU	CHW Flow Rate (cmh)	Head (m)	Pump Eff (%)	Each Pump Power Consumption (kW)	Total Pump Power Consumption (kW)
L3	2	28	14.5	13	70%	734.2	1468.4
L2	2	28	14.5	13	70%	734.2	1468.4
L1	2	28	14.5	13	70%	734.2	1468.4
B1	1	28	14.5	14	70%	790.7	790.7
B2	1	28	14.5	14	70%	790.7	790.7
B3	1	28	14.5	14	70%	790.7	790.7
B4	1	28	14.5	14	70%	790.7	790.7
							7567.8

Riser 4 AHU (Furthest from Chiller Plant)

Building Level	Qty	TR of AHU	CHW Flow Rate (cmh)	Head (m)	Pump Eff (%)	Each Pump Power Consumption (kW)	Total Pump Power Consumption (kW)
L3	1	28	14.5	15	70%	847.1	847.1
L2	1	28	14.5	15	70%	847.1	847.1
L1	1	28	14.5	15	70%	847.1	847.1
B1	2	28	14.5	16	70%	903.6	1807.2
B2	2	28	14.5	16	70%	903.6	1807.2
B3	2	28	14.5	16	70%	903.6	1807.2
B4	2	28	14.5	16	70%	903.6	1807.2
							9770.4

	Flow Rate, cmh	head, m	Eff %	Pump Power, W	Total Pump Power, W
Distributed System Pri Pumps	284.97	5	0.85	4567.9	9135.8

2 units 5.5 kW Pumps

Total Pumping Power = 33.6 kW (6.5kW or 17% energy saving)

In monetary terms, 6.5kW x 0.25 cents per kWh x 12hrs x 261 days = **$5,089.50 per annum**.

Other cost savings?

1. Buying & installing 5.5kW Primary Pumps vs 22kW Primary Pumps
2. Reduction in engineering man-hours for balancing and commissioning
3. Instantaneous reactions to changing conditions
4. Eliminate low ΔT syndrome
5. Simplify the BMS control system
6. Shutting down the chiller system 2 hours earlier than planned

Questions?

