CHILLERS

Steven Kang
Steven.kang@mnv.com.sg

Chiller Technologies

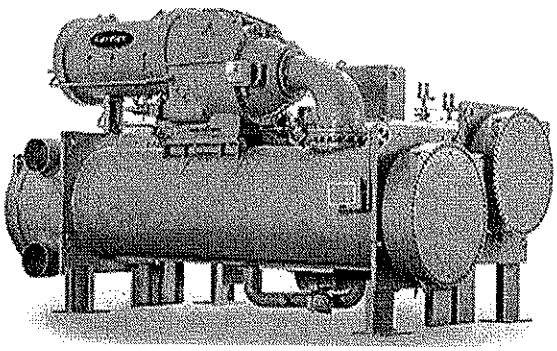

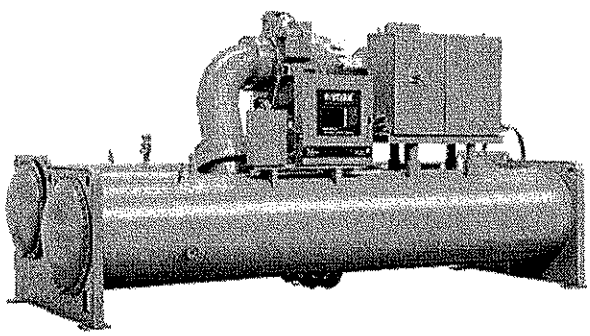

Agenda

1. Overview of chillers
2. Compressors
3. Chiller Performance Range
4. Chiller Part Load Performance
5. Refrigerants

Overview of chillers

Water cooled chiller

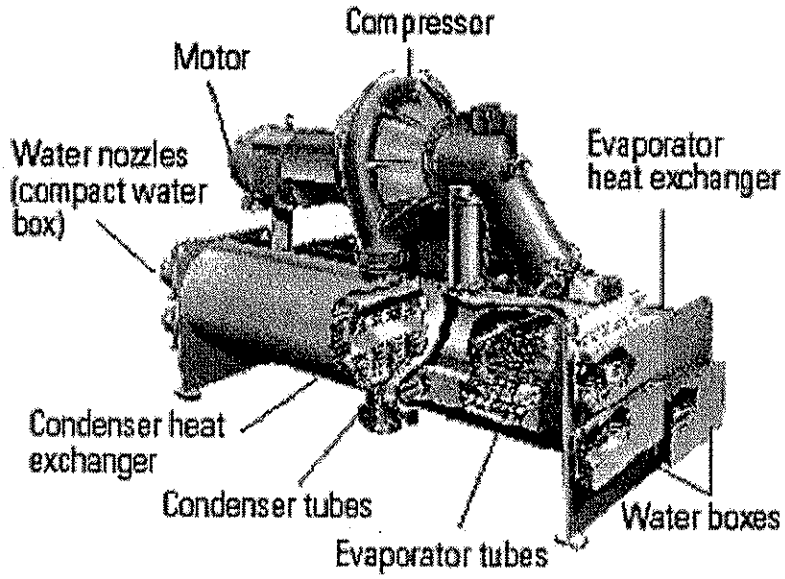

Air cooled chiller

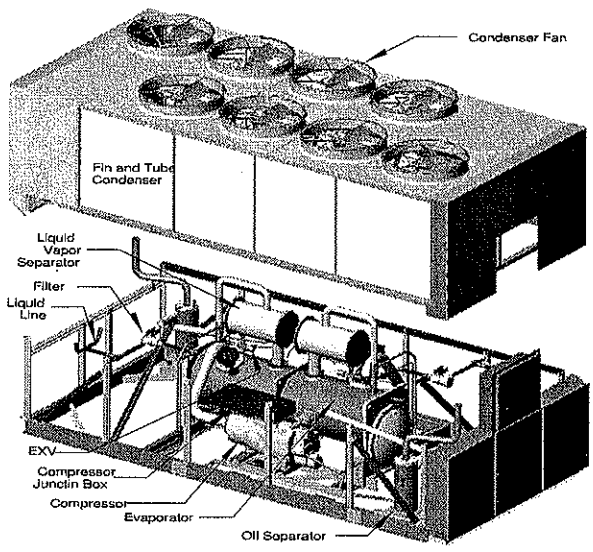

Proprietary Information of Measurement & Verification Pte Ltd

Absorption chiller

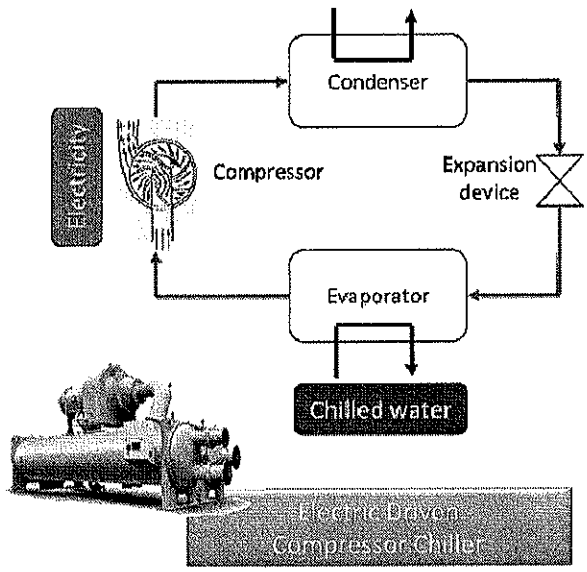

Electric Driven Compressor Chiller

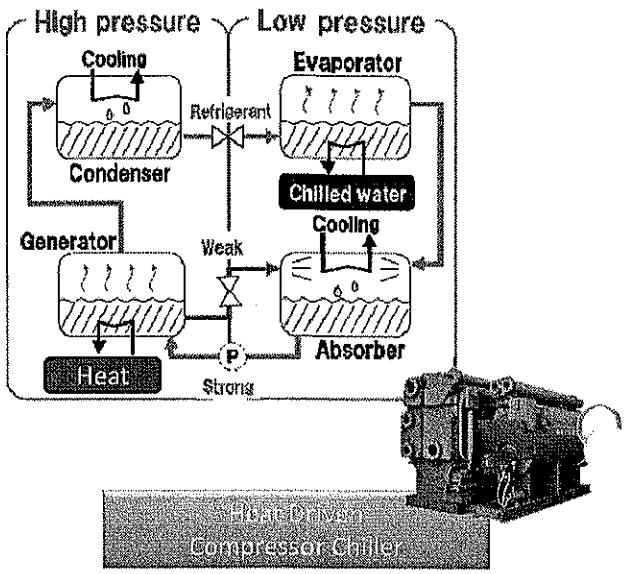

Heat Driven Compressor Chiller

Absorption chiller

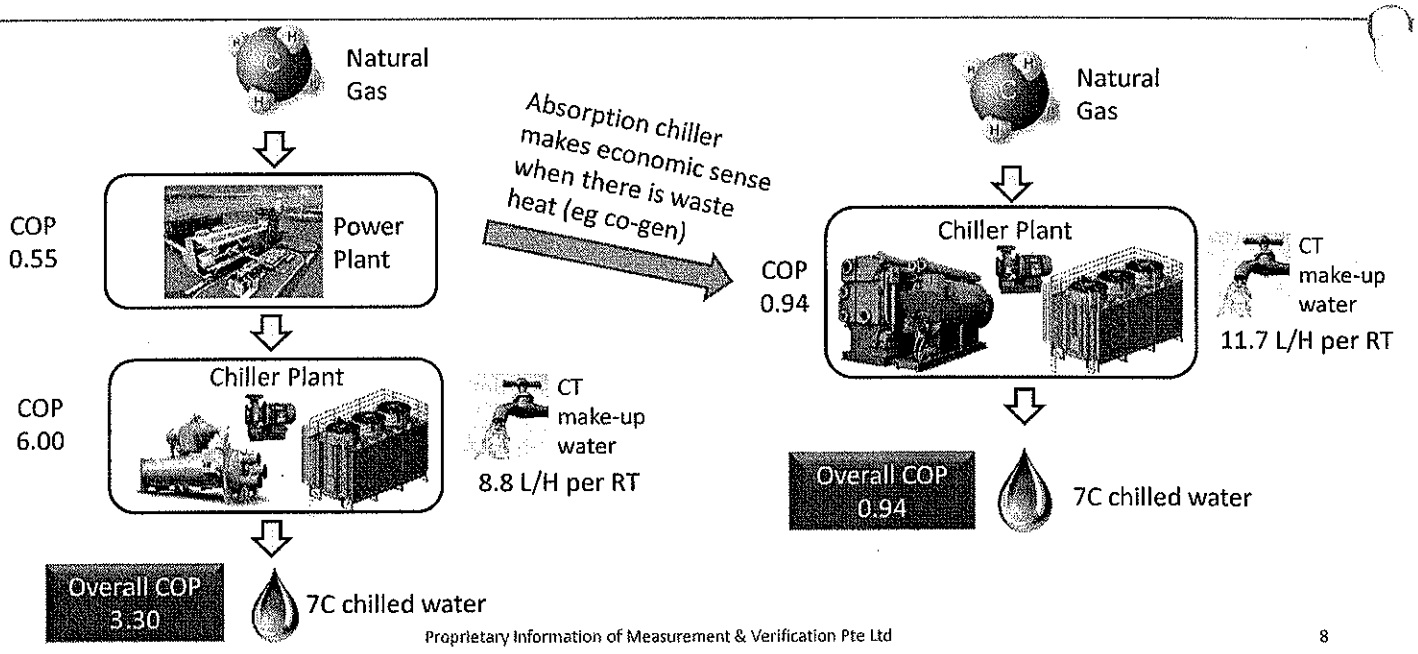

COMPRESSORS

Compressor Types

Reciprocating

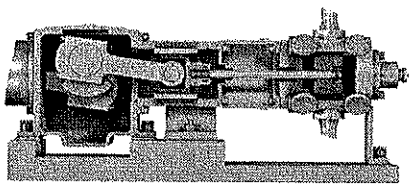

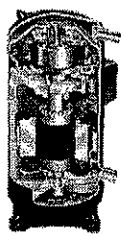

Scroll

Helical-rotary

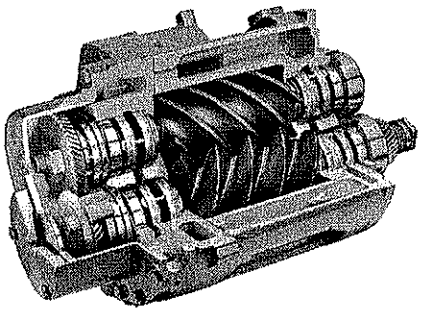

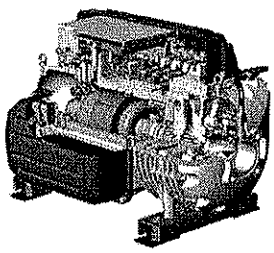

Centrifugal

© American Standard Inc. 2008

Reciprocating Compressor

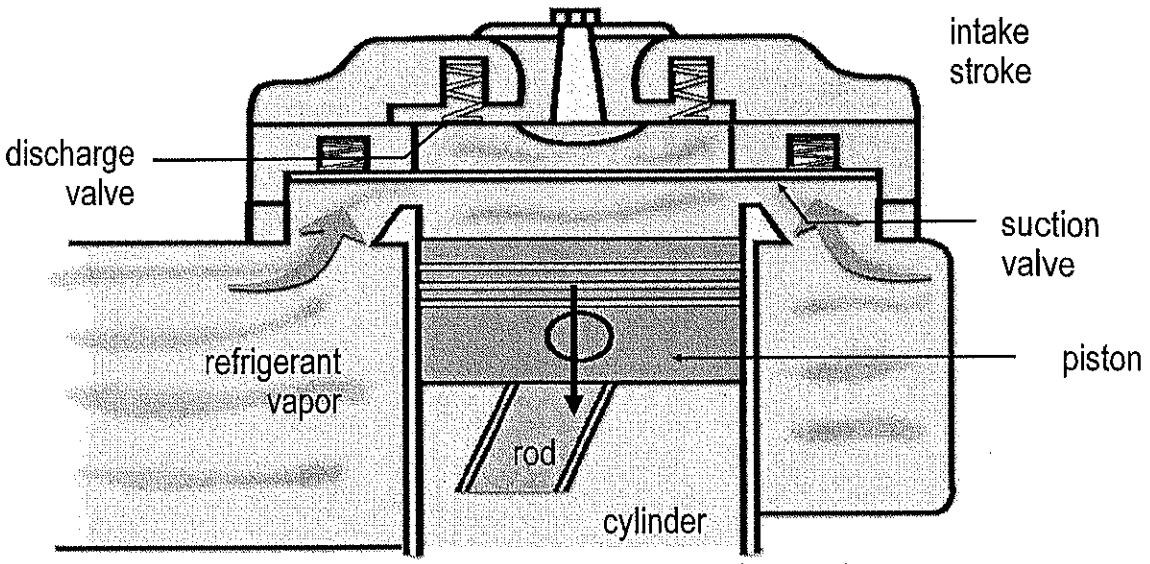

needs high tolerance machining due to tight tolerances.

Scroll Compressor

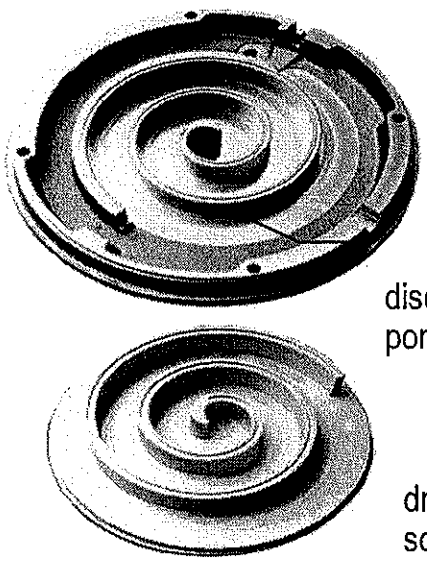

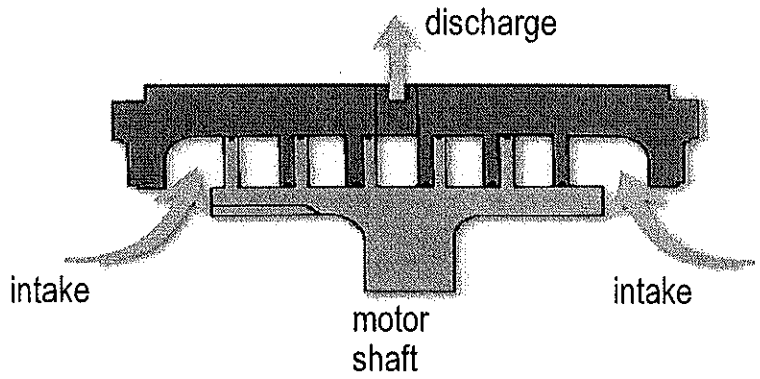

Scroll Compressor

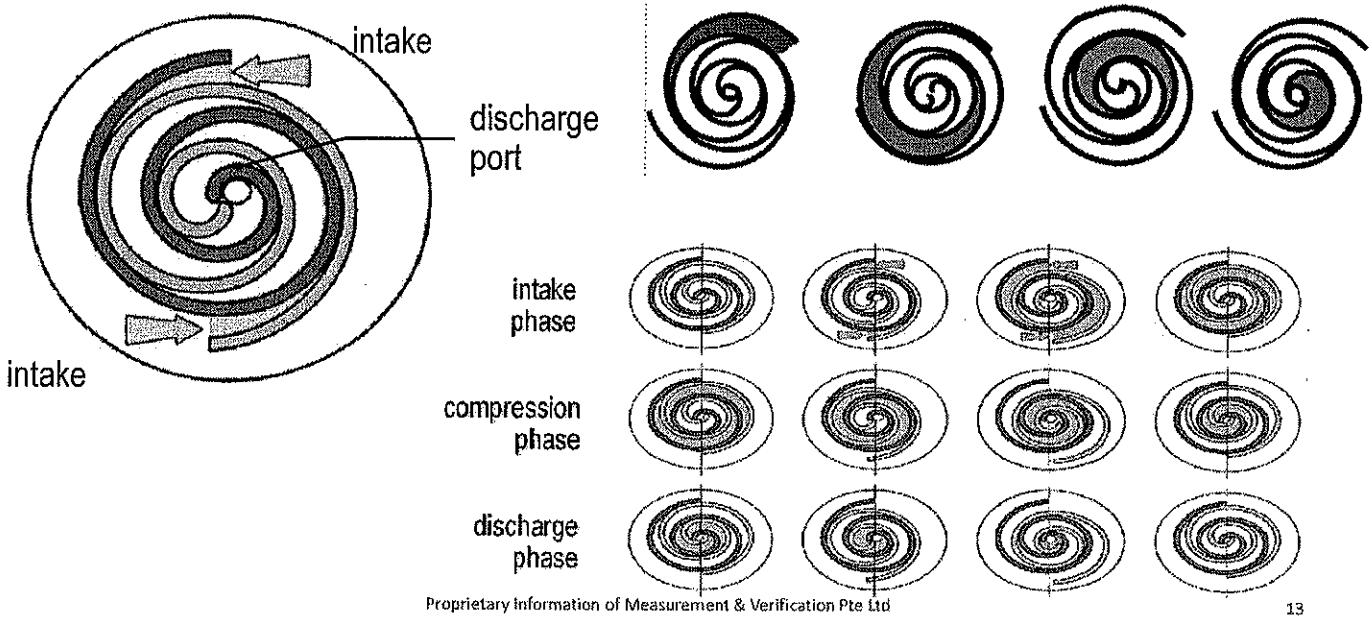

Helical-Rotary Compressor

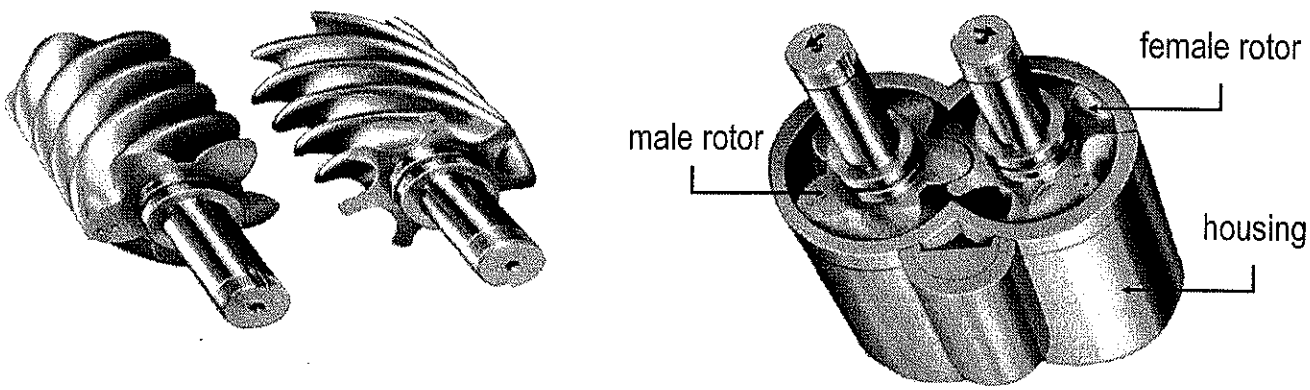

Helical-Rotary Compressor

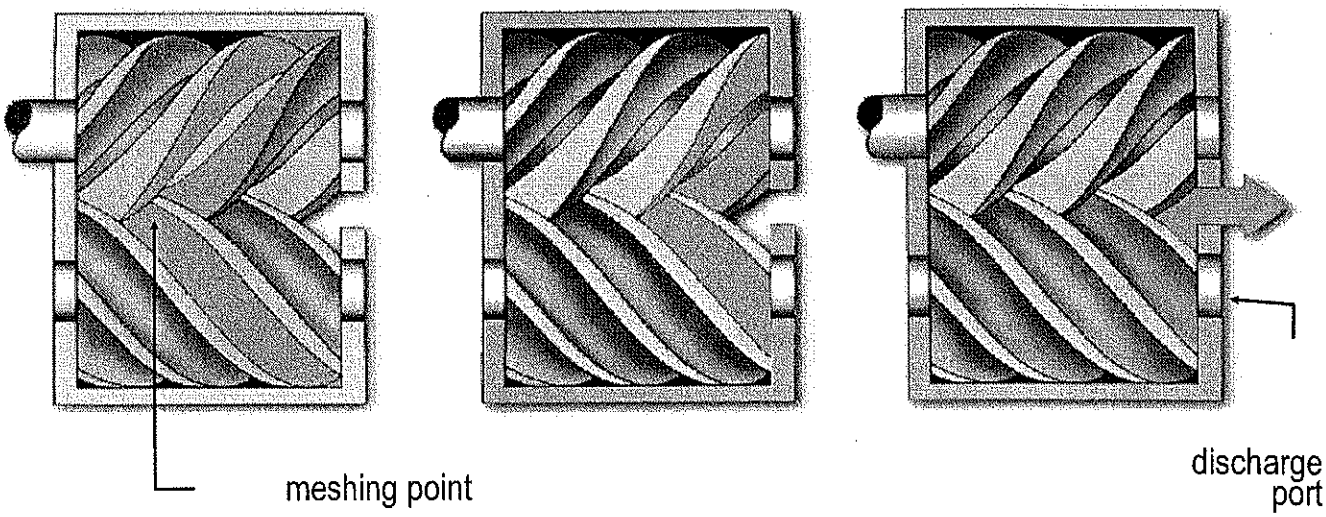

Centrifugal Compressor

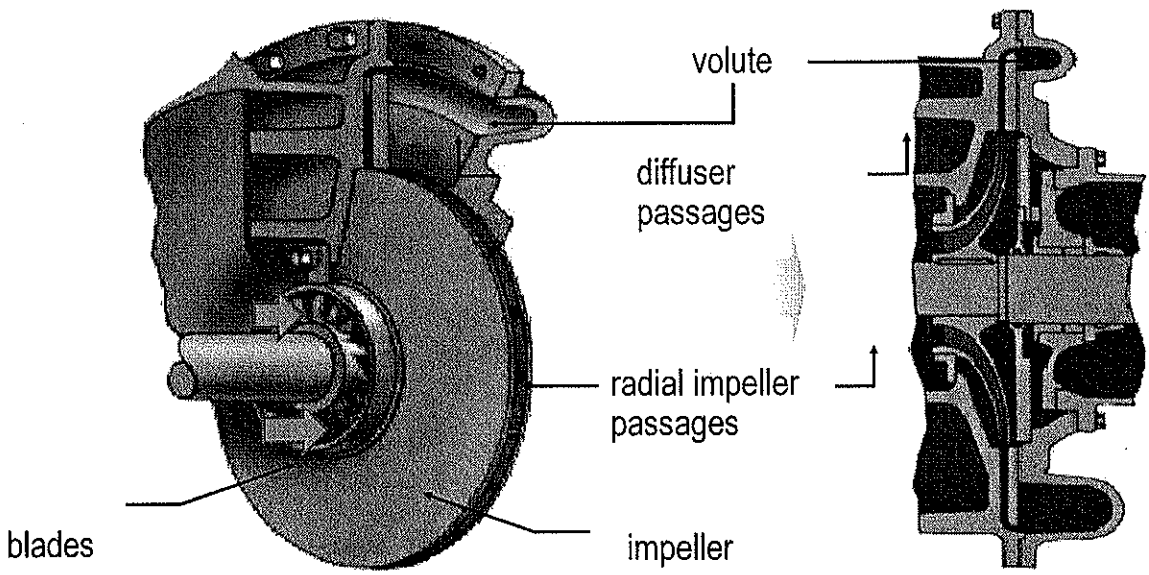

Centrifugal Compressor

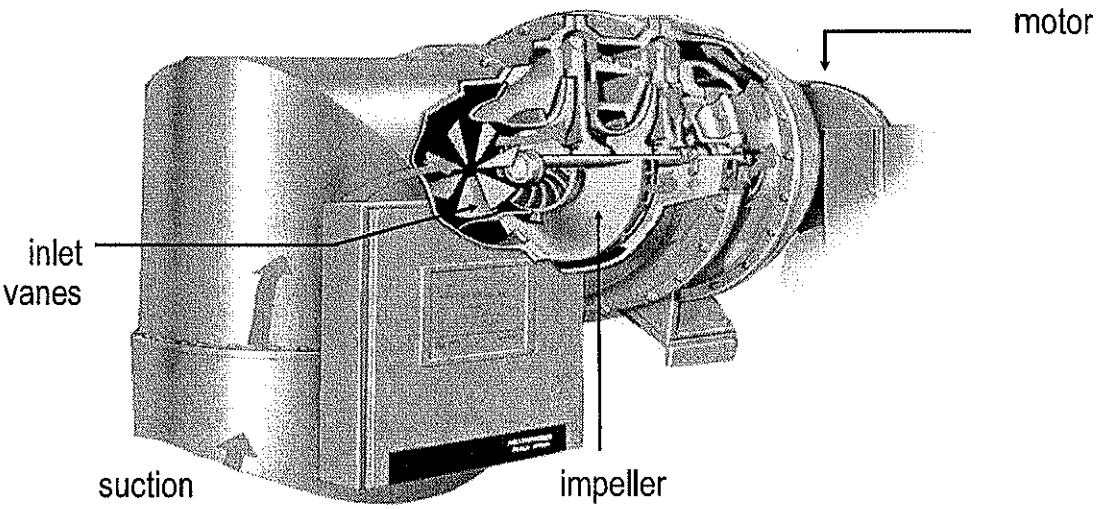

Open Compressor

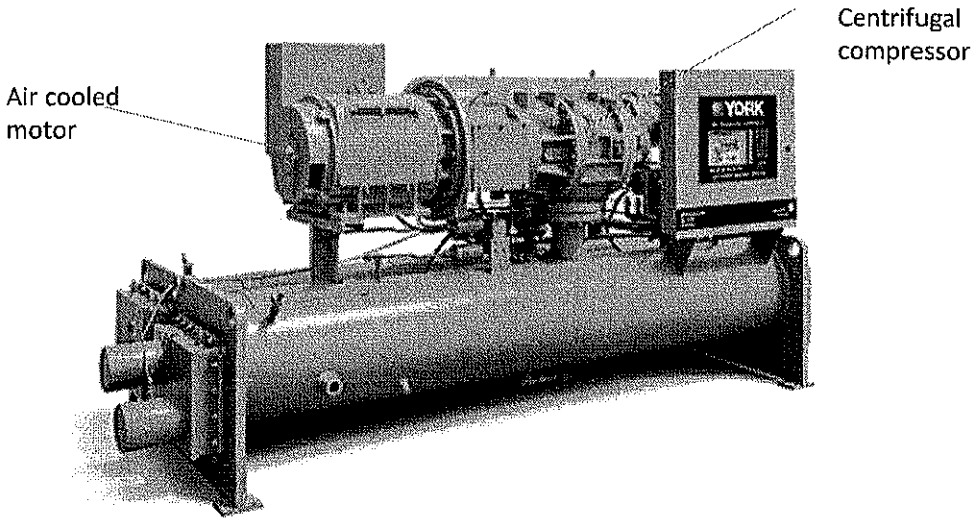

Hermetic Compressor

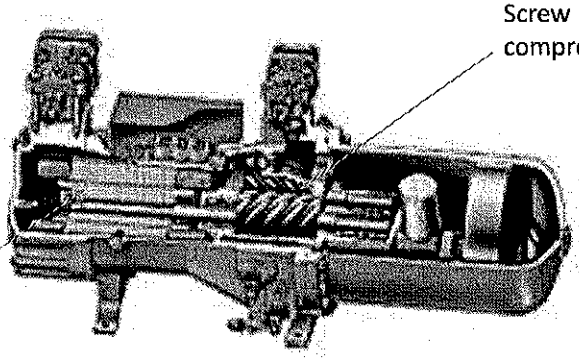

VSD loss is 5% at 100% load.

VSD compressors

- Higher part load efficiency (vs constant speed)
- Lower inrush current
- High power factor

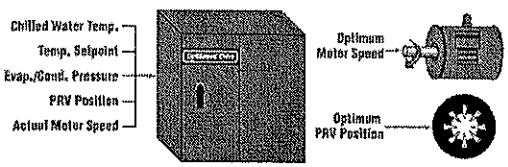

VSD Centrifugal compressor

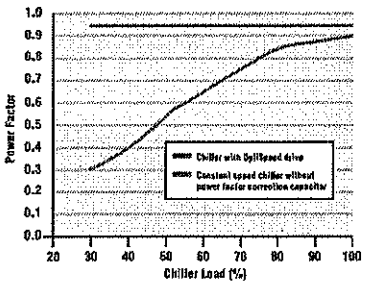

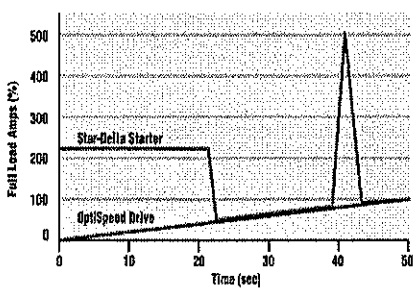

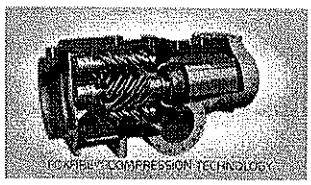

VSD Screw compressor

Oil-less magnetic bearing chillers

- Magnetic bearing design eliminates mechanical seals, wear surfaces, gears and slide valves for longer machine life and increased reliability.
- Permanent magnet motors offers higher efficiency
- Oil-free design eliminates oil management systems for improved compressor and system reliability. The oil-free design also eliminates the possibility of efficiency-robbing oil contamination of heat-transfer surfaces.
- VFD designed as an integrated component with the compressor. Reduced in-rush.

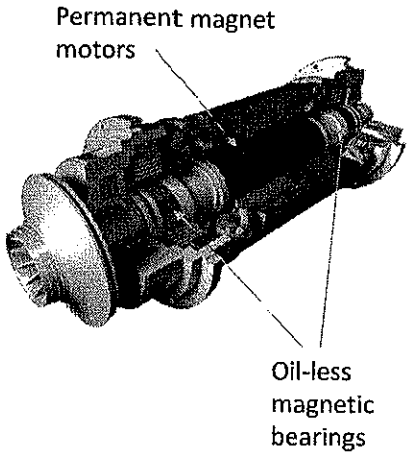

CHILLER PERFORMANCE RANGE

Water Cooled Centrifugal Chiller Performance



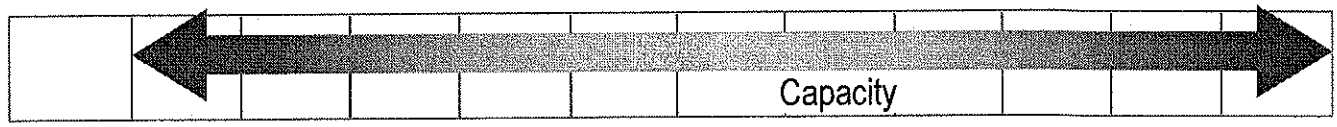

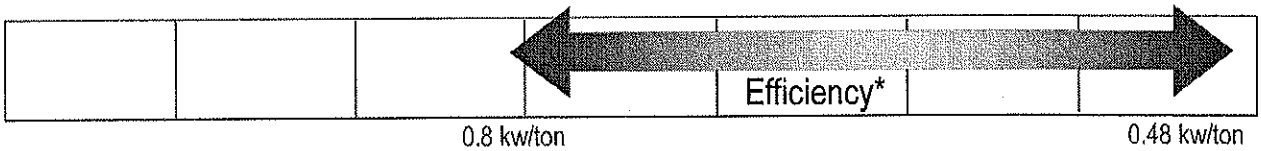

* Full Load efficiency rated at standard ARI conditions

Water Cooled Screw Chiller Performance

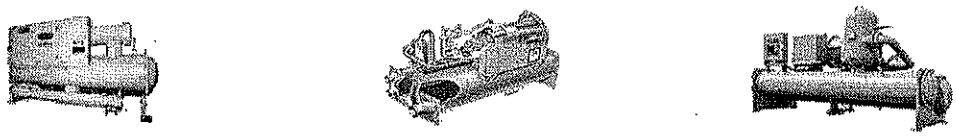

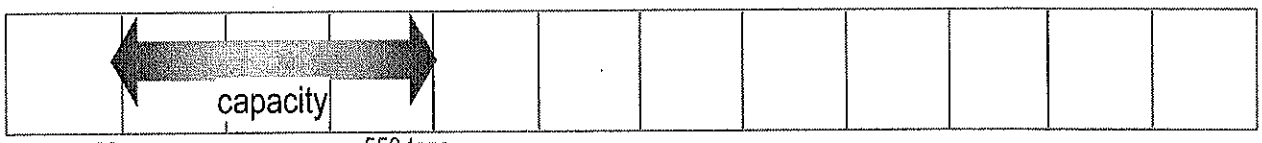

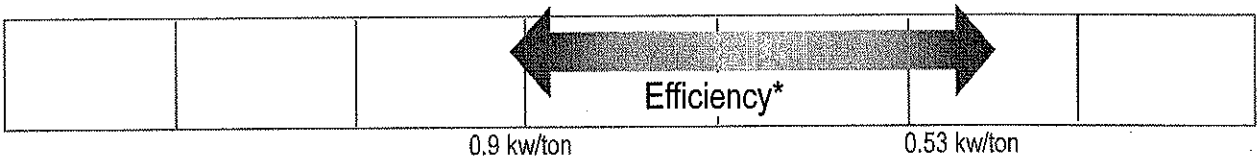

* Full Load efficiency rated at standard ARI conditions

Water Cooled Scroll Chiller Performance

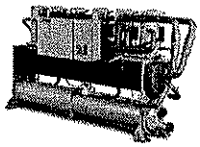

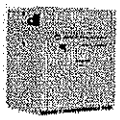

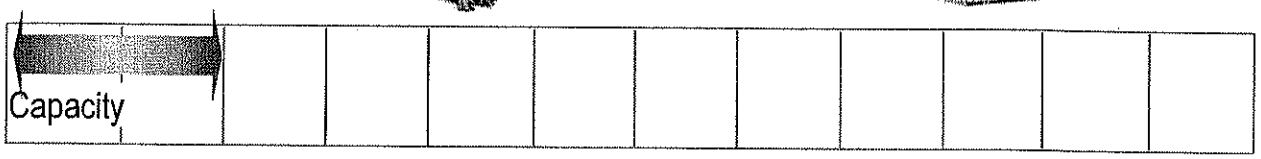

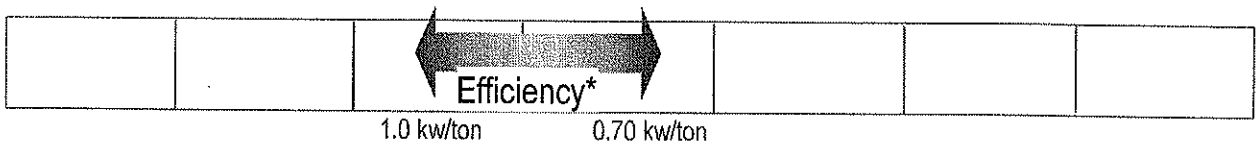

* Full Load efficiency rated at standard ARI conditions

Air Cooled Screw Chiller Performance



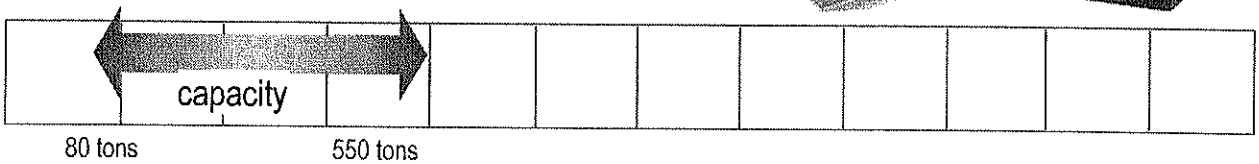

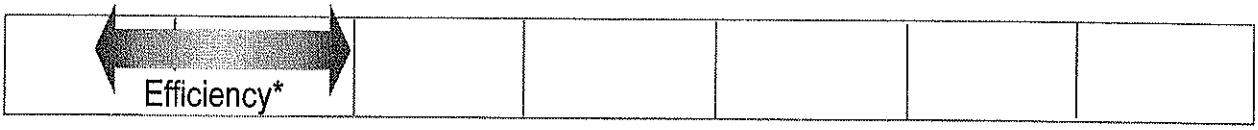

* Full Load efficiency rated at standard ARI conditions

Air Cooled Scroll Chiller Performance









* Full Load efficiency rated at standard ARI conditions

CHILLER PART LOAD PERFORMANCE CURVE

W/C Chiller part load performance

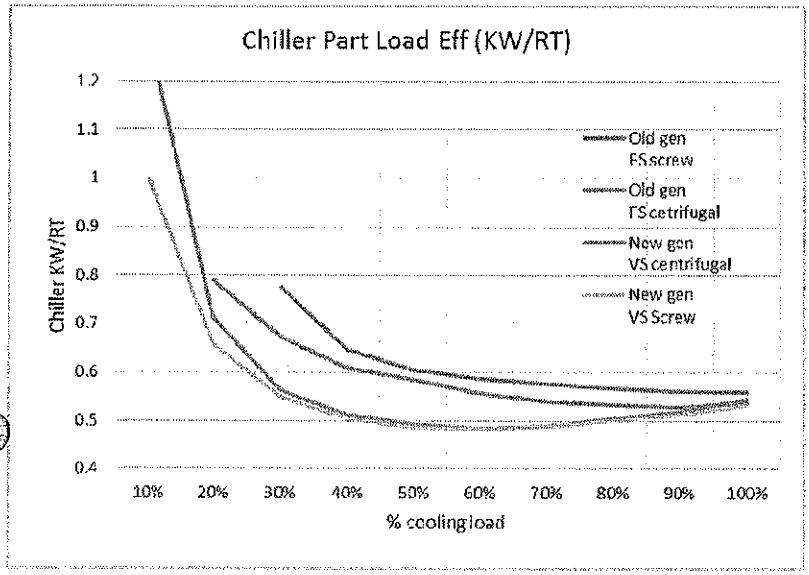

Old gen fixed speed chillers (R134a)
Peak eff: ~ 0.530 to 0.54 KW/RT
Peak eff point: 80-90% load

New gen variable speed chillers (R134a)
Peak eff: ~ 0.49 to 0.50 KW/RT
Peak eff point: 50-60% load

Performance rated at
CHW: 6.70C at fixed 2.4gpm/RT
CW: 29.4C at fixed 3.0 gpm/RT

Chiller performance are indicative and do not represent any particular brand.

Microsoft Excel Worksheet

REFRIGERANTS

GREEN MARK REQUIREMENT



Part 3- Environmental Protection

Refrigerants

Reduce the potential damage to the ozone layer and the increase in global warming through the release of ozone depleting substances and greenhouse gases. (1 point)

(a) Refrigerants with ozone depletion potential (ODP) of zero or with global warming potential (GWP) of less than 100.
(b) Use of refrigerant leak detection system at critical areas of plant rooms containing chillers and other equipments with refrigerants.

ODP and GWP Level of Refrigerants

Refrigerant Number	Chemical Name	Chemical Formula	Molecular Mass	Safety Group	Atmospheric Lifetime (Yrs)	ODP	GWP
11	trichlorofluoromethane	CCl_3F	137.4	A1	50	1	3800
12	dichlorodifluoromethane	CCl_2F_2	120.9	A1	102	1	8100
22	chlorodifuoromethane	$CHClF_2$	86.5	A1	12.1	.055	1500
32	difluoromethane	CH_2F_2	52	A2	5.6	0	650
123	2,2-dichloro-1,1,1-trifluoroethane	$CHCl_2CF_3$	153	B1	1.4	.02	90
125	Pentafluoroethane	CHF_2CF_3	120	A1	32.6	0	2800
134a	1,1,1,2-tetrafluoroethane	CF_3CH_2F	102	A1	14.6	0	1300
245fa	1,1,2,2,3-Pentafluoropropane	$CHF_2\,CH_2\,CF_3$	134.05	B1	8.8	0	820
290	Propane	$CH_3CH_2CH_3$	44	A3	<1	0	~0
404a	R-125/143a/134a (44/52/4)			A1			3260
407C	R-32/125/134a (23/25/52)			A1		0	1530
410A	R-32/125 (50/50)			A1		0	1730
500	R-12/152a (73.8/26.2)			A1		.74	6010
507a	R-125/143a (50/50)			A1			
600	Butane	$CH_3CH_2CH_2CH_3$	58.1	A3	<1	0	~0
717	Ammonia	NH_3	17	B2	N/A	0	0
718	Water	H_2O	18	A1	N/A	0	<1
744	Carbon dioxide	CO_2	44	A1	N/A	0	1

Theoretical Efficiency of R-123 Vs. R-134a

Model	Carnot	Ideal Cycle	
Property		R-123	R-134a
Chilled water Supply Temp (°F)	44	44	44
Cond. Water Supply Temp (°F)	85	85	85
Compressor Inlet Temp (°F)	44	44	44
Compressor Outlet Temp (°F)	95	95	95
Suction Line Press. Drop (°F)	N/a	0	0
Liq. Line Press. Drop (°F)	N/a	0	0
Evaporator Superheat (°F)	N/a	0	0
Condenser Subcooling (°F)	N/a	0	0
Isentropic Compressor Eff.	N/a	100%	100%
Compressor Motor Eff.	N/a	100%	100%
COP	10.88	8.949	8.472
KW/ton	0.323	0.393	0.415

Singapore HCFC Phase out plan

Why is there a cap on production and import of HCFCs in Singapore?

At the 19th Meeting of the Parties to the Montreal Protocol held in Sep 2007, Parties agreed to adjust their commitments to accelerate the phase out of HCFCs. Article-5 Parties, which include Singapore are obliged to freeze the production and consumption of HCFCs in 2013, followed by subsequent reduction from 2015 to 2030.

Singapore does not produce HCFCs. All HCFCs used in Singapore are imported from overseas. The use of HCFCs for local industries and end-users is still allowed till 2030, subject to the following stepwise phase-out schedule:

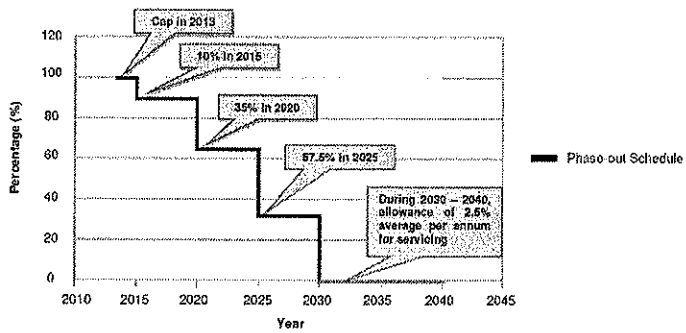

Source: http://www.nea.gov.sg/docs/default-source/anti-pollution-radiation-protection/chemical-pollution/mea-ods/circular-on-hydrochlorofluorocarbons-(hcfcs)-phase-out-management-plan-nbsp-in-singapore.pdf?sfvrsn=0

Montreal Protocol HCFC phase out plan for Non-Article 5 countries

Measurement & Verification Pte Ltd

Comparison of the Montreal Protocol and United States Phaseout Schedules

Montreal Protocol		United States	
Year to be Implemented	% Reduction in Consumption and Production, Using the Cap as a Baseline	Year to be Implemented	Implementation of HCFC Phaseout through Clean Air Act Regulations
2004	35.0%	2003	No production and no importing of HCFC-141b
2010	75.0%	2010	In addition to the HCFC-141b restrictions, no production and no importing of HCFC-142b and HCFC-22, except for use in equipment manufactured before 1/1/2010 (so no production or importing for NEW equipment that uses these compounds)
2015	90.0%	2015	In addition to the HCFC-141b, HCFC-142b and HCFC-22 restrictions, no production and no importing of any other HCFCs, except for use as refrigerants in equipment manufactured before 1/1/2020
2020	99.5%	2020	No production and no importing of HCFC-142b and HCFC-22
2030	100.0%	2030	No production and no importing of any HCFCs

Next generation refrigerants

Measurement & Verification Pte Ltd

Next Generation Refrigerants:

High COP

Low GWP

Near zero ODP

Low toxicity and low flammability

Comparable Cost (vs HFCs and HCFCs)

http://www.achrnews.com/articles/116977-is-the-next-generation-refrigerant-here

THANK YOU

Measurement & Verification Pte Ltd

