SIEMENS



Power Quality devices for all applications

SICAM – Power Quality and Measurements

Catalog SR 10 · Edition 4

siemens.com/powerquality

Contents

SICAM – Power Quality and Measurements

Energy Automation

Catalog SR 10 · Edition 4

Invalid: Previous documents

1. Introduction	Page
Power quality – Smart Grids	1/4
Product overview: Devices, applications, products	1/6

1

Products

2. Power Meter	
SICAM P50 / P55	2/1 to 2/16
SICAM P850	2/17 to 2/32
SICAM MMU	2/33 to 2/48

2

3. Digital Measurement Transducer	
SICAM T	3/1 to 3/8

3

4. Power Quality Recorder	
	4/1 to 4/8
SICAM P855	4/9 to 4/32
SICAM Q80	4/33 to 4/56
SICAM Q100	4/57 to 4/84

4

5. Fault Recorder	
SIPROTEC – see SIPROTEC 5 Catalog	5/1 to 5/18

5

6. Fault Record and Power Quality Analysis System	
SICAM PQS and SICAM PQ Analyzer	6/1 to 6/12

6

7. Wide Area Monitoring with PMU	
SIGUARD PDP	7/1 to 7/12

7

8. Legal Notice	
	8/1

8

ISO 9001
ISO 14001
DNV
Certified Company

OHSAS 18001
DNV
Certified Company

The products and systems described in this catalog are manufactured and sold according to a certified management system (acc. to ISO 9001, ISO 14001 and BS OHSAS 18001).

1

Make power quality visible – Smart grids always with power quality

Electrical power is becoming more important as an energy resource. The global demand for electrical energy is increasing day per day in the same time electrical power supply systems are facing new challenges. The increasing infeed of renewable energy resources such as wind, solar, hydro, and increasing demand of energy efficiency actions in order to meet environmental protection regulations, e.g. CO_2 reduction, in combination with regional power supply systems of different utilities and the liberalization of the energy market, are only a few challenges for our modern power supply networks.

To meet all these challenges, a lot of measures have to be taken into account:

- Power system automation, as in smart grids
- Load shedding and other load control techniques such as demand response mechanisms to manage a power system. (i.e. directing power where it is needed in real-time)
- Increasing the reliability of the power grid by detecting faults early, allowing for isolation of operative system, and the prevention of power outages.
- Increasing the power quality by precise analysis and automated correction of sources of system degradation.
- Wide area measurement and control, in wide area grids, regional transmission networks, and local distribution grids.

Every country or even every region has its specific behavior of the power grid. Therefore the key to an excellent power supply is, first of all, to know the relevant local system circumstances in detail. In this way, the system health can be determined, adapted and improved in a continuous process. Using real-time information and reporting functions is essential to anticipate, detect, and respond to system and power quality problems, and service disruptions.
Therefore, reliable data assessment is the first priority in this scenario.
The varieties of available parameters that lead to a wide grid analysis and power excellence is large and can be grouped into the following disciplines:

Grid monitoring

The need for monitoring and recording at the transmission level has been recognized for a long time. The experience with centralized disturbance recording systems has shown how valuable this information is in order to allow for a better understanding of the steady-state and dynamic behavior of the system. Nevertheless, as already explained, the complexity of electrical power systems has increased, and in the actual interconnected power system influences, a wide area monitoring has become essential.
Grid monitoring is therefore about the understanding what is going on in particular cases, considering the wide grid circumstances, where fault location, protection behavior and system stability, through phasors measurement monitoring are analyzed. Fault recorders and phasor measurement units (PMU) are devices used for this discipline.

Power quality monitoring

Power quality is a technical term that has practical an impact on the connected equipment. The electrical power is defined with a certain voltage level, waveform (sinusoidal) and a specific frequency (e.g. 50 Hz), which is generated and transmitted and distributed to the individual load. These loads have an uncomely effect; they can change the quality

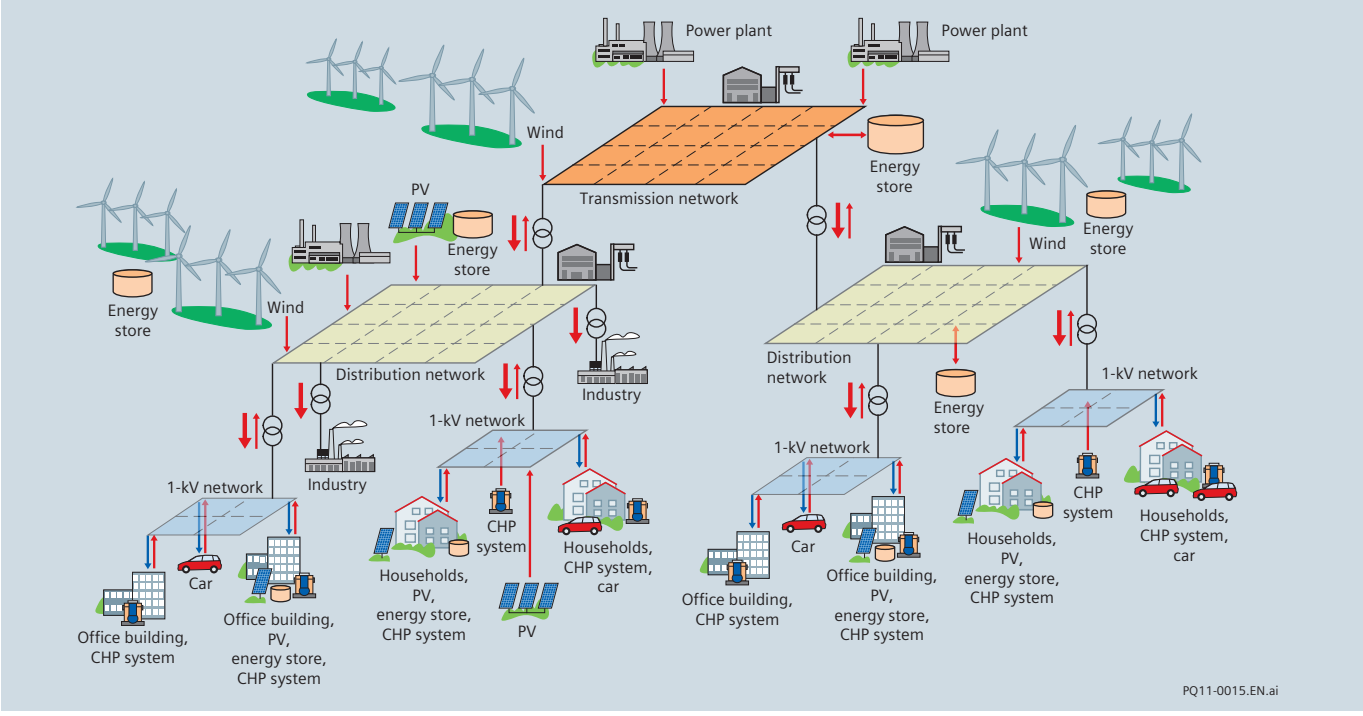

Fig. 1/1 The modern power grid

of the electrical power by influencing the waveform, the frequency or the voltage magnitude, which has subsequently an impact on the connected equipment.
In worst case, a poor power quality can lead to a system malfunction. Power quality effects are mainly common or mainly produced through large loads (e.g. industrial applications) and / or changings of actual power system status (e.g. switching operations) as well as due to external influences (e.g. lightning). Power quality standards (e.g. EN 50160) are used to define the limits of the electrical quantities allowing connected equipment to work properly without significant loss of performance.
Power quality monitoring as an integral part of technical risk management requires measurement devices and applications to measure, record and evaluate necessary data. For that purpose, power quality recorders and specific evaluation applications are utilized making the power quality of an electrical power supply system visible.

Power monitoring
We use to distinguish power monitoring for operative proposals and economical proposals. Operative proposal is based to monitor energy not for direct billing proposal (e.g. costs per KWh), but electrical parameters for system controlling, e.g. voltage, current, power, power factor, etc. For these tasks, power monitoring devices (e.g. power meters, transducers) are mainly used for capturing interesting data whereby these devices are permanently installed and connected via standard communication interfaces to a monitoring system (control center, substation automation system).
Power monitoring systems support simple monitoring tasks as well as more complex tasks, such as power trending, controlling, and identification of sources of energy consumption and load profiles of power supply segments. They allow cost allocation, and further reduction of energy costs can be carefully targeted to specific equipment.

The world's increasing demand for electric power calls for highest efficiency and absolute reliability in power networks. Today, currents, voltages and performance values in power distribution systems are routinely measured in order to determine the load. It is important to ensure that no overloading occurs. However, the need for measuring currents, voltages and performance values for the purpose of increasing system availability are nowhere near exhausted. There is tremendous potential here for installing power meters and transducers to support the necessary measurement tasks.
Additionally, Smart Grid technology provides consistent answers to these challenges, but requires use of technologies that can respond to the requirements mentioned.
E.g. fast controlling reaction, local monitoring, high accuracy, and open communication for system integration capabilities are essential features in this context.
Siemens power monitoring solutions are designed to match these applications. They are user-friendly, compatible with the latest communication standards, impart long-term reliability, and provide comprehensive power monitoring functionalities.

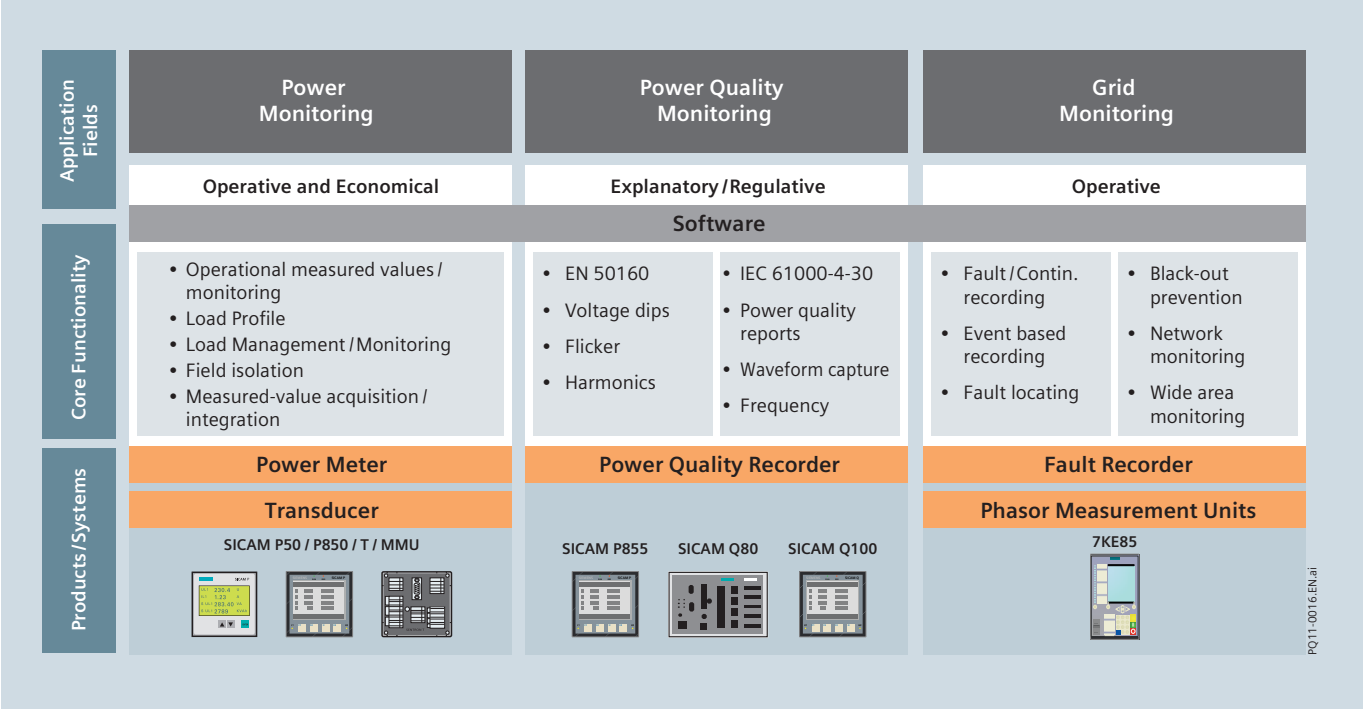

Fig. 1/2 Application and products

Introduction

Product overview

					
		SICAM P50/P55	SICAM T	SICAM MMU	
Main Functions		Power Meter	Measuring Transducer	Monitoring Unit	
Display		–/●	–	–	
Housing (Width x Hight x Depth in mm)		96 x 96 x 76.5	96 x 96 x 104	96 x 96 x 104	
Mounting		DIN rail/switch panel	DIN rail	DIN rail	
Degree of protection		IP20/IP41/IP65	IP20	IP20	
Configuration and Online View		SICAM P Manager	Web Browser	Web Browser	
Data Analysis and Reporting		–	–	–	
Basic Measurement	V, I, f, P, Q, S, energy, phase angle, cosφ	●	●	●	
Accuracy % (V, I)		0.2/0.2	0.2/0.2	0.2/0.2	
Programmable limit values		●	●	●	
Harmonics	Recordings	21.	–	21.	
	According IEC 61000-4-7	–	–	–	
Min-, Max, Mean values		●	–	–	
Power Quality IEC 61000-4-30		–	–	–	
EN 50160 Power Quality Data		–	–	–	
Flicker IEC 61000-4-15		–	–	–	
Waveform recording (see device specifications)		●	–	–	
Loud profile		–	–	–	
Tariffs		–	–	–	
Transient capture		–	–	–	
Sampling rate		3.2 kHz	3.2 kHz	3.2 kHz	
Recorders		Mean values	–	–	
Averaging intervals		–	–	–	
Trigger		–	–	–	
Limit Violation/Notification		●	●	●	
Mass storage		1 MB	–	–	
Inputs/Outputs	AC analog inputs (V/I)	4/3	4/3	4/3	
	Binary outputs	2+2 (opt.)	2	2+6 (opt. with SICAM I/O Unit)	
	Binary inputs	2 (opt.)	–	6 (opt. with SICAM I/O Unit)	
	Analog outputs	2 (opt.)	4 (opt.)	–	
	DC analog inputs	2 (opt.)	–	–	
Time synchronization		Serial	NTP/Serial	NTP/Serial	
Communication	Serial	Modbus RTU/Profibus/ IEC 60870-5-103	Modbus RTU/Profibus/ IEC 60870-5-103	Modbus RTU/Profibus/ IEC 60870-5-103	
	USB	–	–		
	Ethernet	–	Modbus TCP/IEC 61850	Modbus TCP/ IEC 60870-5-104 (redun.)	
Data Formats	Fault Record Data	COMTRADE (SIMEAS P Manager)	–	–	
	PQ Data	–	–	–	
	Mesurements	–	–	–	
see page		2 / 1	3 / 1	2 / 33	

Table 1/1 Overview Power monitoring devices

			
	SICAM P850	SICAM P855	SICAM Q80
	Power Meter	**Power Meter and PQ Recorder**	**PQ Recorder**
	– / ●	– / ●	–
	96 x 96 x 100	96 x 96 x 100	166 x 105 x 126
	DIN rail / switch panel	DIN rail / switch panel	DIN rail
	IP20 / IP40 / IP51	IP20 / IP40 / IP51	IP20
	Web Browser	Web Browser	SICAM Q80 Manager
	–	Web Browser / SICAM PQS / SICAM PQ Analyzer / SENTRON powermanager	SICAM Q80 Manager / SICAM PQS / SICAM PQ Analyzer
	●	●	●
	0.2 / 0.2	0.2 / 0.2	0.1 / 0. 1
	●	●	●
	40.	40.	50.
	–	●	●
	–	●	●
	–	Class S	Class A
	–	●	●
	–	●	●
	–	●	●
	–	–	–
	–	–	–
	–	–	20 µs
	10.24 kHz	10.24 kHz	10.24 kHz
	–	Measurements, Mean values, PQ Data, Events and Waveforms	Measurements, Mean values, PQ Data and Waveforms
	–	30 s – 2 h	3 s – 2 h
	–	RMS-Level	RMS-Level / Binary / Network
	●	●	●
	–	2 GB	2 GB
	4 / 3	4 / 3	4 / 4 or 8 / 0
	2	2	4
	–	–	4
	–	–	–
	–	–	–
	NTP / Serial	NTP / Serial	NTP / GPS (NMEA) / IRIG-B / DCF77
	Modbus RTU / IEC 60870-5-103	Modbus RTU / IEC 60870-5-103	–
	–	–	–
	Modbus TCP / IEC 61850	Modbus TCP / IEC 61850	Modbus TCP
	–	COMTRADE (Web Browser / SICAM PQS)	COMTRADE (via SICAM PQS)
	–	CSV, PQDIF (Web Browser / SICAM PQS)	PQDIF (via SICAM PQS)
	–	CSV (via Web Browser)	CSV (via SICAM Q80 Manager)
	2 / 17	4 / 9	4 / 33

Introduction

Product overview

			
		SICAM Q100	SIPROTEC 7KE85
Main Functions		Power Meter and PQ Recorder	Fault Recorder opt. PMU and PQ Recorder
Display		– / ●	– / ●
Housing (Width x Hight x Depth in mm)		96 x 96 x 100	145 (220) x 268 x 229
Mounting		DIN rail / switch panel	switch panel, flush-, surface mounting
Degree of protection		IP40	IP50 / IP51
Configuration and Online View		Web Browser	DIGSI 5
Data Analysis and Reporting		Web Browser / SICAM PQS / SICAM PQ Analyzer / SENTRON powermanager*	DIGSI 5 / SICAM PQS / SICAM PQ Analyzer
Basic Measurement	V, I, f, P, Q, S, energy, phase angle, cosφ	●	●
Accuracy % (V, I)		0.1 / 0.1	0.1 / 0.1
Programmable limit values		●	●
Harmonics	Recordings	50. / 63.****	50.
	According IEC 61000-4-7	●	●*
Min-, Max, Mean values		●	Mean values
Power Quality IEC 61000-4-30		Class A	Class S*
EN 50160 Power Quality Data		●	●*
Flicker IEC 61000-4-15		●	●
Waveform recording (see device specifications)		●	●
Loud profile		●	–
Tariffs		●	–
Transient capture		80 – 100 µs	60 – 80 µs
Sampling rate		10.24 kHz	max. 16 kHz (1 / 2 / 4 / 8 / 16 adjustable)
Recorders		Measurements, Mean values, PQ Data, Events, Waveforms, Load Profiles and Transients	Wafeforms / Dynamic Distturbances / Continuous / Sequent of Events / PQ Data*
Averaging intervals		30 s – 2 h	1 s – 900 s
Trigger		RMS-Level / Binary	Level- / Gradient- / Goose- / Local- / Binary / Logical-Trigger / ...
Limit Violation / Notification		●	●
Mass storage		2 GB	16 GB
Inputs / Outputs	AC analog inputs (V / I)	4 / 4	8 – 40 *** (4 / 4, 8 / 0, 4 / 12, 8 / 8)
	Binary outputs	2	9**
	Binary inputs	2 (12 E / 12 A with SICAM I/O Unit)	11** (11+ up to 192 with I/O 230)
	Analog outputs	–	–
	DC analog inputs	–	4 – 36*** 4 – 12 / 20** (+/- 20 mA / +/- 10 V***)
Time synchronization		NTP / Serial	IRIG-B / DCF77 / SNTP / IEEE 1588
Communication	Serial	Modbus RTU Master and Gateway	–
	USB	–	DIGSI 5
	Ethernet	Modbus TCP / IEC 61850	DIGSI 5 / IEC 61850 / IEEE C37.118
Data Formats	Fault Record Data	„COMTRADE (Web Browser / SICAM PQS)"	COMTRADE (DIGSI 5 / SICAM PQS)
	PQ Data	„CSV, PQDIF (Web Browser / SICAM PQS)"	PQDIF (SICAM PQS)
	Mesurements	„CSV (via Web Browser)"	–
see page		4 / 57	5 / 1

Tabelle 1/1 Overview Power monitoring devices

* in preparation ** depends on flexible combination of IOs *** more than 16 analog channels in preperation
**** Harmonics will be measured and displayed in Web Browsers up to 63. Up to 50. harmonics will transfered over protocols.

SIEMENS



Power Quality devices for all applications

SICAM P50/P55
Power Meter

siemens.com/powerquality

Contents – SICAM P50/P55

	Page
Description	2/3
Function overview	2/4
Measured values and tolerances	2/7
Description of I/O modules	2/8
Configuration software	2/9
Benefits	2/11
Typical terminal assignments	2/12
Technical data	2/13
Dimension drawings	2/14
Selection and ordering data	2/15

2

ISO 9001
ISO 14001
DNV
Certified
Company

OHSAS 18001
DNV
Certified
Company

The products and systems described in this catalog are manufactured and sold according to a certified management system (acc. to ISO 9001, ISO 14001 and BS OHSAS 18001).

Description

SICAM P is a power meter for panel mounting with graphic display and background illumination, or for standard rail mounting, used for acquiring and/or displaying measured values in electrical power supply systems.
More than 100 values can be measured, including r.m.s. values of voltages (phase-to-phase and/or phase-to-ground), currents, active, reactive and apparent power and energy, power factor, phase angle, harmonics of currents and voltages, total harmonic distortion per phase plus frequency and symmetry factor, energy output, as well as external signals and states.

Main features of SICAM P:

- Switch panel mounting with display of the device SICAM P50: dimensions 96 mm x 96 mm/3.78 in. x 3.78 in.
- DIN rail mounting without display of the device SICAM P55
- Expandable with additional module for analog input or analog output
- 2 freely programmable binary outputs: e.g. energy counters, limit violations or status signals
- Trigger function for settable limits programmed for sampled or r.m.s. values
- Generating lists of minimum, average and maximum values for currents, voltages, power, energy, etc.
- Independent settings for currents, voltages, active and reactive power, power factor, etc.
- Up to 6 alarm groups can be defined using AND/OR for logical combinations
- Alarms can be used to increase counter values, to trigger the oscilloscope function or to generate binary output pulses.

Input and output modules

SICAM P50 can be equipped with additional analog or digital input or output modules. SICAM P50/P55 comes with 1 slot where the module may be installed. For different application areas, 5 different modules are available.

Module assignment

The assignment of the different analog/digital modules can only be done in the course of an order of a SICAM P.
A change or a retrofit of modules of an existing SICAM P is not possible. Fig. 2/4 shows an example of extended I/O for various applications.

Applications

Power monitoring systems with SICAM P, a permanently installed system, enables continuous logging of energy-related data and provides information on operational characteristics of electrical systems. SICAM P helps identify sources of energy consumption and time of peak consumption.
This knowledge allows to allocate and reduce energy costs.
The major application area is power monitoring and recording at MV and LV level. The major information types are measured values, alarms and status information.



Fig. 2/1 Power Meter – SICAM P50

The input modules work with external signals with a measurement range of DC 0 – 20 mA. Mean values of all external analog channels as well as states of digital channels can be recorded and saved into the memory. All recorded quantities and binary state information can be "read out" and evaluated with the configuration software SICAM P Manager. Output modules can be used for conversion of any electrical quantity (current, voltage, etc.) into a DC 0 – 20/4 – 20 mA output signal, generation of impulses for metering, indication of limit value violations, as well as for switching operations.

Application example 1 *(Fig. 2/2)*

SICAM P as a panel-mounted device for direct electrical power monitoring. With a very simple configuration, the display of measured values is adaptable to the specific requirements of the user.



Fig. 2/2 SICAM P55

Function overview

Application example 2 *(Fig. 2/3)*
SICAM P as a panel-mounted or snap-on mounted device for use on a process bus. Network linking is possible with the integrated RS485 port with the standard Profibus DP and Modbus RTU/ASCII communication protocol. Furthermore, it is also possible to integrate SICAM P50 into communication networks with IEC 60870-5-103 as standard protocol. That allows several SICAM P measured parameters to be indicated, evaluated and processed at a central master station. The major application area is the integration into PLC systems as a transducer.

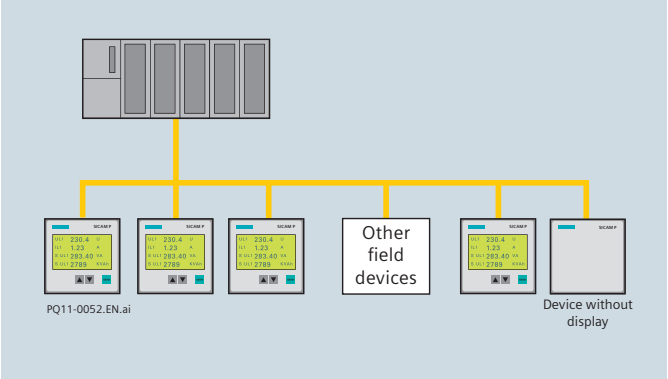

Fig. 2/3 SICAM P with Profibus DP, Modbus and IEC 60870-5-103

Application example 3 *(Fig. 2/4)*
SICAM P can be ordered for snap-on mounting on a 35 mm/1.38 in. DIN rail. For carrying out the setting of the device, the configuration software is necessary.

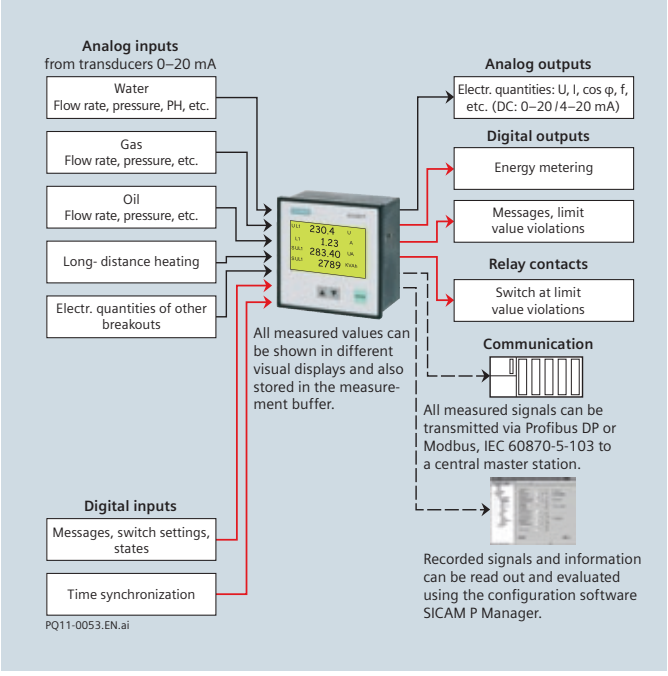

Fig. 2/4 SICAM P: Application examples

Function overview

- Measurement of voltage, current, active & reactive power, frequency, active & reactive energy, power factor, symmetry factor, voltage and current harmonics up to the 21st, total harmonic distortion
- Single-phase, three-phase balanced or unbalanced connection, four-wire connection
- Communications: Profibus DP, Modbus RTU/ASCII or IEC 60870-5-103 communication protocol
- Simple parameterization via front key or RS485 communication port using SICAM P Manager software
- Graphic display with background illumination with up to 20 programmable screens
- Real-time clock: Measured values and states will be recorded with time stamps
- 1 MB memory management: The allocation of the non-volatile measurement memory is programmable.
- Recording and display of limit value violations and log entries
- Battery: Recordings like limit value violations or energy counter values stay safely in the memory up to 3 months in case of a blackout.

Measuring functions

Measured input voltages and input currents are sampled for calculation of the corresponding r.m.s. values. All parameters derived from the measured values are calculated by a processor. They can be displayed on the screens and/or transmitted via the serial interface. Measurement of voltage, current, active & reactive power, frequency, active & reactive energy, power factor, symmetry factor, voltage and current harmonics up to the 21st, total harmonic distortion are available. With the SICAM P it is also possible to define several limit value groups with different limit values for the measured parameters. These can be combined with logical elements, such as AND, OR. Violations are counted and indicated on the screen or made available at the binary outputs. Triggering of the oscilloscope is possible as well.

Quality

Development and production of the device is carried out in accordance with ISO 9001, ensuring highest quality standard. That means high system reliability and product service life. Further characteristics are the constant high accuracy over years, CE designation, EMC strength, as well as the compliance with all relevant national and international standards.

Technology

Powerful on-board microprocessors ensure fast registration and updating of measured parameters.
SICAM P can be connected to any power system configuration directly (up to 690 V systems) or via transformer – from single-phase to four-wire balanced or unbalanced three-phase systems. SICAM P can be connected to any power system configuration up to 1 or 5 A or via current transformer.
The power supply unit allows rated supply voltages from 24 to 250 V DC and 100 to 230 V AC.

Communication

As communication between field devices is becoming standard, the development of the SICAM P communication interface is focused on the universality and flexibility of the transmission protocol. It is connected via an RS485 port with standard 9-pin D-Sub connector.
The SICAM P comes with the following standard communication protocols:

- Profibus DP V1 in compliance with EN 50170 Volume 2 and Modbus RTU / ASCII
- Modbus RTU / ASCII and IEC 60870-5-103.

Limit values

Several limit value groups with up to 6 selectable parameters can be set in SICAM P. The values can be combined with logical elements such as AND / OR; limit value violations are counted, they are available at binary outputs or used for triggering the oscilloscope.

Inputs / Outputs

Figure 2 / 7 shows the I / O pin configuration of SICAM P. Depending on the type of power system, the non required inputs remain unassigned.

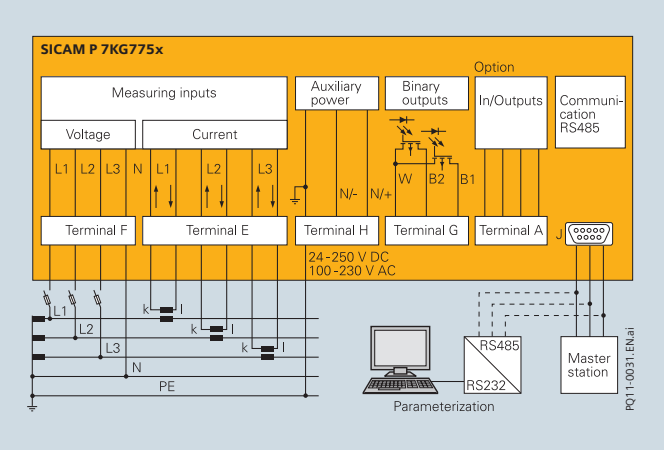

Fig. 2/5 SICAM P: Inputs / outputs

Configuration

Configuration of SICAM P is very easy. It can be done directly over the device display (if available) or over the SICAM P Manager parameterization software. Rapid configuration (even without consulting the manual) is possible due to detailed index and operation via cursor and enter key. Configuration and calibration settings are tamper-proof by password protection.

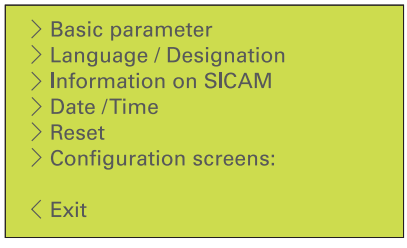

Memory management

Due to the memory capacity (1 Mbyte) and the implemented memory management, it is possible to freely configure the measurement memory for mean values, power recordings, oscilloscope, limit value violations and binary states.
After the assignment of the percentage, the corresponding record time will be calculated and shown on the display automatically.

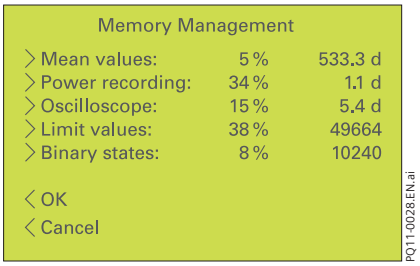

Memory "read-out"

Recorded quantities and binary state information can be read out with the configuration software SICAM P Manager using the RS485 interface. This requires a separate cable together with an RS232 / RS485 converter. The configuration software offers features for indication and evaluation of all saved measured values and binary information.
For further information, please refer to the chapter "SICAM P configuration software package".

Display and screens

All parameters can be displayed on the SICAM P screens as required by the user. Up to 20 screens can be defined and selected with the front keys. Switching from one screen to another can be automatic or manual.
Clear designations as well as menu-driven configuration guarantee simple and easy operation of the SICAM P screens. Number, type, content and sequence of the screens are configurable, e.g.:

- 2, 3, 4 or 6 measured values in one screen
- One list screen for minimum, average and maximum values
- Screens for harmonics
- Screen serving as phasor (vector) diagram.

Due to a wider graphical display, some display functions such as analog screen, oscilloscope, r.m.s. curve, harmonic are available.
SICAM P is delivered with programmed default settings.
A status line displayed in the measured value screens indicates status, interfacing and diagnostic messages of SICAM P. The display is automatically refreshed every 1 s.

Function overview

List of screens examples

3-phase screen values

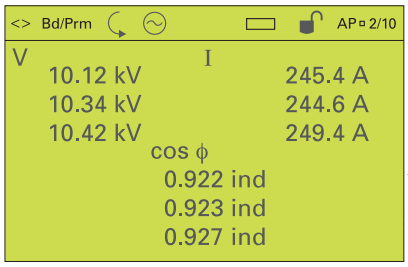

V, I, cos φ

Digital values screen

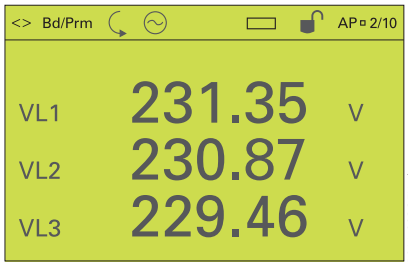

3 measured values – digital / analog

Digital / Analog screen

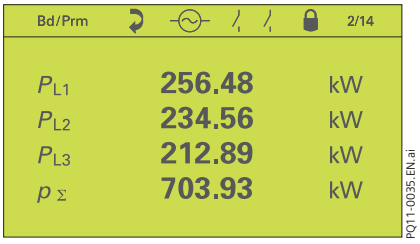

4 measured values – digital

Digital values screen

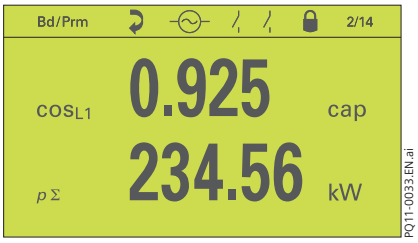

2 measured values – digital

Measured values and tolerances

Measured values	Measuring path [1]	Output to	Tolerances [2]
Voltage	L1-N, L2-N, L3-N, (N-E)	▼ ■ ● ○	±0.1 % [2] / ±0.3 % [6]
Voltage	L1-L2, L2-L3, L3-L1, Σ [3)]	▼ ■ ● ○	±0.1 % [2] / ±0.3 % [6]
Current	L1, L2, L3, N, Σ [3)]	▼ ■ ● ○	±0.1 % [2] / ±0.3 % [6]
Active power P + import, –export	L1, L2, L3, Σ	▼ ■ ● ○	±0.5 %
Reactive power Q + cap, –ind	L1, L2, L3, Σ	▼ ■ ● ○	±0.5 %
Apparent power S	L1, L2, L3, Σ	▼ ■ ● ○	±0.5 %
Power factor $\lvert\cos\varphi\rvert$ [4]	L1, L2, L3, Σ	▼ ■ ● ○	±0.5 %
Active power factor $\lvert\cos\varphi\rvert$ [4]	L1, L2, L3, Σ	▼ ■ ● ○	±0.5 %
Phase angle [4]	L1, L2, L3, Σ	▼ ■ ● ○	±2 °
Frequency [5]	L1-N	▼ ■ ● ○	±10 mHz
Active energy demand	L1, L2, L3, Σ	▼ ■ ○	±0.5 %
Active energy supply	L1, L2, L3, Σ	▼ ■ ○	±0.5 %
Active energy, total	L1, L2, L3, Σ	▼ ■ ○	±0.5 %
Active energy Σ, total	Σ	▼ ■ ○	±0.5 %
Reactive energy, inductive	L1, L2, L3, Σ	▼ ■ ○	±0.5 %
Reactive energy, capacitive	L1, L2, L3, Σ	▼ ■ ○	±0.5 %
Reactive energy, total	L1, L2, L3, Σ	▼ ■ ○	±0.5 %
Apparent energy	L1, L2, L3, Σ	▼ ■ ○	±0.5 %
Unbalance voltage	four-wire system	▼ ■ ● ○	±0.5 %
Unbalance current	four-wire system	▼ ■ ● ○	±0.5 %
THD voltage	L1, L2, L3	▼ ■ ● ○	±0.5 %
THD current	L1, L2, L3	▼ ■ ● ○	±0.5 %
Harmonic voltage V 3rd, 5th, 7th, 11th, 13th, 17th, 19th, 21st	L1, L2, L3	▼ ■ ● ○	±0.5 %
Harmonic current I 3rd, 5th, 7th, 11th, 13th, 17th, 19th, 21st	L1, L2, L3	▼ ■ ● ○	±0.5 %
Limit value violations	counter 1, 2, 3, 4	▼ ■	
Analog inputs	external	▼ ■	
Binary inputs	external	▼ ■	

▼ Measured values can be displayed on measured-value screens.
■ Measured values transmitted via communication protocols Profibus DP + Modbus.
● Measured values selectable for list screens.
○ Measured values transmitted via IEC 60870-5-103.

[1] Phases are displayed based on the type of connection.
[2] Tolerances at reference conditions are applicable from 0.5 to 1.2 times nominal value.
[3] Average value of all phases.
[4] Measuring beginning with 2 % of the internal apparent power.
[5] Measuring beginning with 30 % of the input voltage L1-N.
[6] Limit values for the complete temperature range referring to: 0.1 to 1.2 times nominal range.

Table 2/1 Measured values and tolerances

Description of I/O modules

Description and applications	Terminal	Assignment
Analog input module SICAM P can be equipped with a maximum of 1 analog input module. Each module comes with 2 analog input channels, designed for a rated measurement range of 0 to 20 mA DC. The modules themselves are galvanically isolated against the internal circuit. The two channels of the module are not galvanically isolated against each other. The analog input modules can be used for: – Acquisition and display of measured signals with a measurement range of 0 to 20 mA DC – Registration of limit value violations	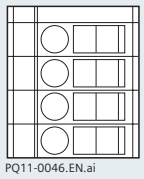 PQ11-0046.EN.ai	AI1+ AI1- AI2+ AI2-
Binary input module SICAM P can be equipped with a maximum of 1 binary input module. Each module comes with 2 galvanically isolated and rooted binary input channels. The input voltage will be transformed into a constant current. The binary input modules can be used for: – Registration of binary states / messages – Time synchronization of SICAM P	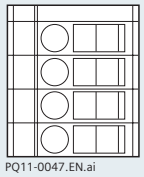 PQ11-0047.EN.ai	BI1+ BIR BIR BI2+
Analog output module SICAM P can be equipped with a maximum of 1 analog output module. The module comes with 2 channels, designed for a rated measurement range of 0 to 20 mA DC. The module itself is galvanically isolated against the internal circuit. The two channels of the module are not galvanically isolated against each other. The analog output modules can be used for: – Output of electrical quantities (current, voltage, power φ, $\lvert\cos\varphi\rvert$, frequency, etc.) between a rated measurement range of 0 to 20 mA DC or 4 to 20 mA DC	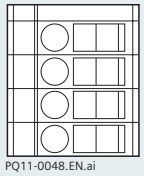 PQ11-0048.EN.ai	AO1+ AO1- AO2+ AO2-
Binary output module SICAM P can be equipped with a maximum of 1 binary output module. The module comes with 2 rooted binary output channels, realized with 2 solid-state contacts. The binary output modules can be used for: – Generation of impulses for metering – Indication of limit value violations – Indication of the device status – Indication of the rotation vector	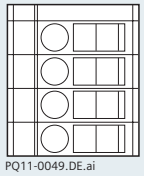 PQ11-0049.DE.ai	BOR BO1+ BO2+ frei
Relay output module SICAM P can be equipped with a maximum of one relay output module. The relay output module comes with 3 rooted electromechanical contacts. With these contacts, higher power can be switched which is not possible when using the solid-state contacts. The relay contacts can be configured in the same manner as the channels of the binary output module. The relay contacts can be used: – As a switch at limit value violations, e.g. compensation of reactive power	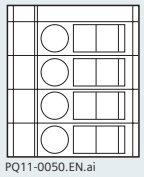 PQ11-0050.EN.ai	RO1 RO2 RO3 ROR

Table 2/2 Description of I/O modules

Configuration software

Application

The SICAM P configuration software package enables a simple way to carry out the device settings. The package consists of the parameterizing software, a configuration cable with RS232/RS485 converter, as well as a plug-in power supply for the converter. The SICAM P can be connected to any standard PC via the RS232/RS485 converter by means of a 9-pin D-Sub connector.
The software runs with Windows 2000 and XP Professional edition.
The configuration software permits a faster configuration of the SICAM P devices. The user can set and store parameters even without having a unit by his side. The parameters are transferred to the SICAM P by using the "Send to unit" command. Thus, a number of SICAM P units can be configured with minimum effort. The stored set of parameters is simply reloaded when a unit has to be replaced. Furthermore, firmware updates can be reloaded by means of the SICAM P configuration software.
The configuration package supports all SICAM P units and is absolutely essential for the devices SICAM P55.

Configuration of the measurement memory

Devices with measurement buffer offer the opportunity to record measured quantities and state information. Therefore, the configuration software enables menu items for the determination of values and state information which should be recorded.

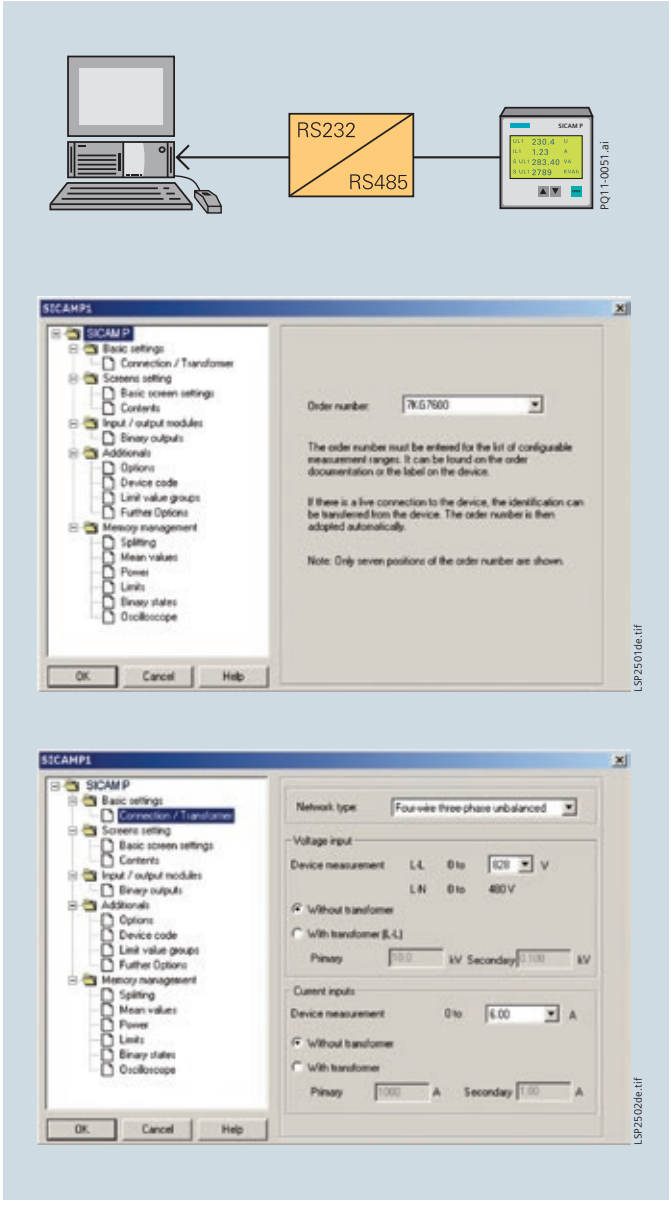

Fig. 2/6 Configuration

Memory read-out *(Fig. 2/9)*

Separate functions integrated in the configuration software enable a read-out of the following information:

- Mean values
- Mean values of power
- Oscilloscope recordings
- State information of binary channels
- Limit value violations
- Log entries.

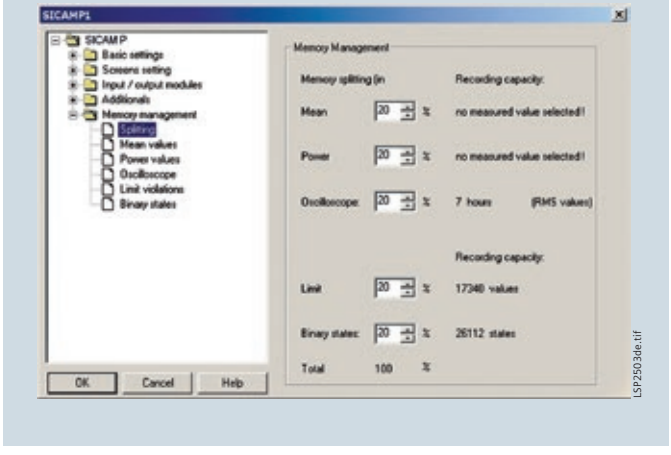

Fig. 2/7 Configuration of the measurement memory

Configuration software

Display and evaluation *(Fig. 2/8 / Fig 2/9)*
All values and information read out via the software are shown automatically in tabular and graphical form together with the time stamp on the screen.
The context menu offers some functions (masking of signals, copy, zoom, measuring functions) for easy analysis of measured values and state information.
The following measured values can be shown in graphical form:

- Mean values of voltage and current
- Mean values of power
- Oscilloscope recordings
- State information of binary channels.

The following information is shown in tabular form:

- Limit value violations
- Log entries.

Export function
The software also enables a function for the export of transmitted values and state information into an ASCII file. This ASCII file can be used in other applications, e.g. MS-Excel. Oscilloscope recordings can be exported into COMTRADE formatted files.

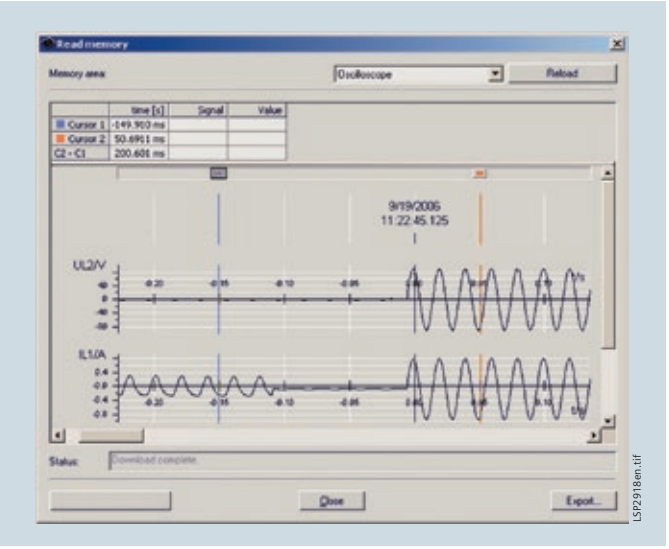

Fig. 2/8 Oscilloscope view for evaluation

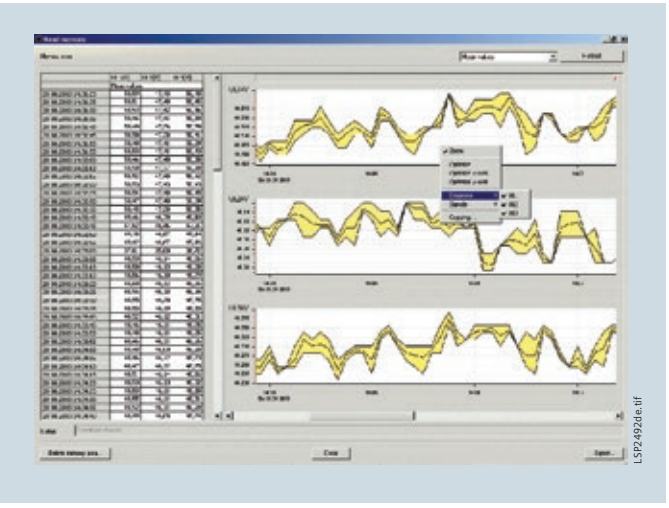

Fig. 2/9 Display and evaluation

Benefits

A properly designed and installed monitoring system with SICAM P has numerous benefits, including:

- Environment
  A better knowledge of how energy is used within a facility allows to identify an array of prospects to improve efficiency, minimize waste, and reduce energy consumption, thereby allowing the facility to be a better steward of its allotted natural resources.
- Reliability
  Assessment of data in the master station through Profibus DP, Modbus RTU/ASCII or IEC 60870-5-103 protocols from the SICAM Ps can reveal existing or imminent issues that can affect the operation and product within a facility. Historical data from power monitoring systems can help locate and optimize the productivity.
- Safety
  Monitoring systems can limit the exposure of personnel to potentially hazardous electrical environments by providing remote status and operational parameters of equipment within hazardous areas. Some monitoring devices also offer a variety of additional parameters (temperature, pressure, flow rate, vibration, status indicators, etc.) through the use of I/O modules of the SICAM P.
- Financial
  Each benefit discussed above either directly or indirectly influences a business' bottom line. In most cases, the monetary impact from even one or two benefits can quickly justify the purchase and installation of a power monitoring system with SICAM P.

Typical terminal assignments

Typical terminal assignments

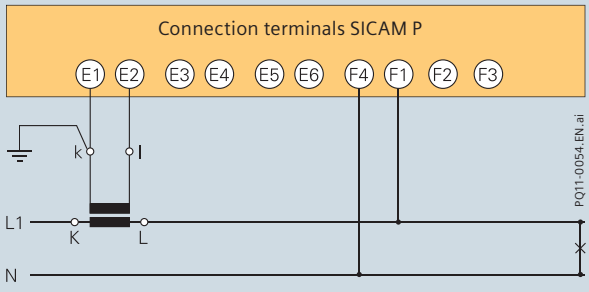

Fig. 2/10 Single-phase AC

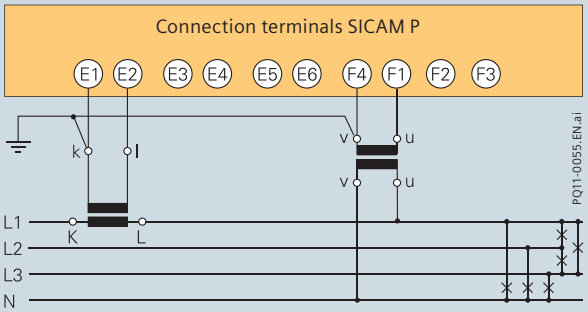

Fig. 2/11 4-wire 3-phase balanced

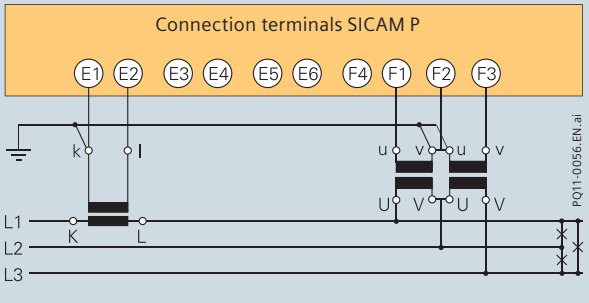

Fig. 2/12 3-wire 3-phase balanced

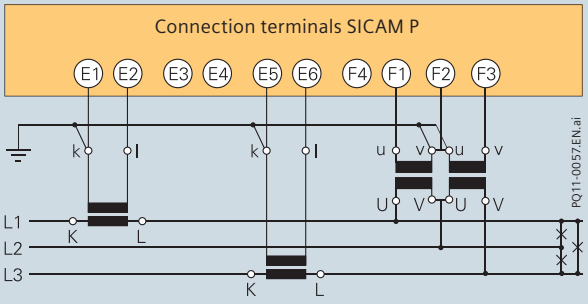

Fig. 2/13 3-wire 3-phase

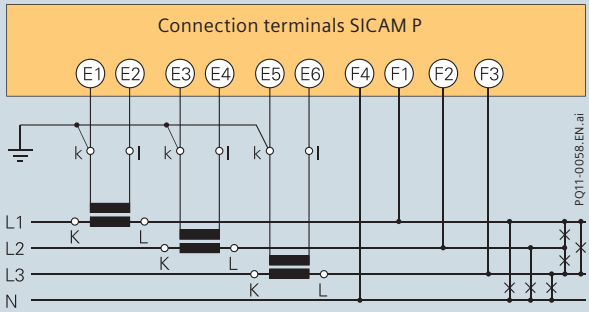

Fig. 2/14 4-wire 3-phase (low-voltage system) [1] [2]

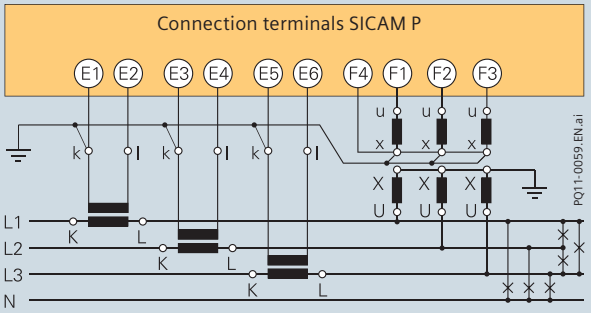

Fig. 2/15 4-wire 3-phase (high-voltage system)

The above-mentioned terminal assignments are just some configuration examples. Within the range of the permissible maximum current and voltage values, a current or voltage transformer is not compulsory.
On the other hand, Y or V-connected voltage transformers can be used.
All input or output terminals not required for measurement remain unassigned.

Remarks regarding low-voltage applications:

[1] Up to V_{LN} = 480 V, the SICAM P can be connected directly without a transformer. In three- and four-phase systems, except for three-phase systems without neutral: SICAM P can also be connected directly without a transformer up to V_{LL} = 690 V.

[2] In IT low-voltage systems, SICAM P50 has to be connected via voltage transformer to avoid false alarm of isolator monitoring.

Input	for connection to AC systems only
Max. rated system voltage	Y 400/Δ 690 V
Control range	1.2 V_{EN}/I_{EN}
Rated frequency f_{EN}	50 Hz; 60 Hz
Input frequency range f_E	±5 Hz, min >30 % V_{EN}
Waveform	sinusoidal or distorted up to the 21st harmonic
AC current input I_E	3 current inputs
Rated input current I_{EN}	1 A; 5 A
Continuous overload	10 A
Surge withstand capability	100 A for 1 s
Power consumption	83 µVA at 1 A; 2.1 mVA at 5 A
AC voltage input V_E	3 voltage inputs
Rated voltage V_{EN}	100/110 V; 190 V; 400 V; 690 V (phase-phase)
Continuous overload capacity	1.5 V_{EN}
Surge withstand capability	2.0 × V_{EN}
Input resistance	2.663 MΩ
Power consumption	120 mW (V_{LE} = 400 V)
Surge voltage category	acc. to DIN EN 61010 Part 1
V_{EN} to 400 V (phase-earth)	III
V_{EN} to 690 V (phase-phase)	II
Auxiliary power	multi-range power supply AC/DC
Rated range	24 to 250 V DC or 100 to 230 V AC
Total range	±20 % of rated range
Power consumption	
7KG775	max. 4 W or 10 VA
Binary outputs	via isolated solid-state relay
Permissible voltage	150 V AC; 150 V DC
Permissible current	100 mA continuous 300 mA for 100 s
Output resistance	50 Ω
Permissible switching frequency	10 Hz
Measurement functions	
Sampling rate	3.6 kHz
Resolution	12 bit
Battery	
7KG77	Varta CR2032, 3 V, Li-Mn or similar
Real-time clock	
Deviation	150 ppm
Communication interface	
Termination system	9-pin SUB D connector
Transmission rate	12 Mbit/sec max. with Profibus, Modbus RTU/ASCII
Transmission protocols parameterizable	RS485 internal – Profibus DP and IEC 60870-5-103 Modbus RTU/ASCII
Ambient temperature	acc. to IEC 60688
Operating temperature range	0 °C to +55 °C
Storage/transportation temperature range	– 25 °C to +70 °C
Climatic	EN 60721-3-3 rare easy dewfall
Utilization category	IR2 (environment)
Dielectric strength	
Acc. to IEC 60688	5 kV 1.2/50 µs

Table 2/3 Technical data

Unit design	
Housing construction 7KG7755	Housing for snap-on mounting on a 35 mm/1.38 in. rail according to DIN EN 50022. SICAM P55: IP41 94 × 94 × 93.6 mm / 3.7 x 3.7 x 3.69 in. (W × H × D)
Housing construction 7KG7750	Panel-mounting housing according to DIN 43700. SICAM P50: IP41 (front), IP65 (option) 96 × 96 × 76.5 mm / 3.78 in. x 3.78 in. x 3.01 in. (W × H × D)
Connector elements	Degree of protection IP20 (terminals)
Auxiliary power	Terminal for cable diameter 2.5 mm² / 0.0039 sq in.
Voltage inputs	Terminal for cable diameter 2.5 mm² / 0.0039 sq in.
Current inputs	Terminal for cable diameter 4.0 mm² / 0.0062 sq in.
Binary outputs	Terminal for cable diameter 2.5 mm² / 0.0039 sq in.
RS485 bus interface	9-pin D-Sub connector
Weight	
7KG7750/7KG7755	SICAM P50/P55: approx. 0.60 kg
with 1 I/O module	approx. 0.65 kg
Specification of analog/digital input and output modules	
	7KG775x
Analog input module	
Rated input current	0 – 20 mA DC
Output range	0 – 24 mA DC
Input impedance	50 Ω ± 0.1 %
Power consumption at I_N 0 – 24 mA	2 × 29 mW
Accuracy	0.5 % of measuring range limit
Binary input module	
Max. input voltage	150 V DC
Max. current at high level	53 mA
Current consumption at high level	1.8 mA
Low level	≤ 10 V
High level	≤ 19 V
Time lag between low-high, high-low	max. 3 ms
Analog output module	
Rated output current	0 – 20/4 – 20 mA DC
Output range	0 – 24 mA DC
Max. load impedance	250 Ω
Accuracy	typ. 0.2 %; max. 0.5 % of nominal
Binary output module	
Permissible voltage	150 V AC/150 V DC
Permissible current	100 mA
Permissible impulse current	300 mA for 100 ms
Output resistance	50 Ω
Triggering current	5 mA
Triggering power	25 mW
Permissible switching frequency	10 Hz
Relay module	
Permissible voltage	150 V AC/120 V DC
Permissible current	5 A
Min. current	1 mA at 5 V DC
Permissible power	5 A/150 V AC or 5 A/30 V DC
Output resistance	50 mΩ
Max. reaction time	10 ms
Max. drop-out time	7 ms

Dimension drawings

Dimension drawings in mm/inch

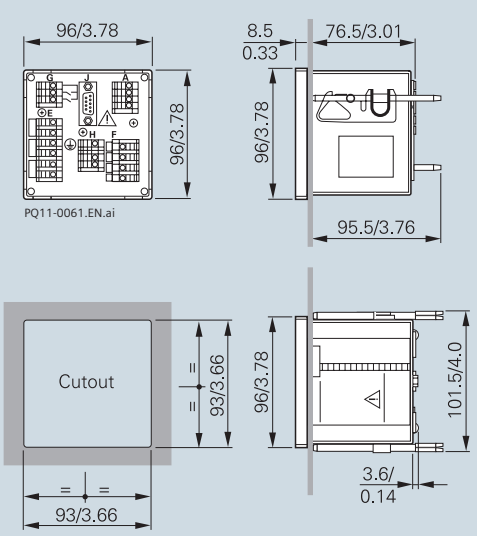

Fig. 2/16 SICAM P50 series

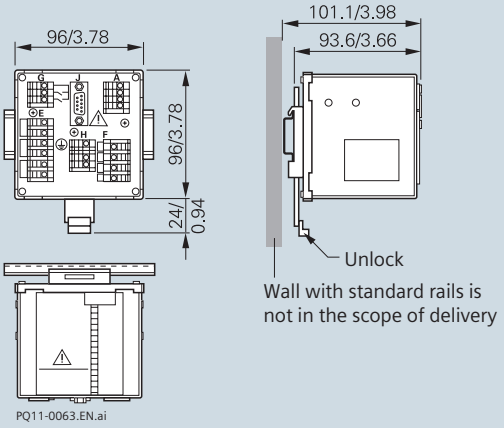

Fig. 2/17 SICAM P55 series

Description	Order No.
Power meter with display	
SICAM P50	**7KG7750-0□A0□-0AA□**
Built-in device for control panel 96 mm × 96 mm / 3.78 in. x 3.78 in., standard protocols: Profibus DP + Modbus [1]	
I/O module	
without (standard)	A
2 binary outputs	B
2 binary inputs	C
2 analog outputs (0 – 20 / 4 – 20 mA DC)	D
2 analog inputs (0 – 20 mA DC)	E
3 relay outputs	G
Degree of protection for front	
IP41 (standard)	1
IP65	3
Communication module [2]	
RS485 with Profibus DP and Modbus RTU / ASCII	0
RS485 with IEC 60870-5-103 and Modbus RTU / ASCII	1
Power meter without display	
SICAM P55	**7KG7755-0□A00-0AA□**
Snap-on rail mounting device 96 mm × 96 mm (3.78 in. x 3.78 in.), degree of protection for front IP20, standard protocols: Profibus + Modbus	
I/O module	
without (standard)	A
2 binary outputs	B
2 binary inputs	C
2 analog outputs (0 – 20 / 4 – 20 mA DC)	D
2 analog inputs (0 – 20 mA DC)	E
3 relay outputs	G
Communication module [2]	
RS485 with Profibus DP and Modbus RTU / ASCII	0
RS485 with IEC 60870-5-103 and Modbus RTU / ASCII	1
SICAM P configuration package	**7KG7050-8A□**
consisting of: – Software SICAM P Manager (for configuration, calibration of SICAM P units by means of a personal computer) – Cable connector for connecting SICAM P to a PC (length 5 m / 16.40 ft incl. RS232 / RS485 converter) – Connector PC-side: 9-pin SUB D connector, female – SICAM P side: 9-pin SUB D connector, male – Plug-in power supply unit for the converter	
Power supply	
AC 230 V / 50 Hz	A
AC 120 V / 60 Hz	B

[1] Firmware V4 comprising Modbus and IEC 60870-5-103 protocols is available for download on the Internet at www.sicam.com.

[2] Devices ordered with Profibus DP and Modbus RTU / ASC II (V3) can be upgraded to IEC 60870-5-103 and Modbus RTU / ASC II (V4) protocols.
Devices ordered IEC 60870-5-103 and Modbus RTU / ASC II (V4) cannot be upgraded to Profibus DP and Modbus RTU / ASC II (V3) protocols option.

Table 2/4 Selection and ordering data

Products – SICAM P50/P55

SIEMENS



Power Quality devices for all applications

SICAM P850
Power Monitoring Device

siemens.com/powerquality

Contents – SICAM P850

	Page
Device description	2/19
Function overview	2/20
Function overview, Setup and display	2/21
Setup and display, Data availability	2/22
Measurement system according to IEC 61000-4-30 Ed. 2 / accuracy	2/23
Connection types and connection examples	2/24
Variants and dimensions	2/26
Technical data	2/28
Technical data, selection and ordering data	2/32

Device description

SICAM P850 is a new multifunctional device and is used to collect, display and transmit measured electrical variables such as AC current, AC voltage, power types, harmonics, etc. The communications interfaces can be used to output the measurands to a PC and the control center or display them on a display.

Applications

SICAM P8505 device is used in single-phase systems, three-phase systems and four-phase systems (with neutral conductors). It is used primarily in power utilities, but also in other industrial and commercial applications.

The web server integrated into the device is used to configure the parameters and output measured values via HTML pages on a connected PC / laptop. In devices with displays, the parameters can also be configured with the function keys on the front of the device, and the measured values can be output to the display. The output variables can also be transmitted to control or other systems such as SICAM PQS V8.01 via the communications interfaces (Ethernet, e.g., IEC 61850) in the form of digital data.



Fig. 2/18 SICAM P850

Mean features

- Use in the IT, TT and TN power systems
- Ethernet communication via the Modbus TCP or IEC 61850 Edition 2 protocol; serial communication via Modbus RTU and IEC 60870-5-103 via the RS485 interface is optional
- External time synchronization via the Network Time Protocol (NTP).

SICAM P850 system view

SICAM P850 can communicate flexibly with automation systems and evaluation stations via open protocols such as IEC 61850 and Modbus TCP.

They are available directly from the device in the form of HTML pages on a connected PC.

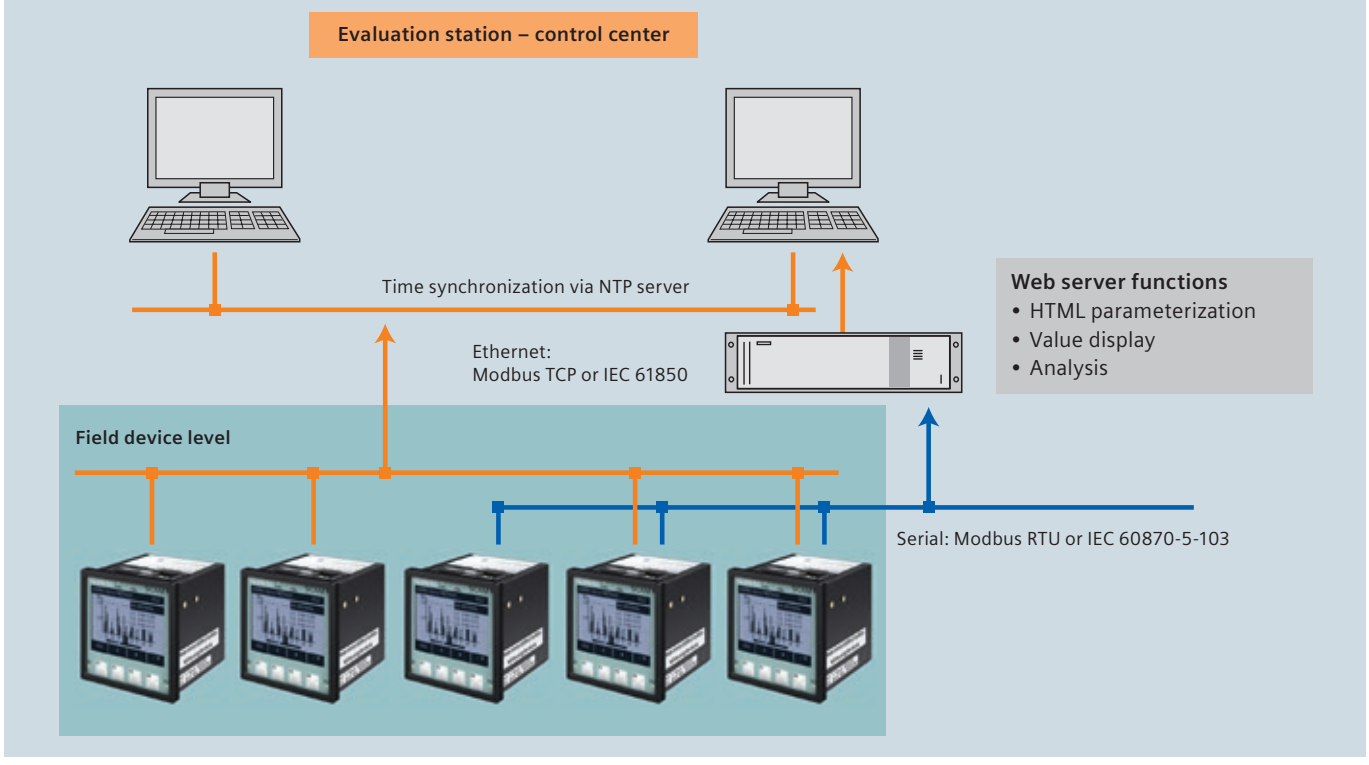

Fig. 2/19 Sample application

Function overview

Device

SICAM P850 is designed as panel flush-mounted device with a graphical display for displaying measured values and parameterization: SICAM P850 (7KG850xxx). SICAM P850 is also available as DIN rail devices without displays.

Ethernet communication uses the Modbus TCP or IEC 61850 communication protocol. Serial communication is optionally available with an RS485 interface via Modbus RTU or IEC 60870-5-103.

The front protection class is IP20 for DIN rail devices without displays. Devices for panel flush mounting with displays have protection class IP40 or IP51.

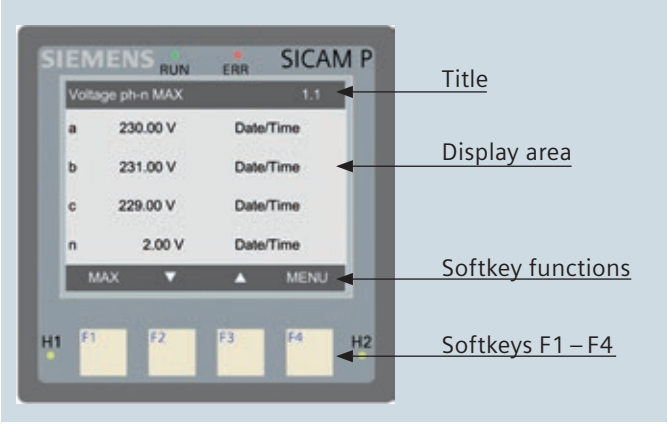

Fig. 2/20 Display and softkeys

Hardware design

SICAM P850 contains the following electrical modules, depending on the device variant:

- Digital signal processor (DSP)
- Display and softkeys
- 4 inputs for AC voltage measurements
- 3 inputs for AC current measurements
- 2 binary outputs
- Power supply
- Ethernet interface
- RS485 interface (depending on variant ordered).

Measurands

The following measurands are collected or calculated by the device from the measured variables:

- True RMS AC voltage and AC current
- 2,048 sampled values, 10 / 12 periods
- Effective value measurement (TRMS) up to 100th harmonic
- Line frequency
- Active, reactive and apparent power
- Active, reactive and apparent energy
- Power factor and active power factor
- AC voltage and AC current unbalance
- Harmonics of AC voltage and AC current are stored up to the 40th order for evaluation
- THD (Total Harmonic Distortion) of AC voltage and AC current
- Phase angle
- Flicker.

Communication

An Ethernet interface and an optional RS485 interface are available for communicating with the control center and other process automation systems. The RS485 interface supports the transmission of operating measured values, counts and messages. The Modbus RTU or IEC 60870-5-103 communication protocol can be used, depending on the device variant.

The device parameterization, transmission of measured data, counts and messages / events as well as time synchronization with the Network Time Protocol (NTP) are supported over Ethernet.

The SICAM P850 device supports the transmission of operating measured values with the two Ethernet protocol options – via both Modbus TCP and IEC 61850.

Time synchronization

The device needs to have the date and time during operation for all time-relevant processes. SICAM P850 therefore uses time synchronization while communicating with peripheral devices to guarantee a common time basis and to permit time stamping of the process data. The following types of time synchronization can be carried out:

- **Time synchronization via Ethernet NTP (preferred)**
  SICAM P850 / P855 has an SNTP client (Simple Network Time Protocol) that can be connected to two NTP servers (Network Time Protocol) for external time synchronization: the primary and secondary (redundant) NTP servers.
- **External time synchronization via the field bus**
  using the Modbus RTU or IEC 60870-5-103 communication protocol
- **Real Time Clock (RTC)**
  If external time synchronization is not possible, data can be synchronized with the time pulse of an internal clock.

LED signaling

SICAM P850 automatically monitors the functions of its hardware / firmware components. LEDs signal the current device status.

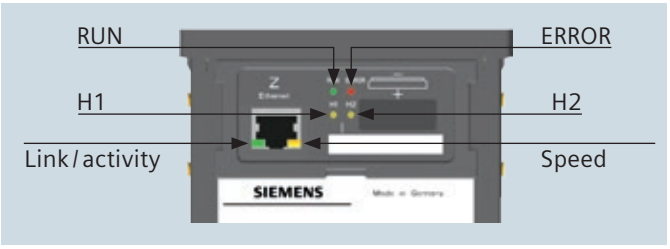

Fig. 2/21 LED indicators

Display and softkeys

All SICAM P850 models can be operated via HTML pages, using a connected PC. Devices with displays can also be operated using the function keys on the front of the display.

On panel flush-mounted devices, the front of the display accommodates four keys and four LEDs located at the bottom of the display. Of these LEDs, H1, H2 and ERROR can be parameterized. The ERROR LED can be parameterized only for error messages. Parameter settings, measured values and graphics are displayed on the screen.

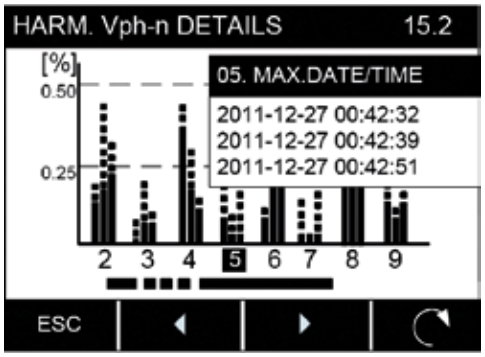

Fig. 2/22 Harmonics display

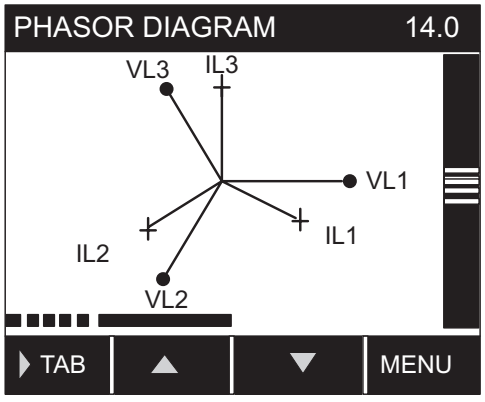

Fig. 2/23 Phasor diagram

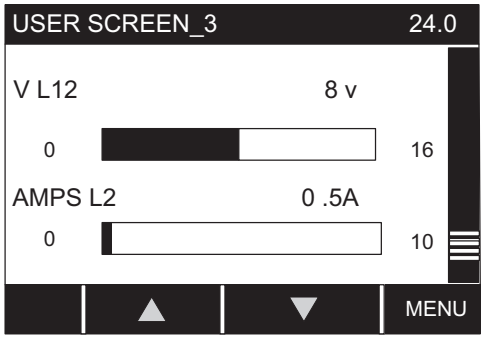

Fig. 2/24 User-defined view

Parameterization and visualization

All SICAM P850 devices are operated from a connected PC. An internal web browser with HTML pages is generally used for parameterization.

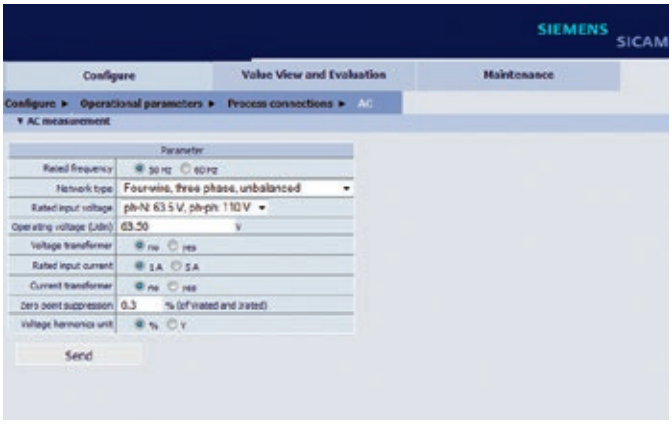

Fig. 2/25 Parameterizing the process connections

Visualizing values

Depending on which operating parameters are selected, the input / output window displays measured values with the corresponding measurement units or a tabular list that is updated every 5 seconds.

- Operating measured values
- Voltage harmonics
- Current harmonics
- Power and energy
- Binary outputs
- Limit values
- Group indications.

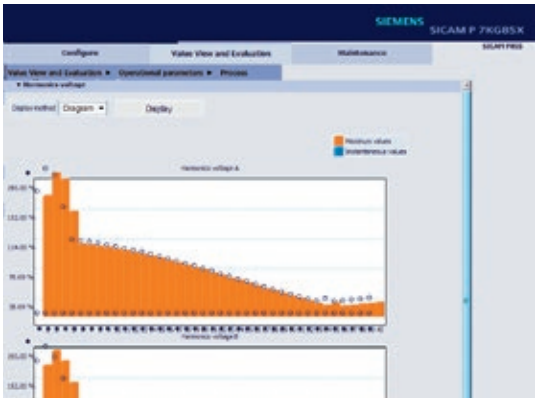

Fig. 2/26 Graphical display of harmonics

Automation functions

Upper and lower limit values can be parameterized for up to 16 measured values. Alerts can be output if these limit values are exceeded.

Setup and display, Data availability

Up to four limit value violations are output on the device via the two binary outputs as well as the H1 and H2 LEDs. In addition, all 16 limit value violations can be sent to peripheral devices via Ethernet

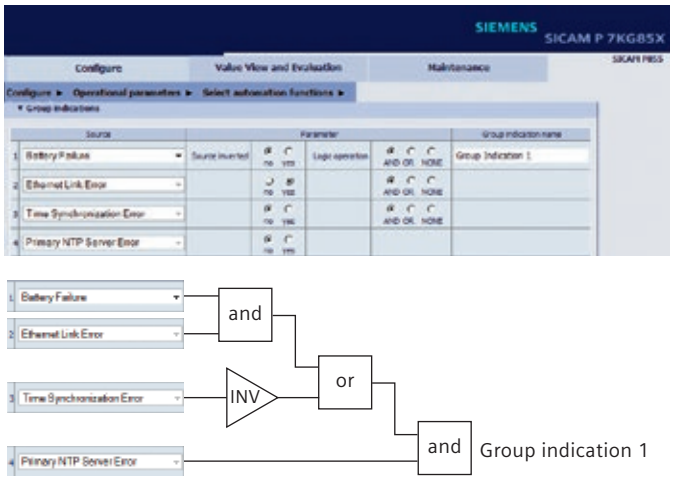

Fig. 2/27 Linking alerts to a group indication

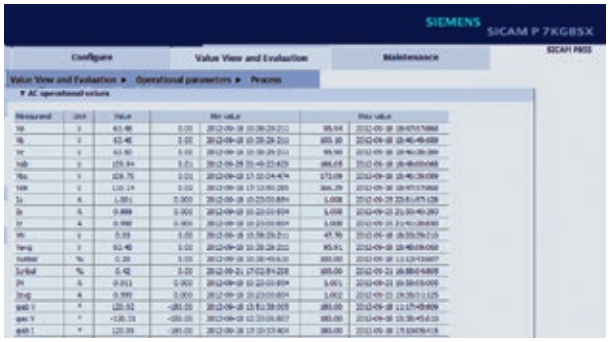

Fig. 2/28 Visualizing operating measured values

Other maintenance tasks, such as outputting operating logs and error messages as well as firmware updates, can also be carried out via the HTML pages.

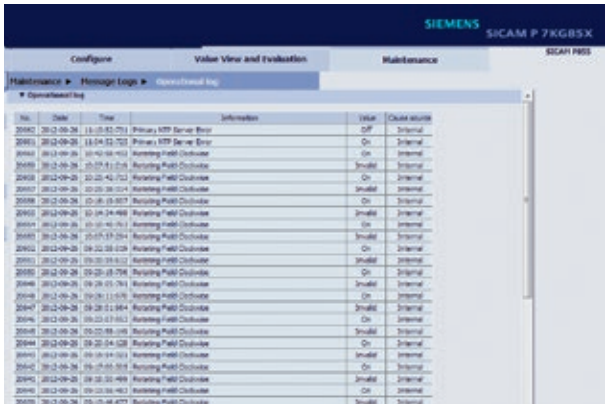

Fig. 2/29 Visualizing operating logs

Data availability of the operating measurands

	Data	Operating measured values (10/12 cycle)
	Interface	Modbus TCP, Modbus RTU, IEC 60870-5-103, IEC 61850, HTML and display
	Type	Values
AC Voltage	$U_{L1, L2, L3}$	x
	$U_{L12, 23, 31}$	x
	U_N	x
	U_{sum}	x
	U_{unsym}	x
AC Current	$I_{L1, L2, L3}$	x
	I_0	x
	I_{sum}	x
	I_{unsym}	x
Active Power Factor	cos φ (L1), (L2), (L3)	x
	cos φ	x
Power Factor	PF_{L1}, PF_{L2}, PF_{L3}	x
	PF	x
Phase Angle	$φ_{L1}$, $φ_{L2}$, $φ_{L3}$	x
	φ	x
Frequency	f (System freq.)	x
	10-s-Freq (10-Freq.)	
Harmonics, Voltage, Magnitude	H_U_{L1-x}, U_{L2-x}, U_{L3-x} (x = 1 to 40)	x
Harmonics, Current, Magnitude	H_I_{L1-x}, H_I_{L2-x}, H_I_{L3-x} (x = 1 to 40)	x
THD, Voltage	THD_U_{L1}, THD_U_{L2}, THD_U_{L3}	x
THD, Current	THD_I_{L1}, THD_I_{L2}, THD_I_{L3}	x
Active Power	P_{L1}, P_{L2}, P_{L3}	x
	P	x
Reactive Power	Q_{L1}, Q_{L2}, Q_{L3}	x
	Q	x
Apparent Power	S_{L1}, S_{L2}, S_{L3}	x
	S	x
Active Energy – Supply	WP_{L1}, WP_{L2}, WP_{L3}_Supply	x
	WP_Supply	x
Active Energy – Demand	WP_{L1}, WP_{L2}, WP_{L3}_Demand	x
	WP_Demand	x
Reactive Energy – Inductive	WQ_{L1}, WQ_{L2}, WQ_{L3}_Inductive	x
	WQ_Inductive	x
Reactive Energy – Capacitive	WQ_{L1}, WQ_{L2}, WQ_{L3}_Capacitive	x
	WQ_Capacitive	x
Apparent Energy	WS_{L1}, WS_{L2}, WS_{L3}	x
	WS	x

Table 2/5 Data availability

Functions of the measurement system

SICAM P850 is a device for measuring voltage quality according to IEC 61000-4-30 Ed. 2 and other measurands in single-phase or multi-phase supply systems. The measurement system is implemented according to Class A. In terms of functional scope, measuring ranges and accuracy, SICAM P850 is a Class S measuring device.

The basic measuring interval for determining the values of the variables (mains voltage, mains voltage harmonics and mains voltage unbalance) is a 10-period time interval for 50-Hz supply systems and a 12-period time interval for 60-Hz supply systems. The 10/12-period measurement is resynchronized to each RTC 10-minute limit.

The values for the 10/12-period time intervals are aggregated over additional time intervals.

Measurands and their operating measurement uncertainty according to IEC 62586-1

Measurands	Unit	Rated Value	Operat. measurem. uncertainty acc. to IEC 62586-1, Class S[1)]
Voltage V_{ph-ph} (delta) Acc. to parameterization	V	AC 110 V AC 190 V AC 400 V AC 690 V max. AC 600 V for UL condition	0.2 %
Voltage V_{ph-N} (star) Acc. to parameterization	V	AC 63.5 V AC 110 V AC 230 V AC 400 V max. AC 347 V for UL condition	0.2 %
Voltage V_N	V	AC 63.5 V AC 110 V AC 230 V AC 400 V max. AC 347 V for UL condition	0.2 %
Voltage unbalance V_{unbal}	%	–	0.2 %
Frequency f	Hz	50 Hz (±7,5 Hz) 60 Hz (±9 Hz)	50 mHz (see Table Accuracy of the frequency measurement)
Harmonics of voltage H_xV_{ph}	% or V	–	Condition: $V_m \geq 3\%\ V_{rated}$ Maximum error: ±5% V_m Condition: $V_m < 3\%\ V_{rated}$ Maximum error: ±0.15% V_{rated}
Short-term flicker and long-term flicker	P_{st} and P_{lt}	–	Acc. to IEC 61000-4-15/30
Current I Acc. to parameterization	A	AC 1 A AC 5 A	±0.2 %
Current unbalance I_{unbal}	%	–	±0.2 %
Active power P + demand, – supply	W	–	±0.5%, 0.2S acc. to IEC 62053-21
Reactive power Q + inductive, – capacitive	var	–	±0.5 %
Apparent power S	VA	–	±0.5 %
Power factor PF [2)]	–	–	±1 %
Active power factor cos φ [2)]	–	–	±1 %
Phase angle φ [2)]	Degree	–	±2°
Active energy WP demand	Wh	–	±0.5 %
Active energy WP supply	Wh	–	±0.5 %
Reactive energy WQ inductive	varh	–	±0.5 %
Apparent energy WS	varh	–	±0.5 %
Total harmonics distortion of voltage THD V_{ph}	%	–	±0.5 %
Total harmonics distortion of current THD I_{ph}	%	–	±0.5 %
Harmonics of current H_xI_{ph}	A	–	Condition: $I_m \geq 10\%\ I_{rated}$ Maximum error: ±5% I_m Condition: $I_m < 10\%\ I_{rated}$ Maximum error: ±0.5% I_{rated}

[1] Tolerance limits apply to the entire nominal operating range

[2] Measurement of 2 % or more of the nominal value of the apparent power within the selected measuring range

Table 2/6 Measurement uncertainty according to IEC 62586-1

Accuracy of the frequency measurement

Circuit	Accuracy
Voltage to V_{a-N}	0% to 15% V_{rated}: invalid
	15% to 30% V_{rated}: 40 mHz
	30% to 120% V_{rated}: 10 mHz
Voltage to V_{b-N}	0% to 15% V_{rated}: invalid
	15% to 30% V_{rated}: 40 mHz
	30% to 50% V_{rated}: 30 mHz
	50% to 120% V_{rated}: 20 mHz
Voltage to V_{c-N}	0% to 15% V_{rated}: invalid
	15% to 30% V_{rated}: 40 mHz
	30% to 120% V_{rated}: 10 mHz

Table 2/7 Accuracy of the frequency measurement

Connection types and connection examples

SICAM P850 in various power systems

If SICAM P850 is used in the IT, TT and TN power systems, no special operating conditions need to be observed.

Connection types

The possible connection types in SICAM P850 are:

- Single-phase system
- Three-conductor system with equal (balanced) load
- Three-conductor system with any (unbalanced) load (2 current inputs)
- Three conductor system with any (unbalanced) load (3-current inputs)
- Four-conductor system with equal (balanced) load
- Four-conductor system with any (unbalanced) load.

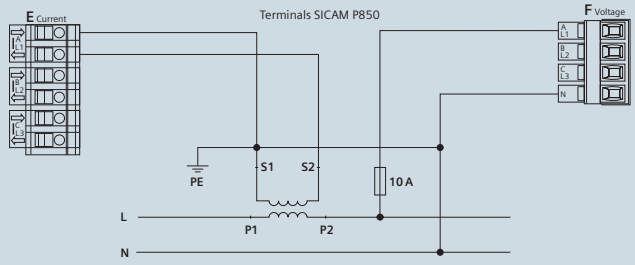

Fig. 2/30 Connection example: single-phase system, 1 voltage converter

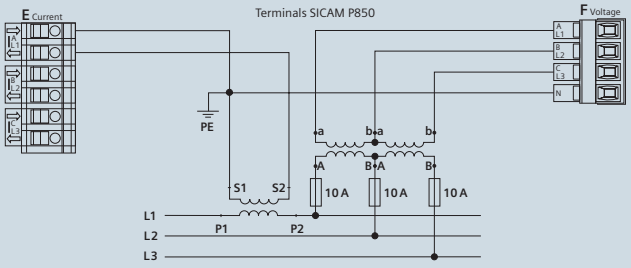

Fig. 2/31 Connection example: three-conductor system, 2 voltage converters and 1 current converter, equal load

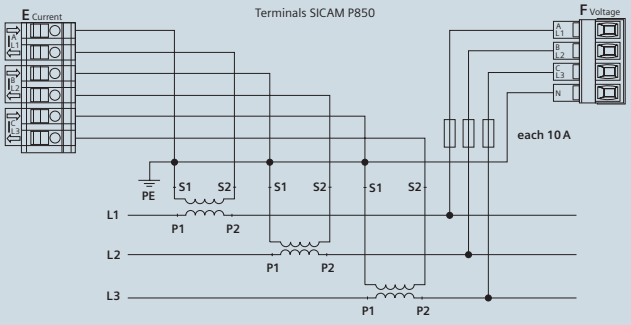

Fig. 2/32 Connection example: three-conductor system, no voltage converter and 3 current converters, any load

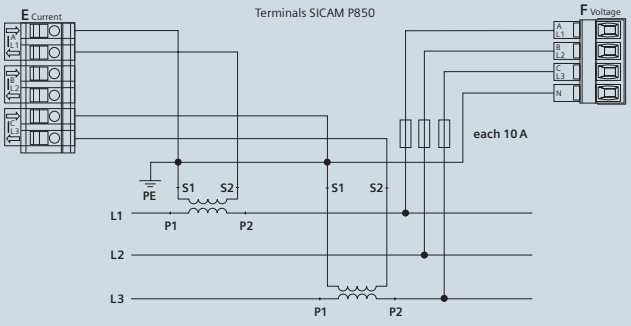

Fig. 2/33 Connection example: three-conductor system, no voltage converter and 2 current converters, any load

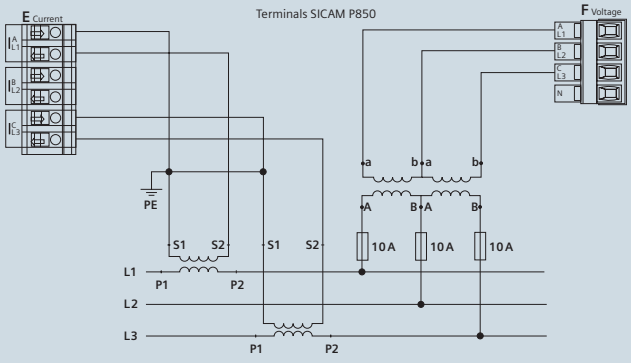

Fig. 2/34 Connection example: three-conductor system, 2 voltage converters and 2 current converters, any load

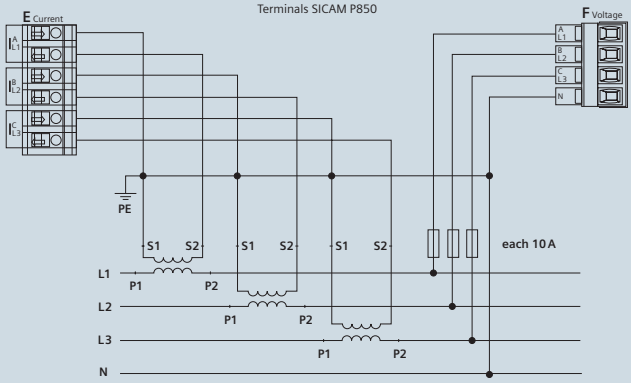

Fig. 2/35 Connection example: four-conductor system, no voltage converter and 3 current converters, any load

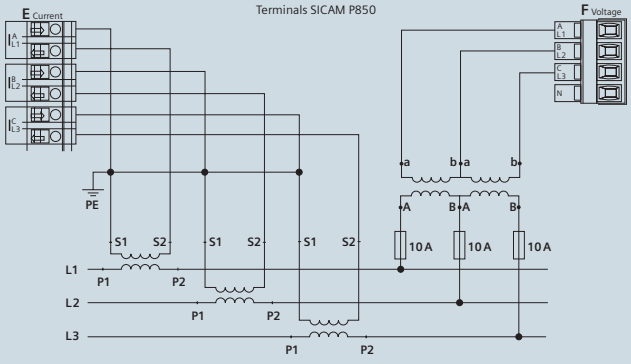

Fig. 2/36 Connection example: three-conductor system, 2 voltage converters and 3 current converters, any load

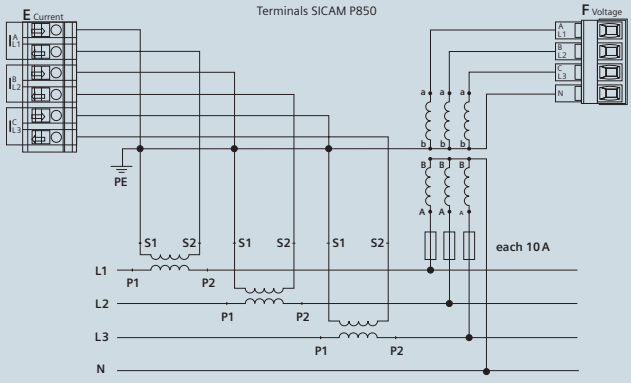

Fig. 2/37 Connection example: four-conductor system, 3 voltage converters and 3 current converters, any load

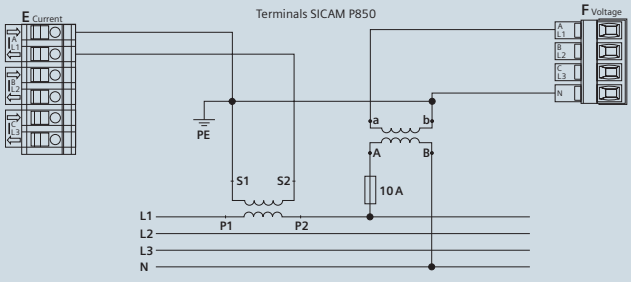

Fig. 2/38 Connection example: three-conductor system, 1 voltage converter and 1 current converter, any load

Variants and dimensions

SICAM P850 variants

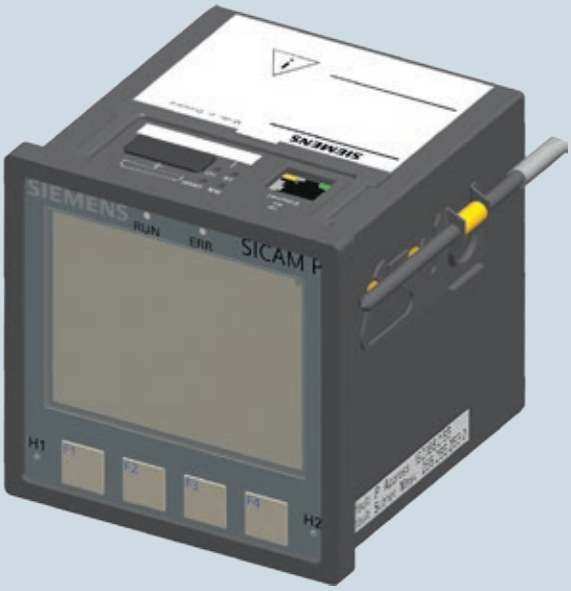

Fig. 2/39 SICAM P850 for panel flush mounting, display side



Fig. 2/40 SICAM P850 for panel flush mounting, terminal side with RS485 interface

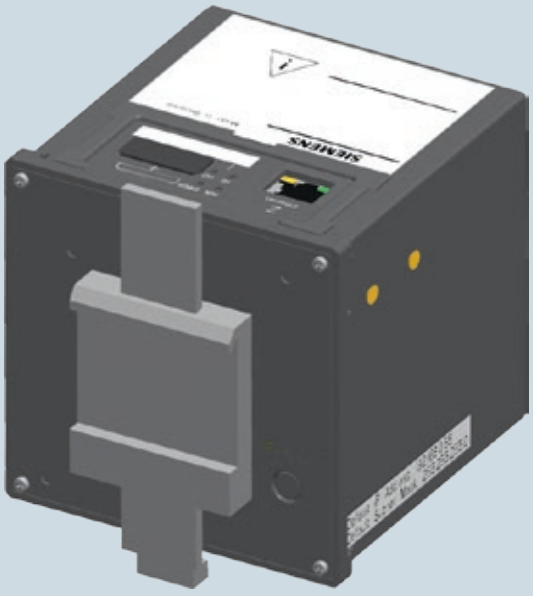

Fig. 2/41 SICAM P850 as a DIN rail device, DIN rail side



Fig. 2/42 SICAM P850 as a DIN rail device, terminal side with RS485 interface

Dimensions

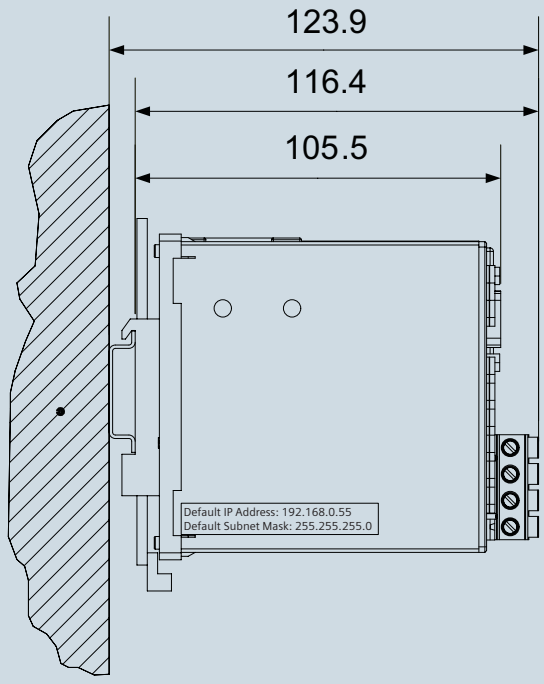

DIN rail mounting

Mass	Device without display: approx. 0.49 kg Device with display, without door: approx. 0.52 kg Device with display and door: approx. 0.6 kg

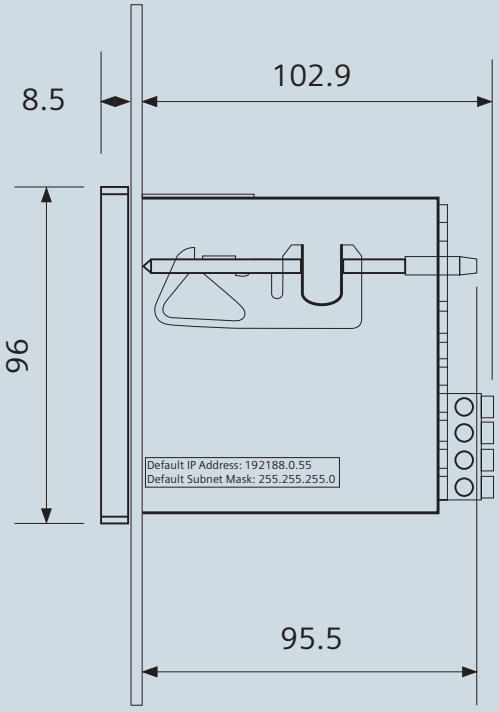

Panel flush mounting

Sectional drawing for panel flush mounting (W x H)	92 (+0.8) mm x 92 (+0.8) mm (+0.8 mm = upper limit dimension)
Dimension (W x H x D)	96 mm x 96 mm x 100 mm 3.78 inch x 3.78 inch x 3.94 inch

Fig. 2/43 Dimensions

Technical data

Power supply

Direct voltage	
Rated input voltages	24 V to 250 V
Admissible input voltage tolerance	± 20 %
Permitted ripple of the input voltage	15 %
Maximum inrush current	
At ≤ 110 V	< 15 A
At 220 V to 300 V after 250 µs:	≤ 22 A; after 250 µs: < 5 A
Maximum power consumption	3 W

Alternating voltage	
Rated input voltages	110 V to 230 V
System frequency at AC	50 Hz / 60 Hz
Admissible input voltage tolerance	± 20 %
Permitted harmonics at AC 115 V and AC 230 V	2 kHz
Maximum inrush current	
At ≤ 115 V	< 15 A
At 230 V	≤ 22 A; after 250 µs: < 5 A
Maximum power consumption	6 VA

Table 2/8 Power supply

Inputs and outputs

Inputs for alternating voltage measurements (connector block F)	
Rated input AC voltages (parameterizable)	
Phase-N / PE	63.5 V 110 V 230 V 400 V (max. 347 V for UL condition) Operating measurement uncertainty according to IEC 60688: ± 0.1%
Phase-phase	110 V 190 V 400 V 690 V (max. 600 V for UL condition) Operating measurement uncertainty IEC 60688: ± 0.1%
Maximum input AC voltage (depending on the parameterization)	1.2 x rated input AC voltage
Maximum input AC voltage	
Phase-N / PE	480 V (max. 347 V for UL condition)
Phase-phase	831 V (max. 600 V for UL condition)
Input impedances	
a, b, c to N	6.0 MΩ
a-b, b-c, c-a	6.0 MΩ
Further information about the voltage measurement inputs	
Power consumption per input for V_{rated} 400 V	38 mW
Permissible power frequency	42.5 Hz to 69.0 Hz
Measuring error (with calibration) at 23 °C ± 1 °C 50 Hz or 60 Hz	Typically 0.1% for reference conditions according to IEC 60888

Table 2/9 Inputs and outputs

Inputs for alternating current measurements (connector block E)	
Input AC currents	
Rated input current range (parameterizable)	1 A 5 A Operating measurement uncertainty according to IEC 60688 ±0.1 %
Max. input current	2x rated input AC current
Power consumption per input	
At 1 A	1 mVA
At 5 A	2.5 mVA
Further information about the current measurement inputs	
Permissible power frequency	42.5 Hz to 69.0 Hz
Max. rated input voltage	150 V
Measuring error (with calibration) at 23 °C ± 1 °C 50 Hz or 60 Hz	Typically 0.1 % at reference conditions
Thermal stability	10 A continuous 100 A for max. 1 s according to IEC 60688

Table 2/10 Inputs for alternating current measurements

Binary outputs (connector block G)	
Maximum switching voltage	
Alternating voltage	230 V
Direct voltage	250 V
Maximum currents	
Maximum pulse current for 0.1 s	300 mA
Further information about the binary outputs	
Internal impedance	35 Ω
Admissible switching frequency	10 Hz
Number of switching cycles	Unlimited

Table 2/11 Binary outputs

Communication interfaces

Ethernet (connector Z)	
Ethernet, electrical	
Connection	Device top side RJ45 connector socket 10/100 Base-T acc. to IEEE802.3 LED yellow: 10/100 Mbit/s (off/on) LED green: – flashing: active – on: not active – off: no connection
Protocols	Modbus TCP IEC 61850 Server
Voltage strength	DC 700 V
Transmission rate	10/100 MBit/s
Cable for 10/100 Base-T	100 Ω to 150 Ω STP, CAT5
Maximum cable length 10/100 Base-T	100 m, if well installed

Table 2/12 Ethernet

Serial interface (connector J), optional		
RS485		
Connection	RS485 port, terminal side, 9 pin D-Sub socket	
Protocol	Modbus RTU (optional)	IEC 60870-5-103 (optional)
Baud rate (adjustable)	Min. 1200 Bit/s Max. 115 200 Bit/s	Min. 9600 Bit/s Max. 38 400 Bit/s
Maximum distance of transmission	Max. 1 km (depending on data rate)	
Transmission level	Low: –5 V to –1.5 V High: +1.5 V to +5 V	
Reception level	Low: ≤ –0.2 V High: ≥ +0.2 V	
Bus termination	Not integrated, bus termination using plugs with integrated bus terminating resistors	

Table 2/13 Serial interface

Technical data

EMC tests for immunity (type tests)	
Standards	IEC EN 61000-6-2 For more standards see also individual functions
Electrostatic discharge, Class III IEC 61000-4-2	6 kV contact discharge; 8 kV air discharge, both polarities; 150 pF; R_i = 330 Ω with connected Ethernet cable
Radio frequency electromagnetic field, amplitude-modulated, Class III IEC 61000-4-3	10 V/m; 80 MHz to 3 GHz 80% AM; 1 kHz
Fast transient bursts, Class III IEC 61000-4-4	2 kV; 5 ns/50 ns; 5 kHz; Burst length = 15 ms; Repetition rate 300 ms; Both polarities; R_i = 50 Ω; Test duration 1 min
High energy surge voltages (SURGE), Installation Class III IEC 61000-4-5	Impulse: 1.2 µs/50 µs
Auxiliary voltage	Common mode: 2 kV; 12 Ω; 9 µF Diff. mode: 1 kV; 2 Ω; 18 µF
Measuring inputs, binary inputs and relay outputs	Common mode: 2 kV; 42 Ω; 0.5 µF Diff. mode: 1 kV; 42 Ω; 0.5 µF
HF on lines, amplitude-modulated, Class III IEC 61000-4-6	10 V; 150 kHz to 80 MHz; 80 % AM; 1 kHz
Power system frequency magnetic field IEC 61000-4-8, Class IV	30 A/m continuous; 300 A/m for 3 s
1 MHz test, Class III, IEC 61000-4-18	2.5 kV (peak); 1 MHz; τ = 15 µs; 400 surges each s; Test duration 1 min; R_i = 200 Ω

Table 2/14 EMC tests for immunity

EMC tests for electromagnetic interference (type test)	
Standard	IEC EN 61000-6-4
Radio noise voltage to lines, only auxiliary voltage IEC-CISPR 22	150 kHz to 30 MHz Limit Class A
Interference field strength IEC-CISPR 22	30 MHz to 1000 MHz Limit Class A

Table 2/15 EMC tests for electromagnetic interference

Mechanical tests

Vibration and shock stress in stationary use	
Standards	IEC 60068
Oscillation IEC 60068-2-6 test Fc	Sinusoidal 10 Hz to 60 Hz: ±0.075 mm amplitude; 60 Hz to 150 Hz: 1 g acceleration Frequency sweep rate 1 octave/min 20 cycles in 3 orthogonal axes
Shock IEC 60068-2-27 test Ea	Semi-sinusoidal 5 g acceleration, duration 11 ms, each 3 shocks in both directions of the 3 axes
Seismic Vibration IEC 60068-3-3 test Fc	Sinusoidal 1 Hz to 8 Hz: ±7.5 mm amplitude (horizontal axis) 1 Hz to 8 Hz: ±3.5 mm amplitude (vertical axis) 8 Hz to 35 Hz: 2 g acceleration (horizontal axis) 8 Hz to 35 Hz: 1 g acceleration (vertical axis) Frequency sweep 1 octave/min 1 cycle in 3 orthogonal axes

Table 2/16 Vibration and shock stress in stationary use

Vibration and shock stress during transport	
Standards	IEC 60068
Oscillation IEC 60068-2-6 test Fc	Sinusoidal 5 Hz to 8 Hz: ±7.5 mm amplitude; 8 Hz to 150 Hz: 2 g acceleration Frequency sweep 1 octave/min 20 cycles in 3 orthogonal axes
Shock IEC 60068-2-27 test Ea	Semi-sinusoidal 15 g acceleration, duration 11 ms, each 3 shocks (in both directions of the 3 axes)
Continuous Shock IEC 60068-2-29 test Eb	Semi-sinusoidal 10 g acceleration, duration 16 ms, each 1000 shocks (in both directions of the 3 axes)
Free fall IEC 60068-2-32 test Ed	0.5 m

Table 2/17 Vibration and shock stress during transport

Test data

Reference conditions according to IEC 62586-1 for determining the test data	
Ambient temperature	23 °C ± 2 °C
Relative humidity	40 % to 60 % RH
Supply voltage	V_{PS} ± 1%
Phases (3-wire network)	3
External continuous magnetic fields	DC field: ≤ 40 A/m
	AC field: ≤ 3 A/m
DC components V/I	none
Signal waveform	sinus
Frequency	50 Hz ± 0,5 Hz
	60 Hz ± 0,5 Hz
Voltage magnitude	V_{din} ± 1 %
Flicker	P_{st} < 0.1 %
Unbalance (all channels)	100% ± 0.5 % of V_{din}
Harmonic	0 % to 3 % of V_{din}
Interharmonic	0 % to 0.5 % of V_{din}

Electrical tests

Standards	
Standards	IEC EN 61000-6-2 IEC EN 61000-6-4 IEC EN 61010-1 IEC EN 61010-2-030

Insulation test according to IEC 61010-1 and IEC EN 61010-2-030				
Inputs/Outputs	**Insulation**	**Rated Voltage**	**ISO Test Voltage**	**Category**
Current measuring inputs	Reinforced	150 V	AC 2.3 kV	Cat. III
Voltage measuring inputs	Reinforced	480 V	Surge voltage 9.76 kV	Cat. III
Supply voltage	Reinforced	300 V	DC 3,125 kV	Cat. III
Binary outputs	Reinforced	300 V	AC 3.536 kV	Cat. III
Ethernet interface	Function	< 50 V	DC 700 V	Cat. III
RS485 interface	Function	< 50 V	DC 700 V	Cat. III

Environmental conditions

Temperature data	
Operating temperature Devices with display: the legibility of the display is impaired at temperatures < 0 °C (+32 °F)	–25 °C to +55 °C
Temperature during transport	–40 °C to +70 °C
Temperature during storage	–40 °C to +70 °C
Maximum temperature gradient	20 K/h

Air humidity data	
Mean relative air humidity per year	≤ 75 %
Maximum relative air humidity	95 %, 30 days a year
Condensation during operation	Not permitted
Condensation during transport and storage	Permitted

Altitude	
Max. altitude above sea level	2000 m

General data

Battery	
Type	PANASONIC CR2032 VARTA 6032 101 501
Voltage	3 V
Capacity	230 mAh
Typical life	For operation with permanently applied supply voltage: 10 years
	For operation with sporadically interrupted supply voltage: a total of 2 months over a 10-year period

DIN rail housing	IP20
Panel flush mounting (front)	IP40 (with display, without door) IP51 (with display and door)
Terminals	IP2x

Climate stress tests

Standards: IEC 60068
Dry cold: IEC 60068-2-1 test Ad
Dry heat during operation, storage and transport: IEC 60068-2-2 test Bd
Damp heat: IEC 60068-2-78 test Ca
Change of temperature: IEC 60068-2-14 test Na and Nb

Safety standards

Standards: IEC EN 61010
IEC EN 61010-1, IEC EN 61010-2-30

Table 2/18 Further technical data

Technical data, selection and ordering data

Technical data

Please refer to the manual for the technical data for SICAM P850.

Description	Order No.
Multifunctional Power Meter	
SICAM P850	**7KG850□-0AA□□-□AA0**
Device type	
Dimensions 96 mm x 96 mm x 100 mm / 3.78 in. x 3.78 in. x 3.94 in. (W x H x D) 4 Inputs for AC voltage measurements 3 Inputs for AC current measurements 2 Binary outputs Galvanic isolated voltage measurement inputs web server for parameterization and visualization, and data management Measurements according to standard IEC 61000-4-30, Class S	
Measurement functions	
Basic measurements: V, I, f, P (class 0.2S), Q, S, cos φ, limit violations, energy measurements measurements till 40th harmonics Transmission measurement values via communication protocols	0
Housing	
Snap-on mounting unit without graphical display	0
Panel-mounted instrument with graphical display	1
Serial Communication Interface	
Without	0
RS485 – Modbus RTU	1
RS485 – IEC 60870-5-103 and Modbus RTU	3
Front protection class	
IP20 (Position 7 = 0)	0
IP40 (Position 7 = 1)	1
IP51 (Position 7 = 2)	2
Ethernet Interface and Communication protocol, RJ45	
Modbus TCP	0
Modbus TCP and IEC 61850 Server	2

Table 2/19 Selection and ordering data

SIEMENS



Power Quality devices for all applications

SICAM MMU
Measurement and Monitoring Unit

siemens.com/powerquality

Contents – SICAM MMU

	Page
Device description	2/35
Device description, application example	2/37
Specific functions and design	2/38
Measurands	2/39
Connection types	2/40
Graphical user interface	2/41
Technical data	2/43
Connection diagram, dimension drawings	2/45
Selection and ordering data	2/46
Disclaimer of liability	2/47

Device description

SICAM MMU (Measurement and Monitoring Unit) is a power monitoring device that allows the measuring of electrical quantities in electrical networks in a single unit.
In industries, power plants and substations, the SICAM MMU is applied to measure and calculate parameters e.g., current, voltage, power, phase angle, harmonics and unbalance, energy or frequency, and assign them – for further processing and visualization – to control centers (SCADA, DMS, EMS, etc.) through IEC 60870-5-104 protocol or automation systems through Modbus TCP protocol.

Device type

- Top-hat rail mounted device
- Plastic case 96 mm × 96 mm × 100 mm / 3.78 in. x 3.78 in. x 3.94 in. (W × H × D)
- Degree of protection IP20.

Supply voltage

- DC 24 – 250 V
- AC 110 – 230 V, 45 – 65 Hz.

Input and output circuits

- 4 inputs for alternating voltage measurements
- 3 inputs for alternating current measurements up to 10 A continuous
- 2 individually parameterizable binary outputs
- 6 binary inputs and 6 binary outputs with SICAM I/O Unit expandable.

Signalization LEDs

Automatically monitor the functions of its hardware, software and firmware components.

Communication

- Ethernet: IEC 60870-5-104 or Modbus TCP communication protocol. IEC 60870-5-104 can be executed redundantly.

Measurands

The following measurands can be recorded or calculated from the measured quantities:

- Unbalance of alternating voltage and alternating current
- TRMS (True RMS) for alternating voltage and current
- Active, reactive and apparent power
- Active, reactive and apparent energy
- Power frequency
- Phase angle
- Angle between phase-to-ground voltage L1-L2 and L1-L3
- Power factor and active power factor
- Voltage and current till 21st
  – Mean value of the 3-phase voltages: V_{avg}
  – Mean value of the 3-phase currents: I_{avg}.

Time synchronization

For a common time basis when communicating with peripheral devices and time stamping of the process data.

- External time synchronization via Ethernet NTP
- Internal time synchronization via RTC (if external time synchronization is not available).



Fig. 2/44 SICAM MMU (Measurement and Monitoring Unit)

Applications

- Support the integration of online measurement into control center and substation automation, protection via protocols IEC 60870-5-104 or Modbus TCP, e.g. for voltage and load levels control
- Monitoring of transformers and decentralized power generation
- Alarming and notification of limit violations via protocol or binary outputs
- Basic power quality profile monitoring (voltage, frequency, harmonics and unbalance)
- Option for supporting all power systems IT, TT and TN.

Main features

- Design: Compact and robust for flexible application in industrial and utility environments
- Connections in 1-phase systems, as well as in 3-wire and 4-wire systems
- Applications: in power utilities, industrial and commercial sector applications
- Measurements: more than 100 measured or calculated values available
- Temperature range: –25 °C to +55 °C / –13 °F to 131 °F
- Measuring accuracy: 0.1 % deviation for voltage and current at rated input acc. to IEC 60688, and 0.2 s acc. to IEC 62053-21
- High EMC immunity: according to standards EN 61000-6-2 and EN 61000-6-4 for the EMC directives, and according to standard EN 61010-1 for the low-voltage directive
- UL Certfication: This product is UL-certified to standard UL 61010-1.
- KEMA certification – IEC 60870-5-104 de.2 (IS2006).

Highlights

- Flexible current measurement range (up to 2 × In)
- 2 individual binary outputs for fast switching, indications (e.g., limit violation) and operation status monitoring
- 4 LEDs for local status visualization
- Ethernet communications via IEC 60870-5-104 (if required redundantly executable) or Modbus TCP protocols

Device description

Highlights (cont.)

- Internal battery for real time clock and saving of energy counter values in case of a power outage
- User-friendly operation through web server (no extra software for parameterization needed, no converters and extra cables)
- Real time clock (RTC), field bus synchronization or network synchronization possible via NTP
- Transmission of energy points via IEC 60870-5-104 protocoll
- Extension of I/Os using the SICAM I/O Unit as sub-device via the Ethernet interface.

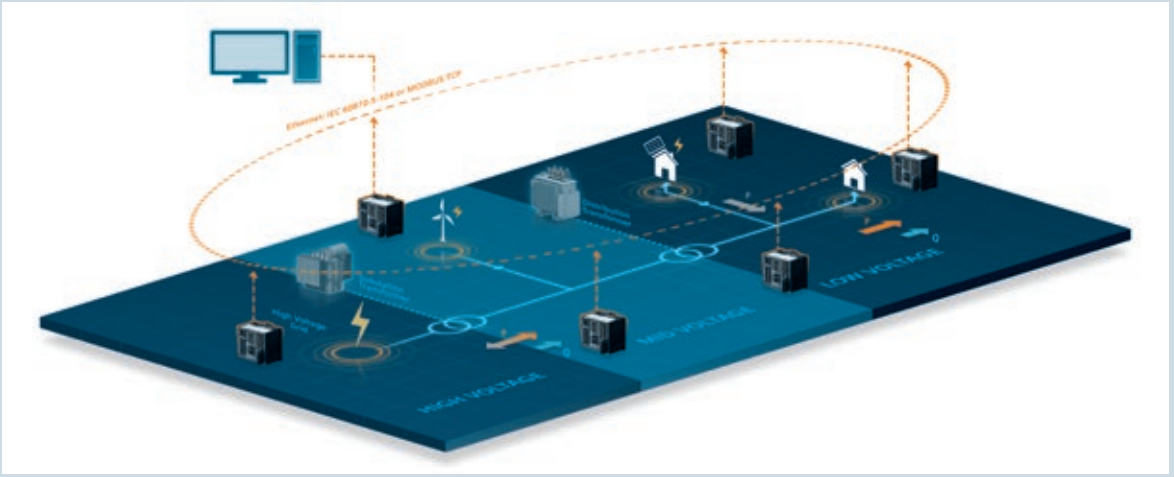

Fig. 2/45 Higher network reliability through wide area monitoring

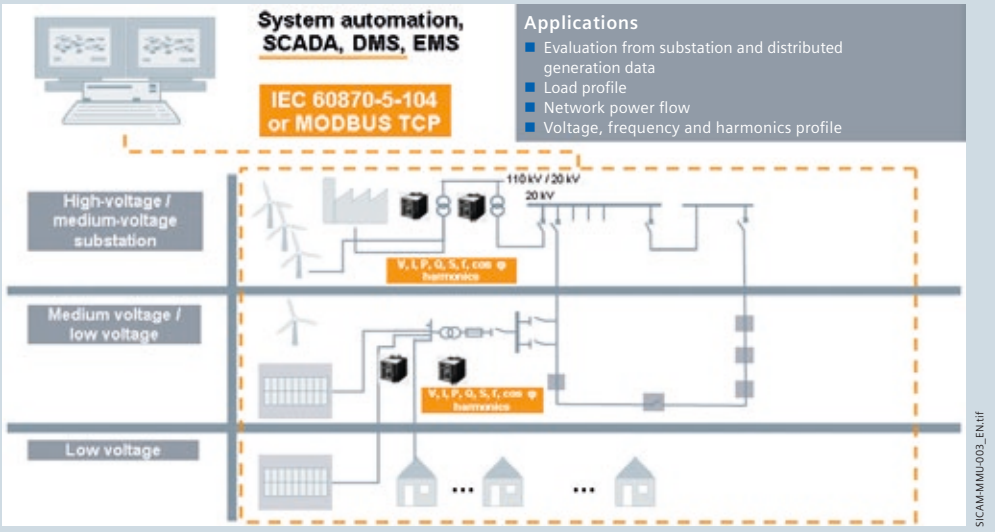

Fig. 2/46 Wide application in all voltage levels

Application area		Voltage	Current	Power	Frequency	Phase angle	Harmonics	Energy	Alarm	Internal cost allocation
Generation and distributed generation	Generator / upstream transformer	■	■	■	■	■	■	■	■	
Transmission substation	Incoming line	■	■	■						
	Outgoing line	■	■	■						
Transformer substation	Incoming line	■								
	Busbar	■	■	■	■			■		
	Feeder	■	■	■	■			■		
Transformer distribution	Incoming line	■	■	■	■		■	■		
	Busbar	■								
	Feeder	■	■	■	■	■		■	■	
Process	SCADA / EMS / DMS	■	■	■	■	■	■	■		
	Energy management	■	■	■	■	■	■	■	■	■
	Motors	■	■	■	■	■	■		■	■
	Commercial (e.g. air conditioning)	■	■	■					■	■

Table 2/20 Range of application

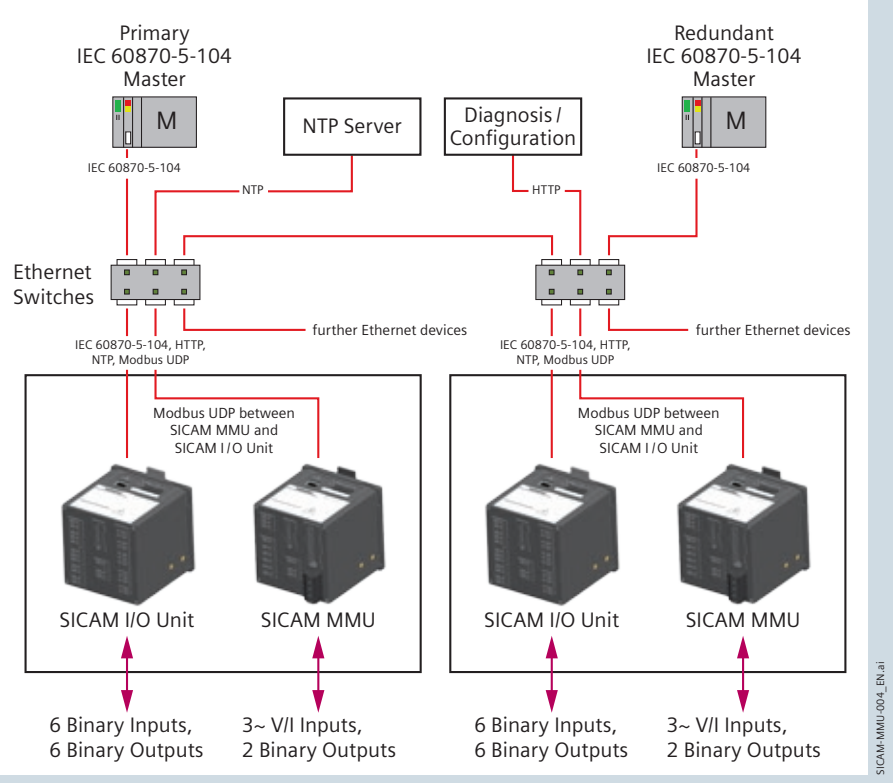

Fig. 2/47 Application example MMU

Specific functions and design

Measurement process and connections

The measurements are obtained from the alternating quantities of current and voltage supplied to the different measuring inputs. Rated input alternating voltages up to $V_{ph\text{-}N}$ = 400 V and $V_{ph\text{-}ph}$ = 690 V can be fed in using internal resistive input voltage dividers.
The internal current transformers process rated input alternating currents up to 5 A. The circuits connected on the input side are isolated galvanically from the current transformers to ensure that the potential is decoupled. The input values are processed and then output as analog values or digital data by the corresponding interfaces, converted into direct currents and / or direct voltages depending on the parameter settings, or transmitted to peripheral devices for analysis.

Communication

To communicate with the control system and other process automation equipment, the device features an Ethernet interface. Ethernet supports the device parameterization, the transmission of measured data, metered values and indications, and the time synchronization via NTP. The communication protocols are HTTP, IEC 60870-5-104 and Modbus TCP.

Time synchronization

The following types of time synchronization can be executed:
- External time synchronization via Ethernet NTP
- Internal time synchronization via RTC with quartz oscillator (if external time synchronization is not available).

Electrical assembly

SICAM MMU contains the following electrical modules depending on the device version:
- Digital signal processor (DSP)
- 4 inputs for AC voltage measurements
- 3 inputs for AC current measurements
- 2 binary outputs
- Supply voltage
- Ethernet interface (standard).

Mechanical design

The electrical modules are installed in a plastic case with the dimensions 96 mm × 96 mm × 100 mm / 3.78 in. x 3.78 in. x 3.94 in. (W × H × D). The case is prepared for mounting on a top-hat rail.
The top side of the device accommodates the RJ45 Ethernet connector with two LEDs and four additional LEDs.

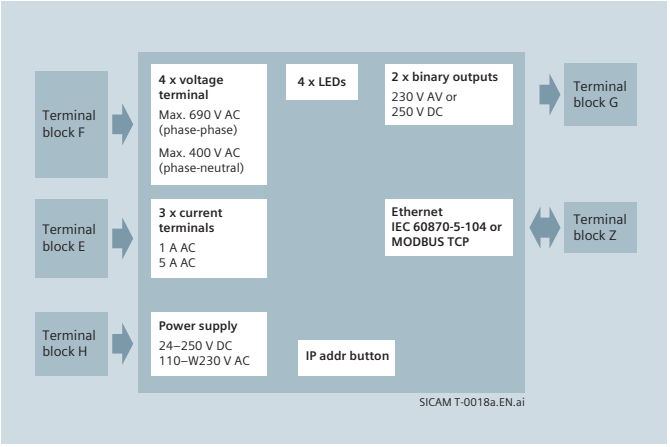

Fig. 2/48 Block diagram SICAM MMU

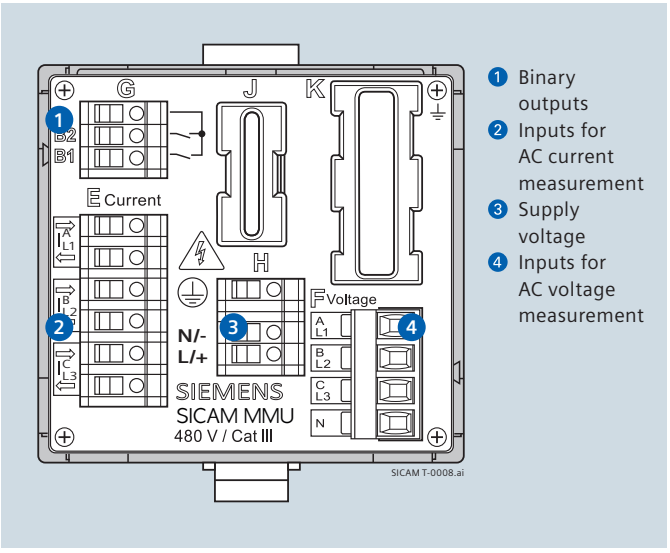

Fig. 2/49 Connections on the device

Measurand		Circuit	1-phase system	3-wire network (delta)			4-wire network (star)	
				balanced (1I)	unbalanced (3I)	unbalanced (2I)	balanced (1I)	unbalanced (3I)
AC voltage	V_a	a-N	■				■	■
	V_b	b-N						■
	V_c	c-N						■
	V_{ab}, V_{bc}, V_{ca}	a-b, b-c, c-a		■	■	■		■
	V_N	a, b, c						■
	V_{avg}	a, b, c		$\Sigma V_{ph}/3$	$\Sigma V_{ph}/3$	$\Sigma V_{ph}/3$	a-N	$\Sigma V_{ph}/3$
	V_{unbal}	a-b, b-c, c-a		■	■	■		■
AC current	I_a	a	■	■	■	■	■	■
	I_b, I_c	b, c			■	■		■
	I_N	a, b, c			■			■
	I_{avg}	a, b, c			■	■		$\Sigma I_{ph}/3$
	I_{unbal}	a, b, c			■	■		■
Active power factor	cos φ (a)	a	■					■
	cos φ (b), cos φ (c)	b, c						■
	cos φ	a, b, c		■	■	■	■	■
Power factor	PF_a	a	■					■
	PF_b, PF_c	b, c						■
	PF	a, b, c		■	■	■	■	■
Phase angle	φ_a	a	■					■
	φ_b, φ_c	b, c						■
	φ	a, b, c		■	■	■	■	■
Angle between the phase-ground voltages	φ_{ab}	a-b						■
	φ_{ac}	a-c						■
Frequency	f	a, b, c	■	■	■	■	■	■
Active power	P_a	a	■					■
	P_b, P_c	b, c						■
	P	a, b, c		■	■	■	■	■
Reactive power	Q_a	a	■					■
	Q_b, Q_c	b, c						■
	Q	a, b, c		■	■	■	■	■
Apparent power	S_a	a	■					■
	S_b, S_c	b, c						■
	S	a, b, c		■	■	■	■	■
Active energy – supply	$WP_{a\ supply}$	a	■					■
	$WP_{b\ supply}$, $WP_{c\ supply}$	b, c						■
	WP_{supply}	a, b, c		■	■	■	■	■
Active energy – demand	$WP_{a\ demand}$	a	■					■
	$WP_{b\ demand}$, $WP_{c\ demand}$	b, c						■
	WP_{demand}	a, b, c		■	■	■	■	■
Reactive energy – inductive	$WQ_{a\ inductive}$	a	■					■
	$WQ_{b\ inductive}$, $WQ_{c\ inductive}$	b, c						■
	$WQ_{inductive}$	a, b, c		■	■	■	■	■
Reactive energy – capacitive	$WQ_{a\ capacitive}$	a	■					■
	$WQ_{b\ capacitive}$, $WQ_{c\ capacitive}$	b, c						■
	$WQ_{capacitive}$	a, b, c		■	■	■	■	■
Apparent energy	WS_a	a	■					■
	WS_b, WS_c	b, c						■
	WS	a, b, c		■	■	■	■	■
Harmonics voltage	HV_a	a-N	■				■	■
	HV_b	b-N						■
	HV_c	c-N						■
Harmonics current	HI_a	a	■	■	■	■	■	■
	HI_b	b			■	■		■
	HI_c	c			■	■		■

Table 2/21 Measurands according to the connection type: Power measurands in power systems

Connection types

Connection types
SICAM MMU 7KG9663 supports the following connection types:

- 1-phase system
- 3-wire network (balanced)
- 3-wire network (unbalanced), 2 current inputs
- 3-wire network (unbalanced), 3 current inputs
- 4-wire network (balanced)
- 4-wire network (unbalanced).

1-phase system, no voltage transformer

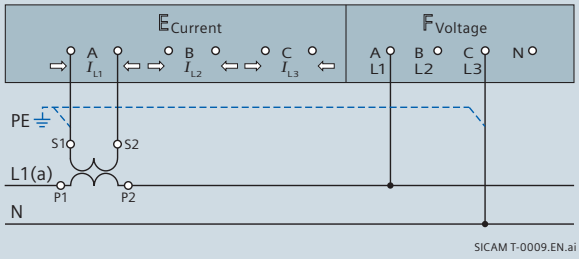

4-wire network, 1 voltage transformer and 1 current transformer, balanced

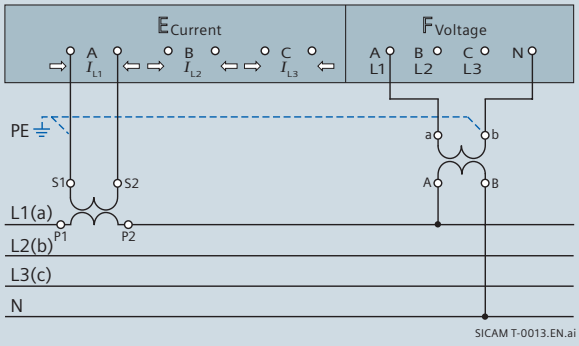

3-wire network, 2 voltage transformers and 1 current transformer, balanced*

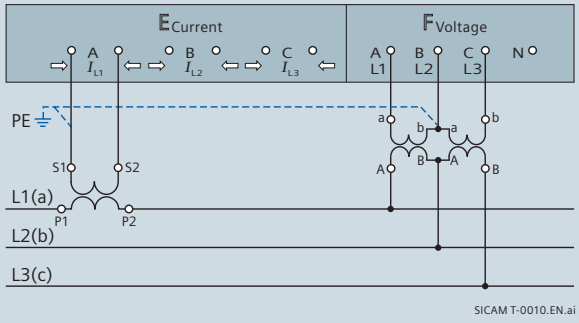

4-wire network, no voltage transformer and 3 current transformers, unbalanced

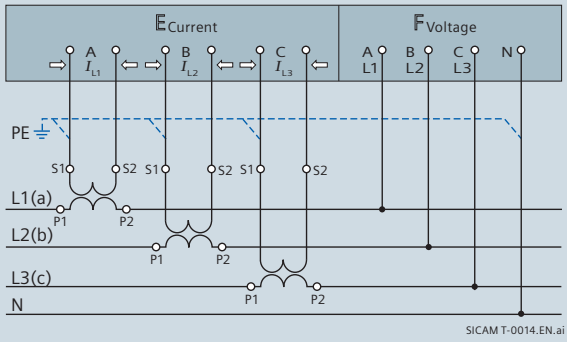

3-wire network, 2 voltage transformers and 3 current transformers, unbalanced*

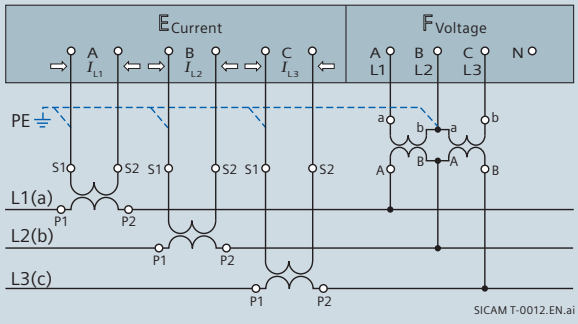

4-wire network, 3 voltage transformers and 3 current transformers, unbalanced

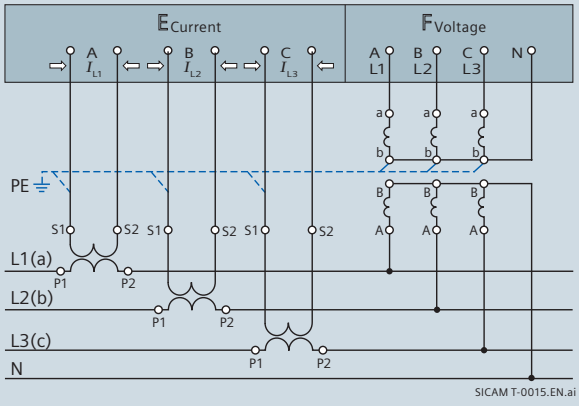

* **Important:** The maximum secondary voltage for this connection example is 480 V AC. The maximum allowable voltage between phase and ground must not be exceeded. For IT network connection, please read carefully the devices manual for detailed description.

Fig. 2/50 Connection types

Graphical user interface

Parameterization and monitoring software

The device is configured from a connected PC or notebook only.
The user interface SICAM MMU GUI (GUI = Graphical User Interface) is implemented in the device, meaning that for the whole operation and parameterization of the device no additional software is required. It is possible to navigate through the Microsoft Internet Explorer using the icons on the toolbar.
Device status, communication, parameterization, log files, measured values and maintenance can be easily processed through SICAM MMU GUI interface.

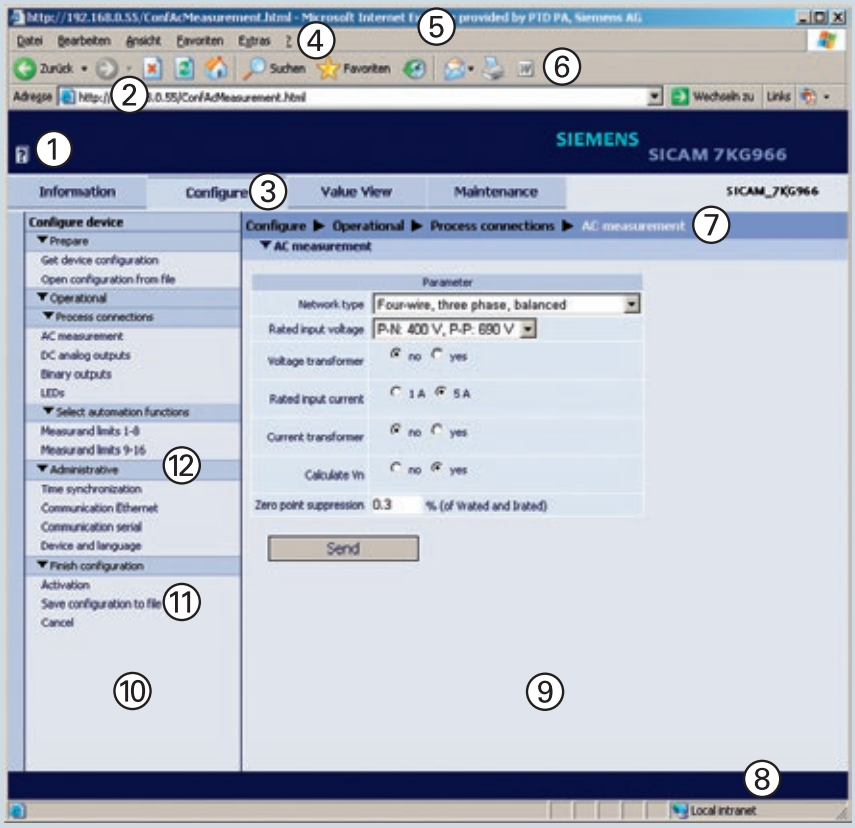

① Online help
② Address bar
③ Tab
④ Menu bar
⑤ Microsoft Internet Explorer
⑥ Toolbar
⑦ Navigation bar
⑧ Status bar
⑨ Input / output window
⑩ Navigation window
⑪ Element
⑫ Menu

Fig. 2/51 Layout of the SICAM MMU GUI user interface

Information

The navigation window of the "Information" tab contains the device information, as well as operative and device logs. It offers the complete overview of the device status.

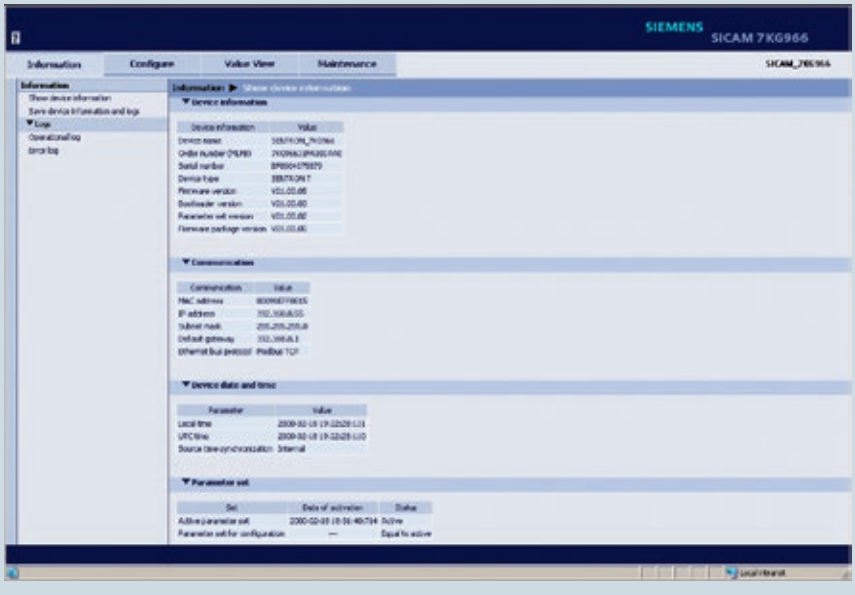

Fig. 2/52 Information tab, shows device information input / output window

Graphical user interface

Configuration

The configuration mode allows to set the device parameters. It is possible to tailor the process connections to the installation environment, specify the limits of the measuring ranges, parameterize the communication, and make various operational settings.

Value View

The measured values are displayed in the "Value View" tab.

- AC operational values
- AC power and energy
- DC analog outputs
- Binary outputs
- Measurand limits.

Depending on which operational parameters are selected, the input / output window displays the measured values of the measurands with the corresponding unit or indications in a tabular list that is updated every 5 s.

Maintenance

The "Maintenance" tab allows to update the firmware, perform calibration, make various presettings, view and delete logs, and analyze protocol-specific communication data.

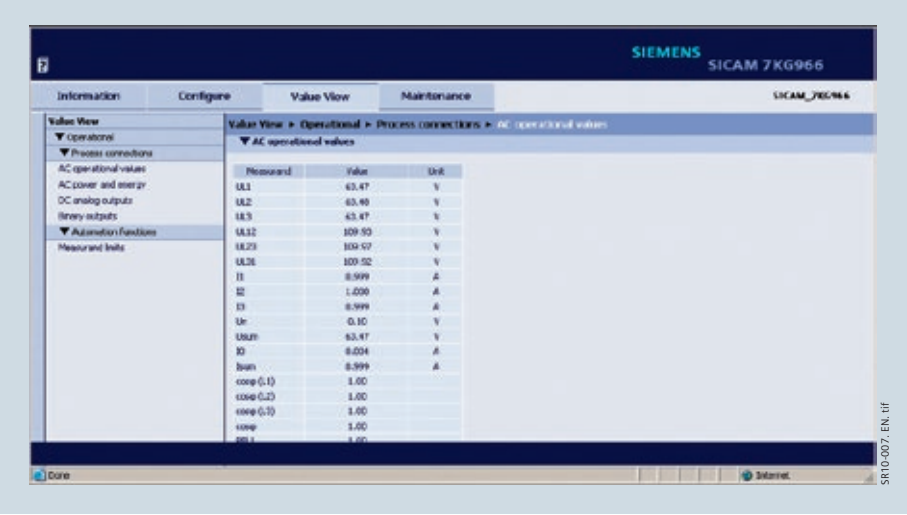

Fig. 2/53 Value View tab

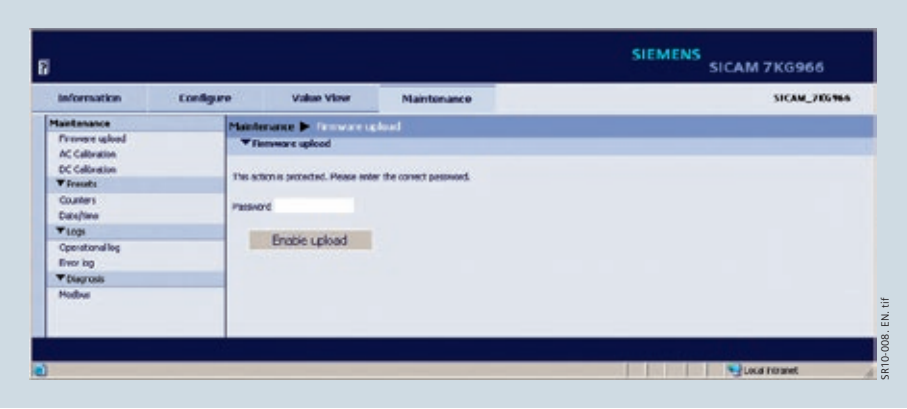

Fig. 2/54 Maintenance tab

Electrical data / inputs

Electrical data / inputs	
Rated input voltage (selectable via parameter)	ph-N: 63.5 V AC, ph-ph: 110 V AC ph-N: 110 V AC, ph-ph: 190 V AC ph-N: 230 V AC, ph-ph: 400 V AC ph-N: 400 V AC (max. 347 V at UL) ph-ph: 690 V AC (max. 600 V at UL)
Max. input voltage	1.2 × rated input voltage
Max. supply voltage phase-N / PE phase-phase	480 V 831 V
Power consumption per input for V_{rated} 400 V AC	38 mW
Permissible power frequency	45 Hz to 65 Hz
Input impedances a, b, c to N a, b, c, N to PE a-b, b-c, c-a	7,9 mΩ 3,9 mΩ 7,9 mΩ
Measuring error (with calibration) at 23 °C ±1 °C; 50 Hz or 60 Hz	typically 0.2 % at rated input voltage
Continuous overload capacity	1.5 × rated input voltage (600 V)
Surge overload capacity	2 × rated input voltage (800 V) according to IEC 60255-27

Inputs for alternating current measurements	
Rated input current ranges (selectable via parameter)	1 A, 5 A
Max. input current	2 x rated input current
Max. rated input voltage	150 V
Power consumption per input at 1 A AC at 5 A AC	 1 mVA 2.5 mVA
Permissible power frequency	45 Hz to 65 Hz
Measuring error (with calibration) at 23 °C ±1 °C; 50 Hz or 60 Hz	typically 0.2 % at rated input current
Thermal stability	10 A continuous 100 A for max. 1 s according to IEC 60688

Binary outputs	
Maximum switching voltage	
Alternating voltage	230 V
Direct voltage	250 V
Maximum continuous contact current	100 mA
Maximum pulse current for 0.1 s	300 mA
Internal impedance	35 Ω
Admissible switching frequency	10 Hz
Number of switching cycles	unlimited

Tolerance limits

Measurands	Unit	Rated value	Operat. measurem. uncertainty	
			acc. to IEC 61557-12	acc. to IEC 60688 [1]
Voltage V_{ph-ph} (delta) acc. to parameterization	V	AC 110 V AC 190 V AC 400 V AC 690 V (max. 600 V AC for UL)	±0.2 %	±0.1 %
Voltage V_{ph-N} (star) acc. to parameterization	V	AC 63,5 V AC 110 V AC 230 V AC 400 V (max. 347 V AC for UL)	±0.2 %	±0.1 %
Voltage unbalanced V_{unbal}	%	–	±0.15 %	±0.15 %
Current I acc. to parameterization	A	AC 1 A AC 5 A	±0.2 %	±0.1 %
Current unbalanced I_{unbal}	%	–	±0.15 %	±0.15 %
Active power P + demand, – supply	W	–	±0.5 % 0.2 s acc. to IEC 62053-21	±0.2 %

Measurands	Unit	Rated value	Operat. measurem. uncertainty	
			acc. to IEC 61557-12 [3]	acc. to IEC 60688 [1]
Reactive power Q + inductive, – capacitive	var	–	±0.5 %	±0.2 %
Apparent power S	VA		±0.5 %	±0.2 %
Power factor PF [2]	–	–	±1.0 %	±0.5 %
Active power factor cos φ [2]	–	–	±1.0 %	±0.5 %
Phase angle φ [2]	Grad	–	±2°	±1°
Frequency f	Hz	50 Hz and 60 Hz	10 mHz (from 30 % to 120 % U_{rated})	10 mHz (from 30 % to 120 % U_{rated})
Active energy $WP_{_supply}$	Wh	–	±0.5 %	±0.5 %
Active energy $WP_{_supply}$	Wh	–	±0.5 %	±0.5 %
Reactive energy $WQ_{_inductive}$	varh	–	±0.5 %	±0.5 %
Reactive energy $WQ_{_capacitive}$	varh	–	±0.5 %	±0.5 %
Apparent energy WS	VAh	–	±0.5 %	±0.5 %

[1] At reference conditions are applicable from 0.1 to 1.2 x nominal range.
[2] Measurements from 2 % of the rated apparent power value onwards in the selected measuring range.
[3] Valid for operating temperature.

Table 2/22 Technical data

Technical data

General electrical data and reference conditions

Supply voltage	
Rated input voltages	110 V AC to 230 V AC or 24 V DC to 250 V DC
System frequency at AC	45 Hz to 65 Hz
Admissible input voltage tolerance (valid for all input voltages)	±20 %
Permitted ripple of the input voltage at 24 V DC, 48 V DC, 60 V DC, 110 V DC, 220 V DC, 250 V DC	15 %
Permitted harmonics at 115 V, 230 V	2 kHz
Max. inrush current at ≤ 110 V DC; ≤ 115 V AC at 220 V DC to 300 V DC; 230 V AC	 < 15 A ≤ 22 A (after 250 µs: < 5 A)
Maximum power consumption	6 W / 9 VA

Battery	
Type	CR2032
Voltage	3 V
Capacity	230 mAh

Degree of protection according to IEC 60529	
Device front	IP20
Device rear (connections)	IP20

Reference conditions for determining the test data (precision specifications under reference conditions)	
Rated input current	±1 %
Rated input voltage	±1 %
Frequency	45 Hz to 65 Hz
Curve shape sine, total harmonic distortion	≤ 5 %
Ambient temperature	23 °C ±1 °C
Supply voltage	VHN ±1 %
Warm-up time	≥ 15 min
Interfering fields	none

Communication data

Ethernet	
Bus protocol	IEC 60870-5-104 Server or Modbus TCP
Transmission rate	10 / 100 Mbit / s
Communication protocol	IEEE 802.3
Connection	100 Base-T (RJ45)
Cable for 100Base-T	100 Ω to 150 Ω STP, CAT5
Maximum cable length 100Base-T	100 m (if well installed)
Voltage strength	DC 700 V

Environmental data

Supply voltage	
Operating temperature continuous operation	 –25 °C to +55 °C / –13 °F to 131 °F
Temperature during transportation during storage	 –25 °C to +70 °C / –13 °F to 158 °F –25 °C to +70 °C / –13 °F to 158 °F
Maximum temperature gradient	20 K / h
Air humidity mean relative air humidity per year maximum relative air humidity	 ≤ 75 % 95 % 30 days a year
Condensation during operation during transportation and storage	 not permitted permitted

Regulations and standards

Climate	
Cold	IEC 60688-2-1 Test Ad IEEE C37.90
Dry heat during operation, storage, and transportation	IEC 60688-2-2 Test Bd IEEE C37.90
Damp heat	DIN EN 60688-2-78:2002-09 IEEE C37.90
Damp heat – cyclic	IEC 60688-2-30 Test Db
Change of temperature	IEC 60688-2-14 Tests Na and Nb
Individual gas test, industrial atmosphere, sequential gas test	IEC 60688-2-42 Test Kc IEC 60688-2-43
Flowing mixed gas	IEC 60688-2-60 Method 4
Salt fog test	IEC 60688-2-11 Test Ka

Mechanics	
Vibration during operation	IEC 60688-2-6 Test Fc IEC 60255-21-1

Table 2/23 Technical data

Connection diagram / dimension drawings

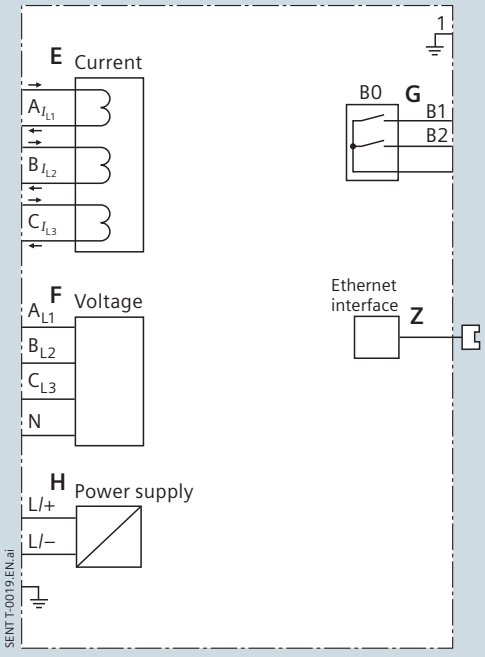

Fig. 2/55 Connection diagram

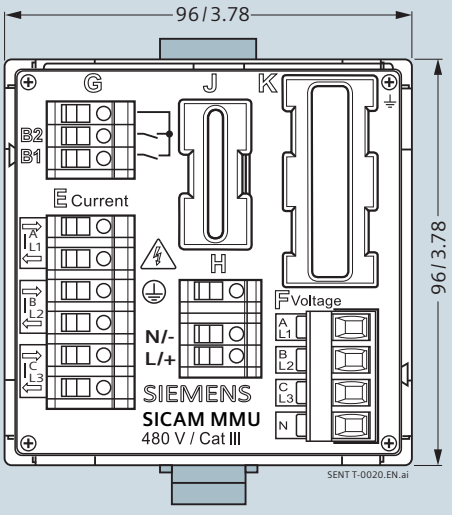

Dimensions in mm / in.

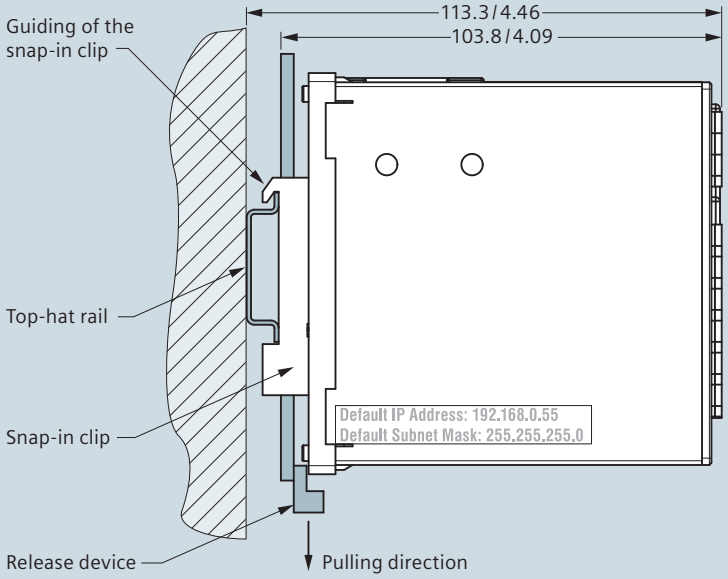

Fig. 2/56 Dimension drawings

Selection and ordering data

Description	Order No.
Measurement and monitoring unit	
SICAM MMU	**7KG9663 - □ A A 0 0-□ A A 0**
Device type – DIN-rail mounting device without display, IP20 – Dimensions 96 mm x 96 mm x 100 mm / 3.78 in. x 3.78 in. x 3.94 in. (W x H x D) – 2 binary outputs – web server – Measurements: V, I, f, P, Q, S, cos φ, energy, harmonics – UL Listing – Ethernet port RJ45	
AC input circuits	
Resistive voltage divider	1
Galvanic isolated voltage input	2
Ethernet interface and communication protocol	
Modbus TCP	1
Modbus TCP and IEC 60870-5-104 (IEC 60870-5-104 redundant and SICAM I/O Unit Integration)	4
Use SICAM I/O (7XV5673) Unit and Y-Cable (7KE6000-8GD00-0BA2) for more Digital Inputs and Outputs	

Table 2/24 Selection and ordering data SICAM MMU

Description	Order No.
SICAM I/O Unit	**7XV5673 - 0 J J □ 0-□ A A 1**
integrated electrical Ethernet interface, connection RJ45	
Device type Case 96 mm x 96 mm x 100 mm / 3.78 in. x 3.78 in. x 3.94 in. (W x H x D)	
Inputs and Outputs 3 Binary inputs with adjustable threshold voltage 3 Relay outputs (2 NO, 1 CO)	
3 Binary inputs with adjustable threshold voltage 3 Relay outputs (2 NO, 1 CO)	
Serial interface and communication protocol	
Without serial communication	0
RS485 – Modbus RTU, I/O mirror	1
FO 820 nm – Modbus RTU, I/O mirror	2
Protection class Snap-on mounting unit, protection class IP20	
Communication interface and communication protocol	
Ethernet interface with Modbus TCP/UDP or I/O mirror	1
Ethernet interface with Modbus TCP/UDP, I/O mirror, or IEC 61850 (Goose, MMS, Reporting)	2
Features Integrated Ethernet switch	

Table 2/25 Selection and ordering Data SICAM I/O Unit

For the connection as sub-device in the SICAM MMU, please order the SICAM I/O Unit: 7XV5673-0JJ00-1AA1.

DNV KEMA Energy & Sustainability

ATTESTATION OF CONFORMITY

No. 74104022-MOC-INC-13-1712

Issued to:
Siemens AG
Wernerwerkdamm 5
13629 Berlin
Germany

for the product:
SICAM MMU 7KG9663
Version: V02
Type: IEC 104 Controlled station,
Software version: V02.00.08

With the implemented communication protocol:

IEC 60870-5-104 ed.2 (IS 2006)

Network Access for IEC 60870-5-101 using standard transport profiles in Standard direction and the Siemens IEC 60870-5-104 Configuration/Interoperability Guide for SICAM MMU 7KG9663 (document version v2.00, April 2013).

The product has not been shown to be non-conforming to the specified protocol standard, including the interface requirements.

End-to-End data element tests for the information and control points as described in manufacturer Protocol Implementation Conformance Statement (PICS) have been performed on the product's protocol implementation. Functional tests in controlled mode are performed for the following levels:

• *Station initialization* • *Redundancy* • *Cyclic data transmission* • *Acquisition of events*	• *General interrogation* • *Command transmission* • *Counter interrogation*

The test campaign did not reveal any errors in the product's protocol implementation.

This Attestation is granted on account of tests made at location of DNV KEMA in Arnhem, The Netherlands and performed with UnIECim 60870-5-104 version 2.0.2 (2013) running CS104 Test Suite version 1.41. The results, including remarks and limitations, are laid down in DNV KEMA report no. 74104022-MOC-INC-13-1713.

The tests have been carried out on one single specimen of the product, submitted by Siemens. The Attestation does not include an assessment of the manufacturer's production. Conformity of his production with the specimen tested by DNV KEMA is not the responsibility of DNV KEMA.

Arnhem, April 25, 2013

M. Adriaensen
Intelligent Networks and Communication

P.H.S. Ermens
Test Consultant

IMPORTANT: Remarks apply to this implementation. Publication of this document is allowed.
See the resulting report for full details. Publication in total or in part and/or reproduction in whatever way of the contents of the above mentioned report(s) is not allowed unless permission has been explicitly given either in the report(s) or by previous letter.

KEMA Nederland B.V.
Utrechtseweg 310, 6812 AR ARNHEM, The Netherlands
P.O. Box 9035, 6800 ET ARNHEM, The Netherlands
Tel . +31 26 356 9111
Fax. +31 26 351 3683
www.dnvkema.com
contact@dnvkema.com

Disclaimer of liability

CE conformity

This product complies with the directive of the Council of the European Communities on the approximation of the laws of the Member States relating to electromagnetic compatibility (EMC Council Directive 2004 / 108 / EC) and concerning electrical equipment for use within specified voltage limits (Low-Voltage Directive 2006 / 95 / EC).
This conformity has been established by means of tests conducted by Siemens AG according to the Council Directive in agreement with the generic standards EN 61000-6-2 and EN 61000-6-4 for the EMC directives, and with the standard EN 61010-1 for the low-voltage directive.
The device has been designed and produced for industrial use. The product conforms to the standard EN 60688.

Disclaimer of liability

This document has been subjected to rigorous technical review before being published. It is revised at regular intervals, and any modifications and amendments are included in the subsequent issues. The content of this document has been compiled for information purposes only. Although Siemens AG has made best efforts to keep the document as precise and up-to-date as possible, Siemens AG shall not assume any liability for defects and damage which result through use of the information contained herein. This content does not form part of a contract or of business relations; nor does it change these. All obligations of Siemens AG are stated in the relevant contractual agreements. Siemens AG reserves the right to revise this document from time to time.

Document version: 04
Release status: 09.2014

Copyright

Copyright © Siemens AG 2014. All rights reserved.
The disclosure, duplication, distribution and editing of this document, or utilization and communication of the content are not permitted, unless authorized in writing. All rights, including rights created by patent grant or registration of a utility model or a design, are reserved.

Registered trademarks

SIMEAS, DIGSI, SICAM, SIGUARD, DAKON, and SIMATIC are registered trademarks of Siemens AG. Any unauthorized use is illegal. All other designations in this document can be trademarks whose use by third parties for their own purposes can infringe the rights of the owner.

SIEMENS



Power Quality devices for all applications

SICAM T
Digital Measurement Transducer

siemens.com/powerquality

Contents – SICAM T

	Page
Device description	3/3
Device description, Applications	3/4
Specific functions and design	3/5
Measurands	3/6
Connection types	3/7
Graphical user interface	3/8
Technical data	3/10
Connection diagram, dimension drawings	3/13
Selection and ordering data	3/14
CE conformity and IEC 61850 certificate	3/15

Device description

SICAM T is a digital measurement transducer that allows the measuring of electrical quantities in electrical networks in a single unit. In industries, power plants and substations, transducers are especially used for measurand (e.g. current, voltage, power, phase angle, energy or frequency) assignment into further processing through analog outputs or communication interface for precise control, notification or visualization tasks.

Device type

- Top-hat rail mounted device
- Plastic case 96 mm × 96 mm × 100 mm / 3.78 in. x 3.78 in. x 3.94 in. (W × H × D)
- Degree of protection IP20.

Input and output circuits

- 4 inputs for alternating voltage measurements
- 3 inputs for alternating current measurements up to 10 A continuous
- 4 optional DC analog outputs freely configurable:
  - Direct currents: 0 mA to 20 mA, 4 mA to 20 mA and –20 mA to 20 mA
  - Direct voltages: 0 V to 10 V and –10 V to 10 V
- Individually programmable binary outputs.

Signalization LEDs

Automatically monitor the functions of its hardware, software, and firmware components.

Communication

- Ethernet: IEC 61850 or Modbus TCP communication protocol
- Optional serial RS485 interface that enables the device to communicate via the Modbus RTU or the IEC 60870-5-103 communication protocol.

Measurands

The following measurands can be recorded or calculated from the measured quantities:

- TRMS (True RMS) for alternating voltage and current
- Active, reactive and apparent power
- Active, reactive and apparent energy
- Power frequency
- Phase angle
- Power factor and active power factor
- Voltage and current unbalance
  - Mean value of the 3-phase voltages: V_{avg}
  - Mean value of the 3-phase currents: I_{avg}.

Time synchronization

For a common time basis when communicating with peripheral devices and time stamping of the process data.

- External time synchronization via Ethernet NTP
- External time synchronization via field bus using the Modbus RTU or the IEC 60870-5-103 communication protocol
- Internal time synchronization via RTC (if external time synchronization is not available).



Fig. 3/1 SICAM T digital measurement transducer

Response time for analog and binary outputs

The faster response time of the analog and binary output is a very important feature of SICAM T that enables a reliable reaction of the controlling applications. The response time of the device is 120 ms at 50 Hz and 100 ms at 60 Hz.

Applications

- Conversion and integration of measurands into substation automation, protection or SCADA process via RTU and / or via protocols IEC 61850 (for 7KG9662 variant), Modbus TCP, IEC 60870-5-103 for further control and / or monitoring tasks
- Monitoring of lower voltage levels and heavy load control, e.g. air conditioning and motors
- Depending on the device type, the input circuits for voltage measurement are either designed as voltage dividers or they are galvanically isolated. Devices with galvanic isolation can be used without voltage transformers in the power systems IT, TT and TN. Devices with a voltage divider can also be used in these power systems; for IT power systems, however, an upstream voltage transformer is required.

Main features

- Design: Compact and robust for flexible application in industrial and utility environments
- Connections in 1-phase systems, in 3-wire and 4-wire systems
- Applications: Flexible for power utilities, industrial and commercial sector applications
- Measurements: up to 60 measured or calculated values available
- Temperature range: –25 °C to +55 °C / –13 °F to 131 °F
- Uncertainty: typically 0.1 % for voltage and current at rated input IEC 60688, and 0.2 s acc. to IEC 62053-21
- High EMC immunity: according to standards EN 61000-6-2 and EN 61000-6-4 for the EMC directives, and with the standard EN 61010-1 for the low-voltage directive
- UL Certfication: This product is UL-certified to standard UL 61010-1.

Device description, Applications

Highlights

- Flexible current measurement range (up to 2 × I_n)
- 4 fast analog outputs (reaction approx. 120 ms at 50 Hz and 100 ms at 60 Hz) for reliable control
- 2 individual binary outputs for fast switching, indications (e.g., limit violation) and operation status monitoring
- 4 LEDs for local status visualization
- Ethernet communications via IEC 61850 and Modbus TCP and serial interface via Modbus RTU or IEC 60870-5-103
- Internal battery for real time clock and saving of energy counter values in case of a power outage
- User-friendly operation through web server (no extra software for parameterization needed, no converters and extra cables)
- Real time clock (RTC), field bus synchronization or network synchronization possible via NTP.

Applications

SICAM T applications: Local monitoring or control purposes through assignment of up to 60 available electrical parameters to analog outputs, notifications through binary outputs or integration into SCADA / monitoring systems through communication interface, e.g. serial or Ethernet (Fig. 2/58; Table 2/26).

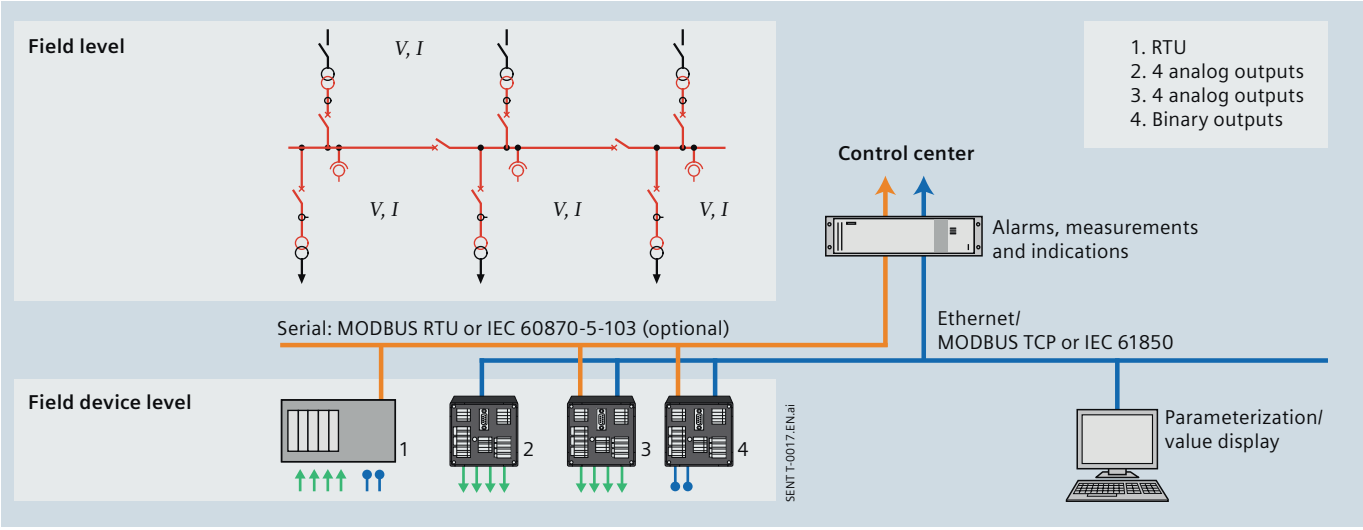

Fig. 3/2 SICAM T applications

Application area		Voltage	Current	Power	Frequency	Phase angle	Energy	Alarm	Internal cost allocation
Generation substation	Generator	■	■	■	■	■	■	■	
Transmission substation	Incoming line	■	■	■					
	Outgoing line	■	■	■					
Transformer substation	Incoming line	■							
	Bus	■	■	■	■		■		
	Feeder	■	■	■					
Transformer distribution	Incoming line	■							
	Bus	■	■	■	■		■		
	Feeder	■	■	■					
Process	SCADA / EMS / DMS	■	■	■	■	■	■		
	Energy management	■	■	■	■	■	■	■	■
	Motors	■	■	■	■	■		■	■
	Commercial (e.g. air conditioning)	■	■	■				■	■

Table 3/1 Selection and ordering data

Specific functions and design

Measurement process and connections

The measurements are obtained from the alternating quantities of current and voltage supplied to the different measuring inputs. Rated input alternating voltages up to $V_{ph\text{-}N}$ = 400 V and $V_{ph\text{-}ph}$ = 690 V can be fed in using internal resistive input voltage dividers.
The internal current transformers process rated input alternating currents up to 5 A. The circuits connected on the input side are isolated galvanically from the current transformers to ensure that the potential is decoupled. The input values are processed and then output as analog values or digital data by the corresponding interfaces, converted into direct currents and / or direct voltages depending on the parameter settings, or transmitted to peripheral devices for analysis.

Response time for analog outputs

The faster response time of the analog and binary output is a very important feature of SICAM T that enables a reliable reaction of the controlling applications. The response time of the device is 120 ms at 50 Hz and 100 ms at 60 Hz.

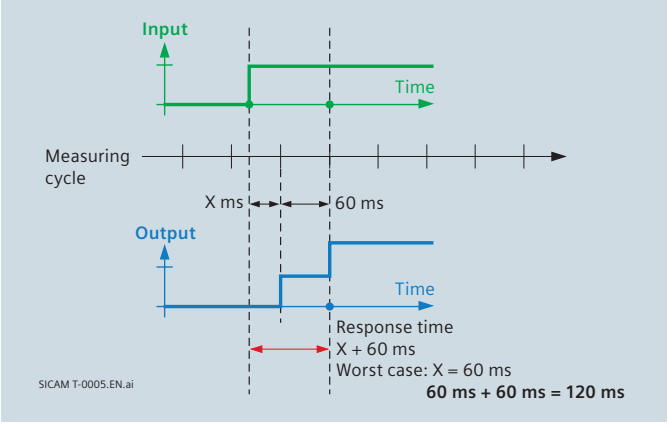

Fig. 3/3 Response time diagram

Communication

To communicate with the systems control and other process automation equipment, the device features an Ethernet interface, and if installed in the device model, an RS485 interface. Ethernet supports the device parameterization, the transmission of measured data, metered values and indications and the time synchronization via NTP. The communication protocols are HTTP, IEC 61850 (7KG9662) and Modbus TCP. The RS485 interface supports the transmission of the measured data, metered values and indications, and the time synchronization. Depending on the device version, either the Modbus RTU or the IEC 60870-5-103 communication protocol can be used.

Time synchronization

The following types of time synchronization can be executed:

- External time synchronization via Ethernet NTP (preferred)
- External time synchronization via field bus using the Modbus RTU or the IEC 60870-5-103 communication protocol
- Internal time synchronization via RTC with quartz oscillator (if external time synchronization is not available).

Electrical assembly

SICAM T 7KG966 contains the following electrical modules depending on the device version:

- Digital signal processor (DSP)
- 4 inputs for AC voltage measurements
- 3 inputs for AC current measurements
- 4 DC analog outputs (optional)
- 2 binary outputs
- Supply voltage
- Serial RS485 interface (option for 7KG9661)
- Ethernet interface (standard).

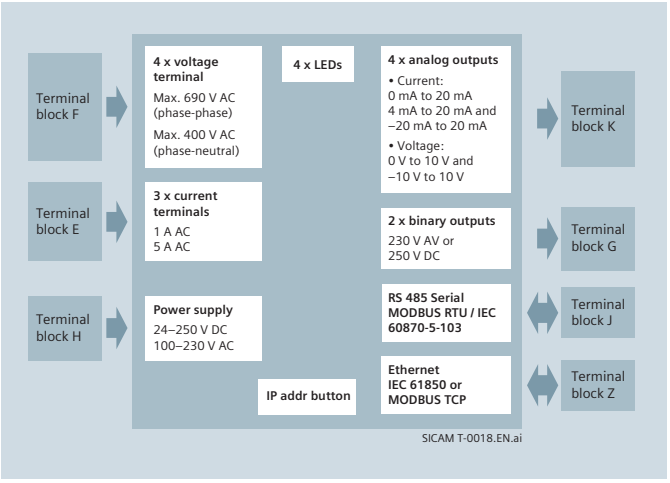

Fig. 3/4 Block diagram SICAM T 7KG9661

Mechanical design

The electrical modules are installed in a plastic case with the dimensions 96 mm × 96 mm × 100 mm / 3.78 in. x 3.78 in. x 3.94 in. (W × H × D). The case is prepared for mounting on a top-hat rail.
The top side of the device accommodates the RJ45 Ethernet connector with two LEDs and four additional LEDs.

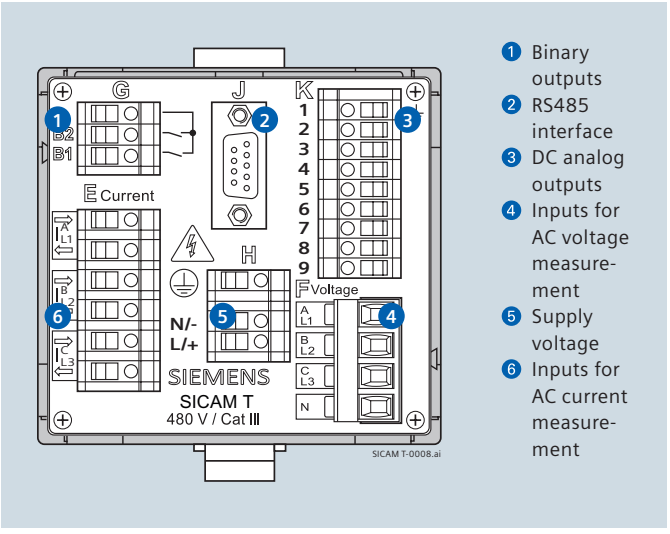

Fig. 3/5 Connectors on the device

Measurands

Measurand		Circuit	1-phase system	3-wire network (delta)			4-wire network (star)	
				balanced (1I)	unbal-anced (3I)	unbal-anced (2I)	balanced (1I)	unbal-anced (3I)
AC voltage	V_a	a-N	■				■	■
	V_b	b-N						■
	V_c	c-N						■
	V_{ab}, V_{bc}, V_{ca}	a-b, b-c, c-a		■	■	■		■
	V_N	a, b, c						■
	V_{avg}	a, b, c		$\Sigma V_{ph}/3$	$\Sigma V_{ph}/3$	$\Sigma V_{ph}/3$	a-N	$\Sigma V_{ph}/3$
	V_{unbal}	a-b, b-c, c-a		■	■	■		■
AC current	I_a	a	■	■	■	■	■	■
	I_b, I_c	b, c			■	■		■
	I_N	a, b, c			■			■
	I_{avg}	a, b, c			■	■		$\Sigma I_{ph}/3$
	I_{unbal}	a, b, c			■	■		■
Active power factor	cos φ (a)	a	■					■
	cos φ (b), cos φ (c)	b, c						■
	cos φ	a, b, c		■	■	■	■	■
Power factor	PF_a	a	■					■
	PF_b, PF_c	b, c						■
	PF	a, b, c		■	■	■	■	■
Phase angle	φ_a	a	■					■
	φ_b, φ_c	b, c						■
	φ	a, b, c		■	■	■	■	■
Frequency	f	a, b, c	■	■	■	■	■	■
Active power	P_a	a	■					■
	P_b, P_c	b, c						■
	P	a, b, c		■	■	■	■	■
Reactive power	Q_a	a	■					■
	Q_b, Q_c	b, c						■
	Q	a, b, c		■	■	■	■	■
Apparent power	S_a	a	■					■
	S_b, S_c	b, c						■
	S	a, b, c		■	■	■	■	■
Active energy – supply	$WP_{a\ supply}$	a	■					■
	$WP_{b\ supply}$, $WP_{c\ supply}$	b, c						■
	WP_{supply}	a, b, c		■	■	■	■	■
Active energy – demand	$WP_{a\ demand}$	a	■					■
	$WP_{b\ demand}$, $WP_{c\ demand}$	b, c						■
	WP_{demand}	a, b, c		■	■	■	■	■
Reactive energy – inductive	$WQ_{a\ inductive}$	a	■					■
	$WQ_{b\ inductive}$, $WQ_{c\ inductive}$	b, c						■
	$WQ_{inductive}$	a, b, c		■	■	■	■	■
Reactive energy – capacitive	$WQ_{a\ capacitive}$	a	■					■
	$WQ_{b\ capacitive}$, $WQ_{c\ capacitive}$	b, c						■
	$WQ_{capacitive}$	a, b, c		■	■	■	■	■
Apparent energy	WS_a	a	■					■
	WS_b, WS_c	b, c						■
	WS	a, b, c		■	■	■	■	■

Table 3/2 Measurands according to the connection type: Power measurands in power systems

Connection types

SICAM T 7KG9661 supports the following connection types:

- 1-phase system
- 3-wire network (balanced)
- 3-wire network (unbalanced), 2 current inputs
- 3-wire network (unbalanced), 3 current inputs
- 4-wire network (balanced)
- 4-wire network (unbalanced).

1-phase system, no voltage transformer

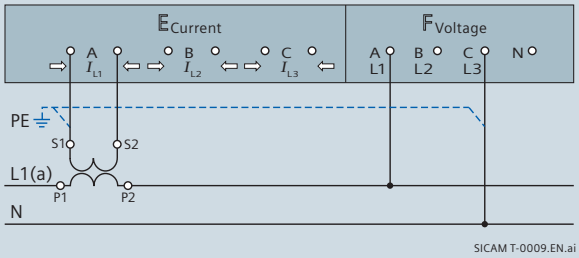

3-wire network, 2 voltage transformers and 1 current transformer, balanced*

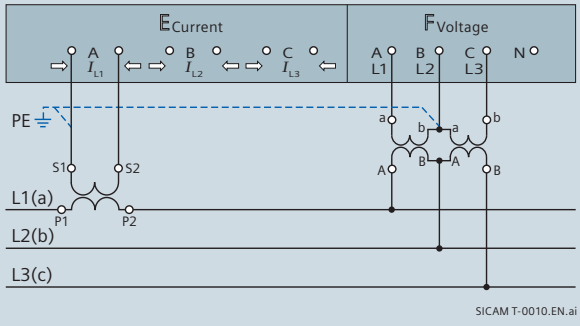

3-wire network, 2 voltage transformers and 3 current transformers, unbalanced*

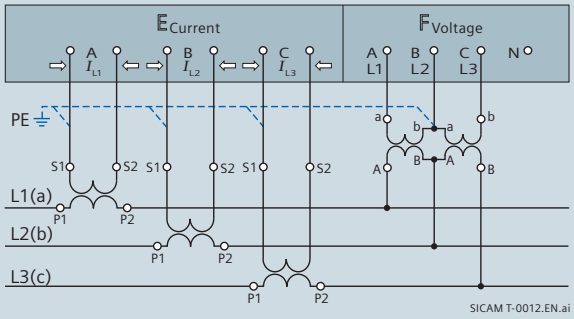

4-wire network, 1 voltage transformer and 1 current transformer, balanced

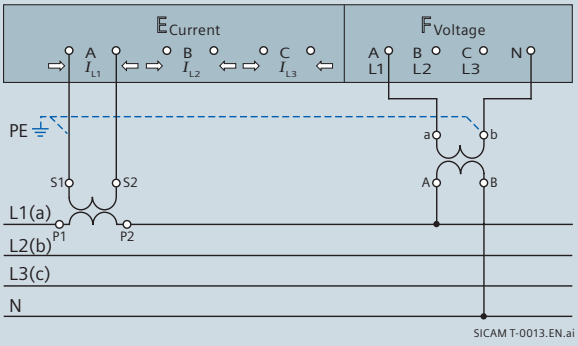

4-wire network, no voltage transformer and 3 current transformers, unbalanced

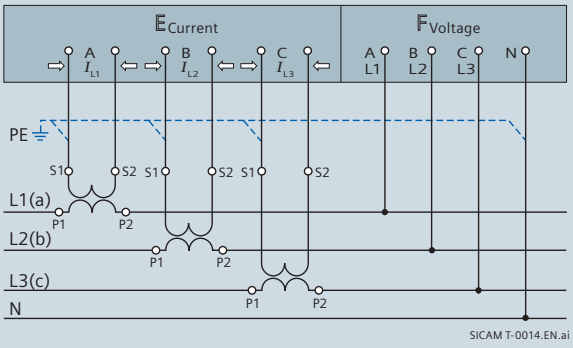

4-wire network, 3 voltage transformers and 3 current transformers, unbalanced

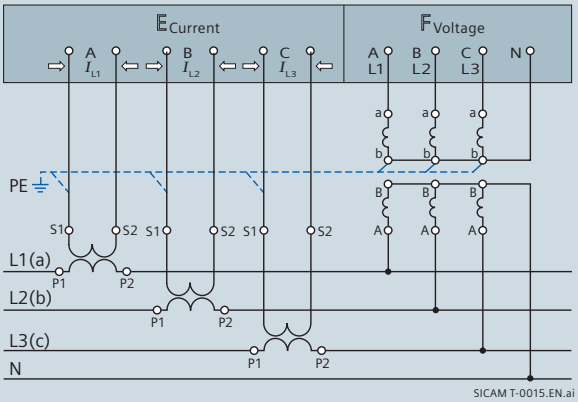

* **Important:** The maximum secondary voltage for this connection example is 480 V AC. The maximum allowable voltage between phase and ground must not be exceeded. For IT network connection, please read carefully the devices manual for detailed description.

Fig. 3/6 Connection types

Graphical user interface

Parameterization and monitoring software

The device is configured from a connected PC or notebook only.
The user interface SICAM T GUI (GUI = Graphical User Interface) is implemented in the device, meaning that for the whole operation and parameterization of the device no additional software is required. It is possible to navigate through the Microsoft Internet Explorer using the icons on the toolbar.
Device status, such as communication, parameterization, log files, value view and maintenance, can be easily processed through SICAM T GUI interface.

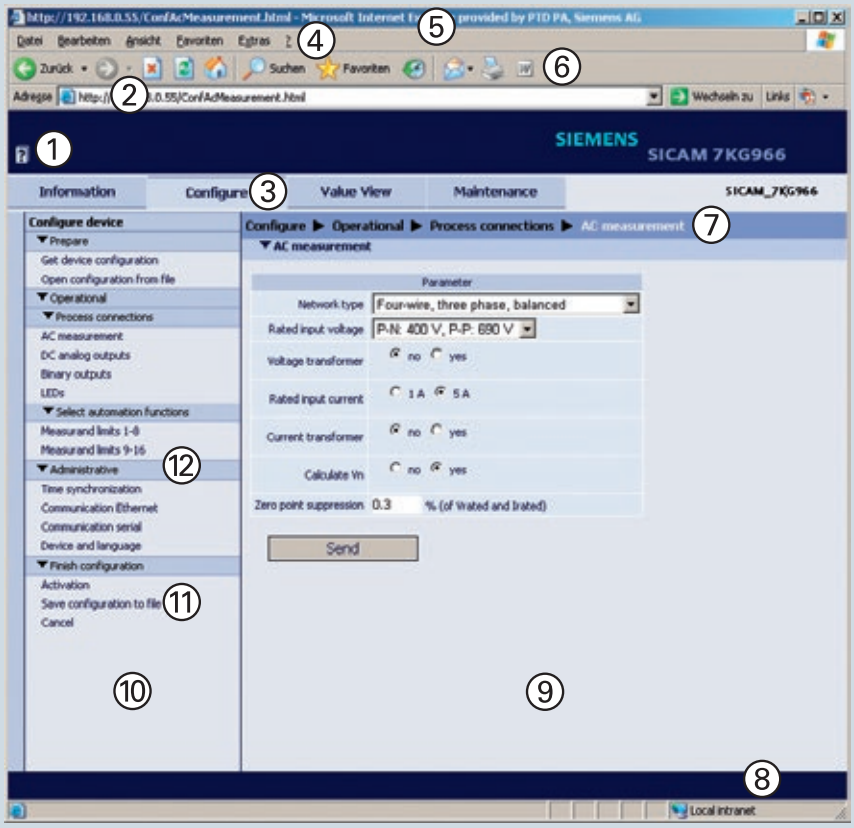

① Online help
② Address bar
③ Tab
④ Menu bar
⑤ Microsoft Internet Explorer
⑥ Toolbar
⑦ Navigation bar
⑧ Status bar
⑨ Input / output window
⑩ Navigation window
⑪ Element
⑫ Menu

Fig. 3/7 Layout of the SICAM T GUI user interface

Information

The navigation window of the "Information" tab contains the device information, as well as operative and device logs. It offers the complete overview of the device status.

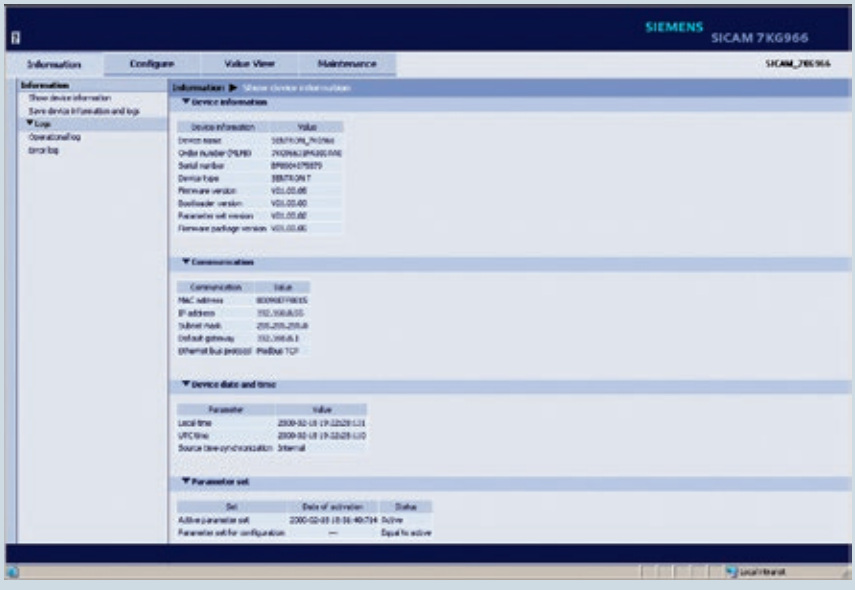

Fig. 3/8 Information tab, shows device information input / output window

Configuration
The configuration mode allows to set the device parameters. It is possible to tailor the process connections to the installation environment, specify the limits of the measuring ranges, parameterize the communication, and make various operational settings.

Analog outputs
The following types of characteristics are used for the transmission of measured values to the DC analog outputs:
Linear, Zoom, Live-Zero, Knee point, Knee-point Zoom, Bipolar Linear, Bipolar Knee-point Zoom, Square Transfer Characteristic (U^2).

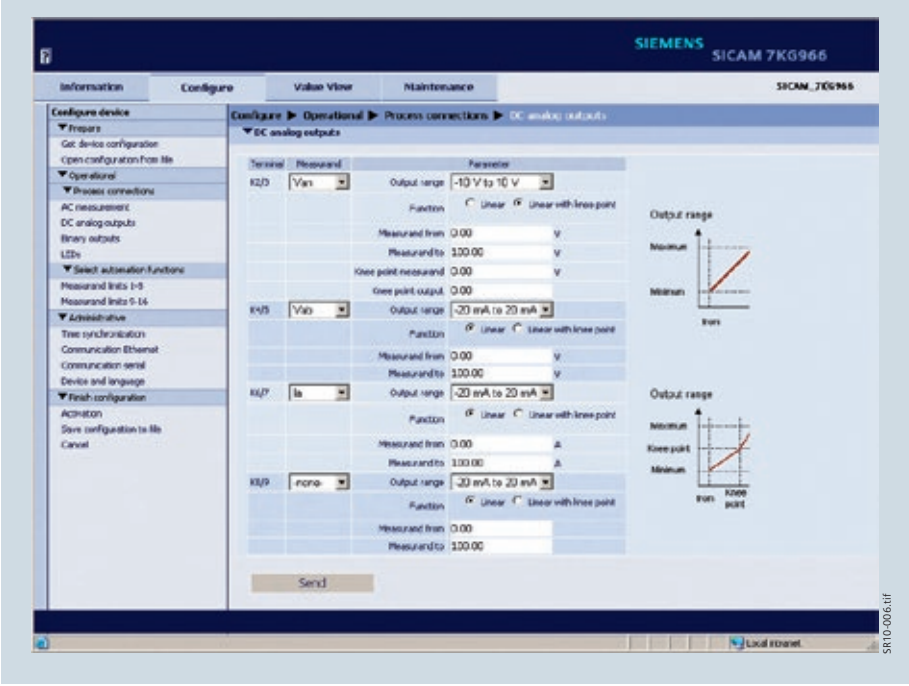

Fig. 3/9 DC analog outputs input / output window

Value View
The measured values are displayed in the "Value View" tab.
- AC operational values
- AC power and energy
- DC analog outputs
- Binary outputs
- Measurand limits.

Depending on which operational parameters are selected, the input / output window displays the measured values of the measurands with the corresponding unit or indications in a tabular list that is updated every 5 s.

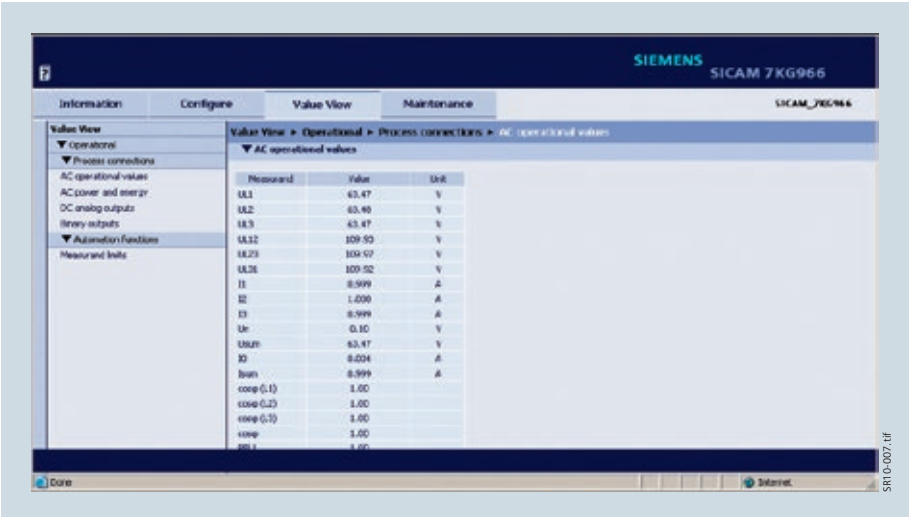

Fig. 3/10 Value View tab

Maintenance
The "Maintenance" tab allows to update the firmware, perform calibration, make various presettings, view and delete logs, and analyze protocol-specific communication data.

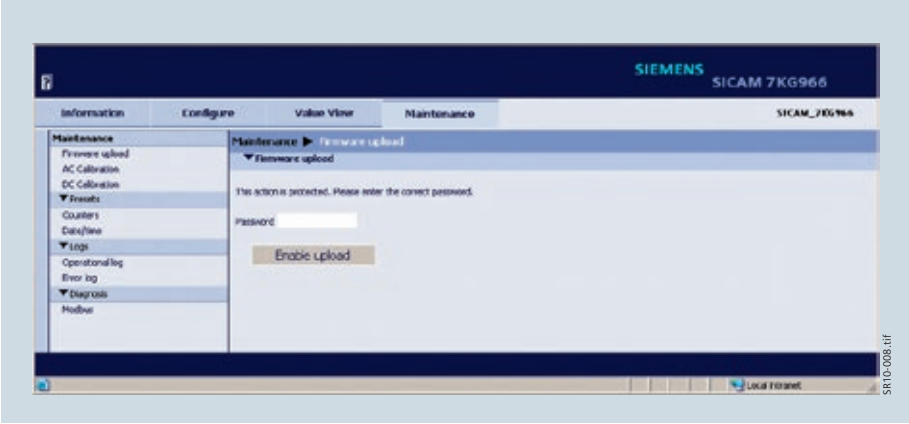

Fig. 3/11 Maintenance tab

Technical data

Electrical data / inputs

Inputs for alternating voltage measurements	
Rated input voltage (selectable via parameter)	ph-N: 63.5 V AC, ph-ph: 110 V AC ph-N: 110 V AC, ph-ph: 190 V AC ph-N: 230 V AC, ph-ph: 400 V AC ph-N: 400 V AC (max. 347 V at UL) ph-ph: 690 V AC (max. 600 V at UL)
Max. input voltage	1.2 × rated input voltage
Max. supply voltage phase-N / PE phase-phase	480 V 831 V
Power consumption per input for U_{rated} 400 V AC	38 mW
Permissible power frequency	45 Hz to 65 Hz
Input impedances a, b, c to N a, b, c, N to PE a-b, b-c, c-a	7,9 MΩ 3,9 MΩ 7,9 MΩ
Measuring error (with calibration) at 23 °C ±1 °C; 50 Hz or 60 Hz	typically 0.2 % at rated input voltage
Continuous overload capacity	1.5 × rated input voltage (600 V)
Surge overload capacity	2 × rated input voltage (800 V) according to IEC 60255-27

Inputs for alternating current measurements	
Rated input current ranges (selectable via parameter)	1 A, 5 A
Max. input current	2 × rated input current
Max. rated input voltage	150 V
Power consumption per input at 1 A AC at 5 A AC	 1 mVA 2.5 mVA
Permissible power frequency	45 Hz to 65 Hz
Measuring error (with calibration) at 23 °C ±1 °C; 50 Hz or 60 Hz:	typically 0.2 % at rated input current
Thermal stability	10 A continuous 100 A for max. 1 s according to IEC 60688

Electrical data / outputs

DC analog outputs	
Use as current outputs (direct current)	
Rated output current	±20 mA
Maximum output current	±24 mA
Maximum load impedance (incl. line impedance)	< 400 Ω
Short-circuit current (short-circuit proof)	±24 mA
No-load voltage (idling-proof)	15 V
Measuring error (with calibration) at 23 °C ±1 °C	max. 0.1% at rated current
Response time	120 ms (50 Hz), 100 ms (60 Hz)

DC analog outputs	
Use as voltage outputs (direct voltage)	
Rated output voltage	±10 V
Maximum output voltage	±12 V
Minimum load impedance	1 kΩ
Short-circuit current (short-circuit proof)	±24 mA
Measuring error (with calibration) at 23 °C ±1 °C	max. 0.1 % at rated voltage
Response time	120 ms (50 Hz), 100 ms (60 Hz)

Binary outputs	
Maximum switching voltage Alternating voltage Direct voltage	 230 V 250 V
Maximum continuous contact current	100 mA
Maximum pulse current for 0.1 s	300 mA
Internal impedance	35 Ω
Admissible switching frequency	10 Hz
Number of switching cycles	unlimited

Table 3/3 Technical data

Tolerance limits

Measurands	Unit	Rated Value	Operat. measurem. uncertainty	
			acc. to IEC 61557-12	acc. to IEC 60688 [1]
Voltage $V_{ph\text{-}ph}$ (delta) acc. to parameterization	V	AC 110 V AC 190 V AC 400 V AC 690 V (max. 600 V AC for UL)	±0.2 %	±0.1 %
Voltage $V_{ph\text{-}N}$ (star) acc. to parameterization	V	AC 63.5 V AC 110 V AC 230 V AC 400 V (max. 347 V AC for UL)	±0.2 %	±0.1 %
Voltage unbalanced V_{unbal}	%	–	±0.15 %	±0.15 %
Current I acc. to parameterization	A	AC 1 A AC 5 A	±0,2 %	±0.1 %
Current unbalanced I_{unbal}	%	–	±0.5 %	±0.15 %
Active power P + demand, –supply	W	–	±0.5 % 0.2 s acc. to IEC 62053-21	±0.2 %

Measurands	Unit	Rated Value	Operat. measurem. uncertainty	
			acc. to IEC 61557-12	acc. to IEC 60688 [1]
Reactive power Q + inductive, – capacitive	var	–	±0.5 %	±0.2 %
Apparent power S	VA		±0.5 %	±0.2 %
Power factor PF [2]	–	–	±1.0 %	±0.5 %
Active power factor cos φ [2]	–	–	±1.0 %	±0.5 %
Phase angle φ [2]	Degree	–	±2°	±1°
Frequency f	Hz	50 Hz, 60 Hz	10 mHz (from 30 % to 120 % U_{rated})	10 mHz (from 30 % to 120 % U_{rated})
Active energy $WP_{_demand}$	Wh	–	±0.5 %	±0.5 %
Active energy $WP_{_supply}$	Wh	–	±0.5 %	±0.5 %
Reactive energy $WQ_{_inductive}$	varh	–	±0.5 %	±0.5 %
Reactive energy $WQ_{_capacitive}$	varh	–	±0.5 %	±0.5 %
Apparent energy WS	VAh	–	±0.5 %	±0.5 %

[1] At reference conditions are applicable from 0.1 to 1.2 x nominal range.
[2] Measurements from 2 % of the rated apparent power value onwards in the selected measuring range.
[3] Valid for operating temperature.

General electrical data and reference conditions

Supply voltage	
Rated input voltages	110 V AC to 230 V AC or 24 V DC to 250 V DC
System frequency at AC	45 Hz to 65 Hz
Admissible input voltage tolerance (valid for all input voltages)	±20 %
Permitted ripple of the input voltage at 24 V DC, 48 V DC, 60 V DC, 110 V DC, 220 V DC, 250 V DC	15 %
Permitted harmonics at 115 V, 230 V	2 kHz
Max. inrush current at ≤ 110 V DC; ≤ 115 V AC at 220 V DC to 300 V DC; 230 V AC	 < 15 A ≤ 22 A (after 250 µs: < 5 A)
Maximum power consumption	6 W / 9 VA

Battery	
Type	CR2032
Voltage	3 V
Capacity	230 mAh

Degree of protection according to IEC 60529	
Device front	IP20
Device rear (connections)	IP20

Reference conditions for determining the test data (precision specifications under reference conditions)	
Rated input current	±1 %
Rated input voltage	±1 %
Frequency	45 Hz to 65 Hz
Curve shape sine, total harmonic distortion	≤ 5 %
Ambient temperature	23 °C ±1 °C
Supply voltage	UHN ±1 %
Warm-up time	≥ 15 min
Interfering fields	none

Table 3/4 Technical data

Technical data

Communication data

Ethernet	
Bus protocol	IEC 61850 Server or Modbus TCP
Transmission rate	10/100 MBit/s
Communication protocol	IEEE 802.3
Connection	100Base-T (RJ45)
Cable for 100Base-T	100 Ω to 150 Ω STP, CAT5
Maximum cable length 100Base-T	100 m (if well installed)
Voltage strength	DC 700 V

Serial RS485 interface	
Connection	9-pin D-sub plug connector

Bus protocol Modbus RTU	
Baud rate	9600 Bit/s, 19.200 Bit/s, 38.400 Bit/s, 57.600 Bit/s
Parity	even, even (fixed), odd, no (1 or 2 stop bits)
Protocol	half-duplex
Max. cable length, depending on data rate	1,000 m
Transmission level	low: –5 V to –1.5 V high: +5 V to +1.5 V
Reception level	low: ≤ –0.2 V high: ≥ +0.2 V
Bus termination	not integrated, bus termination using plugs with integrated bus terminating resistors

Bus protocol IEC 60870-5-103	
Baud rate	9600 Bit/s, 19.200 Bit/s, 38.400 Bit/s
Max. cable length, depending on data rate	1,000 m
Transmission level	low: –5 V to –1.5 V high: +5 V to +1.5 V
Reception level	low: ≤ –0.2 V high: ≥ +0.2 V
Bus termination	not integrated, bus termination using plugs with integrated bus terminating resistors

Environmental data

Supply voltage	
Operating temperature continuous operation	 –25 °C to +55 °C / –13 °F to 131 °F
Temperature during transportation during storage	 –25 °C to +70 °C / –13 °F to 158 °F –25 °C to +70 °C / –13 °F to 158 °F
Maximum temperature gradient	20 K/h
Air humidity mean relative air humidity per year maximum relative air humidity	 ≤ 75 % 95 % 30 days a year
Condensation during operation during transportation and storage	 not permitted permitted

Regulations and standards

Climate	
Cold	IEC 60688-2-1 Test Ad IEEE C37.90
Dry heat during operation, storage, and transportation	IEC 60688-2-2 Test Bd IEEE C37.90
Damp heat	DIN EN 60688-2-78:2002-09 IEEE C37.90
Damp heat – cyclic	IEC 60688-2-30 Test Db
Change of temperature	IEC 60688-2-14 Tests Na and Nb
Individual gas test, industrial atmosphere, sequential gas test	IEC 60688-2-42 Test Kc IEC 60688-2-43
Flowing mixed gas	IEC 60688-2-60 Method 4
Salt fog test	IEC 60688-2-11 Test Ka

Mechanics	
Vibration during operation	IEC 60688-2-6 Test Fc IEC 60255-21-1

Table 3/5 Technical data

Connection diagram / dimension drawings

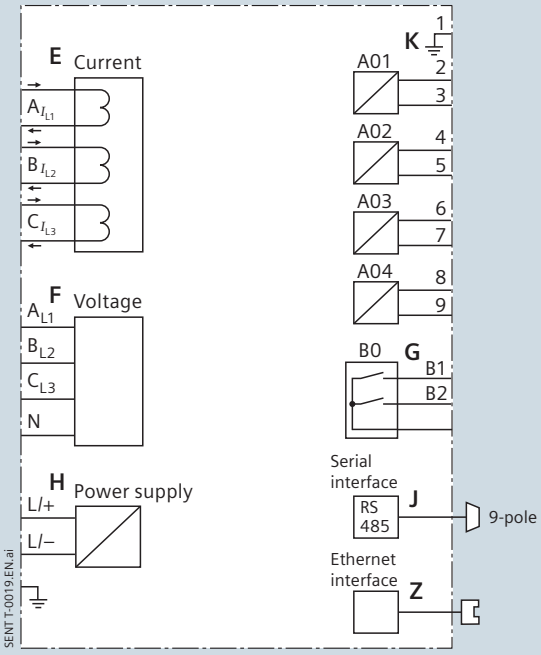

Fig. 3/12 Connection diagram

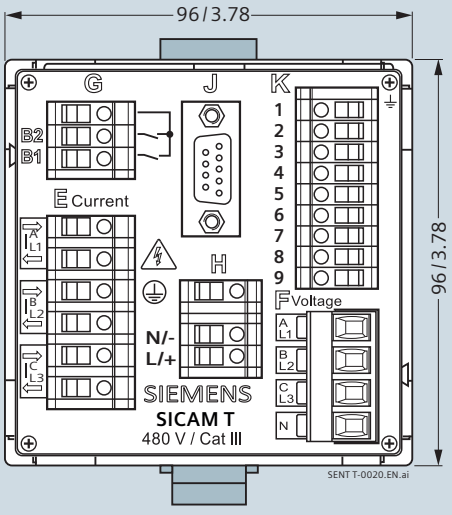

Dimensions in mm / in.

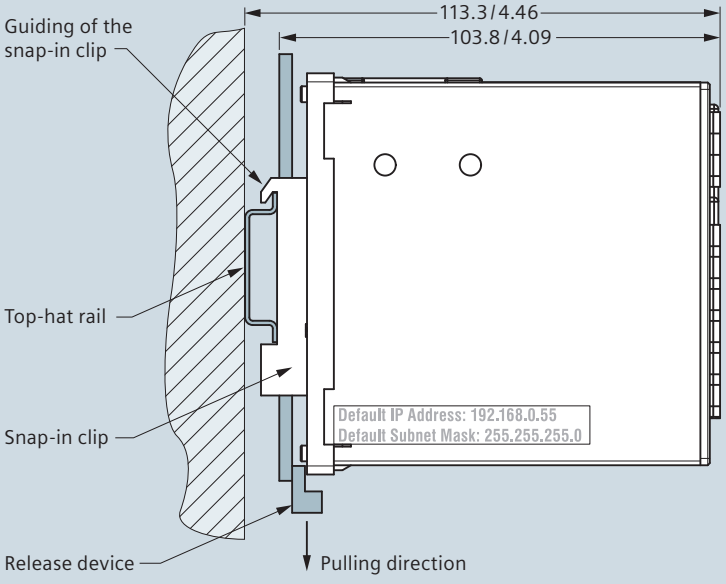

Fig. 3/13 Dimension drawings

Selection and ordering data

Description	Order No.
Multifunctional transducer	
SICAM T	**7KG9661 - □□A□0-1AA0**
Type – Snap-on mounting unit – Dimensions 96 mm x 96 mm x 100 mm / 3.78 in. x 3.78 in. x 3.94 in. (W x H x D) – 2 binary outputs – IP20 – web server – UL Certification – Measurements: *V, I, f, P, Q, S,* cos φ, energy – Modbus TCP	
Input circuits	
Resistive divider	**1**
Galvanic isolated voltage transformer	**2**
I/O board or I/O module	
Without	**A**
4 analog outputs (–20_0_20 mA/–10 V_0_10 V)	**F**
Serial interface and communication protocol	
Without	**0**
RS485 – Modbus RTU	**1**
RS485 – Modbus RTU and IEC 60870-5-103	**3**

Description	Order No.
Multifunctional transducer	
SICAM T – IEC 61850	**7KG9662 - □□A00-2AA0**
Type – Snap-on mounting unit – Dimensions 96 mm x 96 mm x 100 mm/3.78 in. x 3.78 in. x 3.94 in. (W x H x D) – 2 binary outputs – IP20 – web server – UL Certification – Measurements: V, I, f, P, Q, S, cos φ, energy – IEC 61850	
Input circuits	
Resistive divider	**1**
Galvanic isolated voltage transformer	**2**
I/O board or I/O module	
Without	**A**
4 analog outputs (–20_0_20 mA/–10 V_0_10 V)	**F**
Ethernet patch cable for parameterization	**7KE6000-8GE00-3AA0**
With double shield (SFTP), cross-over connection, LAN connector at both ends, SICAM T <–> PC; length: 3 m/9.84 in.	

Table 3/6 Selection and ordering data

CE, UL, IEC 61850 and IEC 60870-5-103 conformity certificate

CE conformity

CE

This product complies with the directive of the Council of the European Communities on the approximation of the laws of the Member States relating to electromagnetic compatibility (EMC Council Directive 2004/108/EC) and concerning electrical equipment for use within specified voltage limits (Low-voltage Directive 2006/95/EC).
This conformity has been established by means of tests conducted by Siemens AG according to the Council Directive in agreement with the generic standards EN 61000-6-2 and EN 61000-6-4 for the EMC directives, and with the standard EN 61010-1 for the low-voltage directive.
The device has been designed and produced for industrial use.
The product conforms to the standard EN 60688.

This product is UL-certified to Standard UL 61010-1, based on the specification stated in chapter 3.10–3.12 (Technical Data).

UL File No.: E228586.

c UL us LISTED

Open-type Measuring Equipment
2UD1



International Usersgroup

IEC 61850 Certificate Level A[1]

Page 1/2

No. 74100726-MOC/INC 11-2049

Issued to:
Siemens A.G., PTD EA
Protection and Substation Control Systems
Wernerwerkdamm 5
D-13623 Berlin
Germany

For the product:
SENTRON T 7KG966 Multifunctional Transducer
Firmware V02.00.04

Issued by: KEMA

The product has not shown to be non-conforming to:

IEC 61850-6, 7-1, 7-2, 7-3, 7-4 and 8-1

Communication networks and systems in substations

The conformance test has been performed according to IEC 61850-10 with product's protocol, model and technical issue implementation conformance statements: "SIEMENS Multifunctional Transducer SENTRON T 7KG966 Device Manual, E50417-H1040-C493-A1" also including the product's extra information for testing.

The following IEC 61850 conformance blocks have been tested with a positive result (number of relevant and executed test cases / total number of test cases as defined in the UCA International Users Group Device Test procedures v2.2b):

1	Basic Exchange (15/24)	6	Buffered Reporting (15/20)
2	Data Sets (3/6)	6+	Enhanced Buffered Reporting (11/12)
5	Unbuffered Reporting (13/18)	13	Time Synchronization (3/5)

This Certificate includes a summary of the test results as carried out at KEMA in the Netherlands with UniCAsim 61850 version 3.21.02 with test suite 3.21.02 and UniCA 61850 analyzer 4.23.02. The test is based on the UCA International Users Group Device Test Procedures version 2.2b. This document has been issued for information purposes only, and the original paper copy of the KEMA report: No. 74100726-MOC/INC 11-2048 will prevail.

The test has been carried out on one single specimen of the product as referred above and submitted to KEMA by Siemens. The manufacturer's production process has not been assessed. This Certificate does not imply that KEMA has certified or approved any product other than the specimen tested.

Arnhem, 25 August 2011

M. Adriaensen
Regional Director Management & Operations Consulting

R.J. Schimmel
Certification Manager

1 Level A - Independent Test lab with certified ISO 9000 or ISO 17025 Quality System

Copyright © KEMA Nederland B.V., Arnhem, the Netherlands. All rights reserved. Please note that any electronic version of this KEMA certificate is provided to KEMA's customer for convenience purposes only. It is prohibited to update or change it in any manner whatsoever, including but not limited to dividing it into parts. In case of a conflict between the electronic version and the original version, the original paper version issued by KEMA will prevail.

Products – SICAM T

SIEMENS



Power Quality devices for all applications

Power Quality Recorder

siemens.com/powerquality

Power Quality Recorder

Power Quality

Supply quality

Quality is generally recognized as an important aspect of any electricity supply service. Customers care about high quality just as much as low prices. Price and quality are complementary. Together, they define the value that customers derive from the electrical supply service.

The quality of the electricity supply provided to final customers results from a range of quality factors, for which different sectors of the electricity industry are responsible. Quality of service in the electrical supply has a number of different dimensions, which can be grouped under three general headings: Commercial relationships between a supplier and a user, continuity of supply, and voltage quality.

To avoid the high cost of equipment failures, all customers must make sure that they obtain an electricity supply of satisfactory quality, and that their electrical equipment is capable of functioning as required even when small disturbances occur. In practice, the voltage can never be perfect.

Electrical supply is one of the most essential basic services supporting an industrial society. Electricity consumers require this basic service:

- To be available all the time (i.e. a high level of reliability)
- To enable all consumers' electrical equipment to work safely and satisfactorily (i.e. a high level of power quality).

Voltage quality

Voltage quality, also termed power quality (PQ), covers a variety of characteristics in a power system. Chief among these is the quality of the voltage waveform. There are several technical standards defining voltage quality criteria, but ultimately quality is determined by the ability of customers' equipment to perform properly. The relevant technical phenomena are: Variations in frequency, fluctuations in voltage magnitude, short-duration voltage variations (dips, swells, and short interruptions), long-duration voltage variations (overvoltages or undervoltages), transients (temporarily transient overvoltages), waveform distortion, etc.

In many countries, voltage quality is regulated to some extent, often using industry-wide accepted standards or practices to provide indicative levels of performance.

Everybody is now aware of the effects of poor power quality, but few really have it under control. The levels of power quality disturbances need to be monitored weekly, sometimes even daily, in order to trigger appropriate remedial measures before severe consequences occur.

The power utility therefore has an interest in monitoring the power quality, showing that it is acting correctly and improving its know-how about the system. This ensures customer satisfaction by providing electricity with quality and reliability.

The availability and quality of power is of even greater concern to distribution companies. The liberalization of the electricity market has put them in the uncomfortable position of being affected by other players' actions. This situation has been stabilizing and power quality is becoming a top priority issue in the restructuring process. With increasing customer awareness of energy efficiency, it is clear that the quality of supply will be receiving much attention.

Most power quality problems directly concern the end user, or are experienced at this level. End users have to measure the power quality and invest in local mitigation facilities. However, consumers often turn to the utility company, instead, and exert pressure to obtain the required supply quality.

The EN 50160 power quality standard describes the main characteristics of the voltage at the customer's supply terminals in public low, medium, and, in the near future, high-voltage systems, under normal operating conditions.

Problem	Description	Cause	Effect
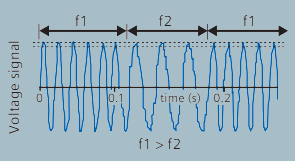 SR10.2.1-2032.en.ai	**Frequency distortions:** A frequency variation involves variation in frequency above or below the normally stable utility frequency of 50 or 60 Hz	• Start-up or shutdown of very large item of consumer equipment, e.g. motor • Loading and unloading of generator or small co-generation sites • Unstable frequency power sources	• Misoperation, data loss, system crashes and damage to equipment and motor • For certain kinds of motor load, such as in textile mills, tight control of frequency is essential
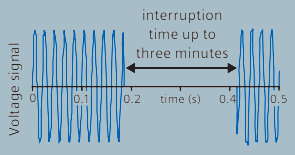 SR10.2.1-2033.en.ai	**Supply interruption:** Planned or accidental total loss of power in a specific area, short interruptions lasting from a half second to 3 minutes and long interruptions lasting longer than 3 minutes	• Switching operations attempting to isolate an electrical problem and maintain power to the area concerned • Accidents, acts of nature, etc. • Fuses, actions by a protection function, e.g. automatic recloser cycle	• Sensible processes and system shutdown or damages • Loss of computer/controller memory • Production losses or damage
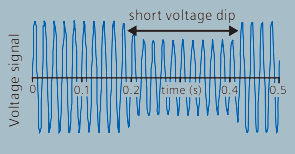 SR10.2.1-2034.en.ai	**Voltage dip/sag or swell:** Any short-term (half cycle to 60 seconds) decrease (sag) or increase (swell) in voltage	• Start-up or shutdown of very large item of consumer equipment, e.g. motor • Short circuits (faults) • Underdimensioned electrical circuit • Utility equipment failure or utility switching	• Memory loss, data errors, dim or bright lights, shrinking display screens, equipment shutdown • Motors stalling or stopping and decreased motor life
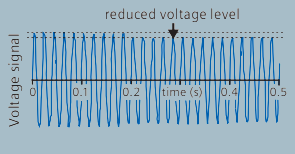 SR10.2.1-2035.en.ai	**Supply voltage variations:** Variation in the voltage level above or below the nominal voltage under normal operating conditions	• The line voltage amplitude may change due to normal changing load situations	• Equipment shutdown by tripping due to undervoltage or even overheating and/or damage to equipment due to overvoltage • Reduced efficiency or life of electrical equipment
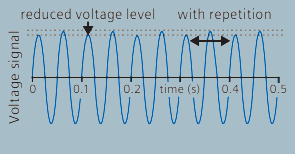 SR10.2.1-2036.en.ai	**Rapid voltage variations/ flicker:** Impression of unsteadiness of visual sensation induced by a light stimulus, the luminance or spectral distribution of which fluctuates with time	• Intermittent loads • Motor starting • Arc furnaces • Welding plants	• Changes in the luminance of lamps can result in the visual phenomenon called flicker on people, disturbing concentration, causing headaches, etc.
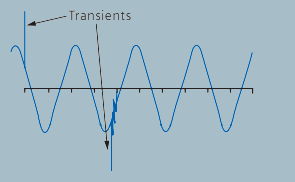 SR10.2.1-2037.en.ai	**Transient:** A transient is a sudden change in voltage up to several thousand volts. It may be of the impulsive or oscillatory type (also termed impulse, surge, or spike) **Notch:** This is a disturbance of opposite polarity from the waveform	• Utility switching operations, starting and stopping heavy equipment, elevators, welding equipment static discharges, and lightning	• Processing errors • Data loss • Lock-up of sensitive equipment • Burned circuit boards
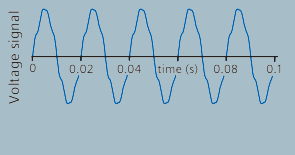 SR10.2.1-2038.en.ai	**Noise:** This is an unwanted electrical signal of high frequency from other equipment **Harmonic:** Distortion is alteration of the pure sine wave due to non-linear loads on the power supply	• Noise is caused by electromagnetic interference from appliances, e.g. microwave, radio and TV broadcasts, arc welding, loose wiring, or improper grounding • Harmonic distortion is caused by non-linear loads	• Noise interferes with sensitive electronic equipment • It can cause processing errors and data loss • Harmonic distortion causes motors, transformers, and wiring to overheat • Improper operation of breakers, relays, or fuses

Table 4/1 Main problems with power quality

Power quality

Who is responsible?
An interesting problem arises when the market fails to offer products that meet the customer's power quality needs. If a customer cannot find equipment that is designed to tolerate momentary power interruptions, the customer may, for example, pressure the power supplier and the regulator to increase the power quality of the overall distribution system. It may be in the supplier's interest to help the customer address the power quality and reliability problem locally. The electrical supply system can be considered a sort of open-access resource: In practice, almost everybody is connected to it and can "freely" feed into it. This freedom is now limited by standards, and / or agreements.

In European countries, the EN 50160 European standard is generally used as a basis for the voltage quality. There is currently no standard for the current quality at the point of common coupling (PCC), but only for equipment. The interaction between the voltage and current makes it hard to draw a line between the customer as "receiving" and the network company as "supplying" a certain level of power quality.
The voltage quality (for which the network is often considered responsible) and the current quality (for which the customer is often considered responsible) affect each other in mutual interaction.

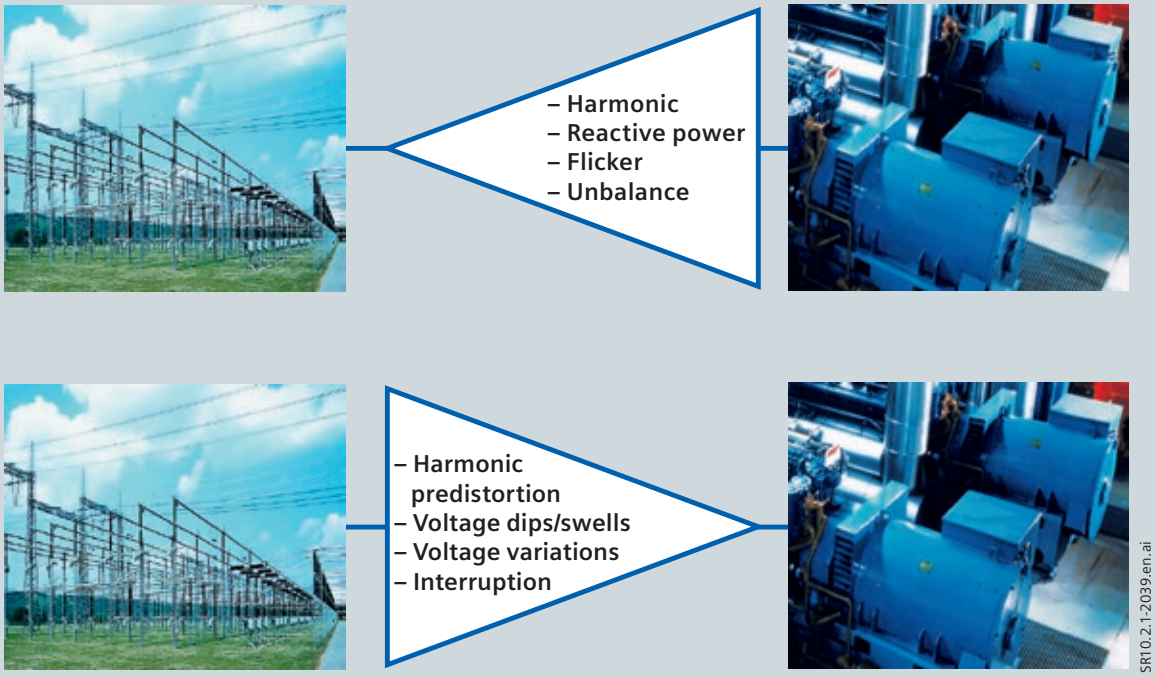

Fig. 4/1 Utility and industries, both are responsible for voltage quality

Power quality monitoring applications
One of the keys to the success of profiling and defining the power quality system is understanding the applications. The following table suggests two applications based on gathering power quality data.
Regulatory application for continuous analysis and explanatory application for detailed data for event evaluation proposals.

PQ application	Description	Hardware	Measurements	
Regulatory power quality:	Regulative PQ analysis approaches the comparison of the quality of voltage or power with recognized standards (e.g. EN 50160) or with the quality defined in power supply contracts. Periodically produces compliance reports.	Power Quality Recorders (mainly Class A)	Voltage quality parameters (at least) at selected system interfaces and customer supply points (e.g. EN 50160) for: Power system performance, planning levels (i.e. internal objectives), specific customer contracts	 SR10.2.1-2040.en.tif
Explanatory power quality:	Explanatory PQ analysis to provide an understanding of what is going on in particular cases, such as fault analysis, to support the wider aspects of system stability. It is a process that aims to document selected, observed power quality and maximize the level of understanding, possibly including knowledge of the cause and consequences and possible mitigation of power quality problems.	Power Quality Recorders Class A, S or B and fault recorder / PMU	$V+I_{rms}$, waveforms, status of binaries, power swing, MV transformers, busbars and loads	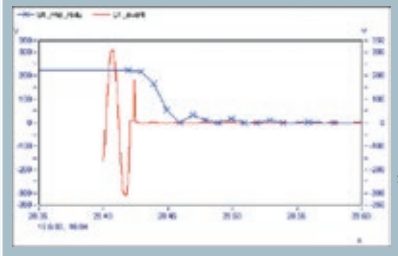 SR10.2.1-2040.en.tif

Table 4/2 Power quality applications

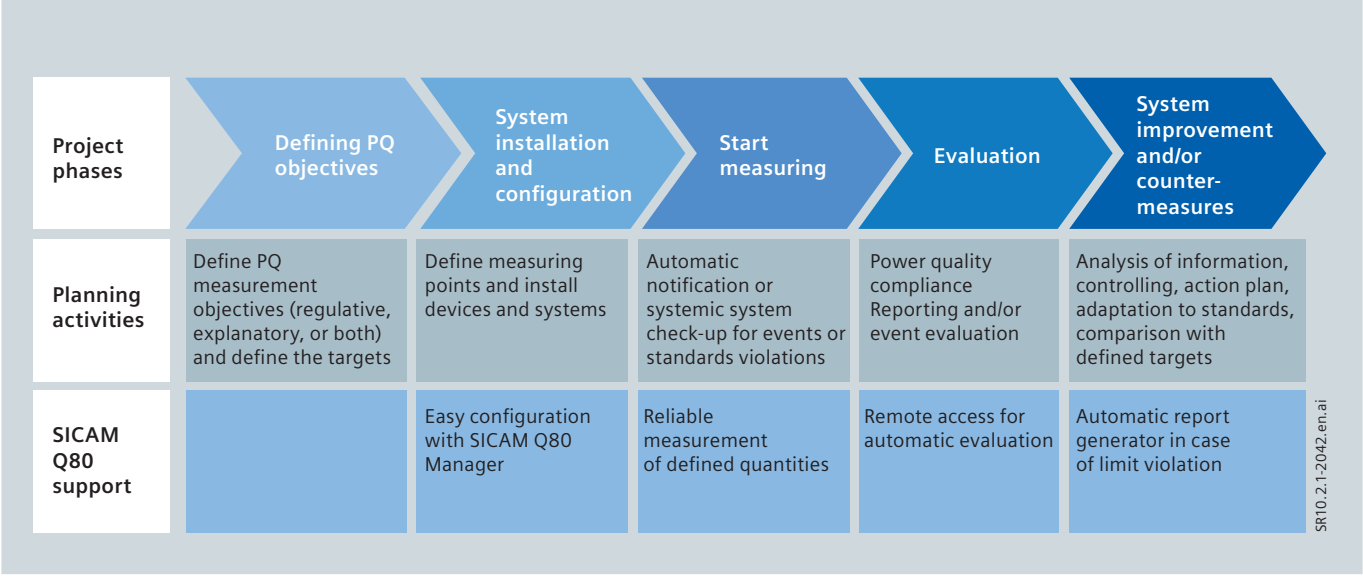

Fig. 4/2 Power quality recording in five steps

Standards

Standards and specifications

The purpose of power quality indexes and measurement objectives is to characterize power system disturbance levels. Such indexes may be defined as "voltage characteristics" and may be stipulated in a grid code that applies to electrical system interfaces. Power quality grid codes make use of existing standards or guidelines defining voltage and current indexes to be applied to interfaces in low, medium, or high-voltage systems, for example, EN 50160. This standard defines and describes the main characteristics of the voltage at the customer's supply terminals in public LV and MV electricity distribution systems. Indexes for HV-EHV will also be described in the new edition of EN 50160.

Since electrical systems among regions and countries are different, there are also many other regional or national recommendations, defining specific or adapted limit values. These local standards are normally the result of practical voltage quality measurement campaigns or the system experience, which are mostly acquired through a permanent and deep electrical system behavior know-how. Measuring according to EN 50160 is, however, only part of the power quality measurement process. Another important standard for power quality measurement is IEC 61000-4-30, that defines the measurement methodology. From IEC 61000-4-30, also accuracy classes, Class A "higher accuracy" and Class S "lower accuracy", are derived. In other words, in a simple way, if EN 50160 defines "what" to measure, IEC 61000-430 defines "how" to measure it.

The end result of a measurement process is expected to be a fully automated, standard compliant documentation of all measurements.

Calculation of r.m.s. values after every half period is the touchstone of an IEC 61000-4-30 Class A measurement device. To define the range of normal voltage states, a hysteresis range is specified for event detection.

SICAM Q80 meets the precision requirements for a Class A measurement device according to the IEC 61000-4-30 standard.

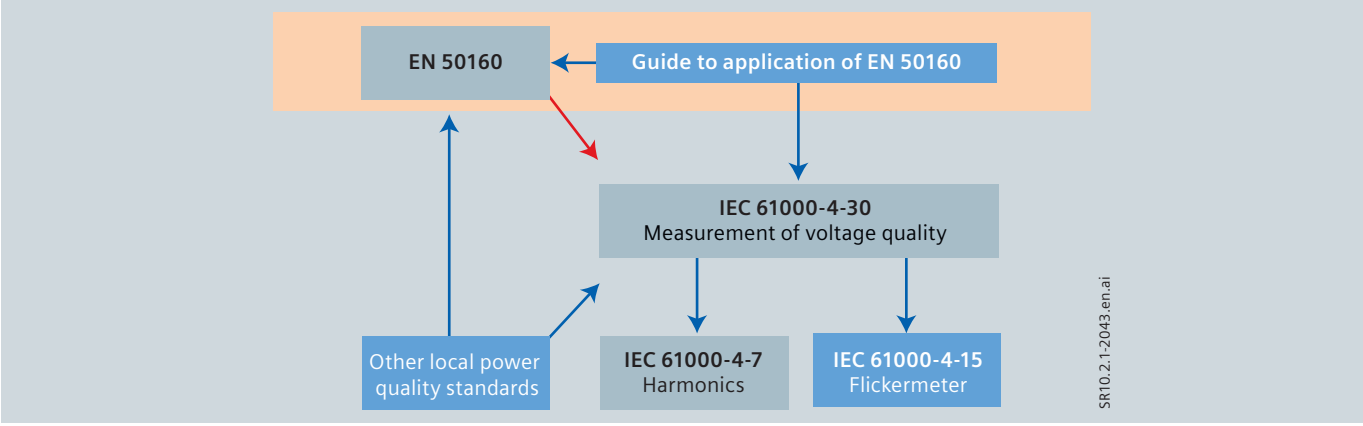

Fig. 4/3 Overview of international and national standards for power quality

Parameter	Supply voltage characteristics
Power frequency	LV, MV: Mean value of fundamental measured over 10 s ± 1 % (49.5 – 50.5 Hz) for 99.5 % of week – 6 % / + 4 % (47 – 52 Hz) for 100 % of week
Voltage magnitude variations	LV, MV: ± 10 % for 95 % of week, mean 10 minutes r.m.s. values (Fig. 3/4)
Rapid voltage changes	LV: 5 % normal, 10 % infrequently, $P_{lt} \leq 1$ for 95 % of week MV: 4 % normal, 6 % infrequently, $P_{lt} \leq 1$ for 95 % of week
Supply voltage dips	Majority: Duration < 1 s, depth < 60 %. Locally limited dips caused by load switching on: LV: 10 – 50 %, MV: 10 – 15 %
Short interruptions of supply voltage	LV, MV: (up to 3 minutes) few tens – few hundreds / year, duration 70 % of them < 1 s
Long interruption of supply voltage	LV, MV: (longer than 3 minutes) < 10 – 50 / year
Temporary power frequency overvoltages	LV: < 1.5 kV r.m.s. MV: 1.7 VC (solid or impedance earth), 2.0 V_C (unearthed or resonant earth)
Transient overvoltages	LV: Generally < 6 kV, occasionally higher; rise time: µs to ms, MV: Not defined
Supply voltage unbalance	LV, MV: Up to 2 % for 95 % of week, mean 10 minutes r.m.s. values, up to 3 % in some locations
Harmonic voltage / THD	Harmonics LV, MV; THD
Interharmonic voltage	LV, MV: Under consideration

Table 4/3 Overview of EN 50160 parameters as well as some supply voltage characteristics and indicative values

Standards

IEC 61000-4-30:
Power Quality Measurement Methods: This standard defines the methods for measurement and interpretation of results for power quality parameters in AC supply systems.

IEC 61000-4-15:
Flickermeter, Functional and Design Specifications: This section of IEC 61000 provides a functional and design specification for flicker measuring apparatus intended to indicate the correct flicker perception level for all practical voltage fluctuation waveforms.

IEC 61000-4-7:
General Guide on Harmonics and Interharmonics: This is a general guide on harmonics and interharmonics measurements and instrumentation, for power supply systems and equipment connected thereto.

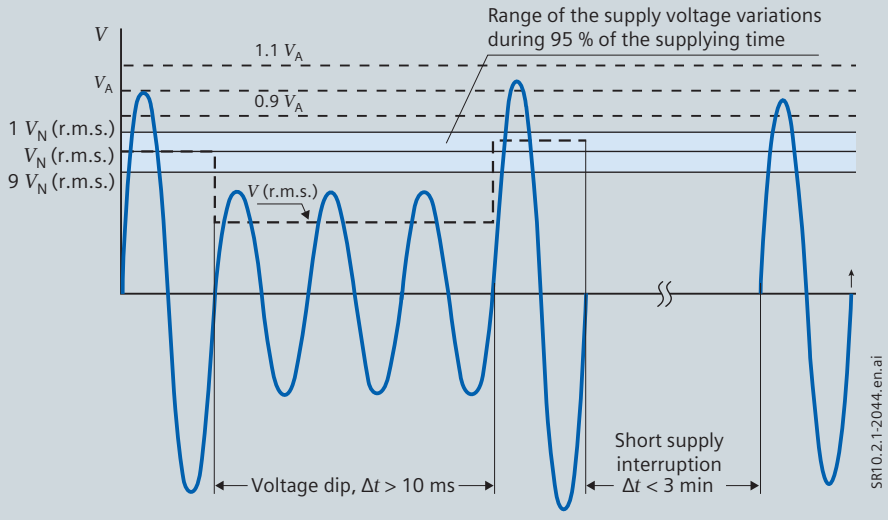

Fig. 4/4 Illustration of a voltage dip and a short supply interruption, classified according to EN 50160; V_N – nominal voltage of the supply system (r.m.s.), V_A – amplitude of the supply voltage, V(r.m.s.) – the actual r.m.s. value of the supply voltage

Odd harmonics				Even harmonics	
Not multiples of 3		Multiples of 3			
Order h	Relative voltage (%)	Order h	Relative voltage (%)	Order h	Relative voltage (%)
5	6	3	5	2	2
7	5	9	1.5	4	1
11	3.5	15	0.5	6 ... 24	0.5
13	3	21	0.5		
17	2				
19	1.5				
23	1.5				
25	1.5				

Table 4/4 Values of individual harmonic voltages at the supply terminals for orders up to 25, given in percent of V_N

Measurement points

Definition of a measurement point and power quality measurement objectives

Power quality measurements address the aspect of power performance by describing the quality of every individual interface in an electrical system and in the networks of its various customers. Identifying, defining, profiling the power quality measurement points are essential tasks in defining a power quality project. However, the electrical system is dynamic by nature, so optimizing the measurement points is a routine that is developed by day-to-day learning. This may not help predict changes, but will permit a more effective response to them.

Identification of measurement points

Measurement points may be located and defined as shown in table 3/5.

Measuring power quality requires not only an effective choice of measurement points, but also defined objectives for the PQ analysis at the measurement points.

We generally classify "power quality" monitoring as a mixture of data gathering technologies classified by their purpose or application.

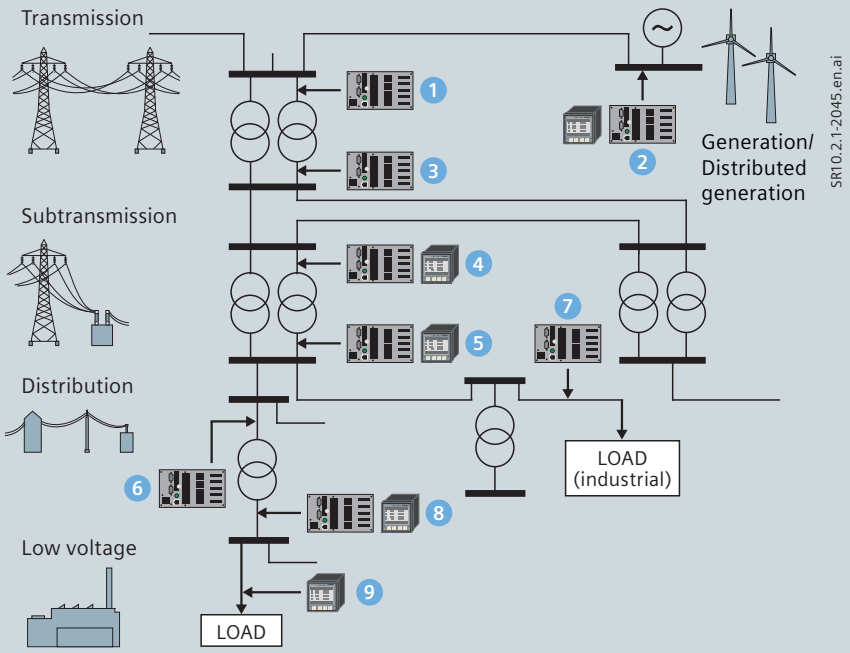

Fig. 4/5 General system online diagram

No.	Measurement points	Location
1	Transmission feeder (line or transformer)	Possibly busbar
2	Generation station / distributed generation	Busbar, transformer or generator connection
3	Subtransmission, line supply	Busbar (e.g. where the busbar is owned and operated by the transmission company)
4	Subtransmission feeder (line or transformer)	Remote line terminals (e.g. where the lines are owned and operated by the transmission company)
5	Distribution, line supply	Transformer secondary side or cable to neighbor's substation
6	Distribution feeder (line or transformer)	Step-down transformers
7	Distribution load	Step-down transformers (e.g. where the transformers are owned by the distribution company)
8	LV supply	Transformer of the distribution company
9	LV load	Load or transformer at the customer

Table 4/5 Measurement points and system location

SIEMENS



Power Quality devices for all applications

SICAM P855 Power Monitoring Device and Power Quality Recorder

siemens.com/powerquality

Contents – SICAM P855

	Seite
Description	4/11
Function overview	4/13
Setup and display	4/16
Data availability	4/17
Measurement system according to IEC 61000-4-30 Ed. 2	4/18
Recorder functions and applications	4/19
Voltage quality – evaluation and reporting	4/21
Measurement uncertainty / accuracy	4/22
Connection types and connection examples	4/23
Variants and dimensions	4/25
Technical data	4/27
Technical data, selection and ordering data	4/31

Description

The SICAM P855 multifunctional device is used to collect, display and transmit measured electrical variables such as AC current, AC voltage, power types, harmonics, etc. The measurands and events are collected and processed according to the Power Quality Standard IEC 61000-4-30. The communications interfaces can be used to output the measurands to a PC and the control center or display them on a display.

In addition to the monitoring function, the SICAM P855 all-in-one device also provides a combined recording and evaluation function. It can record measurands at programmable time intervals, using a wide range of recorders, such as power quality and fault recorders. Long-term data and events are evaluated directly in the device according to the power quality standards (such as EN 50160) and output as reports.

Applications

SICAM P855 device is used in single-phase systems, three-phase systems and four-phase systems (with neutral conductors). They are used primarily in power utilities but also in other industrial and commercial applications.

The web server integrated into the device is used to configure the parameters and output measured values via HTML pages on a connected PC / laptop. In devices with displays, the parameters can also be configured with the function keys on the front of the device, and the measured values can be output to the display. The output variables can also be transmitted to control or other systems such as SICAM PQS V8.01 via the communications interfaces (Ethernet, e.g., IEC 61850) in the form of digital data.



Fig. 4/6 SICAM P855

Key features

- Robust and compact design according to IEC 62586-1, Class S (leading standard)
- Use of SICAM P850 / P855 in the IT, TT and TN power systems
- Ethernet communication via the Modbus TCP or IEC 61850 Edition 2 protocol; serial communication via Modbus RTU and IEC 60870-5-103 via the RS485 interface is optional
- External time synchronization via the Network Time Protocol (NTP)
- The measurands and events are detected according to the Power Quality Standard IEC 61000-4-30. The measurement system corresponds to Class A. In terms of functional scope, measuring ranges and accuracy, SICAM P850 / P855 are Class S devices.
- Additional measurands: Minimum / mean / maximum values, flicker, event detection, voltage dips (Udip), voltage interruptions and overvoltages (swells)
- Events are evaluated directly in HTML via the integrated web server
- 2-GB memory for recording recorder data
- Evaluations: Power quality reports and online viewer output directly on the HTML page
- Data export: PQDIF and COMTRADE data.

Description

SICAM P855 system view

SICAM P855 can communicate flexibly with automation systems and evaluation stations via open protocols such as IEC 61850 and Modbus TCP.

With the SICAM P855, power quality and event recordings can be exported in open data formats such as PQDIF and COMTRADE in the form of error recordings. They are available directly from the device in the form of HTML pages on a connected PC. Additional programs such as SICAM PQS / SIGRA and COMTRADE Viewer provide other evaluation and reporting functions for SICAM P855.

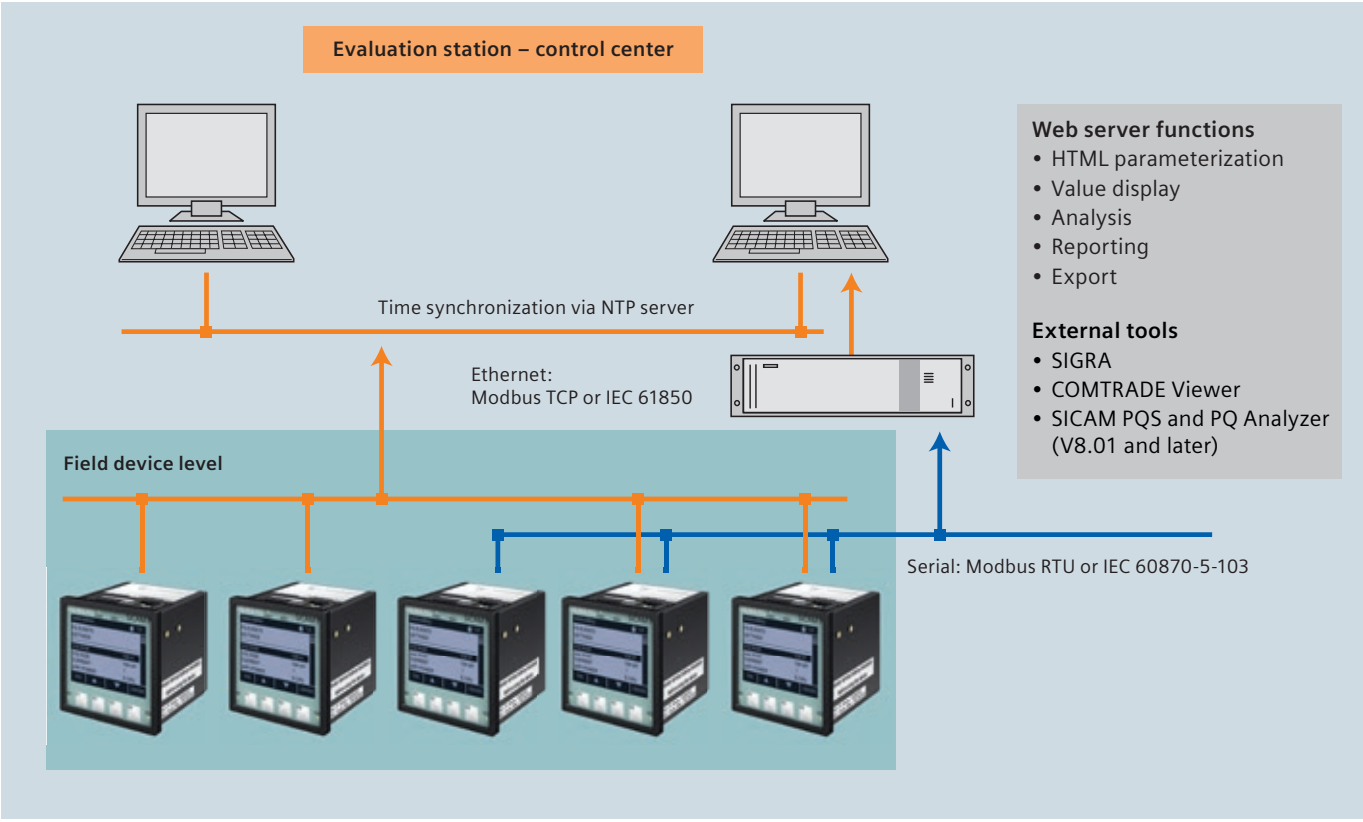

Fig. 4/7 Sample application


Analysis with SICAM P855
Evaluation of voltage quality and reporting based on EN 50160 for SICAM P855
Parameterization with SICAM P850 and P855
PQDIF and COMTRADE export with SICAM P855
Visualization with SICAM P850 and P855

Function overview

Device

SICAM P855 is designed as panel flush-mounted device with a graphical display for displaying measured values and parameterization: SICAM P855 (7KG850xxx). SICAM P855 is also available as DIN rail devices without displays.

Ethernet communication uses the Modbus TCP or IEC 61850 communication protocol. Serial communication is optionally available with an RS485 interface via Modbus RTU or IEC 60870-5-103.
The front protection class is IP20 for DIN rail devices without displays. Devices for panel flush mounting with displays have protection class IP40 or IP51.

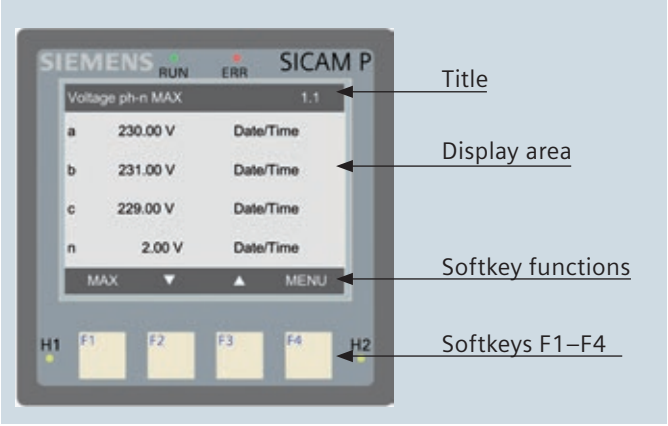

Fig. 4/8 Display and softkeys

Hardware design

SICAM P855 contains the following electrical modules, depending on the device variant:

- Digital signal processor (DSP)
- Display and softkeys
- 4 inputs for AC voltage measurements
- 3 inputs for AC current measurements
- 2 binary outputs
- Power supply
- Ethernet interface
- RS485 interface (depending on variant ordered).

Measurands

The following measurands are collected or calculated by the device from the measured variables:

- True RMS AC voltage and AC current
- 2,048 sampled values, 10 / 12 periods
- Effective value measurement (TRMS) up to 100th harmonic
- Line frequency
- Active, reactive and apparent power
- Active, reactive and apparent energy
- Power factor and active power factor
- AC voltage and AC current unbalance
- Harmonics of AC voltage and AC current are stored up to the 40th order for evaluation
- THD (Total Harmonic Distortion) of AC voltage and AC current
- Phase angle
- Flicker.

SICAM P855 recorder functionality

Both measurands and events can be recorded at different time intervals. The SICAM P855 device provides the following functions:

- **Measurand recorder**
  Records PQ measurands (voltage values, frequency, harmonics, flicker) and non-PQ measurands (e.g., current or power); the measurands and events are detected according to the power quality standards IEC 61000-4-30, IEC 61000-4-7 and IEC 61000-4-15
- **Trend recorder**
  Long-term recording and monitoring of effective values (1 / 2 periods) of voltage and optionally current
- **Fault recorder**
  Records voltage or current dips, swells and interruptions over a parameterized time segment within programmable tolerance ranges
- **Event recorder**
  Records voltage, frequency and voltage unbalance events according to a selectable standard, such as EN 50160.

The device has a 2-GB memory for recording the recorder data. The stored data can be exported manually in COMTRADE or PQDIF format (IEEE standard 1159.3) or transmitted via IEC 61850.

Communication

An Ethernet interface and an optional RS485 interface are available for communicating with the control center and other process automation systems. The RS485 interface supports the transmission of operating measured values, counts and messages. The Modbus RTU or IEC 60870-5-103 communication protocol can be used, depending on the device variant.
The device parameterization, transmission of measured data, counts and messages / events as well as time synchronization with the Network Time Protocol (NTP) are supported over Ethernet.

The SICAM P850 and P855 devices support the transmission of operating measured values with the two Ethernet protocol options – via both Modbus TCP and IEC 61850.
With SICAM P855, it is also possible to transmit voltage events via Modbus TCP. The power quality data can also be exported via IEC 61850 (as standard PQDIF / COMTRADE data).

Time synchronization

The devices need to have the date and time during operation for all time-relevant processes. SICAM P855 therefore uses time synchronization while communicating with peripheral devices to guarantee a common time basis and to permit time stamping of the process data. The following types of time synchronization can be carried out:

- **Time synchronization via Ethernet NTP (preferred)**
  SICAM P850 has an SNTP client (Simple Network Time Protocol) that can be connected to two NTP servers (Network Time Protocol) for external time synchronization: the primary and secondary (redundant) NTP servers.

- **External time synchronization via the field bus**
  using the Modbus RTU or IEC 60870-5-103 communication protocol
- **Real Time Clock (RTC)**
  If external time synchronization is not possible, data can be synchronized with the time pulse of an internal clock.

LED signaling

SICAM P855 automatically monitors the functions of its hardware / firmware components. LEDs signal the current device status.

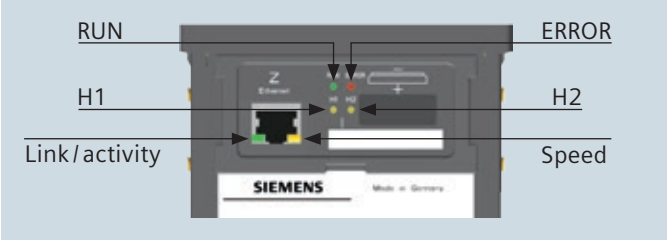

Fig. 4/9 LED indicators

Display and softkeys

All SICAM P855 models can be operated via HTML pages, using a connected PC. Devices with displays can also be operated using the function keys on the front of the display.

On panel flush-mounted devices, the front of the display accommodates four keys and four LEDs located at the bottom of the display. Of these LEDs, H1, H2 and ERROR can be parameterized. The ERROR LED can be parameterized only for error messages. Parameter settings, measured values and graphics are displayed on the screen.

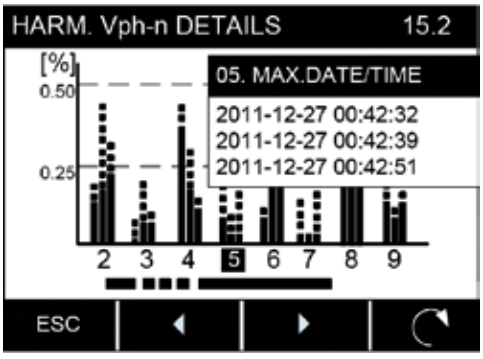

Fig. 4/10 Harmonics display

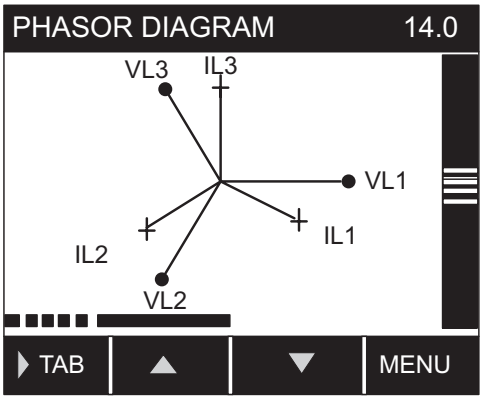

Fig. 4/11 Phasor diagram

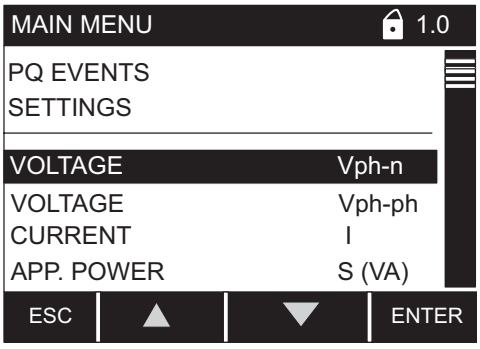

Fig. 4/12 Menu for displaying PQ events

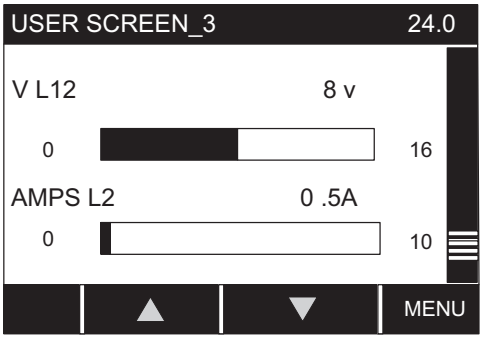

Fig. 4/13 User-defined view

Setup and display

Parameterization and visualization

All SICAM P850/P855 devices are operated from a connected PC. An internal web browser with HTML pages is generally used for parameterization.



Fig. 4/14 Parameterizing the process connections

Visualizing values

Depending on which operating parameters are selected, the input/output window displays measured values with the corresponding measurement units or a tabular list that is updated every 5 seconds.

- Operating measured values
- Voltage harmonics
- Current harmonics
- Power and energy
- Binary outputs
- Limit values
- Group indications
- Flicker.

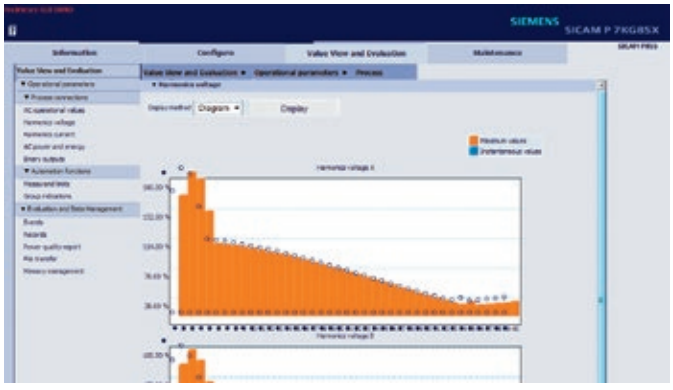

Fig. 4/15 Graphical display of harmonics

Automation functions

Upper and lower limit values can be parameterized for up to 16 measured values. Alerts can be output if these limit values are exceeded. Up to four limit value violations are output on the device via the two binary outputs as well as the H1 and H2 LEDs. In addition, all 16 limit value violations can be sent to peripheral devices via Ethernet.

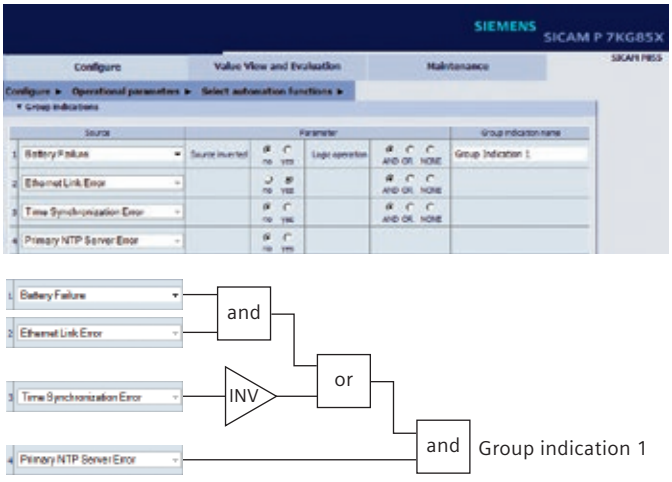

Fig. 4/16 Linking alerts to a group indication

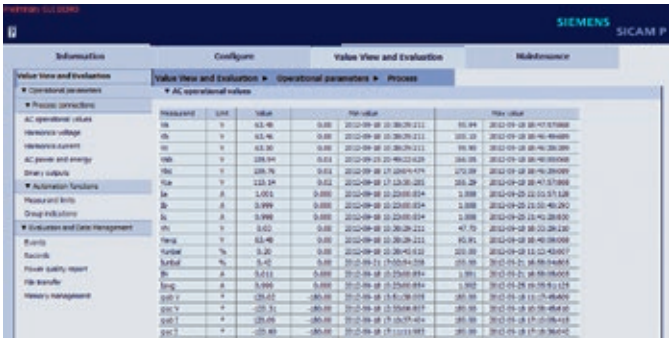

Fig. 4/17 Visualizing operating measured values

Other maintenance tasks, such as outputting operating logs and error messages as well as firmware updates, can also be carried out via the HTML pages.

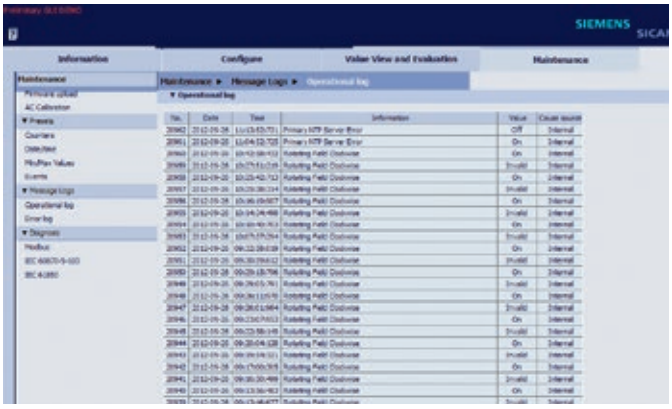

Fig. 4/18 Visualizing operating logs

Data availability of the operating measurands

	Data	Operating measured values (10/12 cycle)	Event evaluation (dips, swells, interruptions)	Fault recorder	Trend recorder (1/2 period RMS event recording)	Measurand recorder (30 s, 60 s, 10 min, 15 min, 30 min, 1 h, 2 h)		
	Interface	Modbus TCP, Modbus RTU, IEC 60870-5-103, IEC 61850, HTML and display	Modbus TCP, IEC 61850, HTML and display	IEC 61850, HTML	IEC 61850, HTML	– IEC 61850 protocol (PQDIF – depending on measuring interval) – Modbus TCP protocol		
	Type	Values	Values	COMTRADE	PQDIF	Mean values	Max. values	Min. values
AC Voltage	$U_{L1, L2, L3}$	x	x[1]	x	x	x	x	x
	$U_{L12, 23, 31}$	x	x[1]	x	x	x	x	x
	U_N	x				x	x	x
	U_{sum}	x				x		
	U_{unsym}	x				x	x	x
AC Current	$I_{L1, L2, L3}$	x		x		x	x	x
	I_0	x				x		
	I_{sum}	x				x		
	I_{unsym}	x				x	x	x
Active Power Factor	cos φ (L1), (L2), (L3)	x				x	x	x
	cos φ	x				x	x	x
Power Factor	PF_{L1}, PF_{L2}, PF_{L3}	x				x	x	x
	PF	x				x	x	x
Phase Angle	$φ_{L1}$, $φ_{L2}$, $φ_{L3}$	x				x	x	x
	φ	x				x	x	x
Frequency	f (System freq.)	x						
	10s-Freq (10-Freq.)					x[2]	x[2]	x[2]
Harmonics, Voltage, Magnitude	H_U_{L1-x}, U_{L2-x}, U_{L3-x} (x = 1 to 40)	x				x	x	
Harmonics, Current, Magnitude	H_I_{L1-x}, H_I_{L2-x}, H_I_{L3-x} (x = 1 to 40)	x				x	x	
THD, Voltage	THD_U_{L1}, THD_U_{L2}, THD_U_{L3}	x				x	x	x
THD, Current	THD_I_{L1}, THD_I_{L2}, THD_I_{L3}	x				x	x	x
Flicker (short)	P_{st1}, P_{st2}, P_{st3}					x[3]	x[3]	x[3]
Flicker (long)	P_{lt1}, P_{lt2}, P_{lt3}					x[4]	x[4]	x[4]
Active Power	P_{L1}, P_{L2}, P_{L3}	x				x	x	x
	P	x				x	x	x
Reactive Power	Q_{L1}, Q_{L2}, Q_{L3}	x				x	x	x
	Q	x				x	x	x
Apparent Power	S_{L1}, S_{L2}, S_{L3}	x				x	x	x
	S	x				x	x	x
Active Energy – Supply	WP_{L1}, WP_{L2}, WP_{L3}_Supply	x						
	WP_Supply	x						
Active Energy – Demand	WP_{L1}, WP_{L2}, WP_{L3}_Demand	x						
	WP_Demand	x						
Reactive Energy – Inductive	WQ_{L1}, WQ_{L2}, WQ_{L3}_Inductive	x						
	WQ_Inductive	x						
Reactive Energy – Capacitive	WQ_{L1}, WQ_{L2}, WQ_{L3}_Capacitive	x						
	WQ_Capacitive	x						
Apparent Energy	WS_{L1}, WS_{L2}, WS_{L3}	x						
	WS	x						

Table 4/6 Data availability

[1] Event information according to EN 50160, for example (Dip, swell, interruption).
[2] Frequency is permanently defined with a 10-second mean value recording.
[3] IEC 61850: Flicker P_{st} is permanently defined with a 10-minute recording.
[4] Flicker P_{lt} is permanently defined with a 2-hour recording.

Measurement system according to IEC 61000-4-30 Ed. 2

Functions of the measurement system
SICAM P855 is a device for measuring voltage quality according to IEC 61000-4-30 Ed. 2 and other measurands in single-phase or multi-phase supply systems. The measurement system is implemented according to Class A. In terms of functional scope, measuring ranges and accuracy, SICAM P855 devices are Class S measuring devices.

The basic measuring interval for determining the values of the variables (mains voltage, mains voltage harmonics and mains voltage unbalance) is a 10-period time interval for 50-Hz supply systems and a 12-period time interval for 60-Hz supply systems. The 10/12-period measurement is resynchronized to each RTC 10-minute limit.

The values for the 10/12-period time intervals are aggregated over additional time intervals.

10-minute interval
The value aggregated in a 10-minute interval is tagged with the absolute time (e.g., 01:10:00). The time is indicated at the end of the 10-minute aggregation as a time qualifier. The values for the 10-minute time interval are calculated without interruption from the 10/12-period time intervals.

Tagging concept
During a voltage dip, swell or interruption, the measurement method may supply implausible values for other measurands (e.g., frequency measurement, voltage harmonics). The tagging concept therefore prevents an individual event from being accounted for multiple times for different measurands (e.g., an individual undervoltage as an undervoltage and simultaneously as a frequency change).

Measurands for evaluating voltage quality
Mains voltage level: The measurement determines the effective value of the mains voltage over a 10-period time interval for 50-Hz systems and a 12-period time interval for 60-Hz systems. All 10/12-period time intervals are detected without interruption or overlapping.

Voltage events – voltage interruptions, dips and swells:
The basic measurement of the effective value U_{eff} of a voltage event is the determination of the effective value U_{eff} (1/2) for each individual measuring channel. The set threshold values for voltage, hysteresis and duration (t) for each individual measuring channel characterize one voltage event.

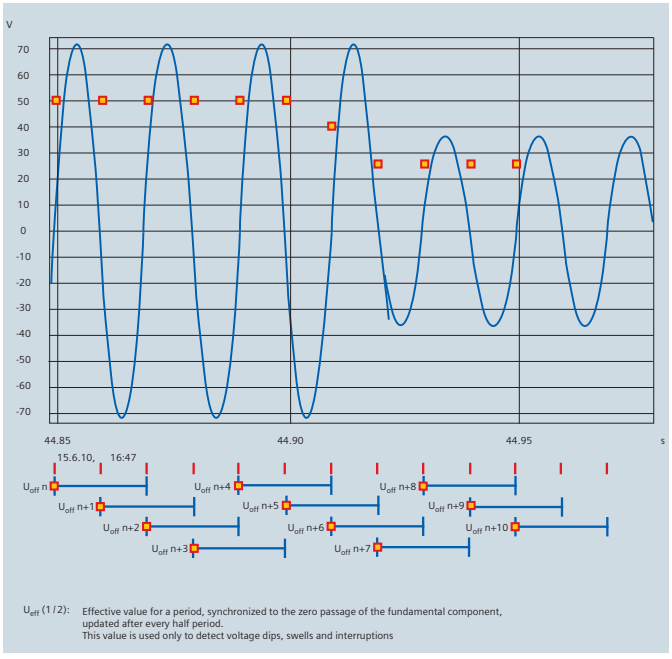

Fig. 4/19 Representation of the measurement system concept, e.g., for a voltage dip

Mains voltage unbalance: Determined on the basis of the method for the symmetrical components. In the case of unbalance, both the positive-sequence component U_1 and the negative-sequence component U_2 are determined.

Mains voltage harmonics: Uninterrupted 10/12-period measurement of a harmonic subgroup $U_{sg,n}$ according to IEC 61000-4-7. The total distortion is calculated as the subgroup total distortion (THDS) according to IEC 61000-4-7. Measurements are performed up to the 40th harmonics order.

Flicker: Uninterrupted detection according to IEC 61000-4-15. The following measurands are determined simultaneously for all three phase voltages: instantaneous flicker strength P_{inst} (10/12 measurement cycle), short-term flicker strength P_{st} (10 min) and long-term flicker strength P_{lt} (2 h).

Recording measured values and events

SICAM P855 provides a variety of recording options for monitoring and analyzing voltage quality.

Measurand recorder

The measurand recorder records not only measured values for determining the power quality but also various other measured values (e.g., minimum / maximum values). The recording of the following measurands can be parameterized in the user interface:

- PQ measurands for determining power quality:
  - Averaging intervals for frequency (permanently set to 10 s)
  - Averaging intervals for voltage, voltage unbalance and harmonics (30 s, 60 s, 10 min, 15 min, 30 min, 1 h, 2 h)
  - Flicker: Short-term flicker strength P_{st} (10 min) and long-term flicker strength P_{lt} (2 h)
- Additional data: Current, current unbalance, active power, apparent power, reactive power, THD of voltage, THD of current, power factor, active power factor, phase angle, energy values
- Recording of minimum values (mean values)
- Recording of maximum values (mean values).

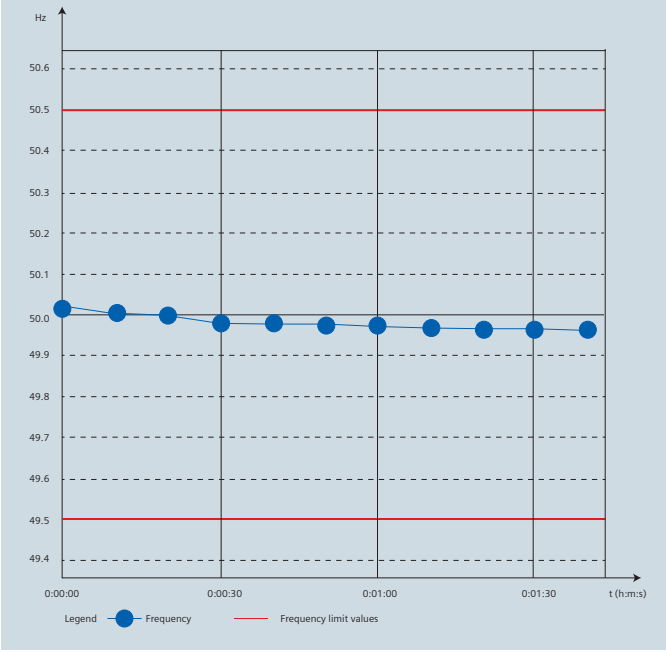

Fig. 4/20 Functions of the PQ recorder: Measuring frequency

The measuring interval can be set in various increments from 30 seconds to 2 hours. The interval for measuring frequency is permanently set to 10 seconds.

Trend recorder

The trend recorder guarantees continuous detection and longtterm monitoring of the voltage U_{eff} (1 / 2). If the measurand changes over the effective value last detected during the parameterized measuring interval, exceeding or falling below the set tolerance range, this new effective value is recorded.

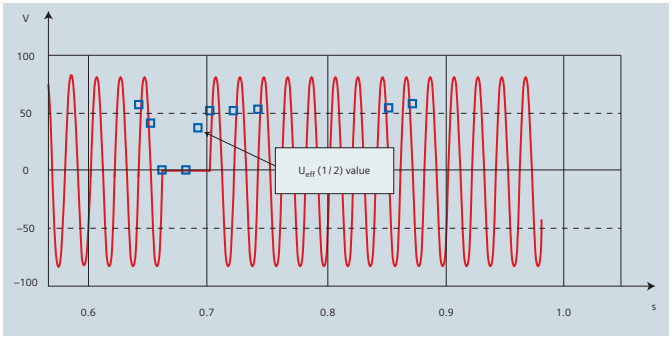

Fig. 4/21 Functions of the trend recorder: Voltage interruption

Event recorder

The event recorder records only PQ events (voltage, frequency and voltage unbalance events).

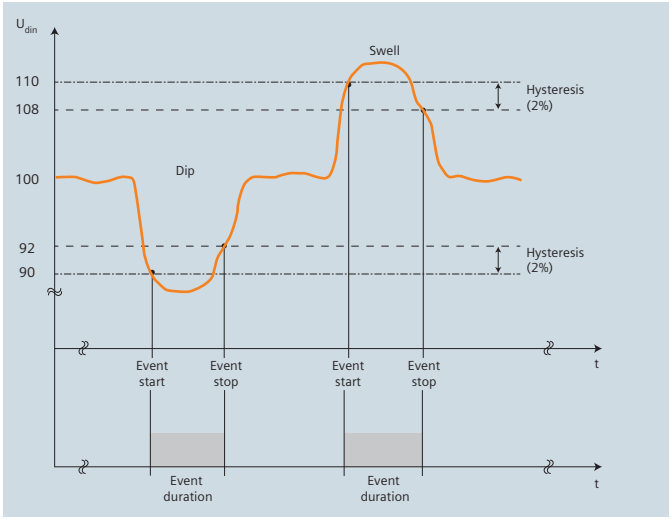

Fig. 4/22 Recording of the event recorder: Voltage swells and dips

Fault recorder

With 2,048 sampled values per 10 / 12 period, the fault recorder records PQ events in programmable time units. The event duration is irrelevant. The current (I_{eff} (1 / 2 period)) can also be recorded. To improve the event analysis, a pretrigger time (pretrigger ratio in %) can be programmed, which allows the history of the measurand to be evaluated prior to fault inception. The agreed input voltage U_{din} is the reference variable for evaluating the faults.

Stored data transmission in SICAM P855

Data stored in the SICAM P855 can be output from the 2-GB memory and transmitted via IEC 61850 or exported or downloaded manually via HTTP. The following data formats are supported:

- COMTRADE (fault recorder data)
- PQDIF (measured value recorder and trend recorder data).

Recorder functions and applications

Recordings and applications

Recording	Measurands	Storage interval/storage method	Application
Measurand recorder	Frequency	10 s (permanently set)	Long-term monitoring of power quality according to EN 50160 (10 min) and energy and power output monitoring (15 min)
	Flicker	P_{st} (10 min), P_{lt} (2 h)	
	Mains voltage level	30 s, 60 s, 10 min, 15 min, 30 min, 1 h, 2 h (2,048 sampled values per 10/12 period)	
	Mains voltage unbalance		
	Mains voltage harmonics		
	Additional data (power values, min/max values, etc.)		
Event recorder	Voltage dips, voltage interruptions	Residual voltage U_{eff} (1/2) and time stamp (duration)	Long-term monitoring of the power quality according to EN 50160, classification of voltage events, e.g., ITIC curve
	Voltage swells	Maximum voltage amplitude U_{eff} (1/2) and time stamp (duration)	
Trend recorder	U_{eff} (1/2)	For measured value changes (in percent or absolute) and cyclic (time interval)	Subsequent analysis of power quality (events) using any grid code
Fault recorder	Voltages, currents	Triggered by voltage events, programmable up to 3 s, > 204 sampled values per period	Analysis of the causes of power quality problems

Table 4/7 Recordings and applications

Voltage quality data

SICAM P855 provides additional settings, e.g., for recorder functions, evaluation standards, reporting according to EN 50160 and export functions.

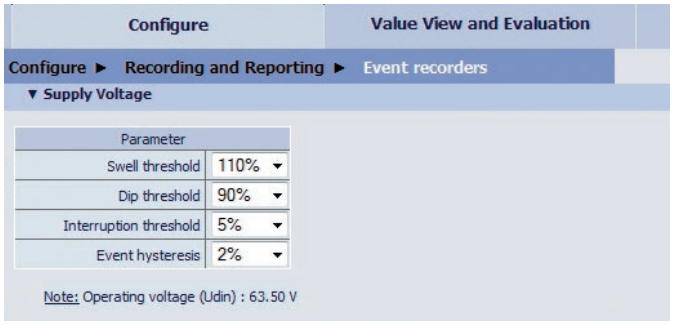

Fig. 4/23 Settings for detecting voltage events

In SICAM P855, the evaluation of the recorded voltage events (e.g., voltage dips, interruptions and swells) as well as the preparation of the power quality report, data transmission and memory management are carried out directly in the device via HTML. A calendar function can be used to set the start and end times for the power quality report; the report can be created, printed, saved and edited directly from the SICAM P855 HTML page.

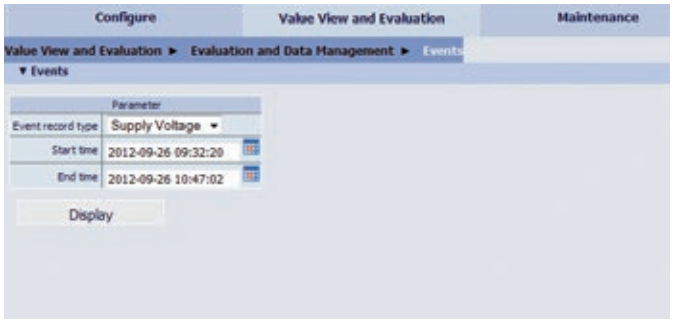

Fig. 4/24 Evaluating voltage events

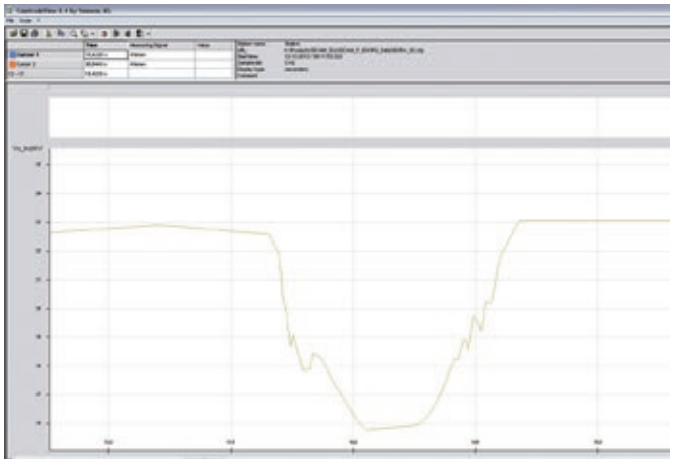

Fig. 4/25 Analyzing voltage events

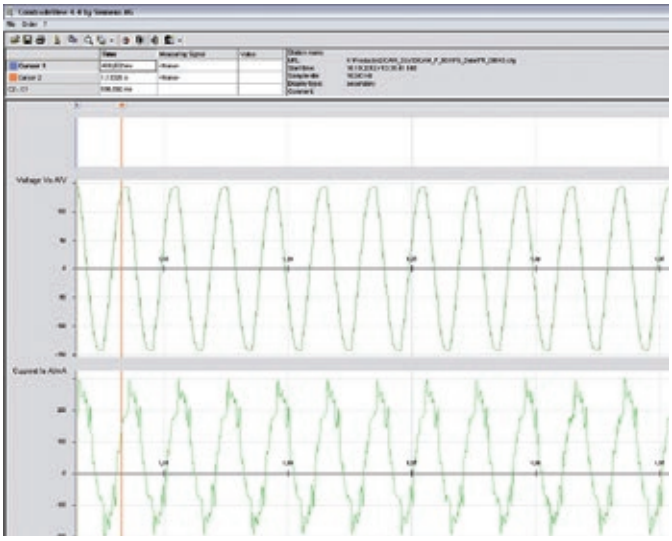

Fig. 4/26 Fault recorder – Recorder with SIGRA or COMTRADE Viewer

Configuring reports

The report configuration function in SICAM P855 allows you to program the PQ threshold values. You can customize the process links to the installation environment and make various settings, e.g., create standardized reports according to EN 50160 LV&MV, EN 50160 HV or create user-defined reports.

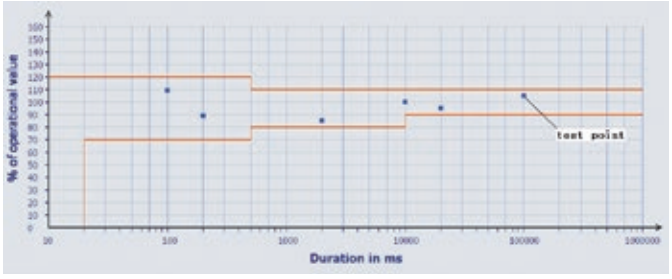

Fig. 4/27 Evaluating voltage events

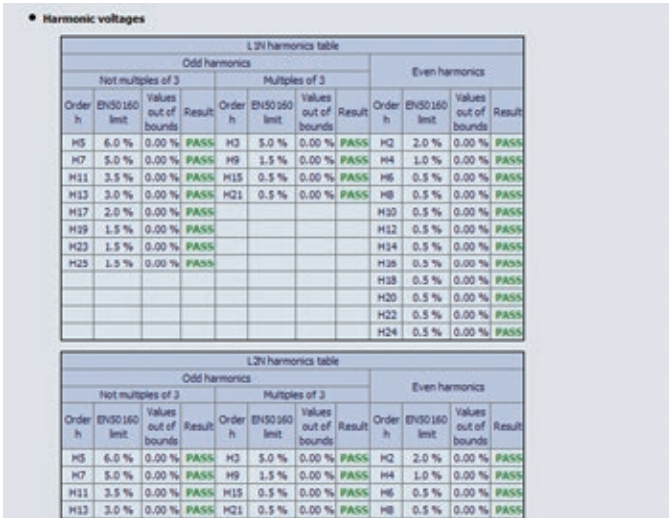

Fig. 4/28 Power Quality report according to EN 50160

Measurement uncertainty / accuracy

Operating measurement uncertainty

Class S and standards IEC 61000-4-30, Ed. 3, IEC 61000-4-7 and IEC 61000-4-15

Measurands and their operating measurement uncertainty according to the IEC 62586-1, Class S product standard

Measurands	Unit	Rated Value	Operat. measurem. uncertainty acc. to IEC 62586-1, Class S
Voltage V_{ph-ph} (delta) Acc. to parameterization	V	AC 110 V AC 190 V AC 400 V AC 690 V max. AC 600 V for UL condition	0.2%
Voltage V_{ph-N} (star) Acc. to parameterization	V	AC 63.5 V AC 110 V AC 230 V AC 400 V max. AC 347 V for UL condition	0.2%
Voltage V_N	V	AC 63.5 V AC 110 V AC 230 V AC 400 V max. AC 347 V for UL condition	0.2%
Voltage unbalance V_{unbal}	%	–	0.2%
Frequency f	Hz	50 Hz (± 7.5 Hz) 60 Hz (± 9 Hz)	50 mHz (see Table Accuracy of the frequency measurement)
Harmonics of voltage H_xV_{ph}	% or V	–	Condition: $V_m \geq 3\%\ V_{rated}$ Maximum error: ± 5% V_m Condition: $V_m < 3\%\ V_{rated}$ Maximum error: ± 0.15% V_{rated}
Flicker (SICAM P855 only) Short-term flicker and long-term flicker	P_{st} and P_{lt}	–	Acc. to class S, IEC 61000-4-30: P_{st}: ± 10%, P_{st}: ± 10%, P_{inst}: ± 10%

Table 4/8 Measurement uncertainty according to IEC 62586-1

Measurands and operating measurement uncertainty according to IEC 61557-12

Measurands	Unit	Rated Value	Operat. measurem. uncertainty acc. to IEC 61557-12[1]
Current I Acc. to parameterization	A	AC 1 A AC 5 A	± 0.2%
Current unbalance I_{unbal}	%	–	± 0.2%
Active power P + demand, – supply	W	–	± 0.5%, 0.2S acc. to IEC 62053-22 / ANSI C12.20
Reactive power Q + inductive, – capacitive	var	–	± 0.5%, 0.5S acc. to IEC 62053-23 / ANSI C12.20
Apparent power S	VA	–	± 0.5%
Power factor PF [2]	–	–	± 1%
Active power factor cos φ [2]	–	–	± 1%
Phase angle φ [2]	Degree	–	± 2°
Active energy WP demand	Wh	–	± 0.5%
Active energy WP supply	Wh	–	± 0.5%
Reactive energy WQ inductive	varh	–	± 0.5%
Apparent energy WS	varh	–	± 0.5%
Total harmonics distortion of voltage THD V_{ph}	%	–	± 0.5%
Total harmonics distortion of current THD I_{ph}	%	–	± 0.5%
Harmonics of current H_xI_{ph}	A	–	Condition: $I_m \geq 10\%\ I_{rated}$ Maximum error: ± 5% I_m Condition: $I_m < 10\%\ I_{rated}$ Maximum error: ± 0.5% I_{rated}

1) Tolerance limits apply to the entire nominal operating range.
2) Measurement of 2 % or more of the nominal value of the apparent power within the selected measuring range.

Table 4/9 Measurement uncertainty according to IEC 61557-12

Accuracy of the frequency measurement

Circuit	Accuracy
Voltage to V_{a-N}	0% to 15% V_{rated}: invalid
	15% to 30% V_{rated}: 40 mHz
	30% to 120% V_{rated}: 10 mHz
Voltage to V_{b-N}	0% to 15% V_{rated}: invalid
	15% to 30% V_{rated}: 40 mHz
	30% to 50% V_{rated}: 30 mHz
	50% to 120% V_{rated}: 20 mHz
Voltage to V_{c-N}	0% to 15% V_{rated}: invalid
	15% to 30% V_{rated}: 40 mHz
	30% to 120% V_{rated}: 10 mHz

Table 4/10 Accuracy of the frequency measurement

SICAM P855 in various power systems
If SICAM P855 is used in the IT, TT and TN power systems, no special operating conditions need to be observed.

Connection types
The possible connection types in SICAM P855 are:
- Single-phase system
- Three-conductor system with equal (balanced) load
- Three-conductor system with any (unbalanced) load (2 current inputs)
- Three-conductor system with any (unbalanced) load (3 current inputs)
- Four-conductor system with equal (balanced) load
- Four-conductor system with any (unbalanced) load.

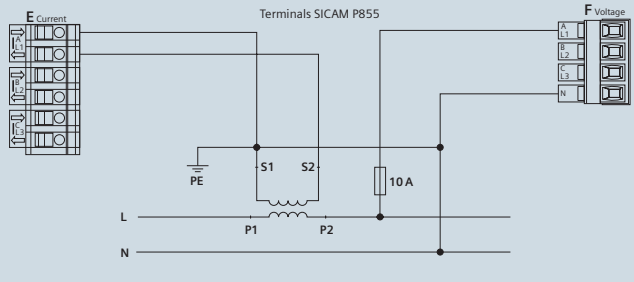

Fig. 4/29 Connection example: single-phase system, 1 voltage converter

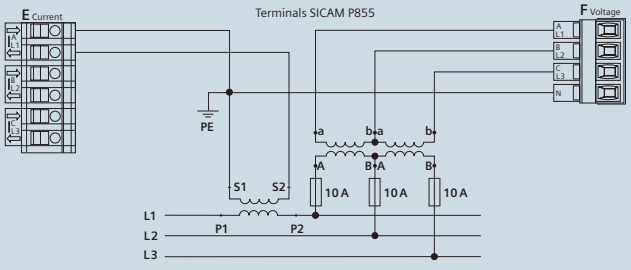

Fig. 4/30 Connection example: three-conductor system, 2 voltage converters and 1 current converter, equal load

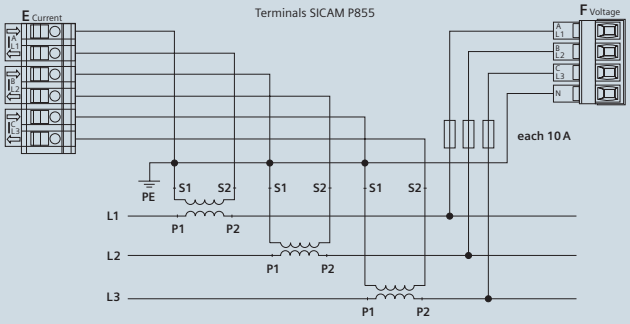

Fig. 4/31 Connection example: three-conductor system, no voltage converter and 3 current converters, any load

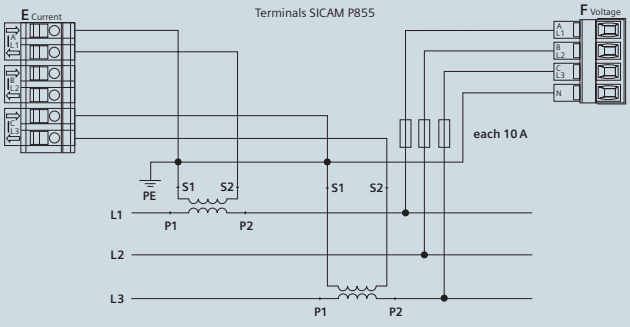

Fig. 4/32 Connection example: three-conductor system, no voltage converter and 2 current converters, any load

4

Connection types and connection examples

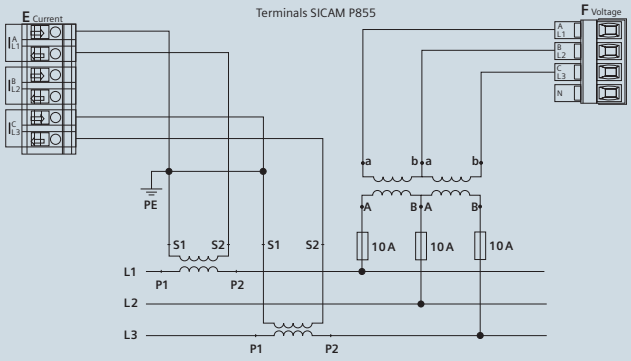

Fig. 4/33 Connection example: three-conductor system, 2 voltage converters and 2 current converters, any load

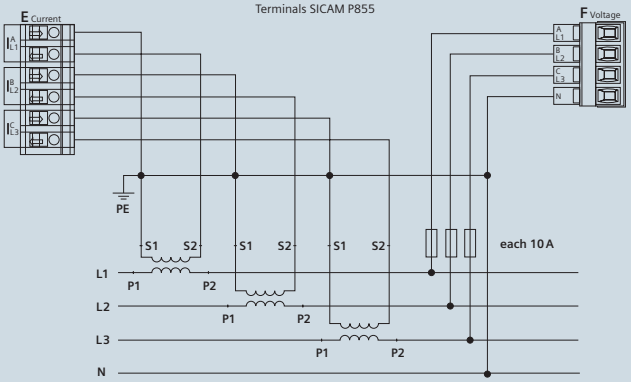

Fig. 4/34 Connection example: four-conductor system, no voltage converter and 3 current converters, any load

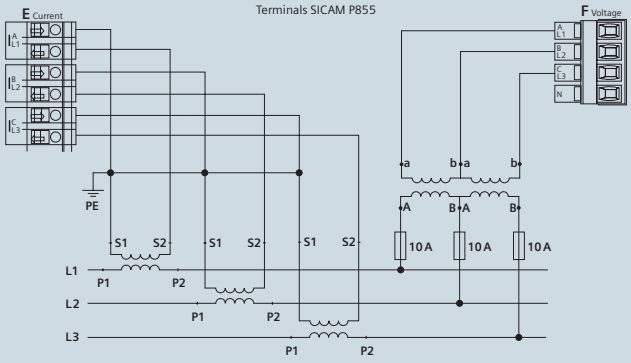

Fig. 4/35 Connection example: three-conductor system, 2 voltage converters and 3 current converters, any load

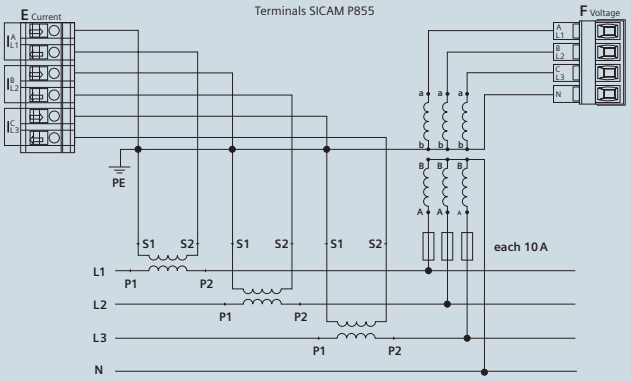

Fig. 4/36 Connection example: four-conductor system, 3 voltage converters and 3 current converters, any load

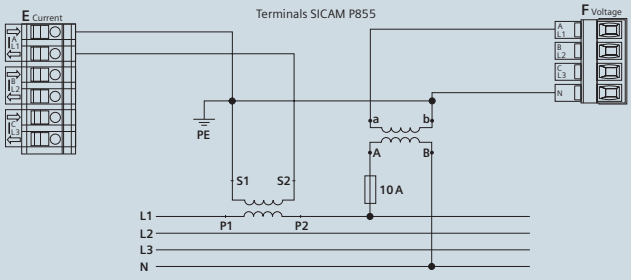

Fig. 4/37 Connection example: three-conductor system, 1 voltage converter and 1 current converter, any load

SICAM P855 variants

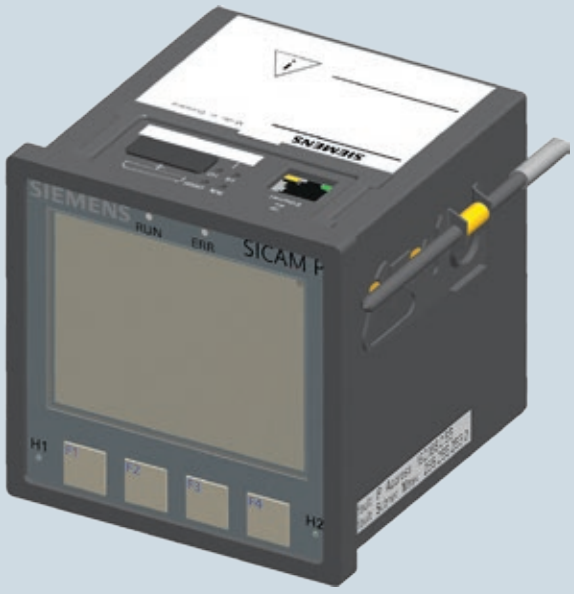

Fig. 4/38 SICAM P855 for panel flush mounting, display side



Fig. 4/39 SICAM P855 for panel flush mounting, terminal side with RS485 interface

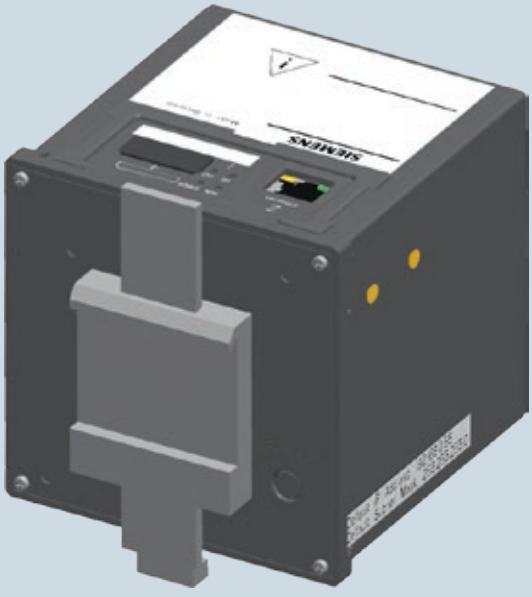

Fig. 4/40 SICAM P855 as a DIN rail device, DIN rail side



Fig. 4/41 SICAM P855 as a DIN rail device, terminal side with RS485 interface

Variants and dimensions

Dimensions

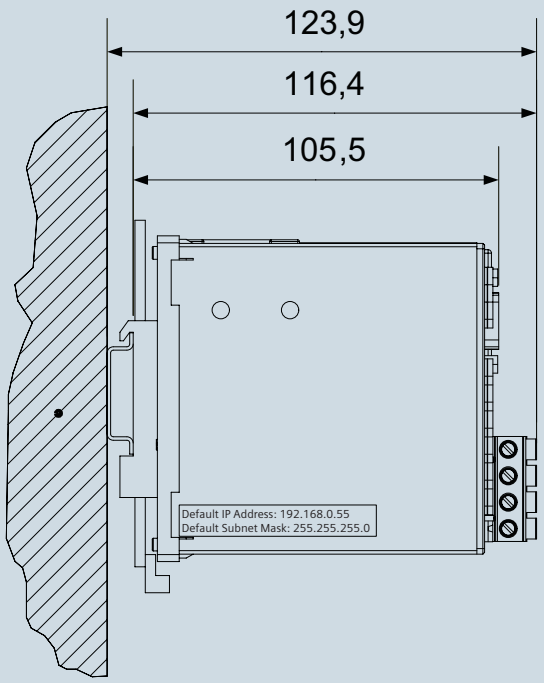

DIN rail mounting

Mass	Device without display: approx. 0.49 kg Device with display, without door: approx. 0.52 kg Device with display and door: approx. 0.6 kg

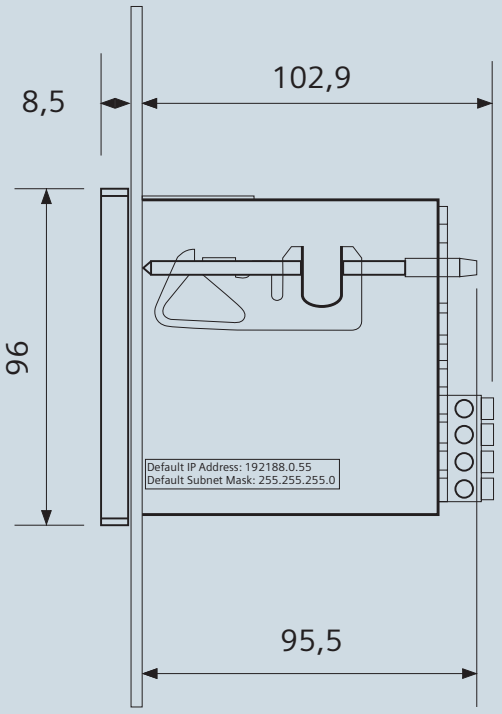

Panel flush mounting

Sectional drawing for panel flush mounting (W x H)	92 (+0.8) mm x 92 (+0.8) mm (+0.8 mm = upper limit dimension)
Dimension (W x H x D)	96 mm x 96 mm x 100 mm 3.78 inch x 3.78 inch x 3.94 inch

Fig. 4/42 Dimensions

Power supply

Direct voltage	
Rated input voltages	24 V to 250 V
Admissible input voltage tolerance	± 20%
Permitted ripple of the input voltage	15%
Maximum inrush current	
At ≤ 110 V	< 15 A
At 220 V to 300 V after 250 µs:	≤ 22 A; after 250 µs: < 5 A
Maximum power consumption	3 W

Alternating voltage	
Rated input voltages	110 V to 230 V
System frequency at AC	50 Hz / 60 Hz
Admissible input voltage tolerance	± 20%
Permitted harmonics at AC 115 V and AC 230 V	2 kHz
Maximum inrush current	
At ≤ 115 V	< 15 A
At 230 V	≤ 22 A; after 250 µs: < 5 A
Maximum power consumption	6 VA

Table 4/11 Power supply

Inputs and outputs

Inputs for alternating voltage measurements (connector block F)	
Rated input AC voltages (parameterizable)	
Phase-N / PE	63.5 V 110 V 230 V 400 V (max. 347 V for UL condition) Operating measurement uncertainty according to IEC 60688: ± 0.1%
Phase-phase	110 V 190 V 400 V 690 V (max. 600 V for UL condition) Operating measurement uncertainty IEC 60688: ± 0.1%
Maximum input AC voltage (depending on the parameterization)	1.2 x rated input AC voltage
Maximum input AC voltage	
Phase-N / PE	480 V (max. 347 V for UL condition)
Phase-phase	831 V (max. 600 V for UL condition)
Input impedances	
a, b, c to N	6.0 MΩ
a-b, b-c, c-a	6.0 MΩ
Further information about the voltage measurement inputs	
Power consumption per input for V_{rated} 400 V	38 mW
Permissible power frequency	42.5 Hz to 69.0 Hz
Measuring error (with calibration) at 23 °C ± 1 °C 50 Hz or 60 Hz	Typically 0.1% for reference conditions according to IEC 60888

Table 4/12 Inputs and outputs

Technical data

Inputs for alternating current measurements (connector block E)	
Input AC currents	
Rated input current range (parameterizable)	1 A 5 A Operating measurement uncertainty according to IEC 60688 ±0.1 %
Max. input current	2x rated input AC current
Power consumption per input	
At 1 A	1 mVA
At 5 A	2.5 mVA
Further information about the current measurement inputs	
Permissible power frequency	42.5 Hz to 69.0 Hz
Max. rated input voltage	150 V
Measuring error (with calibration) at 23 °C ± 1 °C 50 Hz or 60 Hz	Typically 0.1 % at reference conditions
Thermal stability	10 A continuous 100 A for max. 1 s according to IEC 60688

Table 4/13 Inputs for alternating current measurements

Binary outputs (connector block G)	
Maximum switching voltage	
Alternating voltage	230 V
Direct voltage	250 V
Maximum currents	
Maximum pulse current for 0.1 s	300 mA
Further information about the binary outputs	
Internal impedance	35 Ω
Admissible switching frequency	10 Hz
Number of switching cycles	Unlimited

Table 4/14 Binary outputs

Communication interfaces

Ethernet (connector Z)	
Ethernet, electrical	
Connection	Device top side RJ45 connector socket 10/100 Base-T acc. to IEEE802.3 LED yellow: 10/100 Mbit/s (off/on) LED green: – flashing: active – on: not active – off: no connection
Protocols	Modbus TCP IEC 61850 Server
Voltage strength	DC 700 V
Transmission rate	10/100 MBit/s
Cable for 10/100 Base-T	100 Ω to 150 Ω STP, CAT5
Maximum cable length 10/100 Base-T	100 m, if well installed

Table 4/15 Ethernet

Serial interface (connector J), optional		
RS485		
Connection	RS485 port, terminal side, 9 pin D-Sub socket	
Protocol	Modbus RTU (optional)	IEC 60870-5-103 (optional)
Baud rate (adjustable)	Min. 1,200 Bit/s Max. 115,200 Bit/s	Min. 9,600 Bit/s Max. 38,400 Bit/s
Maximum distance of transmission	Max. 1 km (depending on data rate)	
Transmission level	Low: –5 V to –1.5 V High: +1.5 V to +5 V	
Reception level	Low: ≤ –0.2 V High: ≥ +0.2 V	
Bus termination	Not integrated, bus termination using plugs with integrated bus terminating resistors	

Table 4/16 Serial interface

EMC tests for immunity (type tests)	
Standards	IEC EN 61000-6-2 For more standards see also individual functions
Electrostatic discharge, Class III IEC 61000-4-2	6 kV contact discharge; 8 kV air discharge, both polarities; 150 pF; R_i = 330 Ω with connected Ethernet cable
Radio frequency electromagnetic field, amplitude-modulated, Class III IEC 61000-4-3	10 V/m; 80 MHz to 3 GHz 80% AM; 1 kHz
Fast transient bursts, Class III IEC 61000-4-4	2 kV; 5 ns/50 ns; 5 kHz; Burst length = 15 ms; Repetition rate 300 ms; Both polarities; R_i = 50 Ω; Test duration 1 min
High energy surge voltages (SURGE), Installation Class III IEC 61000-4-5	Impulse: 1.2 µs/50 µs
Auxiliary voltage	Common mode: 2 kV; 12 Ω; 9 µF Diff. mode: 1 kV; 2 Ω; 18 µF
Measuring inputs, binary inputs and relay outputs	Common mode: 2 kV; 42 Ω; 0.5 µF Diff. mode: 1 kV; 42 Ω; 0.5 µF
HF on lines, amplitude-modulated, Class III IEC 61000-4-6	10 V; 150 kHz to 80 MHz; 80 % AM; 1 kHz
Power system frequency magnetic field IEC 61000-4-8, Class IV	30 A/m continuous; 300 A/m for 3 s
1 MHz test, Class III, IEC 61000-4-18	2.5 kV (peak); 1 MHz; τ = 15 µs; 400 surges each s; Test duration 1 min; R_i = 200 Ω

Table 4/17 EMC tests for immunity

EMC tests for electromagnetic interference (type test)	
Standard	IEC EN 61000-6-4
Radio noise voltage to lines, only auxiliary voltage IEC-CISPR 22	150 kHz to 30 MHz Limit Class A
Interference field strength IEC-CISPR 22	30 MHz to 1000 MHz Limit Class A

Table 4/18 EMC tests for electromagnetic interference

Mechanical tests

Vibration and shock stress in stationary use	
Standards	IEC 60068
Oscillation IEC 60068-2-6 test Fc	Sinusoidal 10 Hz to 60 Hz: ±0.075 mm amplitude; 60 Hz to 150 Hz: 1 g acceleration Frequency sweep rate 1 octave/min 20 cycles in 3 orthogonal axes
Shock IEC 60068-2-27 test Ea	Semi-sinusoidal 5 g acceleration, duration 11 ms, each 3 shocks in both directions of the 3 axes
Seismic Vibration IEC 60068-3-3 test Fc	Sinusoidal 1 Hz to 8 Hz: ±7.5 mm amplitude (horizontal axis) 1 Hz to 8 Hz: ±3.5 mm amplitude (vertical axis) 8 Hz to 35 Hz: 2 g acceleration (horizontal axis) 8 Hz to 35 Hz: 1 g acceleration (vertical axis) Frequency sweep 1 octave/min 1 cycle in 3 orthogonal axes

Table 4/19 Vibration and shock stress in stationary use

Vibration and shock stress during transport	
Standards	IEC 60068
Oscillation IEC 60068-2-6 test Fc	Sinusoidal 5 Hz to 8 Hz: ±7.5 mm amplitude; 8 Hz to 150 Hz: 2 g acceleration Frequency sweep 1 octave/min 20 cycles in 3 orthogonal axes
Shock IEC 60068-2-27 test Ea	Semi-sinusoidal 15 g acceleration, duration 11 ms, each 3 shocks (in both directions of the 3 axes)
Continuous Shock IEC 60068-2-29 test Eb	Semi-sinusoidal 10 g acceleration, duration 16 ms, each 1000 shocks (in both directions of the 3 axes)
Free fall IEC 60068-2-32 test Ed	0.5 m

Table 4/20 Vibration and shock stress during transport

Technical data

Test data

Reference conditions according to IEC 62586-1 for determining the test data	
Ambient temperature	23 °C ± 2 °C
Relative humidity	40% to 60% RH
Supply voltage	V_{PS} ± 1%
Phases (3-wire network)	3
External continuous magnetic fields	DC field: ≤ 40 A/m
	AC field: ≤ 3 A/m
DC components V/I	none
Signal waveform	sinus
Frequency	50 Hz ± 0.5 Hz
	60 Hz ± 0.5 Hz
Voltage magnitude	V_{din} ± 1%
Flicker	P_{st} < 0.1%
Unbalance (all channels)	100% ± 0.5% of V_{din}
Harmonic	0% to 3% of V_{din}
Interharmonic	0% to 0.5% of V_{din}

Electrical tests

Standards	
Standards	IEC EN 61000-6-2 IEC EN 61000-6-4 IEC EN 61010-1 IEC EN 61010-2-030

Insulation test according to IEC 61010-1 and IEC EN 61010-2-030				
Inputs/Outputs	**Insulation**	**Rated Voltage**	**ISO Test Voltage**	**Category**
Current measuring inputs	Reinforced	150 V	AC 2.3 kV	Cat. III
Voltage measuring inputs	Reinforced	480 V	Surge voltage 9.76 kV	Cat. III
Supply voltage	Reinforced	300 V	DC 3.125 kV	Cat. III
Binary outputs	Reinforced	300 V	AC 3.536 kV	Cat. III
Ethernet interface	Function	< 50 V	DC 700 V	Cat. III
RS485 interface	Function	< 50 V	DC 700 V	Cat. III

Environmental conditions

Temperature data	
Operating temperature Devices with display: the legibility of the display is impaired at temperatures < 0 °C (+32 °F)	–25 °C to +55 °C
Temperature during transport	–40 °C to +70 °C
Temperature during storage	–40 °C to +70 °C
Maximum temperature gradient	20 K/h

Air humidity data	
Mean relative air humidity per year	≤ 75 %
Maximum relative air humidity	95 %, 30 days a year
Condensation during operation	Not permitted
Condensation during transport and storage	Permitted

Altitude	
Max. altitude above sea level	2000 m

General data

Battery	
Type	PANASONIC CR2032 VARTA 6032 101 501
Voltage	3 V
Capacity	230 mAh
Typical life	For operation with permanently applied supply voltage: 10 years
	For operation with sporadically interrupted supply voltage: a total of 2 months over a 10-year period

Internal memory	
Capacity	2 GB

DIN rail housing	IP20
Panel flush mounting (front)	IP40 (with display, without door) IP51 (with display and door)
Terminals	IP2x

Climate stress tests

Standards: IEC 60068
Dry cold: IEC 60068-2-1 test Ad
Dry heat during operation, storage and transport: IEC 60068-2-2 test Bd
Damp heat: IEC 60068-2-78 test Ca
Change of temperature: IEC 60068-2-14 test Na and Nb

Safety standards

Standards: IEC EN 61010
IEC EN 61010-1, IEC EN 61010-2-30

Table 4/21 Further technical data

Technical data

Please refer to the manual for the technical data for SICAM P855.

Description	Order No.
Multifunctional Power Meter, Power Quality Recorder	
SICAM P855	**7KG855 □-0AA□□-□AA0**
Device type	
Dimensions 96 mm x 96 mm x 100 mm / 3.78 in. x 3.78 in. x 3.94 in. (W x H x D) 4 Inputs for AC voltage measurements 3 Inputs for AC current measurements 2 Binary outputs Galvanic isolated voltage measurement inputs Web server for parameterization and visualization, and data management Measurements according to standard IEC 61000-4-30, Class S	
Measurement functions	
Basic measurements: V, I, f, P (class 0.2S), Q, S, cos φ, limit violations, energy measurements measurements till 40th harmonics Transmission measurement values via communication protocols	
Basic measurements and advanced measurements and Recordings on internal 2-GB memory: Power Quality instrument Measurement min / max / mean values Recorder for Power Quality measurements Various recorders for other measurements Event detection (e.g. V_{dip}), visualization Online PQ reporting e.g. according to EN 50160	5
Housing	
Snap-on mounting unit without graphical display	0
Panel-mounted instrument with graphical display	1
Serial Communication Interface	
Without	0
RS485 – Modbus RTU	1
RS485 – IEC 60870-5-103 and Modbus RTU	3
Front protection class	
IP20 (Position 7 = 0)	0
IP40 (Position 7 = 1)	1
IP51 (Position 7 = 2)	2
Ethernet Interface and Communication protocol, RJ45	
Modbus TCP	0
Modbus TCP and IEC 61850-Server	2

Table 4/22 Selection and ordering data

Products – SICAM P855

SIEMENS



Power Quality devices for all applications

SICAM Q80
Power Quality Recorders

siemens.com/powerquality

Contents – SICAM Q80

	Page
Description, function overview	4/35
Device functions	4/37
System communication and configuration	4/41
SICAM Q80 Manager	4/42
Connection	4/48
Technical data	4/49
Connection diagrams, dimension drawings	4/53
Selection and ordering data	4/54
CE conformity and disclaimer of liability	4/55

Description

SICAM Q80 is a compact and powerful recorder designed for utilities and industries to continuously monitor the power quality for regulatory purposes (e.g. evaluation against the standards) as well as event-based recordings for explanatory purposes (e.g. wave shape recording), from the generation plant to the last customer in the electrical supply chain.
With SICAM Q80, the quality of the power supply system can be continuously monitored. This can be based on the quality criteria defined in the European electricity supply system quality standard EN 50160 or other assessment criteria. Moreover, data that are above or below the defined threshold values are stored and can thus be used for a meaningful overall analysis.

It provides information that allows to see the whole electrical healthy of the power system!

Field of application of SICAM Q80

- Regulatory power quality application: Measurement, comparison, and profiling of power quality parameters at the individual electrical system interfaces: E. g. generation, transmission, subtransmission and distribution systems.
- Explanatory power quality application: Disturbance recording (e.g. waveform capture) support to understand the causes and consequences of power quality problems.

Benefits

- Customer satisfaction: Companies with a suitable power quality monitoring system are proven to be more reliable suppliers and users of energy.
- Asset protection: Early identification of disturbances and active response to them. Comprehensive information for enhancing the visibility and control of assets at the edge of the grid.
- In case of negotiations or disputes, power quality monitoring provides evidences to align interests and to support agreements between parts.
- Quality of supply is in the interests of power utilities, regulators, consumers, and the environment.



Fig. 4/43 SICAM Q80 Power Quality Recorder

Function overview

Measurement of continuous phenomena and disturbances according to the necessary accuracy requirements, as stipulated in IEC 61000-4-15, IEC 61000-4-7 and IEC 61000-4-30 (Class A).

Recording and evaluation

- Voltage frequency: Frequency deviation
- Slow voltage variation: Detection and monitoring of supply interruption
- Rapid voltage variations: Voltage dips, voltage swells, rapid voltage changes and voltage fluctuations (flicker)
- Power line signaling superimposed on the supply voltage
- Voltage waveshape: Harmonics (up to the 50th harmonic) and up to 10 interharmonics
- Flexible value limit violation parameterization and event definition for voltage, current, power, etc.
- Fault recording triggered by waveform and binary values
- Comparison and reporting of power quality profile according to EN 50160 newest version or local standards
- Transients[1] recording till 17 microseconds for 60 Hz and 20 microseconds in 50 Hz networks.

[1] 1. Option for transient recognition is OFF
a) Sampling rate is 10 kHz
b) Fault records with 10 kHz

2. Option for transient recognition is ON
a) Available for V3.X.
b) 2 sampling rates 10 kHz and 50 kHz
c) 10 kHz data to calculate all mean values, flicker, etc.
d) 50 kHz only for U1, U2, U3 to detect transients. The fault records have a sampling rate of 50 kHz.

Description, function overview

Features

- Suitable for monitoring single-phase, 3- and 4-wire power systems (up to 1000 V_{rms})
- 4 voltage, 4 current, or 8 voltage measuring channels
- Standard: 4 binary inputs, 4 binary outputs
- Sampling rate 10 kHz for network analysis (50 kHz for transient function)
- Measurement accuracy 0.1 % of the range
- High local storage capability: Removable compact flash (standard delivery 2 GB)
- Enhanced data compression process (power quality data)
- Automatic data transfer
- Automatic comparison and reporting of the power quality profile according to EN 50160 or local standards
- Automatic notification in case of a fault or violations by e-mail, SMS, and fax
- Export functions
- Ethernet and modem communication interfaces for parameterization, remote monitoring, and polling
- GPS / DCF77 / IRIG-B and NTP for synchronization
- Network trigger system
- Simple operation, compact and robust design
- Passwort protection
- Modbus TCP with till 3 clients access
- Enhanced monitoring function for binary alarming, individual harmonics recognition and voltage events, as voltage dips
- Complete voltage quality view and recording of in 4-wire connections in phase-neutral and phase-phase values for a flexible analyses of impact of events on primary and secondary systems sides.

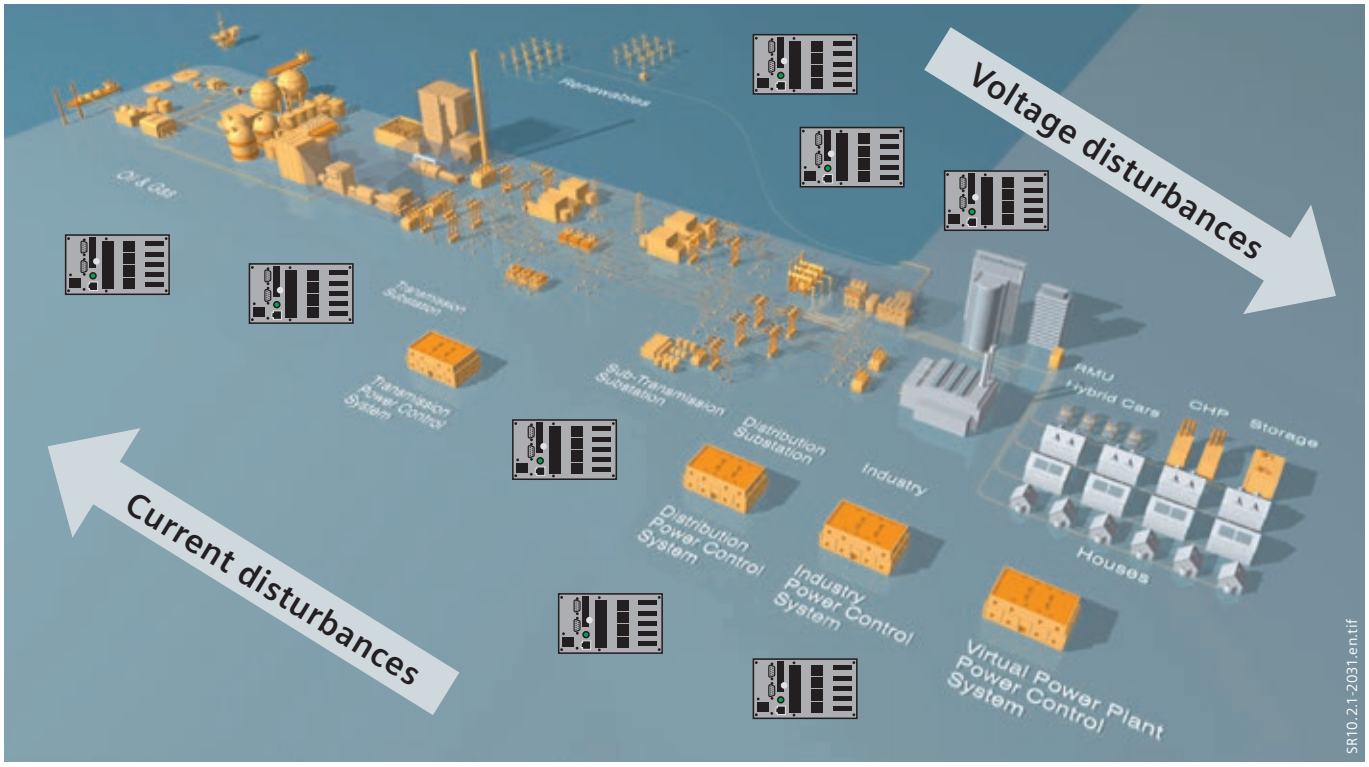

Fig. 4/44 Power quality monitoring provides value to everyone – to the local utility, to the consumer, to the local economy and to the environment

Device functions

SICAM Q80 implements the "complete recording" measurement philosophy. This means that all measured quantities are available for subsequent analysis even after the comparison with standards. This ensures that events that do not reach the defined thresholds but may still contain useful data can still be analyzed.
The "complete recording" principle provides the option of performing more extensive data processing than the completed EN-based measurement, meaning that SICAM Q80 has a far wider functional scope than that defined in the EN 50160 standards.

Continuous monitoring

The r.m.s. values for current and voltage are calculated every half cycle (10 ms / 50 Hz or 8.33 ms at 60 Hz) and using algorithms, as described in the IEC 61000-4-30 standard. Fast changes in the r.m.s. value of voltage and the current are recorded as plot curves (see Fig. 3/46). This is done using a patented data reduction method. Within the tolerance range of a ± 5 % deviation from the measuring range, data reduction works with 1.5 % accuracy by default, while outside the tolerance range, twice the precision, namely 0.75 %, is used. These values can be parameterized in the software. The method is defined and parameterized to achieve a reduction factor of down to 1:20,000 without loss of relevant information, such as voltage dips, despite the fact that recording is continuous.
The advantage is that no thresholds have to be adjusted and there is no loss of information.



Fig. 4/45 SICAM Q80 Power Quality Recorder

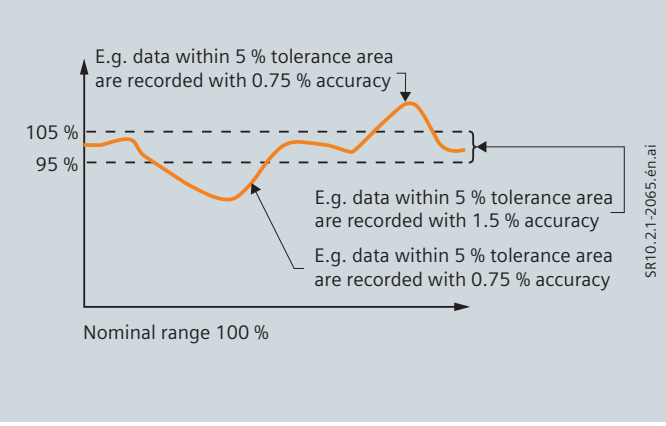

Fig. 4/46 Example of the the compression algorithm for continuous recording, e.g. for 5 % of the measurement range

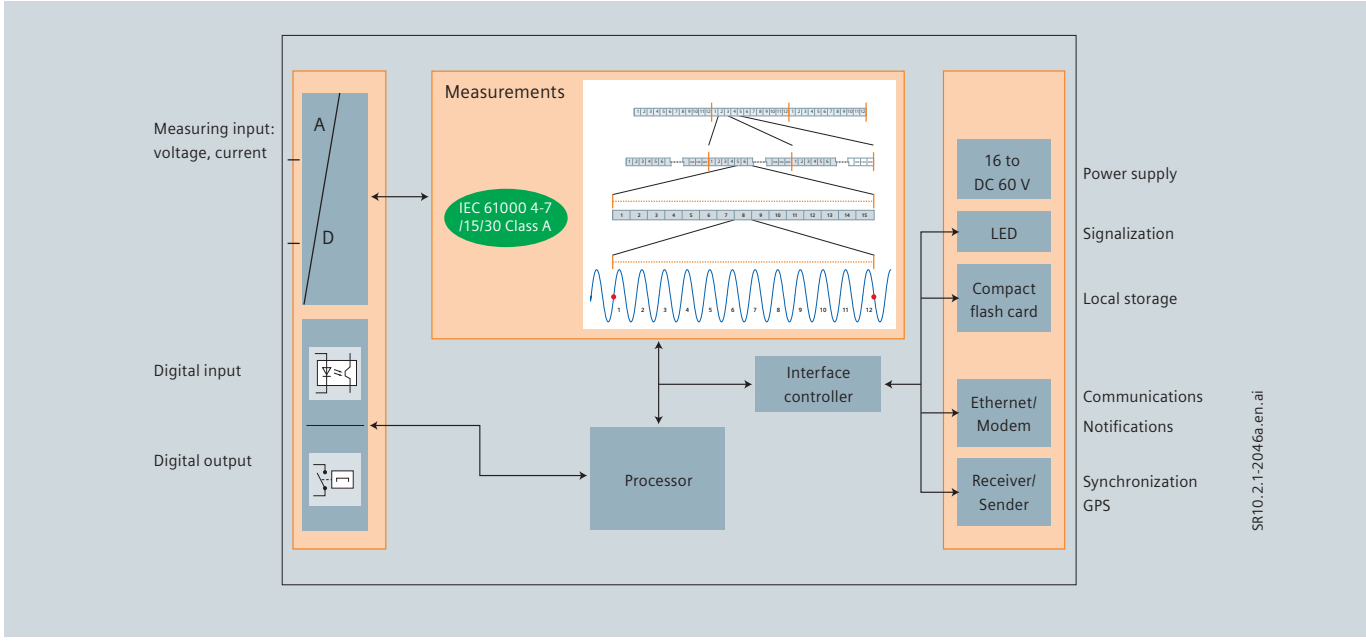

Fig. 4/47 Block diagram for data recording and online processing of SICAM Q80

Device functions

Recording of events

The plots of the r.m.s. value curves are the basis for capturing events. A deviation of the r.m.s. in one direction results in a new data point in the reduced curves; an event is characterized and bounded by two transitions: One from the normal to the faulty voltage level and one from the faulty level back to the normal level. The normal-to-fault and back-to-normal transitions are defined as a standard ± difference from a definable hysteresis voltage.
The duration of the event is measured between the two transitions. The depth of the result is determined from the minimum or maximum of the amplitude in the region affected by the fault. This assumes that the amplitude remains almost constant during the fault. According to the currently valid standard, every deviation > 10 % of the nominal voltage counts as an event. Depending on the duration and amplitude, further distinctions are made into dips and short / long interruptions.

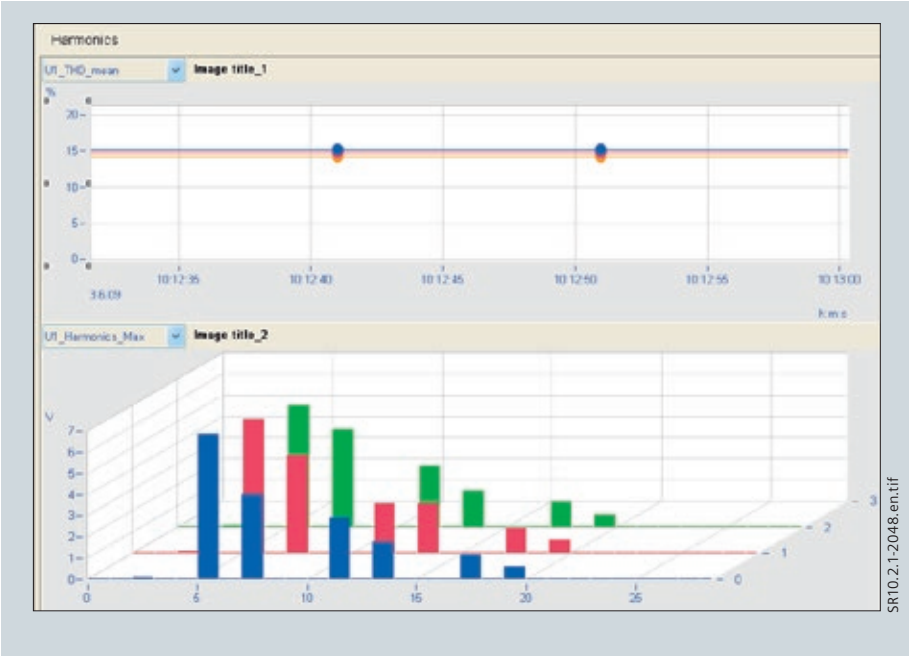

Fig. 4/48 Harmonics overview

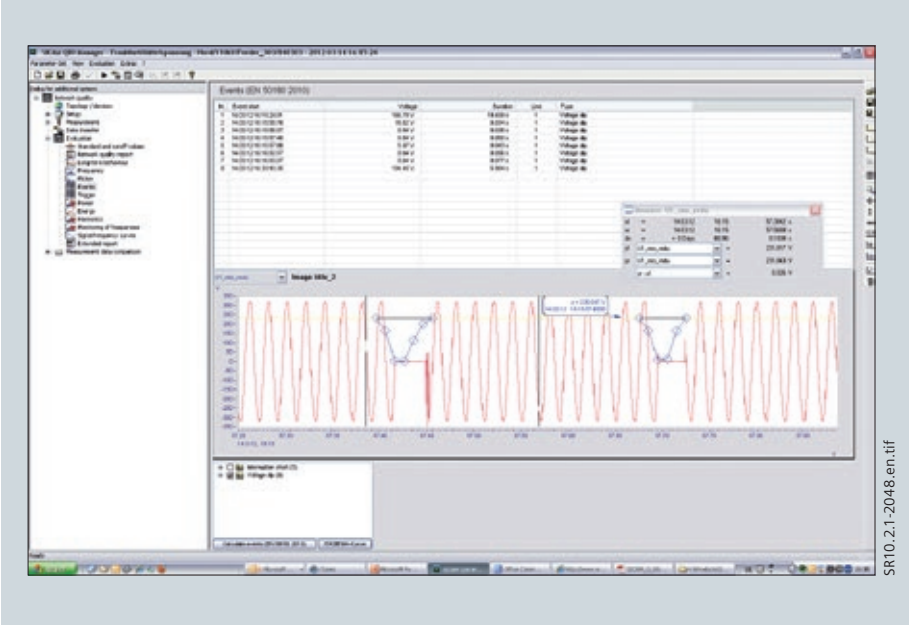

Fig. 4/49 Event Recording – Voltage Dip

Harmonics and interharmonics

The frequencies in the voltage, current, and therefore also in the power, are calculated by means of Fast Fourier Transform (FFT). The FFT is calculated seamlessly with a square window over each group of 10 periods. This corresponds to the specifications for measuring harmonics and interharmonics in power supply networks defined in EN 61000-4-7.

Flicker

Low-frequency amplitude fluctuations in the network, in turn, cause the luminous density in lamps to fluctuate. This is perceptible as flickering. Above a certain threshold of perceptibility, this is considered a nuisance. Such fluctuations can be measured using a flickermeter. The flicker is calculated with a sampling rate of 100 Hz according to the description of a flickermeter in the EN 61000-4-15 standard.

Trigger

Along with the conventional trigger mechanisms, responding to signals exceeding settable cutoff values, it is also possible to set triggering conditions depending on the signal deviating significantly from the expected waveform. For example, any sudden signal deviations occurring during long-term monitoring due to harmonics or brief voltage fluctuations (spikes) can be captured even if the magnitude of the deviation is much smaller than the nominal value itself.
The recording duration after and before an occurrence of a trigger event is configurable. The recording time is from 10 ms to 60 s and pre-trigger 100 ms to 30 s. Unlike in normal recording, triggered raw data recording uses a time resolution of 100 µs. There is also a trigger for signal frequencies. In this case, the input signal is band-pass-filtered before triggering. This enables visualization of the signal, whose amplitude is modulated over a signal frequency. The classic application for this are ripple control telegrams.
Triggers responding to external binaries are also possible.

Ethernet trigger

SICAM Q80 can also send triggers over the Ethernet to other SICAM Q80 devices. These are termed network triggers. The other SICAM Q80 devices in the network receive this message and respond accordingly, so that an event or a disturbance at one network node results in instantaneous measured values at all other network nodes. This enables simultaneous analysis of the effect of this disturbance on the complete network.

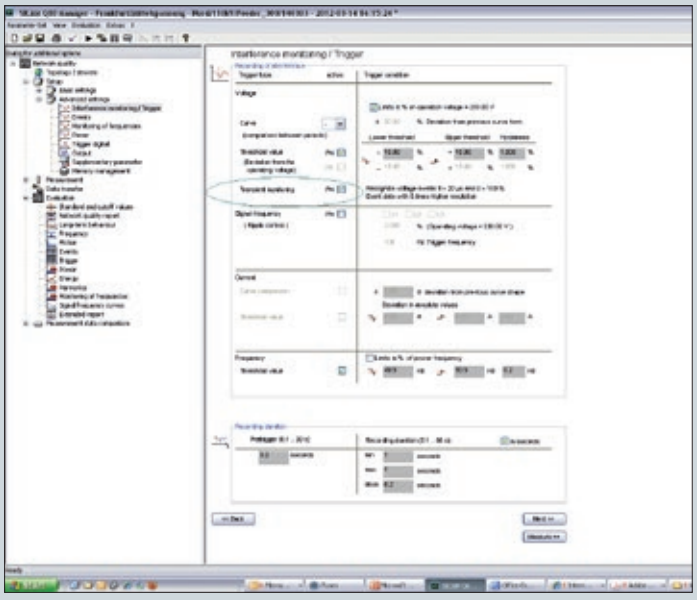

Fig. 4/50 Trigger and transient parameterization

Trigger type	Condition parameterization
Voltage and current	Curve comparison, threshold
Main signaling frequency (ripple control)	% of voltage, frequency, recording duration
Frequency (threshold value)	Limits in % of power frequency
Digital trigger	Transitions –> 0 to 1 or 1 to 0

Table 3/23 Trigger type and parameterization conditions

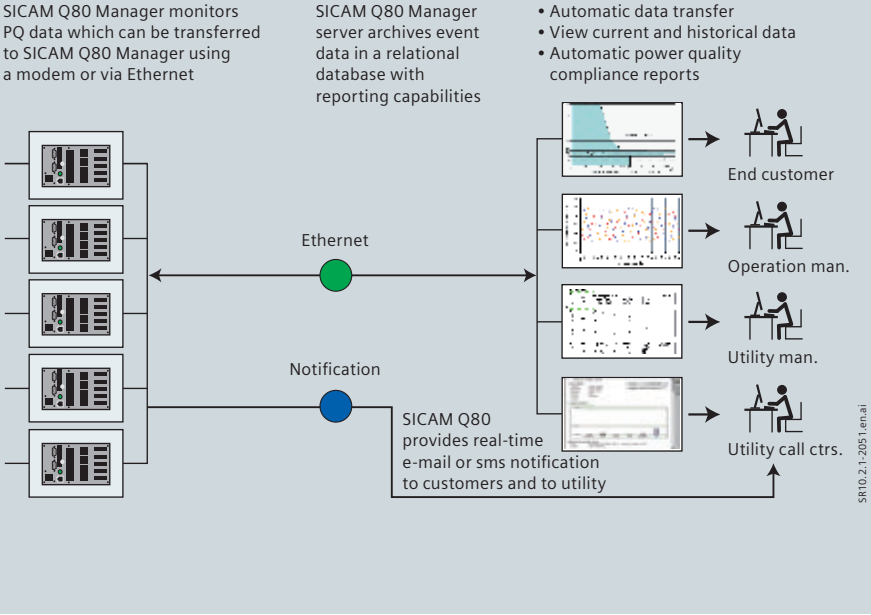

Fig. 4/51 SICAM Q80 – system overview

Device functions

Notifications

SICAM Q80 supports the automatic transmission of notifications and messages in response to specific events. Such events may include voltage disturbances, lack of available storage space, or cyclic notification. One recipient can be defined for each message. The message types that can be chosen are e-mail, SMS, fax, or any combinations of these.

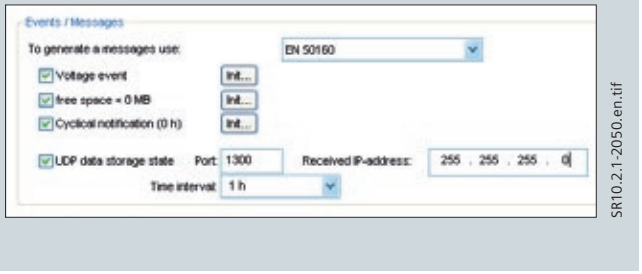

Fig. 4/52 Notification configuration

Internal memory capacity

The available storage medium is a compact flash card hard drive with a standard capacity of 2 GB. Optionally, compact flash cards can be used with capacities up to 16 GB. Intelligent memory management and effective data reduction enable storage of up to 130 weeks' (2.5 years) worth of data, in compliance with EN 50160.



Fig. 4/53 Standard supply: 2 GB CF card (can be upgraded to 16 GB)

System communication and configuration
SICAM Q80 units are installed at various points to record electrical quantities in order to analyze power quality or event recording. Different connection methods or system configurations are possible, depending on the application and existing infrastructure.

TCP/IP communications for flexible network configurations
The networking of single devices enables central parameter setting and administration as well as a complete, accurately timed recording of events and disturbances of all systems defined in the network.

Time synchronization
SICAM Q80 can be synchronized by Network Time Protocol (NTP), IRIG-B, DCF77 and GPS real-time clock for absolute time synchronization. It is also possible to synchronize multiple SICAM Q80 devices even without a GPS real-time clock, and to plot their respective data jointly in the correct chronological relationship.

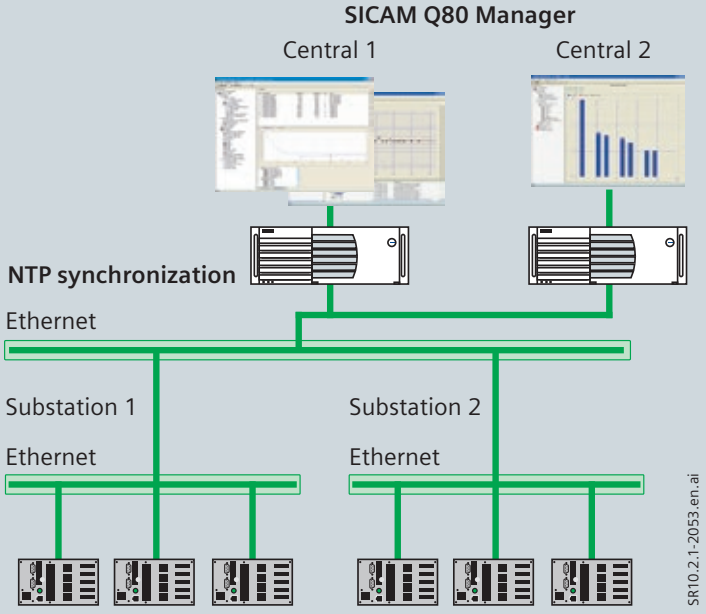

Fig. 4/54 Flexible networks with TCP/IP protocol for communications and synchronization

Software

SICAM Q80 Manager

The SICAM Q80 Manager is a complete software tool for parameterization, system overview, evaluations and automatic analyses; it allows the analysis of more than 500 data sets from the SICAM Q80 Power Quality Recorder. It covers the whole chain of power quality analysis from measurement to the provision of important information, enabling remedial measures to be taken to improve power quality.

The SICAM Q80 Manager PC software enables user-friendly operation. Setting and other operations are performed in an intuitive manner. Despite the large number of functions available, the user interface is clearly organized, in a tree structure similar to the familiar Microsoft Explorer® tree structure. SICAM Q80 Manager runs under Microsoft Windows 2000, XP, Vista or Windows 7.

For operation and analysis by the user, the SICAM Q80 Manager software enables central parameter setting of all devices without any special PC knowledge.

The SICAM Q80 Manager software is designed to guarantee easy handling of the applications. Conducting measurement according to industry standards requires no special instrumentation or computer skills. Its function and appearance resembles the familiar Windows-Explorer.

The standard software module includes all functions necessary for operation, display, analysis and documentation.

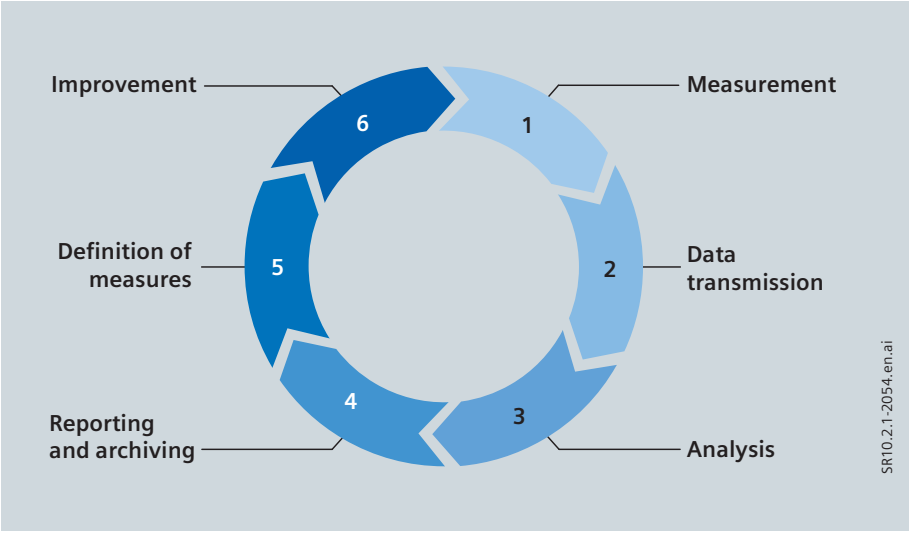

Fig. 4/55 Power quality cycle

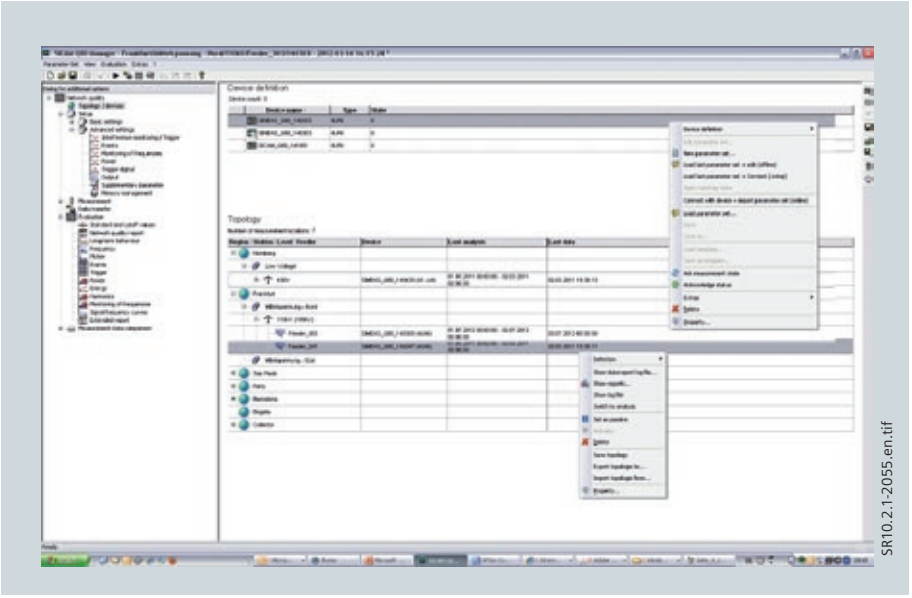

Fig. 4/56 Measurement overview

Measurement system overview

A topology structure can be created in SICAM Q80 Manager, so that the user can have a clear measurement system structure, with regions, station, voltage level, measurement location and device name information. For each device, the measurement status is reported, so that the last measurement time information is available.

Defining your own grid code with user-friendly advanced settings

The process of setting up measurements, data analysis and documentation is streamlined. In SICAM Q80, the EN 50160 measurements are predefined and require only very few additional settings, so SICAM Q80 is easy to use even for operators without any special know-how or training. However, the user can freely define and save special measurements, value limits, analyses and documentation to be reused later if needed.

Online measurement
SICAM Q80 Manager enables connection with a device for the purpose of visualizing and monitoring online measurements over the network from a central PC at any time.
Further possibilities for online display are: Representation of currents and voltage in a vector diagram, online voltage and current harmonics, power direction of each phase and, in total, progression of r.m.s. value, recorded events.

Data evaluation
With the help of the database module, the user can search for any events, measurement channels, or deviations from standards. The data found or chosen can be displayed or compared at the touch of a button.

Limit configuration
The value limits stipulated in the EN 50160 standard serve as the basis for the power quality report. A single form displays all values in relation to the user-selected value limits.
Depending on the particular quality demands, they can be changed and saved with names chosen by the user.
Either the analysis can be based on user-defined data, or default value limits can be selected.
Analysis is followed by fully automated compilation of documentation of the overall measurement, in accordance with industry standards.

Data polling – Auto Transfer
With the automatic data transfer program – Auto Transfer – part of delivery of the SICAM Q80 Manager, it is possible to get data automatically from the remote devices.

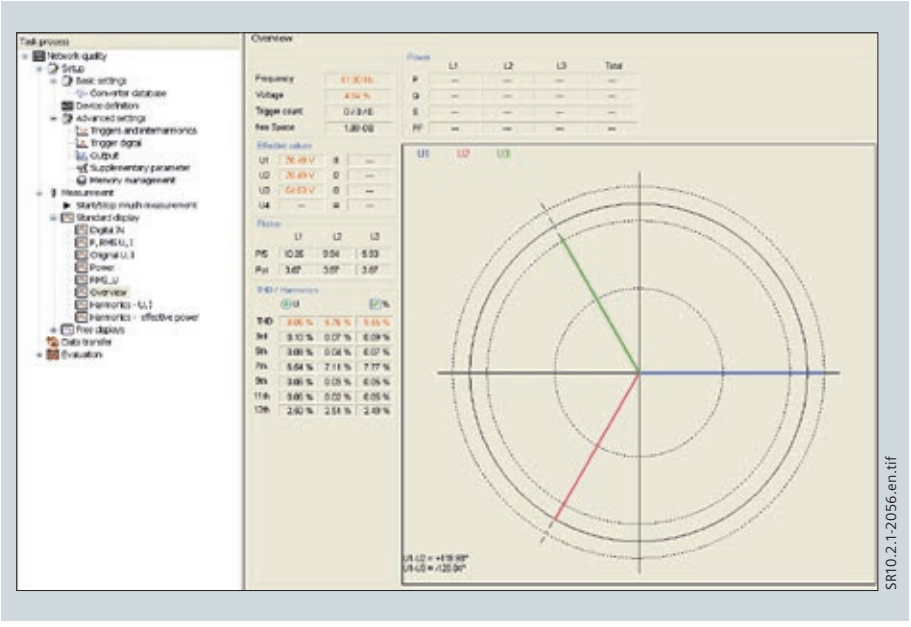

Fig. 4/57 Online visualization – phaser diagram

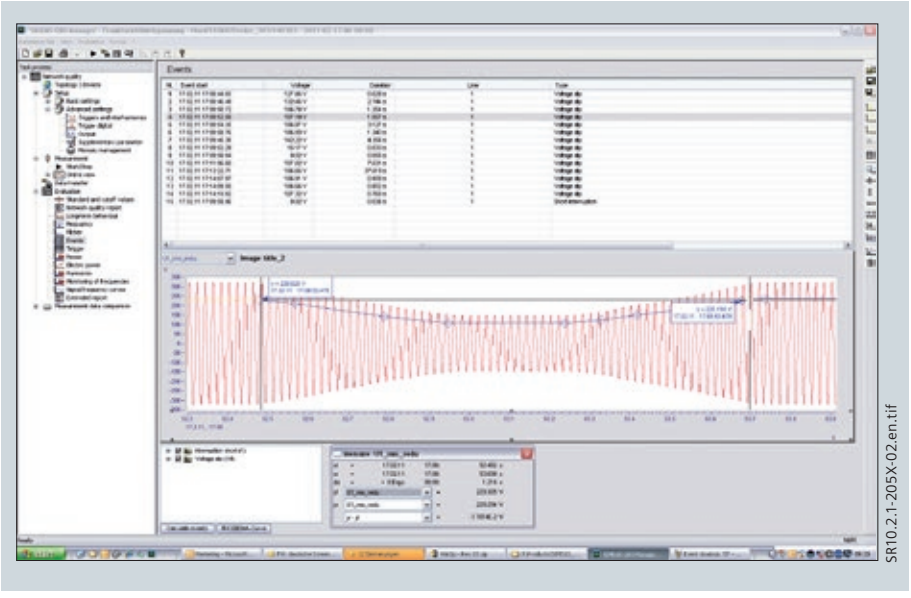

Fig. 4/58 Trigger analysis

The Auto Transfer software can be installed and parameterized independently of the SICAM Q80 Manager, in distinct places in the network or PCs. It is very helpful for reaching the flexibility of installing client server architectures.
The Auto Transfer can work with time cyclical data polling, or data are sent from the device as soon as they are available. E.g., the data availability depends on the voltage quality measurement interval or events. The data transfer intervals can be parameterized for power quality data, e.g. from 2 hours until 4 weeks duration. So, when they are completed, the automatic data collection can begin, e.g. from the device to the server or evaluation station. In case of events, e.g. voltage triggers are matched, this data can be automatically transferred to the evaluation station independently of the measurement interval.

Data and information organization
For analysis purposes, over 500 waveforms per measurement are available. To make them manageable, e.g. evaluations to be applied to other management reporting tasks, the data can be exported to Excel or CSV files.

Software

Report generator

The report generator is used to create graphical reports to document the measurement and analysis results. Unlike the print function of the curve window, which prints out the current curve plot, the report can be made up of a layout comprising curve plots, text, tables and other graphical objects.
The report generator has a multi-document user interface on which multiple reports can be edited at one time. The usual editing operations, such as multiple selection, copy, paste, move, orientation, etc. are all provided.
The properties of the objects, such as colors, fonts, etc. can be changed in various ways, even in groups.
An undo function, seamless zooming, a freely definable grid with a snap-function, and context sensitive online help round off the support tools available to the user for rapid compilation of complex reports.
The report generator can be used to give every report and log its own layout:

- Automation of documentation
- The quick way to get measurement results as a hard copy
- Creation of document templates
- Insertion of measurement plots of any length
- Insertion of measurement value tables
- Insertion of elements via the MS Windows Clipboard
- Text, pixel graphics, vector graphics, OLE objects
- Texts in any font, color or format
- Structural elements
- Lines, frames, fields, arrows
- Grid functions for millimeter-precise layouts (e.g. 1 V corresponds to 10 mm / 0.39 in.).

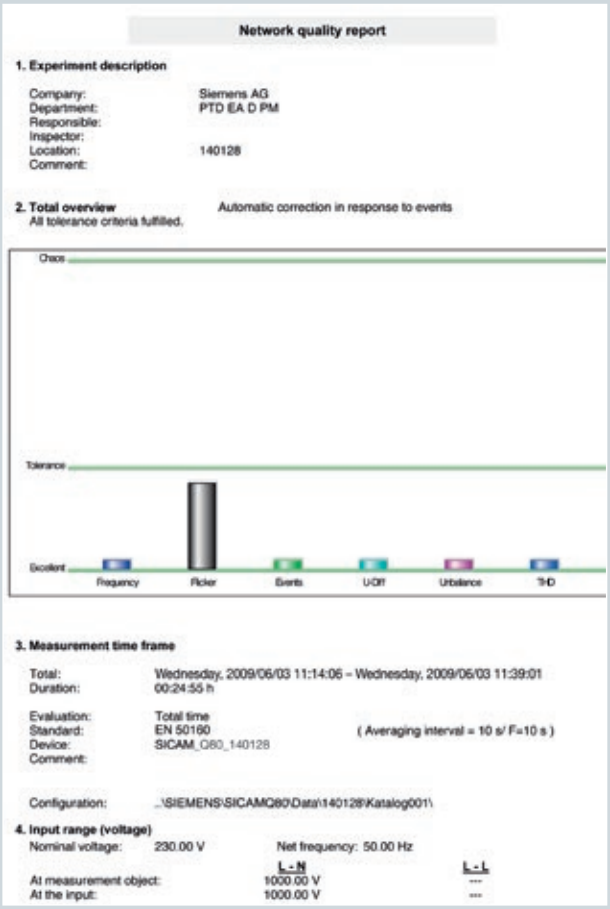

Fig. 4/59 Network quality report

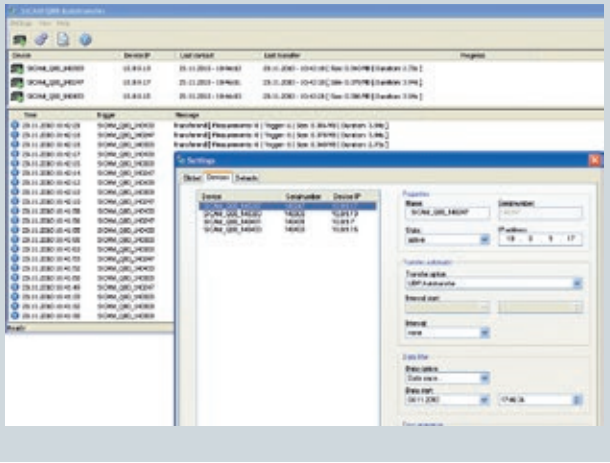

Fig. 4/60 Automatic data transfer program

Automatic power quality reporting – Auto Report

Jointly with Windows Scheduler Program, the Auto Report performs automatically scheduled power quality reports. The users just need to define the task and its interval, and where the reports have to be available.

Through the measurement overview option in the SICAM Q80 Manager, the user can access the reports, e.g. in PDF files, over the reports status windows, which already contain the brief status information, pass or fail.

Measurements overview

All values relevant to power quality are monitored, recorded and evaluated according to international and national standards for power quality (e.g. the European standard EN 50160).

Measurement standards	IEC 61000-4-30; IEC 61000-4-15; IEC 61000-4-7
Standards for voltage quality analysis	Voltage quality in accordance with EN 50160 or according to individually defined criteria
Voltage, current	Curve plots of r.m.s. values after every half period (reduced half-period r.m.s. values)
Flicker	Short-term (P_{st}), long-term (P_{lt}) and momentary values (P_{f5})
Frequency	40 to 70 Hz
Harmonics	Voltage, current up to 50th harmonic, THD
Interharmonics	Up to 10 frequencies (5 to 3,000 Hz, resolution 5 Hz)
Symmetry	Zero / positive / negative phase-sequence system / asymmetry
Power calculation as per DIN 40110-1 and CE2	1-, 2-, 3-phase, total (active, apparent, reactive power)
Phase angle	< 1° up to 2,5 kHz
Trigger functionality	For voltage and current: r.m.s. trigger, curve form trigger, signal frequency trigger
Transients	Option to detect transients for U1, U2, U3. The fault records have a sampling rate of 50 kHz

Table 4/24 Measurement specification

Time resolution

Many network quality attributes (e.g. voltage dips) require very detailed display while for others (e.g. slow changes), averages over 10 minutes are adequate. There may be five different resolution levels in total, depending on the calculation technique used.

Resolution	Significance	Examples
10 min	Values over the selected averaging interval (default 10 min)	Mean values, flicker
10 to 12 cycles	Values over the selected averaging interval f (default = 10 s)	Frequency
Half cycle	Sample of the demodulated impulse sequence (filter result of the amplitude modulated signal frequency)	Main voltage signaling
10 ms	r.m.s. value every half cycle	r.m.s. values
100 µs	Input samples and derived quantities without data reduction	Recording of instantaneous value (curve shape)

Table 4/25 Time resolution of data

Measurement overview

Measurement	Measurement intervals and comments	3-phase current 4-wire	3-phase current 3-wire	Single-line
Voltage	3 s, 10 s, 1 min, 5 min, **10 min**, 15 min, 30 min, 1 h, 2 h	■	■	■
$V_{x_rms_mean}$	Mean of the voltage r.m.s. value	■	■	■
$V_{x_rms_min}$	Minimum in the averaging interval	○	○	○
$V_{x_rms_max}$	Maximum in the averaging interval	○	○	○
$V_{x_rms_redu}$	Reduced time plot (maximum resolution: 10 ms)	■	■	■
$V_{x_THD_mean}$	THD (Voltage total harmonic distortion)	■	■	■
$V_{x_harmn_mean}$ with x = 1...8; n = 1...50	Voltage harmonics	■	■	■
$V_{x_frz_mean}$ with z = 1...10	Monitoring of any fixed frequencies (e.g. interharmonics)	○	○	○
Current	3 s, 10 s, 1 min, 5 min, 10 min, 15 min, 30 min, 1 h, 2 h	○	○	○
$I_{x_rms_mean}$	Mean value of the current r.m.s. value	●	●	●
$I_{x_rms_min}$	Minimum in the averaging interval	○	○	○
$I_{x_rms_max}$	Maximum in the averaging interval	○	○	○
$I_{x_rms_redu}$	Reduced time plot	●	●	●
$I_{x_THD_mean}$	THD (Current total harmonic distortion)	●	–	●
$I_{x_harmn_mean}$ with x = 1...4; n = 1...50	Upper harmonic for current	●	–	●
$I_{x_frz_mean}$ with z = 1...10	Monitoring of any fixed frequencies	○	○	○
Frequency	3 s, **10 s**, 30 s, 1 min, 5 min, 10 min	■	■	■
Frequency	System frequency	■	■	■
Frequency$_{_histogram}$	Frequency histogram	■	■	■
Frequency$_{_redu}$		■	■	■
Symmetry	3 s, 10 s, 1 min, 5 min, 10 min, 15 min, 30 min, 1 h, 2 h	■	■	–
Unbalance$_{_rms}$		■	■	–
SymmetryZero$_{_rms}$	Zero sequence system	■		–
SymmetryPositive$_{_rms}$	Positive sequence system	■	■	–
SymmetryNegative$_{_rms}$	Negative sequence system	■	■	–
Flicker	3 s, 10 s, 1 min, 5 min, 10 min, 15 min, 30 min, 1 h, 2 h			
$V_{x_rms_pst}$	P_{lt} computed from 12 P_{st} values	●	■	■
$V_{x_rms_plt}$ with x = 1...3		●	■	■
Power	3 s, 10 s, 1 min, 5 min, 10 min, 15 min, 30 min, 1 h, 2 h	○	○	○
$P_{_P_mean}$	Active power for the overall system	●	●	–
$P_{_Q_mean}$	Reactive power for the overall system	●	●	–
$P_{_S_mean}$	Apparent power for the overall system	●	●	–
$P_{_Lambda_mean}$	Power factor	●	●	–
$P_{x_P_mean}$	Active power for one channel	●	–	●
$P_{x_Q_mean}$	Reactive power for one channel	●	–	●
$P_{x_S_mean}$	Apparent power for one channel	●	–	●
$P_{x_Lambda_mean}$	Power coeficient for one channel	●	–	●
$P_{x_P_harmn_mean}$	Active power of the harmonics	●	–	●
$P_{x_Q_harmn_mean}$	Reactive power of the harmonics	●	–	●
$P_{x_S_harmn_mean}$	Apparent power of the harmonics	●	–	●
$P_{x_Phase_harmn_mean}$ with: x = 1...4; n = 1...50	Phase power of harmonic	●	–	●
$P_{x_P_frz_mean}$	Active power of the monitored frequencies	○	–	○

■ = always present ● = present if current is measured ○ = can be switched on / off (optional) – = not present

Note: Measurement intervals: The interval written in bold print is to be used for compliance with the EN 50160 standard, e.g. 10 min.
Specifications refer to a 50 Hz and a 60 Hz system. For all channels, subsequent calculation of a histogram and the cumulative frequency is possible.

Table 3/26 Selection of measurement and metering values (contin. on page 3/47)

Measurement	Measurement intervals and comments	3-phase current 4-wire	3-phase current 3-wire	Single-line
$P_{x_Q_frz_mean}$	Reactive power of the monitored frequencies	○	–	○
$P_{x_S_frz_mean}$	Apparent power of the monitored frequencies	○	–	○
$P_{x_Phase_frz_mean}$ with: x = 1...4; z = 1...10	Phase power of monitored frequencies	○	–	○
Trigger	Measurement duration 200 ms. Resolution 100 µs	○	○	○
V_{x_event}	r.m.s. trigger, curve shape trigger	▲	▲	▲
I_{x_event} with: x = 1...4	r.m.s. trigger, curve shape trigger	▲	▲	▲
Signal frequency trigger	Mean values: 3 s, 10 s, 1 min, 5 min, 10 min, 15 min, 30 min, 1 h, 2 h	○	○	○
$V_{x_signal_mean}$	Mean of the voltage	▲	▲	▲
$V_{x_signal_redu}$	Reduced time plot	▲	▲	▲
$V_{x_signal_event}$	High resolution signal voltage trigger (10 ms)	▲	▲	▲
$P_{x_P_signal_mean}$	Active power	▲ ●	▲ ●	▲ ●
$P_{x_Q_signal_mean}$	Reactive power	▲ ●	▲ ●	▲ ●
$P_{x_S_signal_mean}$	Apparent power	▲ ●	▲ ●	▲ ●
$P_{x_Phase_signal_mean}$ with: x = 1...3	Phase power	▲ ●	▲ ●	▲ ●
Channels during measurement (online monitoring)				
Voltage		■	■	■
V_x	100 µs (no averaging, original signal)	■	■	■
V_{x_rms}	r.m.s. every 10 ms	■	■	■
$V_{x_FFT_}$	Voltage harmonics (1st – 50th)	■	■	■
Phase				
$V_1 - V_2$		■	■	■
$V_1 - V_3$		■	■	■
$V_x - I_x$ with: x = 1...3		●	●	●
Current	100 µs	○	○	○
I_x	100 µs (no averaging, original signal)	●	●	●
I_{x_rms}	r.m.s. every 10 ms	●	●	●
I_{x_FFT} with: x = 1...3	Upper harmonics (1st – 50th)	●	●	●
$P_{x_P_harmonics_}$ with: x = 1...3	Harmonic real power (1st – 50th)	●	●	●
Overview display during measurement				
V_x	r.m.s. over one period	■	■	■
THD	of every 10 periods	■	■	■
V-harmonics (in % of fundamental frequency or *V*) with: x = 1...3	FFT over 10 periods	■	■	■
I_x	r.m.s. over one period	●	●	●
THD	of every 10 periods	●	●	●
I-harmonics (in % of fundamental frequency or A) with: x = 1...3	FFT over 10 periods			
Unsymmetry	of every 10 periods	■	■	■
Instantaneous flicker of V_x with: x = 1...3	of every 10 periods	■	■	■
Power				
P_x, Q_x, S_x, power factor		●	–	●
For the overall system with: x = 1...3		●	●	–
Additional information	Free storage space in the measurement device	■	■	■
	Number of recorded trigger events	■	■	■

■ = always present ● = present if current is measured ▲ = present if the associated trigger was activated ○ = can be switched on / off (optional) – = not present

Note: Measurement intervals: the interval written in bold print is to be used for compliance with the EN 50160 standard, e.g. 10 min.
Specifications refer to a 50 Hz and a 60 Hz system. For all channels, subsequent calculation of a histogram and the cumulative frequency is possible.

Table 3/27 Selection of measurement and metering values (contin. from page 3/46)

Connection

Connection examples

Four-wire connection (star circuit)

- V_1, V_2, V_3 → Lines 1, 2, 3, V_4, PE (protection ground)
- N → Neutral
- I_1, I_2, I_3, I_4 → connected or unconnected (V_4, I_4 can be measured optionally)

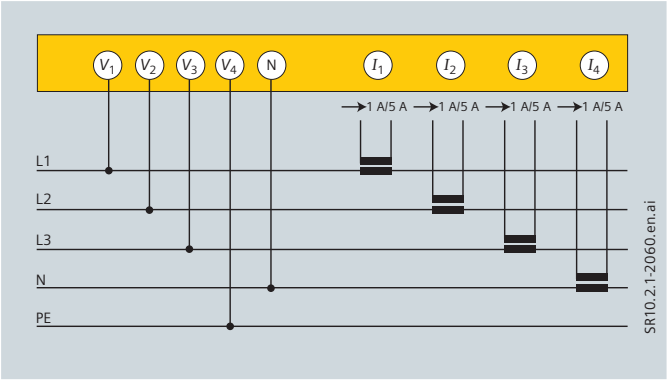

Fig. 4/61 Four-wire connection

Eight-voltage connection

System 1:

- V_1, V_2, V_3 → Lines 1, 2, 3, V_4, PE (protection ground)
- N → Neutral

System 2:

- V_5, V_6, V_7 → Lines 5, 6, 7, V_8, PE (protection ground)
- N → Neutral

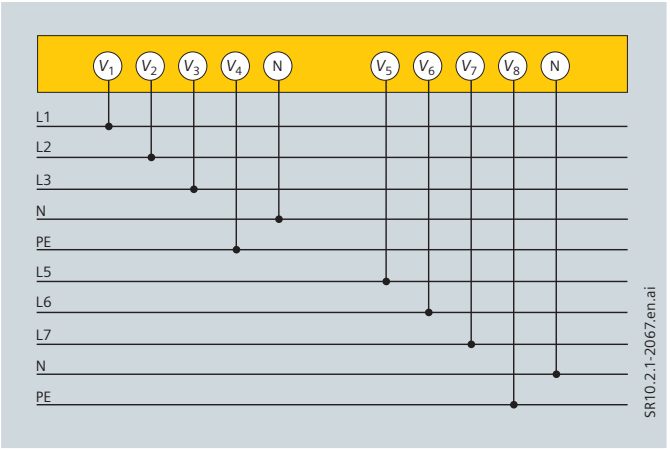

Fig. 4/62 Eight-voltage connection

Three-wire connection $3 \times V / 3 \times I$ or $2 \times I$ (delta connection)

- V_1, V_3 → Lines 1 and 3
- N → Line 2
- I_1, I_3 → Lines 1 and 3
- I_2 → Line 2 optionally possible

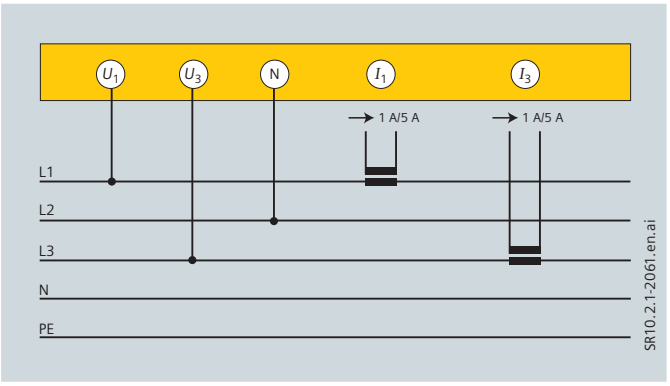

Fig. 4/63 Three-wire connection (delta connection)

Single-phase connection

- V_1 → Line 1
- N → Neutral

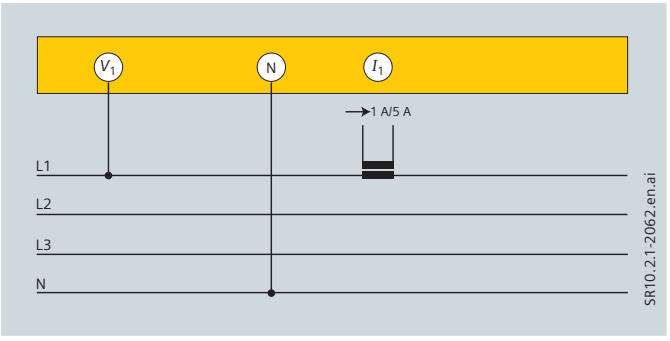

Fig. 4/64 Single-phase connection

General data

Parameter	Typical value	Min./max.	Test conditions/remarks
Ambient conditions	The normal ambient conditions according to EN 61010-1 apply		
Signal inputs	4 × current [*I*] 4 × voltage [*V*] and 8 × voltage [*V*]		
Digital input/output	4 binary inputs 4 relay outputs		
Power consumption		< 10 W < 12 W	Permanent operation After power-on (to recharge the UPS)
Power supply		DC 10 V to 60 V or AC 100 V to 240 V / DC 110 V to 320 V	
UPS capacitor	Back-up time: ≤ 1 second		Factory settings
EMC Interference immunity/ Transient emissions	Class A		According to IEC/EN 61326-1
Degree of protection	IP20		According to EN 60529
Weight	Approx. 1.9 kg		
Dimensions	166 mm × 105 mm × 126 mm 6.53 in. × 4.13 in. × 4.96 in.		(W × H × D) without mounting rail
Ambient temperature range	–10 °C to 55 °C/50 °F to 131 °F		Without condensation
Storage temperature	–40 °C to 90 °C/–40 °F to 194 °F		Within temperatures ≤ 15 °C or > 55 °C/≤ 59 °F or > 131 °F only for short time
Communication interfaces	Ethernet, Modem		TCP/IP D-Sub
Memory capacity	CF card	Min. 2 GB Max. 16 GB	Standard accessory: 2 GB CF card up to 16 GB possible
Internal clock and external synchronization	± 1 s/day GPS DCF77 or via other SICAM Q80		Battery backed GPS input Sync input

Table 3/28 Technical data

Technical data

Voltage inputs

Parameter	Typical value	Min./max.	Test conditions/remarks
Input	4 or 8 channels for voltage measurement		Single end, isolation for each group
Sampling rate per channel		10 kHz	Network analysis
Bandwidth		0 to 4.1 kHz	– 3 dB, network analysis
Terminal connections	Screw terminal 0.5 to 6 mm² / 0.008 to 0.009 sqin. 10 to 20 AWG (American Wire Gauge)		Screw terminal for rigid or flexible line with 0.5 to 6 mm² / 0.008 to 0.009 sqin. cross-section
Electrical safety Rating		 300 V/CAT IV	 In accordance with EN 61010-1
Measurement category Degree of pollution		600 V/CAT III 2	Voltage inputs V_1 to V_4 or V_1 to V_8 in accordance with IEC 60664
Insulation test voltage		5.4 kV_{rms}	50 Hz, 1 min
Measurement ranges	up to 1000 V_{rms}		Automatic range setting
Overload resistance		1.5 kV_{rms}	DC and 50 Hz, permanent
Input impedance	2.5 MΩ	± 1 %	Differential
Measurement uncertainty Drift	0.04 % ± 8 ppm / $K \times \Delta T_a$	≤ 0.1 % ± 40 ppm / $K \times \Delta T_a$	of ranges $\Delta T_a = \lvert T_a - 25\,°C \rvert$ / $\Delta T_a = \lvert T_a - 13\,°F \rvert$ ambient temperature T_a
Isolation suppression		 > 110 dB > 71 dB > 47 dB	Isolation voltage 1000 V_{rms} DC 50 Hz 1 kHz
Channel crosstalk		 ≤ 110 dB ≤ 85 dB ≤ 60 dB	Test voltage: 1000 V_{rms} DC 50 Hz 1 kHz
Strain voltage (RTI)	20 mV_{rms}		± 100 V, bandwidth: 0.1 Hz to 10 kHz

Current inputs

Parameter	Typical value	Min./max.	Test conditions/remarks
Input	4 channels for current measurement with current probes		Differential, isolated
Terminal connections	Screw terminal 0.25 to 2.5 mm² / 0.0004 to 0.004 sqin. 14 to 24 AWG (American Wire Gauge)		Screw terminal for rigid or flexible line with 0.25 to 2.5 mm² / 0.0004 to 0.004 sqin. cross-section
Electrical safety Rating		 300 V/CAT IV	 In accordance with EN 61010-1
Measurement category Degree of pollution		600 V/CAT III 2	Current inputs I_1 to I_4 in accordance with IEC 60664
Insulation test voltage		5.4 kV_{rms}	50 Hz, 1 min
Measurement ranges	> 1 A ≤ 1 A		5 A connection 1 A connection
Bandwidth		0 to 4.1 kHz	–3 dB, network analysis
Sampling rate per channel		10 kHz	Network analysis
Overmodulation limit		145 % of range	
Overload strength 5 A terminal 1 A terminal		 ≤ 20 A ≤ 100 A ≤ 10 A ≤ 100 A	 Continuous 1 s Continuous 1 s
Input impedance 5 A terminal 1 A terminal		 ≤ 10 mΩ ≤ 20 mΩ	 Differential
Measurement tolerance	0.06 % ± 8 ppm / $K \times \Delta T_a$	≤ 0.1 % ± 60 ppm / $K \times \Delta T_a$	of input range $\Delta T_a = \lvert T_a - 25\,°C \rvert$ / $\Delta T_a = \lvert T_a - 13\,°F \rvert$ ambient temperature T_a
Phase uncertainty		0 to 2.5 kHz	< ± 1 °

Table 3/29 Technical data

Digital inputs

Parameter	Typical value	Min./max.	Test conditions/remarks
Channels/bits	4 digital inputs		Each isolated
Terminal connections	Screw terminal 0.25 to 2.5 mm² / 0.0004 to 0.004 sqin. 14 to 24 AWG (American Wire Gauge)		Screw terminal for rigid or flexible line with 0.25 to 2.5 mm² / 0.0004 to 0.004 sqin. cross-section
Electrical safety Rating	250 V / CAT III		In accordance with EN 61010-1
Measurement category Degree of pollution	2		In accordance with IEC 60664
Insulation test voltage	3.6 kV_{rms}		50 Hz, 10 sec Between channels and chassis
Max. input level V_e		≤ 600 V	Peak-to-peak or DC voltage
Nom. input level V_e	DC 230 V_{rms} / 350 V		
Switching level V_S Unipolar low Unipolar high	< 16 V > 16.8 V	> 14 V > 18 V	Schmitt trigger characteristics Hysteresis 0.04 V typ.
Current input	280 µA	< 500 µA	V_e = −600 V to +600 V
Circuit time Low → high High → low	70 µs 23 µs	< 180 µs < 40 µs	

Digital outputs

Parameter	Typical value	Min./max.	Test conditions/remarks
Channel/bits	4 relay outputs		Mechanical closer
Terminal connection	Screw terminal 0.25 to 2.5 mm² / 0.0004 to 0.004 sqin. 14 to 24 AWG (American Wire Gauge)		Screw terminal for rigid or flexible line with 0.25 to 2.5 mm² / 0.0004 to 0.004 sqin. cross-section
Electrical safety Rating	250 V / CAT III		In accordance with EN 61010-1
Measurement category Degree of pollution	2		In accordance with IEC 60664
Insulation test voltage	3.6 kV_{rms}		Between channels and chassis
Switching time	5 ms	< 8 ms	
Max. switching power		< 1000 VA	
Switching voltage	> 1 V DC	< 250 V_{rms}	Min. switching voltage at 1 mA
Max. switching current		< 1 A < 4 A	AC 250 V cos φ = 1.0 to 0.4 AC 250 V cos φ = 1.0
Contact impedance		< 50 mΩ	
Fuse protection Nominal current (I_N)	5 A	I_N 2 I_N	t_{fuse} ≥ 4 h 30 s > t_{fuse} > 1 s

Table 3/30 Technical data

Technical data

Calibration conditions

Parameter	Typical value	Test conditions/remarks
Temperature	25 °C / 77 °F	± 5 °C / ± 41 °F
Humidity	40 %	± 30 %
Power supply	24 V	60 W power adapter
Input signal	± 1,000 V_{rms} / sine 50 Hz ± 1 A_{rms} / sine 50 Hz	Voltage inputs Current inputs

Evaluations according to standards		
Standard specification	Voltage quality per EN 50160	IEC 61000-4-30, IEC 61000-4-15, IEC 61000-4-7 Power calculation per DIN 40110-1 and -2
	Data search and data comparison across multiple measurements	Optional software module

Synchronization and time base

Parameter	Typical value	Min./max.	Remarks
Time base per device without external synchronization			
Balanced (default)		± 10 ppm	at 25 °C / 77 °F (accuracy of internal time base)
Drift	± 20 ppm	± 50 ppm	−40 °C / −40 °F to + 85 °C / 185 °F operating temperature
Ageing		± 10 ppm	at 25 °C / 77 °F, 10 years

Parameter	GPS	DCF77	IRIG-B	NTP
Time base per device without external synchronization				
Supported format			B002 B000, B001, B003*	Version 4 (downwards compatible)
Precision	± 1 µs →	→	→	< 5 ms after ca. 12 h
Jitter (max.)	± 8 µs →	→	→	
Voltage level	TTL	24 V TTL level LOW active[1)]	24 V TTL level[1)]	–
Input resistance	1 kΩ (pull up)	20 kΩ (pull up)		–
Input connector	D-Sub-9	24 V electrical copper wire[1)] →	→	Ethernet
Shield potential input		System ground →	→	–

Table 3/31 Technical data

* Using BCD information only.
[1] From hardware version CC.

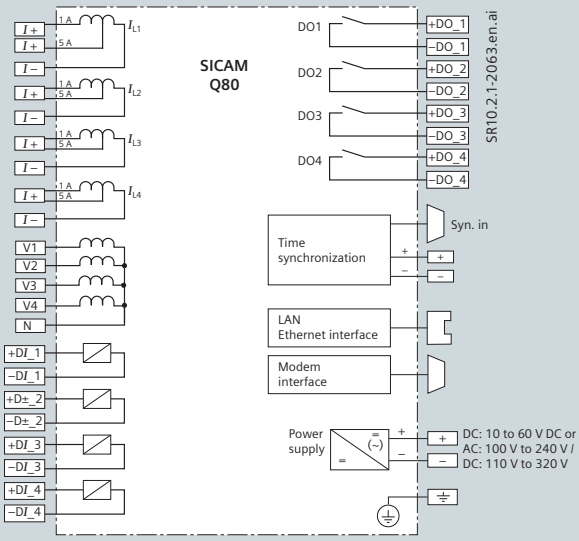

Fig. 4/65 7KG8080 – four-wire connection

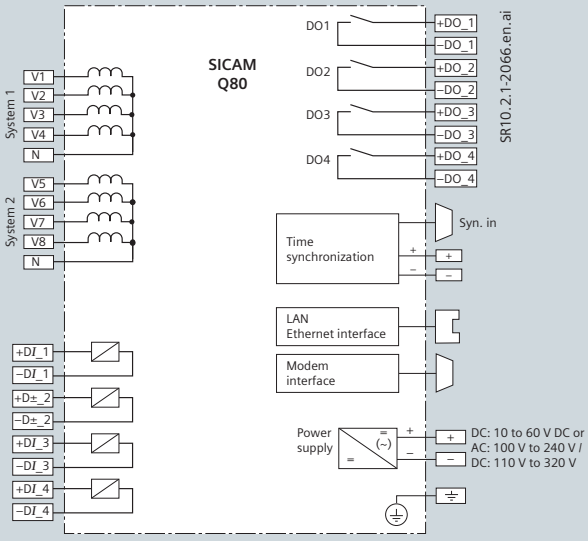

Fig. 4/68 7KG8080 – eight-voltage connection

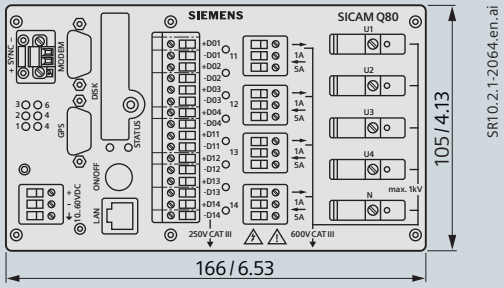

Fig. 4/66 Four-voltage / four-current connection: front view

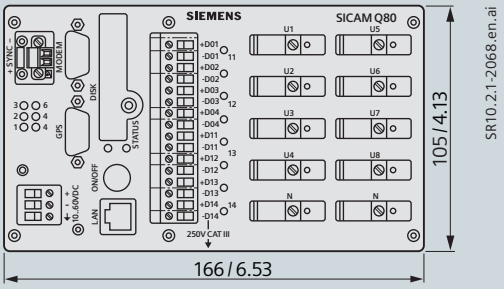

Fig. 4/69 7KG8080 – eight-voltage connection: front view

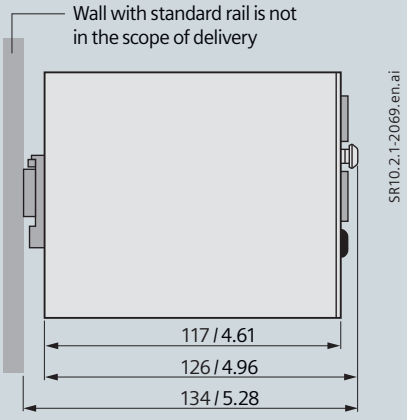

Fig. 4/67 7KG8080: side view

Selection and ordering data

Description	Order No.
SICAM Q80 Power Quality Recorder	**7KG8080-□□A00-0AA0**
– IEC 61000-4-30 / Class A – 2 GB compact flash – 4 binary inputs and 4 binary outputs – Synchronization: DCF77 / GPS / IRIG-B / NTP Sync. – Ethernet interface – SICAM Q80 Manager – Operating instructions: English and German – Modbus TCP Protocol We suggest the following GPS accessories: – Meinberg GPS180AHSx, or – Garmin (18 LVC-5Hz) – Hopf Receiver 6875-FW7.0: 7XV5664-0CA00 (see SIPROTEC price list) **Inputs:** 4 currents / 4 voltages 8 voltages **Power supply:** DC 24 / 60 V V_{aux} AC: 100 V to 240 V / V_{aux} DC: 110 V to 320 V	 **0** **1** **A** **B**
SICAM Q80 – Manager Software for	**7KG8081-1AA00-0AA0**
– Device parameterization – System topology – Online measurement – Power quality reports (e.g. according to EN 50160) – Automatic power quality reporting (Windows schedule) – Excel / ASC II export – Software language: English / German – Operating instructions and system manual: English / German as PDF	
Extra printed system manual	
German English	**E50417-H1000-C420-A1** **E50417-H1076-C420-A1**
Ethernet patch cable	**7KE6000-8GE00-3AA0**
With double shield (SFTP), cross-over connection, with LAN connector on both ends, SICAM Q80 <CE> PC	

Table 3/32 Selection and ordering data

CE conformity and disclaimer of liability

CE conformity

This product conforms to the directives of the Council of the European Communities on the approximation of the laws of the Member States relating to electromagnetic compatibility (EMC Directive 2004/108/EC) and concerning electrical equipment for use within specified voltage limits (Low Voltage Directive 206/95/EC).

This product conforms to the international standard IEC 61000-4 and the European standard EN 50160 for voltage characteristics.

The product is designed for use in an industrial environment according to the EMC standard specification as per IEC 61326-1.

Conformity is proved by tests performed by Siemens AG in line with article 10 of the Council Directives in accordance with the generic standard EN 50160 and IEC 61000-4-30 for Class A measurement.

Disclaimer of liability

This document has been subjected to rigorous technical review before being published. It is revised at regular intervals, and any modifications and amendments are included in the subsequent issues. The content of this document has been compiled for information purposes only. Although Siemens AG has made best efforts to keep the document as precise and up-to-date as possible, Siemens AG shall not assume any liability for defects and damage which result through use of the information contained herein.

This content does not form part of a contract or of business relations; nor does it change these. All obligations of Siemens AG are stated in the relevant contractual agreements. Siemens AG reserves the right to revise this document from time to time.

Document version: 04

Release status: 09.2014

Certificate of Conformity

IEC 61000-4-30 Class A

Siemens SIMEAS Q80

equipped with Garmin GPS18x LVC

(or other GPS receiver with equivalent accuracy and functionality)

IEC 61000-4-30 Ed. 2

230V, 50/60 Hz, L-N U_{din}

61000-4-30 Section	Power Quality Parameter	Class A Compliance	Class S Compliance	Class B Compliance	Remarks
5.1	Power frequency	Yes	Yes	Yes	
5.2	Magnitude of the supply voltage	Yes	Yes	Yes	
5.3	Flicker	Yes	Yes	(N/A)	See Note 1 below
5.4	Supply voltage dips and swells	Yes	Yes	Yes	
5.5	Voltage interruptions	Yes	Yes	Yes	
5.7	Supply voltage unbalance	Yes	Yes	Yes	
5.8	Voltage harmonics	Yes	Yes	Yes	
5.9	Voltage interharmonics	Yes	Yes	Yes	
5.10	Mains signaling voltage	Yes	Yes	Yes	
5.12	Underdeviation and overdeviation	-	-	-	See Note 2 below
4.4	Measurement aggregation intervals	Yes	No	Yes	Class A and Class S are mutually exclusive
4.6	Time-clock uncertainty	Yes	Yes	Yes	
4.7	Flagging	Yes	Yes	(N/A)	
6.1	Transient influence quantities	Yes	(N/A)	(N/A)	See Note 3 below

(N/A) – Not Applicable. There is no requirement in the Standard.
Note 1: Flicker is only defined at 230V, 50Hz and 120V, 60Hz. EUT meets Class A requirements at 230V, 50Hz.
Note 2: Overdeviation and underdeviation parameters are not measured by the Siemens SIMEAS Q80.
Note 3: Transients applied to EUT measuring terminals and power terminals.

This certificate summarizes the results of the PSL IEC 61000-4-30 Power Quality Measurement Methods Compliance Report, document # PSL SIEMENS-009-30, dated 27 August 2009. PSL tested two samples, S/N 140148 and 140149 at 230VAC, 50/60 Hz. Manufacturer states that these samples are representative of the SIMEAS Q80 series.



Siemens SIMEAS Q80

Alex McEachern 27 August 2009
Alex@PowerStandards.com

Statement of IEC 61000-4-30 Compliance

Products – SICAM Q80

SIEMENS



Power Quality devices for all applications

SICAM Q100

Power Monitoring Device und Power Quality Recorder, Class A

siemens.com/powerquality

Products – SICAM Q100

Contents

	Page
Description	4/59
Function overview	4/61
Data availability	4/63
Power quality acquisition and recording	4/65
Recorder types and evaluation	4/67
Parameterization, visualization, and evaluation	4/70
Communication	4/72
System overview	4/73
Voltage quality measurements and operating measurement uncertainty	4/74
Measurements and operating measurement uncertainty	4/75
Connection types and examples	4/76
Variants and dimensions	4/78
Technical data	4/80
Technical data, selection and ordering data	4/84

Universal unit for monitoring power quality and for energy management

SICAM Q100 is a Class A multifunctional measuring device for monitoring power quality according to the IEC 62586-1 (PQI-A-FI) product standard. It is used to acquire, visualize, analyze, and transmit measured electrical variables such as AC current, AC voltage, frequency, power, harmonics, etc. The acquisition, processing and accuracy of measured variables and events are performed according to the IEC 61000-4-30 Class A power quality measurement standard. Long-term data and events are evaluated directly in the device and displayed as a report in accordance with power quality standards (such as EN 50160).

The measured variables can be output to a PC or control center via one of the communication interfaces or shown on a display. In addition to acquiring the power supply quality according to Class A, SICAM Q100 also offers energy management functions such as the acquisition of load profiles and the relationship to different tariffs, as well as the Modbus Master function for connecting RS485 submeters (for example, PAC) and LV circuit breakers (such as 3WL).

Applications

SICAM Q100 is used in single-phase systems as well as three-wire and four-wire systems (with neutral conductors).

This universal device is most valuable for applications where the uninterrupted acquisition of supply quality data (e. g. EN 50160) must guarantee fault-free operation of the loads/consumers connected to the power supply system. In addition to acquiring supply quality data, the unit can also be used for the comprehensive acquisition of other measured electrical variables that are required by the particular application: as part of an automation solution in industrial plants, for energy management and building automation, in commercial applications (assignment of cost centers), and for the comprehensive monitoring of important points in a power company's network. With its Master function, SICAM Q100 makes it possible to integrate and further process data from peripheral devices (for example, a power meter or LV circuit breaker).

Whether the need is for comprehensive supply quality monitoring and logging or for energy management functions (for example, to reduce operating costs): SICAM Q100 is a key component in any power monitoring system.



Fig. 4/70 SICAM Q100

Benefits and key features

- Early detection of supply quality problems thanks to uninterrupted acquisition of important power parameters.
- Manufacturer-independent, comparable measured values for evaluating supply quality are obtained using standardized measurement methods according to IEC 61000-4-30 Class A (0.1% accuracy).
- Flexible "on-board" power quality logging according to EN 50160 performed directly via integrated a web server.
- Power monitoring functions for power control and as a prerequisite for energy management tasks such as identifying potential savings in the peak and base load ranges and identifying unnecessary power consumption.
- Recording of the fourth current channel to acquire neutral conductor current data.
- Highly precise measurements as part of energy management tasks, Class 0.2S according to IEC 62053-22 and ANSI C12.20 for obtaining power, reference, and energy measurements.
- Modbus Gateway and Master functions for easily integrating and displaying RS485 device data (such as PAC3100, 3200, SICAM P50) via a Modbus TCP network.
- Easy operation via integrated web server for parameterization, diagnosis, evaluation, and reporting.
- Interoperability through the use of standard interfaces, protocols (IEC 61850, Modbus TCP), and data formats (PQDIF, Comtrade, and CSV).

Description

Voltage quality – application overview

Voltage quality (also known as power quality) refers to various characteristics in a power supply system. Voltage quality criteria are defined by a number of technical regulations, such as the EN 50160 power quality standard. These criteria describe the main characteristics of voltage at customers' power supply terminals in public low-, medium-, and high-voltage systems. Ultimately, however, quality is determined by the ability of customer systems to correctly perform their tasks.

Most quality problems affect the ultimate consumer directly or are perceived at this level. Today, production plants such as those in the paper and chemical industries are extraordinarily sensitive due to the wide use of microprocessor-supported controlling systems, information processing devices, and power electronics devices. Temporary interruptions of supply and undervoltages can already result in high costs due to, for example, damage to workpieces or tools, plant restarts, etc. Data centers and "provider houses," the number of which is growing, are also concerned about their plants' security of supply because voltage disturbances in these types of enterprises and operating areas can have serious consequences. Voltage measurements and evaluations can be used to determine voltage quality.

As consumers' awareness of energy efficiency grows, quality of supply becomes a major focus. So it is also in the interest of power utilities to monitor power quality, thus ensuring proper and efficient operation and improving the system. A high-quality, reliable power supply also means high customer satisfaction.

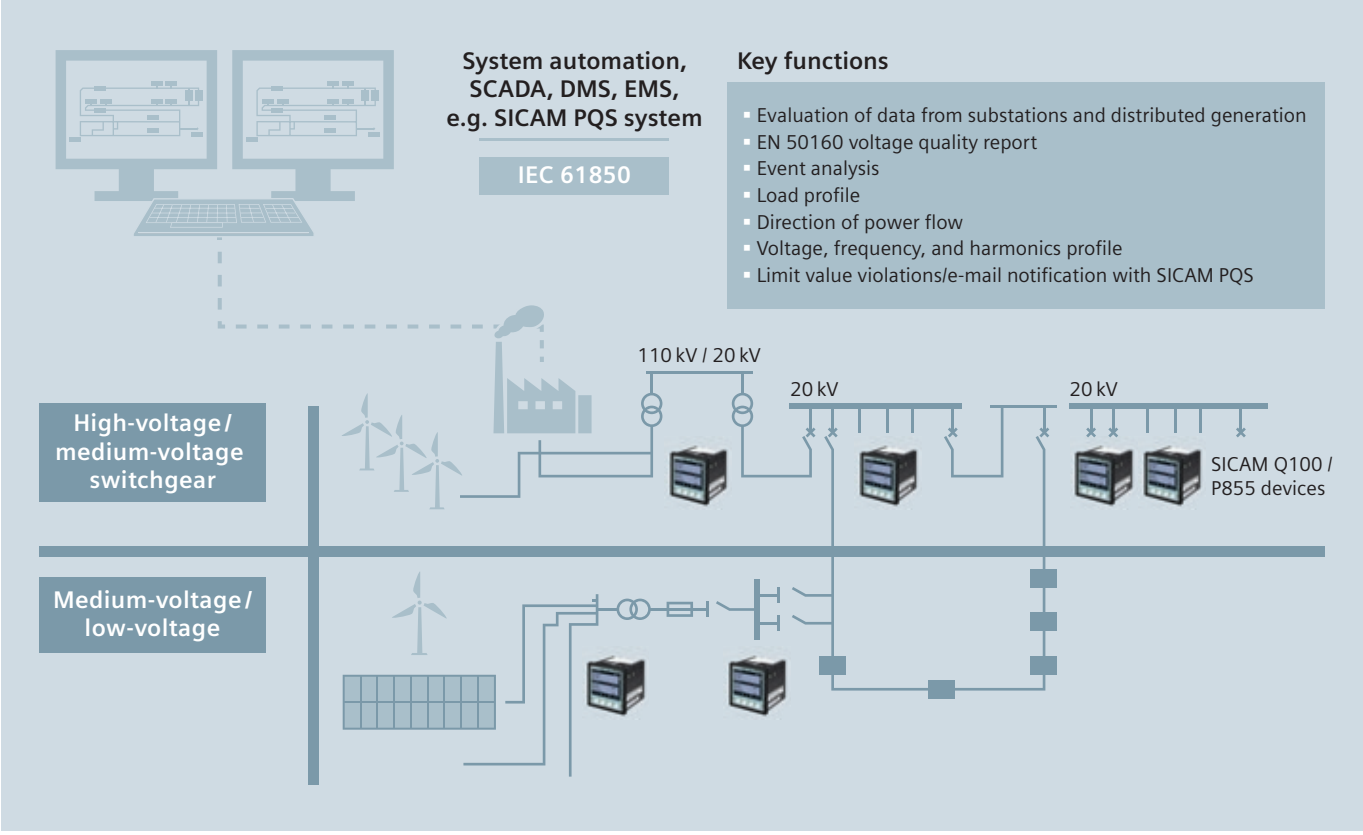

Fig. 4/71 Application – Voltage quality on all voltage levels of the power supply system

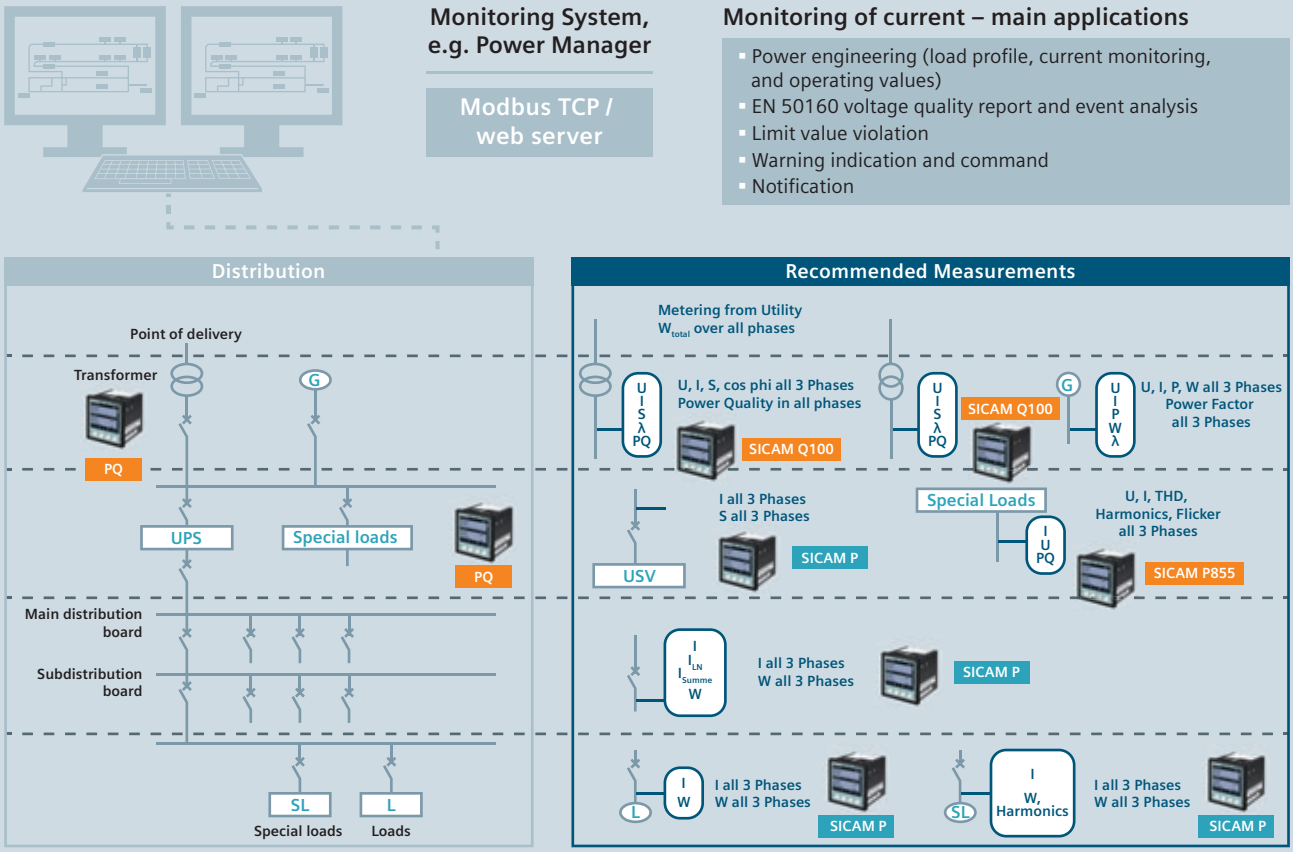

Fig. 4/72 Application – Voltage quality and power monitoring for industry, buildings, and data centers

Device description

SICAM Q100 is a multifunctional measuring device used to acquire, calculate, record, analyze, display, and transmit measured electrical variables. Its key features are:

- Power Monitoring and Power Quality Recorder, including Measurand Recorder for measurement accuracy according to IEC 61000-4-30, Class A
- Web server for parameterization, visualization, and data management
- Galvanically separated voltage measurement inputs
- Transmission of measured values via various communication protocols
- 4 inputs for AC voltage measurements
- 4 inputs for AC current measurements
- 2 binary inputs, for example for load profile synchronization pulses or external triggers
- 2 binary outputs
- Binary expansion (up to 12 inputs and 12 outputs) using SICAM I/O Unit peripheral devices

Communication

SICAM Q100 has one Ethernet interface and one optional electrical RS485 interface. Device parameterization, the transmission of measured data, counts, and messages, as well as time synchronization (via NTP) are supported via Ethernet. The HTTP, Modbus TCP, and IEC 61850 Server communication protocols can be used. The integrated Ethernet switch makes it possible to connect additional devices (such as subordinate SICAM devices) via a Y-cable and integrate them into an existing network using IEC 61850 or another Ethernet protocol.
The optional RS485 interface supports the Modbus RTU communication protocol for the purpose of transmitting measured data, counts, load profiles, and messages, and for time synchronization.

Time synchronization

SICAM Q100 must have an unambiguous time basis during operation to acquire time-relevant data such as voltage events. This guarantees that connected peripheral devices have a uniform time basis for all measured data.

Function overview

The following types of time synchronization can be performed:
- External time synchronization via Ethernet NTP (preferred)
- External time synchronization via field bus using the Modbus RTU communication protocol
- Internal time synchronization via RTC (if external time synchronization is not possible)

Continuous measured value acquisition:
- Alternating voltage U
- Alternating current I
- Power frequency f (fundamental component)
- Active power P (accuracy Class 0.2S; ANSI C12.20 Class 2 and Class 10)
- Reactive power Q
- Apparent power S
- Power measurements W
- Active power factor cos phi
- Measurements up to the 63rd harmonics order
- Interharmonics of voltage and current
- Flicker according to IEC 61000-4-15

Event-specific measured value acquisition:
- Min./max./mean values
- Recording of events such as voltage dips, overvoltages, interruptions
- Limit value violations
- Acquisition of load profiles
- Transient recording

Power management
As part of power management, SICAM Q100 uses the fixed block and rolling block methods to acquire load profiles with all characteristics. Power data is acquired through up to four different tariff ranges (TOU = time of use); the switchover is via external or internal trigger.

Measured value acquisition via recorders
Different recorders can record measured values, events, and load profiles at parameterizable intervals. The following recorder types can be used:
- **Measurand recorder:** Records mean value measured variables according to IEC 61000-4-30 (such as frequency, voltage, etc.) and logs relevant data (such as currents, power, etc.) over a parameterized time period.
- **Trend recorder:** Long-term recording and monitoring of voltage changes over a parameterizable time period, including programmable tolerance ranges; effective values with up to 1/2 period resolution.
- **Fault recorder:** Records measured values for current and voltage using parameterizable triggers.
- **Event recorder:** With 256 sampled values per period, records events in terms of voltage, frequency, and voltage unbalances.
- **Load profile recording:** The load profile reflects the variations in electrical power over time and thus documents the distribution of power fluctuations and peaks. Two methods of load profile recording are supported: the fixed block method and the rolling block method.

The device has a 2-GB memory for logging the recorder data.

Parameterization
Parameterization is performed from a connected PC using an integrated web browser with HTML pages. Selected parameters can also be configured using the function keys on the front of the device.

Evaluations
Power quality values and other events are displayed directly via a web browser with HTML pages. The following evaluations can be used:
- Operational measured values and messages from SICAM Q100 and from the relevant Modbus slave device displayed via HTML and on the display
- Event evaluations und power quality recordings as well as mean values displayed in tables or graphs
- Power Quality Reports generated according to the EN 50160 standard
- Logging of transient data

Data export
Recorded data can be exported in the following standard formats:
- CSV data
- PQDIF data – IEEE1159.3: PQDIF for PQ recordings (events, measurements, logs)
- COMTRADE data – IEC 60255-24/IEEE Std C37.111: Electrical relay – Part 24: Common format for transient data exchange (COMTRADE) for power systems

Automation functions
Upper and lower limit values can be parameterized for up to 16 measured values. Warning indications can be output if these limits are exceeded. Up to four limit value violations are output to the device via the two binary outputs as well as the H1 and H2 LEDs. In addition, all 16 limit value violations can be sent to peripheral devices via Ethernet.

Special feature
Embedded Ethernet switch for the quick and economical integration of additional Ethernet-compatible devices without having to add a supplemental network switch.

Data availability

	Data	Operational measured values (10/12 periods)	Event analysis information (dips, overvoltages, interruptions)	COMTRADE fault recorder file	Trend recorder (1/2 period effective value, event recording) – COMTRADE file	Measurand recorder (30 s, 60 s, 10 min, 15 min, 30 min, 1 h, 2 h)		
	Interface	Modbus TCP, Modbus RTU, IEC 61850, HTML and display	Modbus TCP, IEC 61850, HTML and display	IEC 61850, export	IEC 61850, HTML visualization, export as PQDIF	IEC 61850 protocol (m PQDIF format), HTML visualization, export as PQDIF, CSV		
	Type	Values	Values	COMTRADE	PQDIF	Mean values	Min. values	Max. values
AC voltage	$U_{L1, L2, L3}$	x	x[1]	x	x	x	x	x
	$U_{L12, 23, 31}$	x	x[1]	x	x	x	x	x
	U_N	x				x	x	x
	U_{tot}	x				x	x	x
	U_{unbal}	x				x	x	x
AC current	$I_{L1, L2, L3}$	x		x		x	x	x
	I_0	x				x	x	x
	I_{tot}	x				x	x	x
	I_{unbal}	x				x	x	x
Active power factor	cos φ (L1), (L2), (L3)	x				x	x	x
	cos φ	x				x	x	x
Power factor	PF_{L1}, PF_{L2}, PF_{L3}	x				x	x	x
	PF	x				x	x	x
Phase angle	φ_{L1}, φ_{L2}, φ_{L3}	x				x	x	x
	φ	x				x	x	x
Frequency	f (power freq.)	x						
	10 s freq (10 freq.)					x[2]	x[2]	x[2]
Harmonics, voltage, amount	H_U_{L1-x}, U_{L2-x}, U_{L3-x}	x[5]				x	–	x
Harmonics, current, amount	H_I_{L1-x}, H_I_{L2-x}, H_I_{L3-x}	x[5]				x[6]	–	x[6]
THD, voltage	THD_U_{L1}, THD_U_{L2}, THD_U_{L3}	x				x	x	x
THD, current	THD_I_{L1}, THD_I_{L2}, THD_I_{L3}	x				x	x	x
Voltage interharmonics	HI_V_{a-y}, HI_V_{b-y}, HI_V_{c-y}	x[6]				x[6]	–	x[6]
Current interharmonics	HI_I_{a-y}, HI_I_{b-y}, HI_I_{b-y}	x[6]				x[6]	–	x[6]
Flicker (short)	P_{st1}, P_{st2}, P_{st3}					x[3]	x[3]	x[3]
Flicker (long)	P_{lt1}, P_{lt2}, P_{lt3}					x[4]	x[4]	x[4]
Active power factor	P_{L1}, P_{L2}, P_{L3}	x				x	x	x
	P	x				x	x	x
Reactive power	Q_{L1}, Q_{L2}, Q_{L3}	x				x	x	x
	Q	x				x	x	x
Apparent power	S_{L1}, S_{L2}, S_{L3}	x				x	x	x
	S	x				x	x	x
Active energy – supply	WP_{L1}, WP_{L2}, WP_{L3}_Supply	X – Cumulated						
	WP_Supply	X – Cumulated						

Table 4/33 Data availability

Data availability

	Data	Operational measured values (10/12 periods)	Event analysis information (dips, overvoltages, interruptions)	COMTRADE fault recorder file	Trend recorder (1/2 period effective value, event recording) – COMTRADE file	Measurand recorder (30 s, 60 s, 10 min, 15 min, 30 min, 1 h, 2 h)		
	Interface	Modbus TCP, Modbus RTU, IEC 61850, HTML and display	Modbus TCP, IEC 61850, HTML and display	IEC 61850, export	IEC 61850, HTML visualization, export as PQDIF	IEC 61850 protocol (m PQDIF format), HTML visualization, export as PQDIF, CSV		
	Type	Values	Values	COMTRADE	PQDIF	Mean values	Min. values	Max. values
Active energy – reference	WP_{L1}, WP_{L2}, WP_{L3}_Reference	X – Cumulated						
	WP_Reference	X – Cumulated						
Reactive energy – inductive	WQ_{L1}, WQ_{L2}, WQ_{L3}_Inductive	Cumulated						
	WQ_Inductive	X – Cumulated						
Reactive energy – capacitive	WQ_{L1}, WQ_{L2}, WQ_{L3}_Capacitive	X – Cumulated						
	WQ_Capacitive	X – Cumulated						
Apparent energy	WS_{L1}, WS_{L2}, WS_{L3}	X – Cumulated						
	WS	X – Cumulated						
Tariff (TOU) – power values – Tariff 1 to 4	WP_SUP_Tariff_1-4, WP_DMD_Tariff_1-4, WQ_IND_POS_Tariff_1-4, WQ_CAP_NEG_Tariff_1-4, WQ_IND_NEG_Tariff_1-4, WQ_CAP_POS_Tariff_1-4, WQ_IND-Tariff_1-4, WQ_CAP-Tariff_1-4, WS_Tariff_1-4	X – Cumulated						
Load profile data	PRef, PSupply, QRef, QSupply, S	Last interval completed				x[7]	x[7]	x[7]

Table 4/33 Data availability

[1] Event information according to EN 50160, e.g. voltage dip, overvoltage, interruption.
[2] Frequency is permanently defined with a 10 second mean value recording.
[3] IEC 61000-4-15: Flicker P_{st} is permanently defined with a 10-minute recording.
[4] Flicker P_{lt} is permanently defined with a 2-hour recording.
[5] Available as of 1st to 63rd order.
[6] Available as of 1st to 49th order.

[7] – The load profile data for the current and most recently completed periods is output via the communication interfaces.
– Data can be transmitted via the Modbus TCP, Modbus RTU Master, and IEC 61850 communication protocols.
– The load profile data can be displayed in the user interface or downloaded in CSV format. The load profile data does not appear on the display.
– Load profile data mean values can be calculated from cumulated power or arithmetic power demand.

To learn more about data availability and measured variables, refer to the SICAM Q100, 7KG95xx System Manual.

Functions of the IEC 61000-4-30 Ed. 2 measurement system
SICAM Q100 devices serve to measure voltage quality according to IEC 61000-4-30 Ed. 2 and to perform other measurements in single-phase and multi-phase supply systems. The measurement system is implemented according to Class A, meaning that the functional scope, measuring ranges, and accuracy are those of Class A measuring devices. The basic measuring interval for determining the values of mains voltage, mains voltage harmonics, and mains voltage unbalance is a 10-period interval for 50-Hz supply systems and a 12-period interval for 60-Hz supply systems. The10/12-period interval values are aggregated over additional time intervals.

10-minute interval
The value aggregated in a 10-minute interval is stamped with the absolute time (e.g. 01:10:00). The time is indicated at the end of the aggregation interval. The values for the 10-minute interval are calculated without interruption from 10/12-period intervals.

Flagging concept
During voltage dips, overvoltages, and interruptions, the measurement method may supply implausible data for other measured values (such as frequency measurements or voltage harmonics). The flagging concept prevents individual events from being accounted for multiple times by different measured variables (e.g. a dip simultaneously recorded as dip and frequency change).

Measurements for evaluating voltage quality
Mains voltage level: This measurement determines the effective value of mains voltage over a 10-period interval for 50-Hz supply systems and over a 12-period interval for 60-Hz supply systems. All 10/12-period intervals are detected without interruption or overlapping.

Voltage events – interruption, voltage dip, overvoltage, and transients
The basic measurement of the effective value U_{eff} of a voltage event determines the effective value U_{eff} (1/2) for each individual measuring channel. The limit value for voltage, hysteresis, and duration (t) characterizes one voltage event for each individual measuring channel.
Mains voltage unbalance: Determined on the basis of the balanced component method. In the case of unbalance, both the positive-sequence component U1 and the negative-sequence component U2 are determined.
Mains voltage harmonics: Uninterrupted 10/12-period measurement of a harmonic subgroup $U_{sg,n}$ according to IEC 61000-4-7. The total distortion is calculated as the subgroup total distortion (THDS) according to IEC 61000-4-7. Measurements are performed up to the 63rd harmonics order and recorded up to the 50th harmonics order.

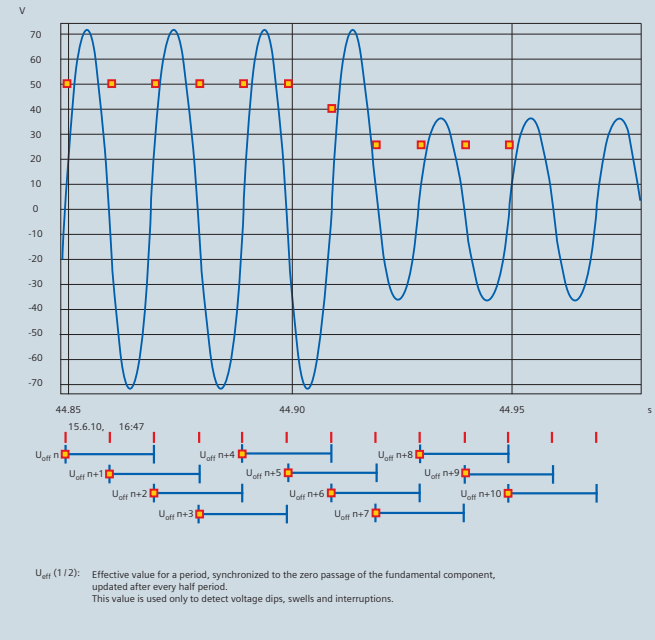

Fig. 4/73 Representation of the 1/2 cycle RMS measurement method, e.g. for a voltage dip

Power quality acquisition and recording

Flicker: Uninterrupted recording according to IEC 61000-4-15. The following measurements are performed simultaneously for all three-phase voltages: instantaneous flicker P_{inst} (10/12 measurement interval), short-term flicker strength P_{st} (10 min), and long-term flicker strength P_{lt} (2 h).

Transient recording: SICAM Q100 records temporary overvoltages as transients if the instantaneous value of the primary rated voltage exceeds the parameterized reference value at multiple sampling times. SICAM Q100 records the following data and values during transient analysis and displays them in the transient list window:

- Number of events
- Transient's start time (timestamp with date and time)
- Affected phase (a, b, c)
- Transient duration
- Relative value (in %) up to 200% of the primary rated voltage: If the primary rated voltage is exceeded by more than 200%, the analysis will show only > 200%.

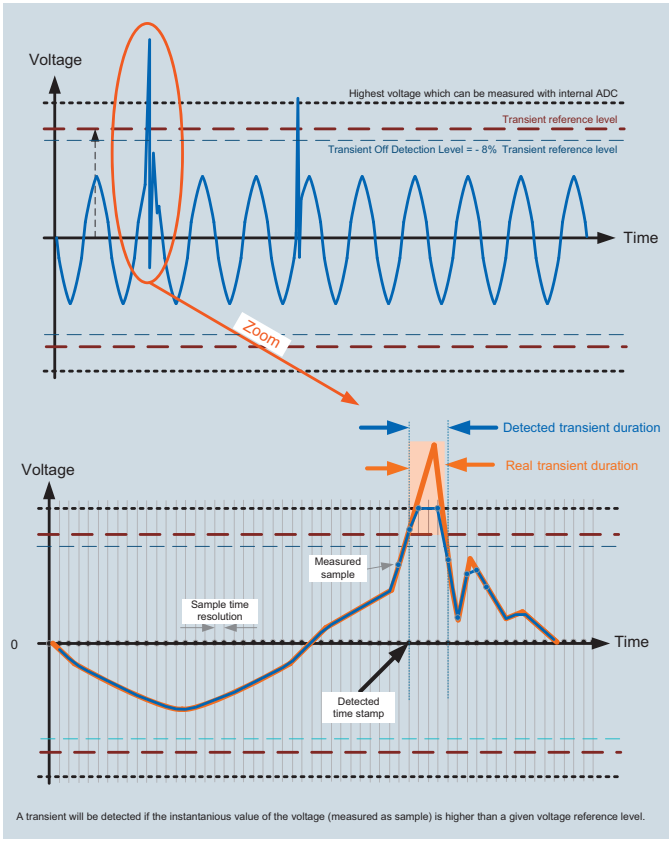

Fig. 4/74 Representation of the measurement system concept, e.g. when a transient is detected

Recorder functionality and applications

In addition to standard measured value acquisition, SICAM Q100 offers various recorders for monitoring and analyzing power quality, as well as power management data for evaluating the load profile.

Recording	Measured variables	Storage interval/storage method	Application
Measurand recorder	Frequency	10 s (permanently set)	Long-term monitoring of mean values, e.g. to evaluate power quality according to EN 50160
	Mains voltage level	10 min (30 s, 1 min, 10 min, 15 min, 30 min, 1 h, 2 h)	
	Mains voltage unbalance		
	Mains voltage harmonics and interharmonics		
	Additional data (e.g. power values, min/max values, etc.)		
	Flicker	P_{st} determined over 10 min.; P_{lt} over 2 h (12 P_{st} values)	Monitoring of power quality according to IEC 61000-4-15
Event recorder	Voltage dips Voltage interruptions	Residual voltage U_{rms} (1/2) and timestamp (duration)	Classification of voltage and frequency events, e.g. according to EN 50160, ITIC curve
	Voltage swells	Max. overvoltage U_{rms} (1/2) and timestamp (duration)	
Trend recorder	U_{rms} (1/2) period	For measured value changes (as percentage or absolute) and cyclic (time interval)	Long-term monitoring and recording of voltage U_{rms} (1/2) period for precise visualization and subsequent analysis of voltage events according to power quality grid codes
Fault recorder	Voltages, currents	Voltage/current fluctuation trigger, acquisition of sampled values (max. 3 s)	Sampled values (fault record) recording to determine and analyze causes of power quality problems
Load profile recording	Load profile	Fixed block or rolling block method	Determination of load profile for power supply and consumption

Table 4/34 Recorders and applications

Recorder types and evaluation

Measurand recorder

The measurand recorder records measured values for determining power quality as well as various other measurements (for example, minimum/maximum values). Recording of the following measured values can be parameterized in the user interface:

- PQ measurements for determining power quality
- Averaging intervals for frequency (permanently set to 10 s)
- Averaging intervals for voltage, voltage unbalance, harmonics, and interharmonics (30 s, 60 s, 10 min, 15 min, 30 min, 1 h, 2 h)
- Flicker: Short-term flicker strength P_{st} (10 min) and long-term flicker strength P_{lt} (2 h)
- Additional data: Current, current unbalance, active power, apparent power, reactive power, THD of voltage, THD of current, power factor, active power factor, phase angle, energy values
- Recording of minimum values (mean values) and recording of maximum values (mean values)

The measuring interval can be set in increments ranging from 30 seconds to 2 hours. The interval for frequency measurement is permanently set to 10 seconds.

Trend recorder

The trend recorder guarantees the continuous recording and long-term monitoring of the U_{eff} (1/2) voltage. If the measured variable changes over the effective value last detected during the parameterized measuring interval, exceeding or falling below the set tolerance range, this new effective value is recorded.

Event recorder

The event recorder records PQ events only (voltage, frequency, voltage unbalances).

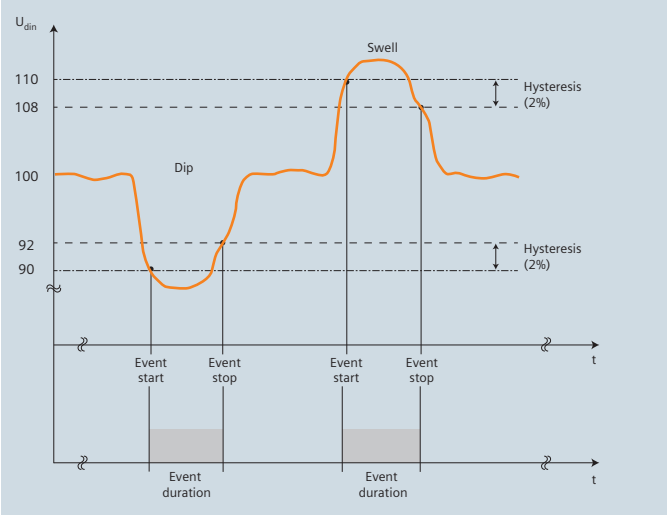

Fig. 4/75 Recording by the event recorder: overvoltages and undervoltages

Fault recorder

The fault recorder records 2048 sampled values per 10/12 period in programmable time units. The fault recorder functionality can be activated for the voltage and current measured variables. For event analysis, a pretrigger time (pretrigger ratio in %) can be set, which allows the history of the measured value to be analyzed prior to the fault's inception.

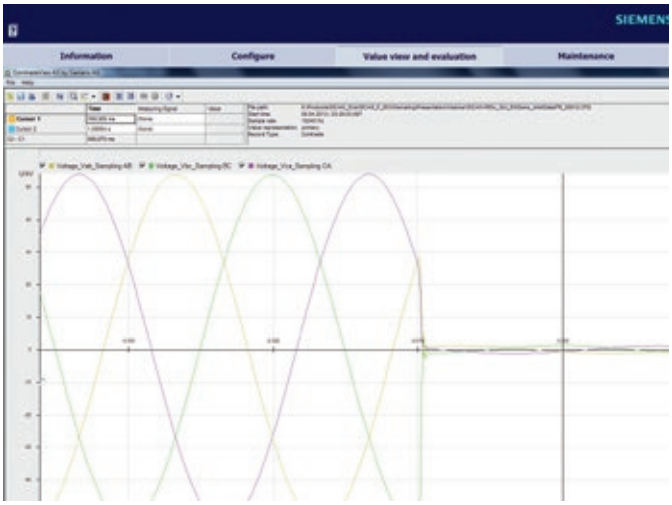

Fig. 4/76 Fault record in COMTRADE view using COMTRADE Viewer software and SIGRA plug-in

Load profile recording

The load profile reflects system behavior and documents the distribution of power fluctuations and peaks. The recordings help to identify potential savings in the peak and base load ranges. The appropriate recording and visualization of power flows in the system permits a transparent analysis of the energy flow, making it possible to optimally configure the process in terms of energy. The measured load profile data thus obtained permits a preliminary evaluation of existing savings potential while also serving as a basis for intelligent, efficient power management.

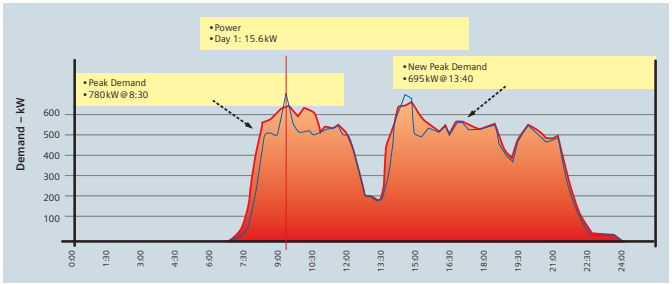

Fig. 4/77 Load profile

SICAM Q100 supports two load profile recording methods: fixed block and rolling block.

Fixed Block: The default setting is a 15-minute measuring period; the number of subperiods is set to 1. At the end of each measuring period, the load profile data is calculated, stored in the ring buffer and, if necessary, forwarded or displayed on the user interface.

Rolling Block: With this method, a measuring period comprises 2 to 5 subperiods, depending on parameterization. The duration of a measuring period is based on the number of subperiods and the programmed duration of the subperiods. The figure below shows the sequence of measuring periods during load profile recording:

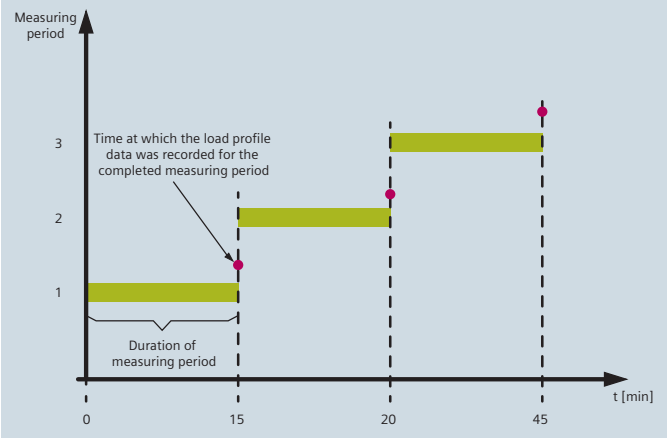

Fig. 4/78 Load profile recording using the fixed block method

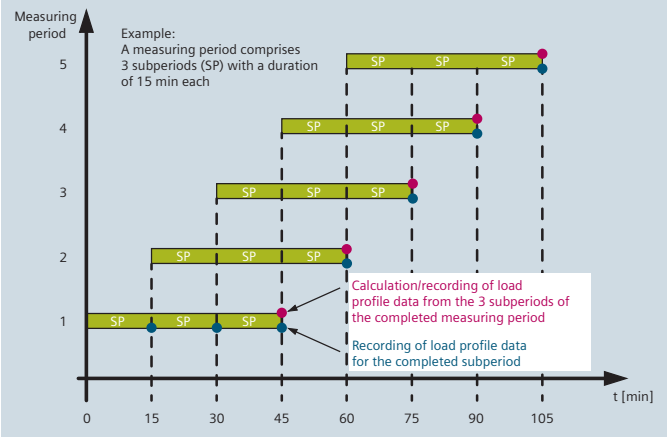

Fig. 4/79 Sequence of measuring periods for recording the load profile using the rolling block method

The load profile is stored in the device's ring buffer, is available via the communication interfaces, and can be output as a CSV file. Load profile recording can be synchronized or unsynchronized. Synchronization is via an external or internal trigger. The arithmetic power demand values and extreme values for each subperiod are stored in the ring buffer. The cumulated power values can be retrieved via the communication interfaces or the user interface.

The load profile data is stored in a ring buffer with up to 4000 data records. Each new data record overwrites the oldest record. Each data record contains the power demand values, minimum/maximum values, a timestamp, and the status information for a completed subperiod.

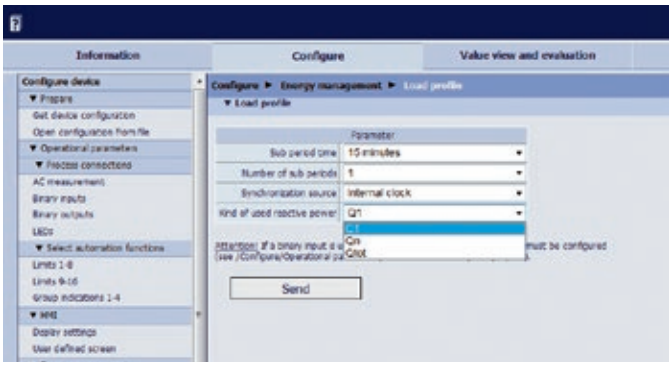

Fig. 4/81 Load profile

Historic load profile data

SICAM Q100 records the following historic measured values:

Measure-ment	Cumulated power values	Arithmetic power demand values	Maximum values	Minimum values
P_{Import}	x	x	±x	±x
P_{Export}	x	x		
Q_{Import}	x	x	±x	±x
Q_{Export}	x	x		
S	x	x	x	x

Table 4/35 Historic load profile data

Tariffs

SICAM Q100 supports up to four power meter tariffs for supplied or consumed active, reactive, and apparent energy. If the tariffs are changed via binary inputs, up to 2 tariffs can be set. If tariff change is controlled, up to 4 tariffs can be set. The tariff is changed via external interfaces. A tariff time change is possible only from a subordinate system.



Fig. 4/80 Tariff analysis

Parameterization, visualization, and evaluation

Device parameterization

SICAM Q100 devices are parameterized from a connected PC using the web browser integrated in the device.

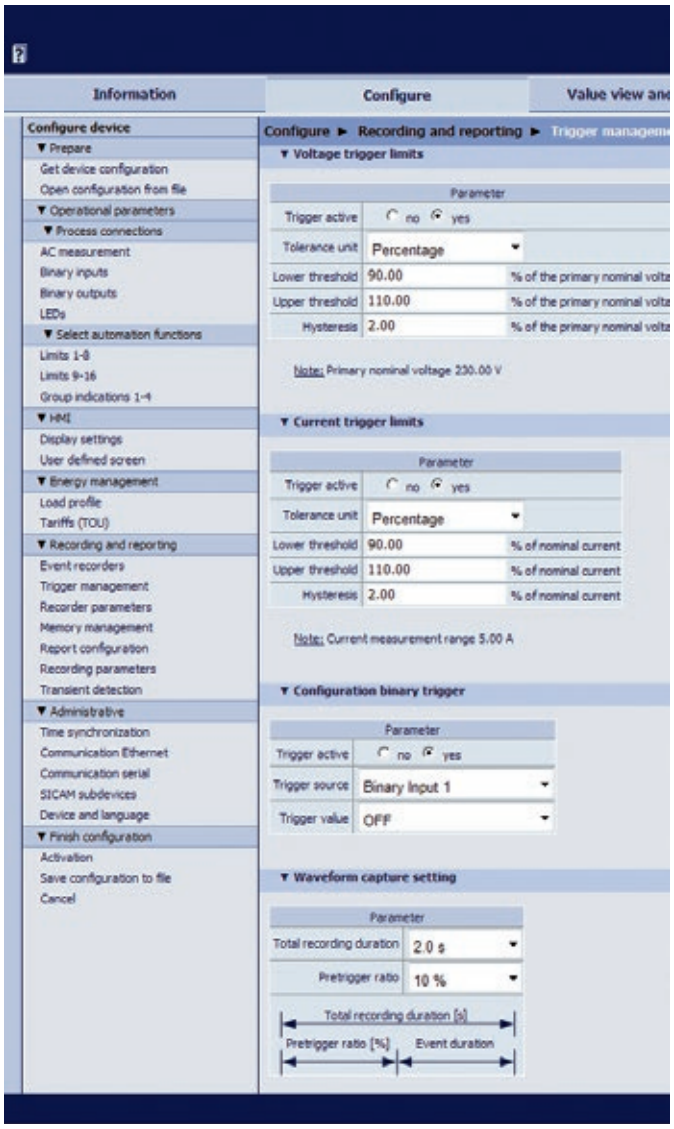

Fig. 4/82 Configure tab, Trigger Management Input/Output window

Visualization of values

Depending on which operating parameters are selected, the input/output window displays either the measured values in the corresponding unit of measure or a tabular list that is updated every 5 seconds.

- Operational measured values
- Voltage harmonics
- Current harmonics
- Interharmonics
- Power and energy
- Binary outputs
- Limit values
- Group indications
- Flicker

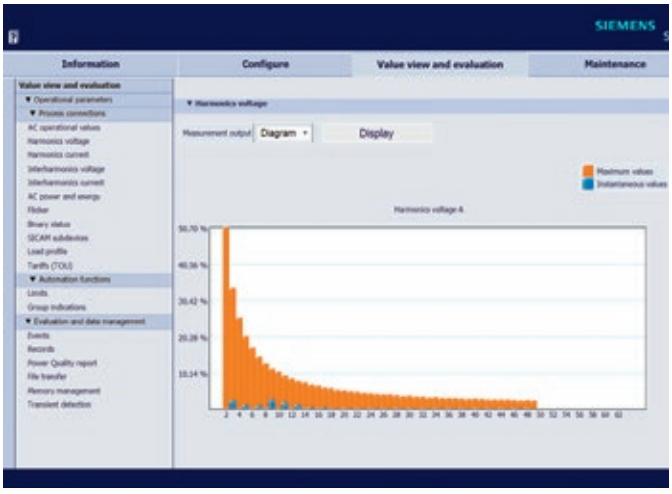

Fig. 4/83 HTML display of harmonics

Voltage quality data

With SICAM Q100, the evaluation of recorded voltage events (such as overvoltages, undervoltages, interruptions, etc.), the generation of the PQ report according to EN 50160, data transmission, and memory management are performed directly in the device via HTML. A calendar function is used to set the start and end times for the PQ report. The report can be generated, printed, saved, and edited from the SICAM Q100 HTML page.

Configuration of power quality reports

The report configuration function can be used to set PQ threshold values. Threshold values can be adapted to the installation environment and various settings can be entered, for example, to generate standardized reports according to EN 50160 NS&MS or EN 50160 HS, or to generate user-defined reports.

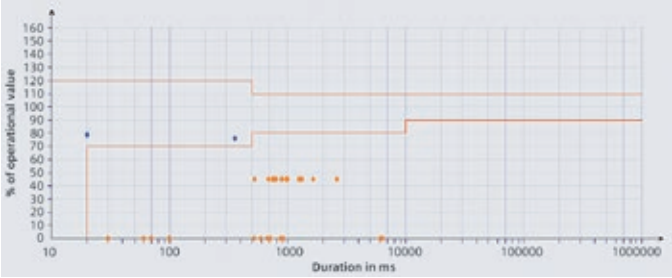

Fig. 4/84 Evaluation of voltage events

Recordings

With support from COMTRADE Viewer and the SIGRA plug-in, SICAM Q100 can display the following recordings:

- Measurements for visualizing mean, minimum, and maximum values in tables or graphs.
- Trend recordings with resolution up to 1/2 period for visualizing voltage quality events.
- Fault recordings of triggered voltages and currents. The signals can be downloaded and then displayed on a PC using COMTRADE Viewer.

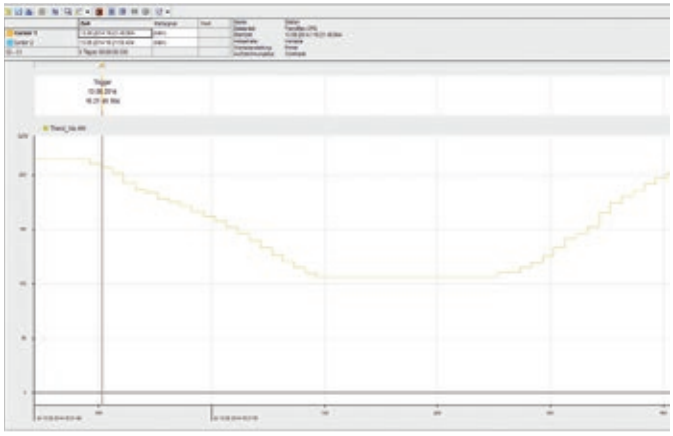

Fig. 4/85 Analysis of voltage events

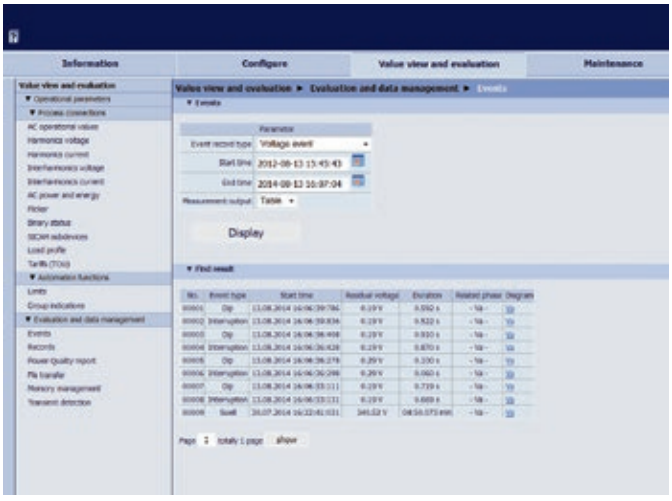

Fig. 4/86 Measured Value Display and Analysis tab, "Events" Input/Output window, voltage events

Data transmission and download

Via IEC 61850, stored data from SICAM Q100 can be transmitted from the 2-GB memory, exported, or downloaded manually via HTTP. The following data formats are supported:

- Measurements: PQDIF and CSV files
- Fault recordings: COMTRADE files
- Trend recordings: PQDIF files

Selected data can be flexibly downloaded using the calendar function.

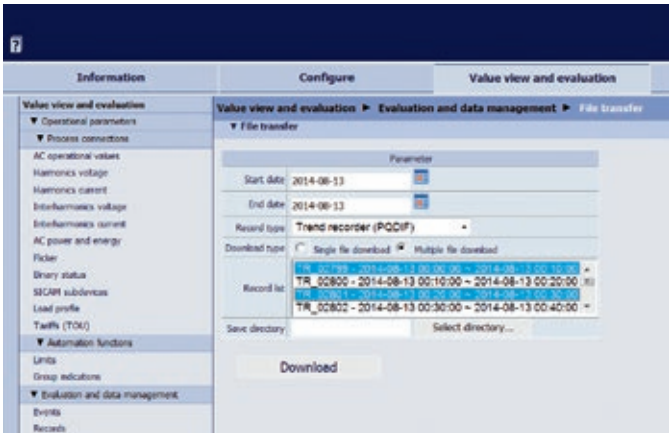

Fig. 4/87 Data transmission and down

Communication

SICAM Q100 has an Ethernet interface and an optional electrical RS485 interface. Device parameterization, transmission of measured data, counts, and messages, as well as time synchronization via NTP are supported via Ethernet.
The HTTP, Modbus TCP, and IEC 61850 Server communication protocols can be used. The integrated Ethernet switch makes it possible to connect additional devices (such as subordinate SICAM devices) via a Y-cable and integrate them into an existing network using IEC 61850 or another Ethernet protocol.
The optional RS485 interface supports the Modbus RTU communication protocol for the purpose of transmitting measured data, counts, load profiles, and messages, and for time synchronization.

Ethernet
- Ethernet 100 Base-T with RJ45 connector
- Integrated 2-port Ethernet switch with external cable switch (for configuring line topologies with Ethernet and for reducing costs for external Ethernet switches)

Serial
- RS485 half-duplex with D-SUB connector
- Support for various baud rates (1200 – 115,200 bit/s) and parities (even/odd/none)

Data transmission protocols and functions
- Modbus TCP (server) with up to 4 connections/Modbus RTU Slave
- Modbus RTU Master
- Modbus TCP/RTU Gateway
- SICAM I/O sub-devices UDP connection (2)
- IEC 61850 (server) with up to six connections
- NTP client (redundant), SNMP (server), HTTP (server)

When SICAM Q100 is used as a stand-alone analyzer, data and information can be accessed directly via HTML pages, displayed, and flagged. Other export functions such as PQDIF, CSV, and COMTRADE are available directly from the device. Additional programs such as SIGRA and COMTRADE Viewer can be used to further analyze fault records.
SICAM Q100 is able to communicate flexibly with automation systems and evaluation stations via standard protocols such as IEC 61850 and Modbus TCP. With IEC 61850 Ed. 2, historical data such as power quality and event recordings can be transmitted to the SICAM PQS system in standard data formats such as PQDIF and COMTRADE.
In addition, Modbus TCP can be used to monitor all device operating parameters, protocols, and indications, as well as information on voltage events.
The integrated Ethernet switch permits the integration of additional devices via a Y-cable. An external Ethernet switch can also be used to expand the I/O functions – for example, to connect up to two subordinate SICAM I/O Unit 7XV5673 devices.
Via the optional RS485 interface, SICAM Q100 also provides Modbus Gateway and a Master functions. The Gateway functionality permits the quick and easy integration of other RS485 devices – such as SENTRON PAC 3x00/4200, SICAM P50, and 3VL/3WL low-voltage circuit breakers – into the Modbus TCP or IEC 61850 network.
The Modbus Master function makes it possible to view and monitor data from up to 8 of the above-mentioned devices on the display or via HTML page.

Application 1: The device is installed as a standalone device for uninterrupted recording of all relevant parameters relating to power quality, event analysis, and power management.
Application 2: In addition to Application 1, the device provides binary expansions using up to two SICAM I/O Unit devices for flexible status monitoring and external trigger functions.
Application 3: SICAM Q100 uses the RS485 interface to implement the Modbus Master and Modbus Gateway functions. Connected and parameterized SICAM sub-devices output indications via their binary inputs and outputs.

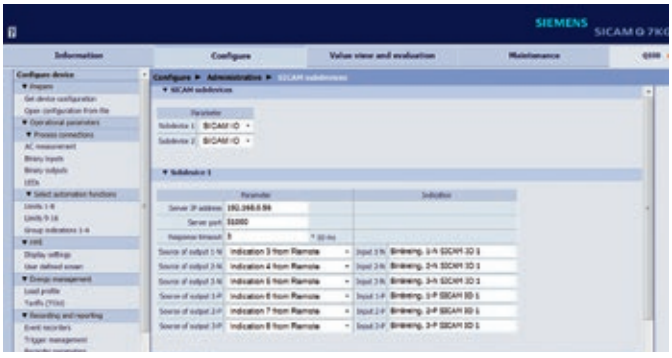

Fig. 4/89 Indications from SICAM sub-devices

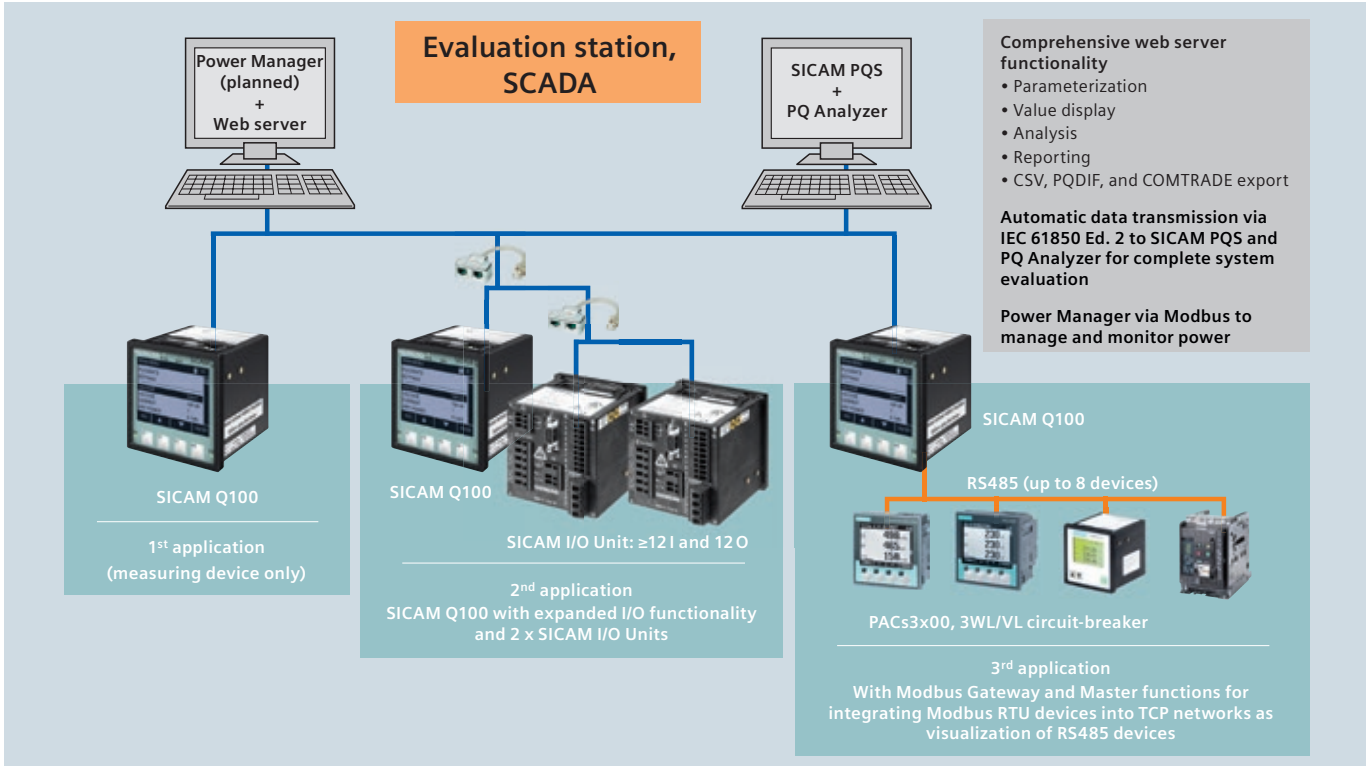

Fig. 4/88 Sample application

Voltage quality measurements and operating measurement uncertainty

Voltage quality measurements and operating measurement uncertainty according to the IEC 62586-1, Class A product standard, and the power quality standards IEC 61000-4-30, Ed. 2, IEC 61000-4-7, and IEC 61000-4-15

Parameter	Unit	Uncertainty	Measuring range	Comments
Frequency	Hz	±10 MHz	42.5~57.5 Hz (50 Hz) 51~69 Hz (60 Hz)	Mains voltage level must be > 2 V!
Supply level	U	±0.1% of U_{din}	10 %~150 % U_{din}	**Voltage $U_{L-N/PE}$ (star connection)** – AC 57.73 V to 400 V (autorange) – up to AC 230 V: up to 200% measuring range – > AC 230 V to 400 V: up to 200% measuring range and 15% overvoltage UL conditions: – up to AC 170 V: up to 200% measuring range – > AC 170 V to 300 V: up to 200% measuring range and 15% overvoltage
				Voltage U_{L-L} (delta connection) – AC 100 V to 690 V (autorange) – up to AC 400 V: 200% measuring range – > AC 400 V to 690 V: up to 200% measuring range and 15% overvoltage UL conditions: – up to AC 290 V: up to 200% measuring range – > AC 290 V to 520 V: up to 200% measuring range and 15% overvoltage
Flicker	–	±5%	0.2~10.0 P_{st}	Accuracy P_{inst}: ±8%
Dips, overvoltage	U, s	Amplitude ± 0.2% U_{din} Duration +/- 1 period	N/A	
Interruptions	U, s	Duration +/- 1 period	N/A	
Unbalance	%	±0.15%	0.5~5% u2 0.5~5% u0	
Voltage harmonics	% or U	IEC61000-4-7 Class I	10%~200% of Class 3 from IEC 61000-2-4	U_m > 1% U_{din}: ±5% U_m U_m < 1% U_{din}: ±0.05% of U_{din}

Table 4/36 Voltage quality measurements and operating measurement uncertainty

U_{din}: Primary rated voltage, corresponds to primary rated voltage from SICAM Q100
U_m: Measured value
U_{rated}: Rated voltage

Measurements and operating measurement uncertainty

Measurements	Unit	Rated value	Measuring range	Operating measurement uncertainty
Current I according to parameterization	A	AC 5 A	1% to 200% I_{rated}	±0.4% at 1% up to 5% I_{rated} ±0.2% at 5% up to 200% I_{rated}
Current unbalance I_{unbal}	%	–	0% to 100%	±0.2%
Active power P + Reference, – Supply	W	–	–	±0.5%, Class 0.2S according to IEC 62053-22; ANSI C12.20 Class 2 and Class 10
Reactive power Q + Inductive, – Capacitive	var	–	–	±0.5%, Class 2 according to IEC 62053-24, Class 0.5S
Apparent power S	VA	–	–	±0.5%
Power factor PF	–	–	0 to 1	±1%
Active power factor cos phi	–	–	–1 to +1	± %
Phase angle phi	Degree	–	–180° to +180°	±2°
Active energy WP Reference	Wh	–	–	±0.2%
Active energy WP Supply	Wh	–	–	±0.2%
Reactive energy WQ Inductive	varh	–	–	±0.2%
Reactive energy WQ Capacitive	varh	–	–	±0.2%
Apparent energy WS	VAh	–	–	±0.2%
Total harmonic distortion of voltage THD U_L	%	–	0% to 100%	±0.5%
Total harmonic distortion of current THD I_L	%	–	0% to 100%	±0.5%
Harmonics of current H_xI_L	A	–	–	Condition: $I_m \geq 10\%\ I_{rated}$ Maximum error: ±5% I_m
				Condition: $I_m < 10\%\ I_{rated}$ Maximum error: ±0.5% I_{rated}

Table 4/37 Measured variables and their operating measurement uncertainty

Measuring circuit	Accuracy
Voltage to U_{L1-N}	0 V to 2 V: invalid > 2 V: 10 mHZ
Voltage to U_{L2-N}	
Voltage to U_{L3-N}	

Table 4/38 Accuracy of frequency measurement

Connection types and examples

Using SICAM Q100 in power systems

SICAM Q100 can be operated in IT, TT and TN power systems.

Examples of standard applications

The input circuits below are intended as examples. SICAM Q100 can be connected to the maximum admissible current and voltage values even without in-line current or voltage converters. Required voltage converters can be operated in a star or delta connection.

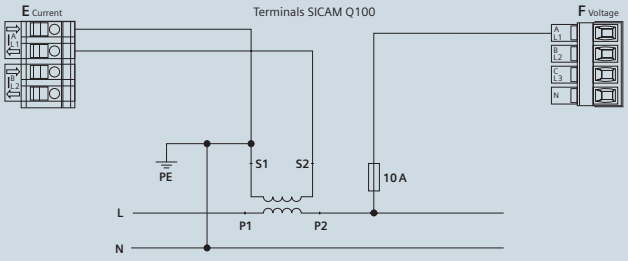

Fig. 4/90 Connection example: single-phase system, 1 current converter

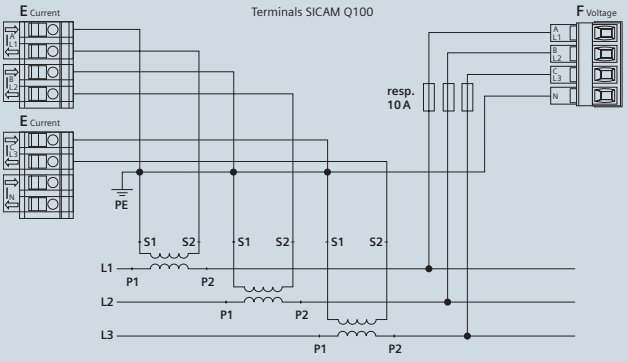

Fig. 4/93 Connection example: three-wire system, 3 current converters, any load

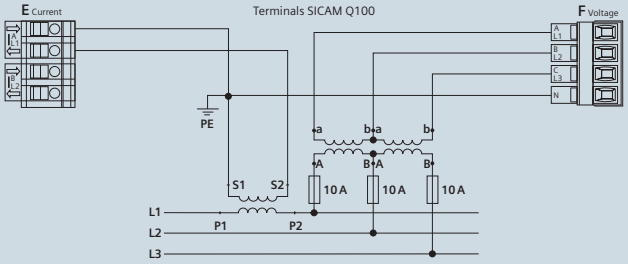

Fig. 4/91 Connection example: three-wire system, 2 voltage converters and 1 current converter, equal load

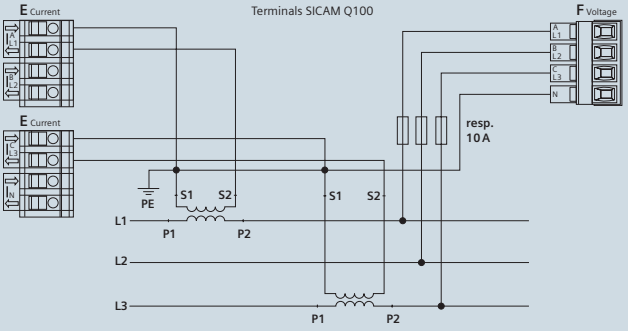

Fig. 4/94 Connection example: three-wire system, 2 current converters, any load

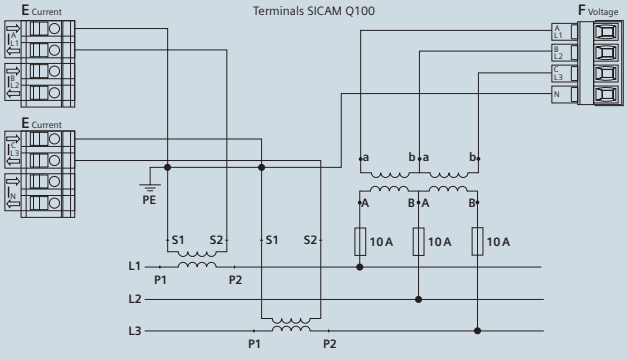

Fig. 4/92 Connection example: three-wire system, 2 voltage converters and 2 current converters, any load

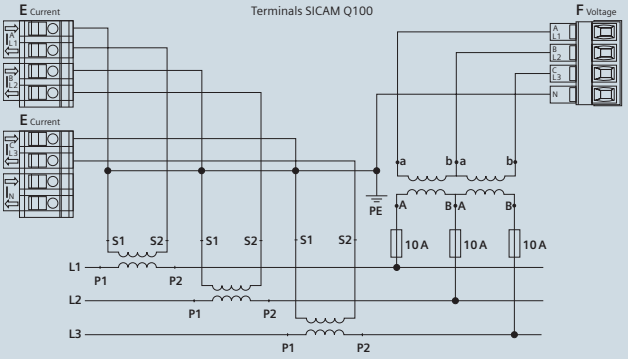

Fig. 4/95 Connection example: three-wire system, 2 voltage converters and 3 current converters, any load

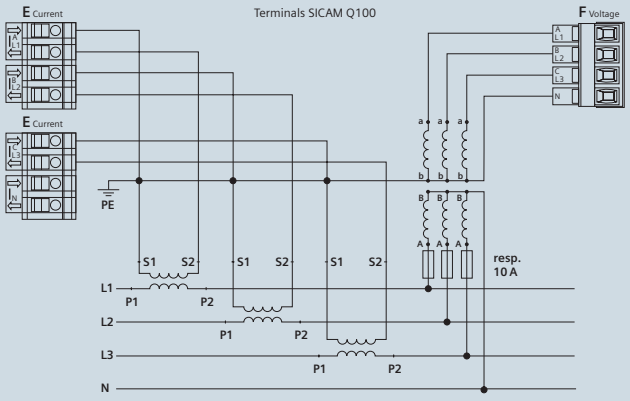

Fig. 4/96 Connection example: four-wire system, 3 voltage converters and 3 current converters, any load

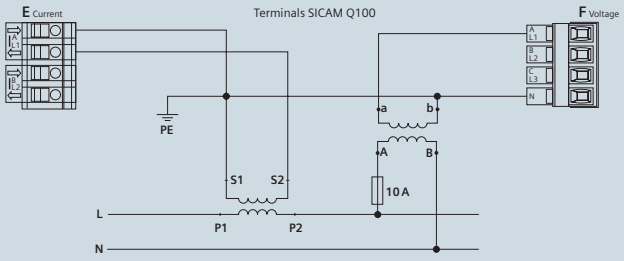

Fig. 4/99 Connection example: single-phase system, 1 voltage converter and 1 current converter, equal load

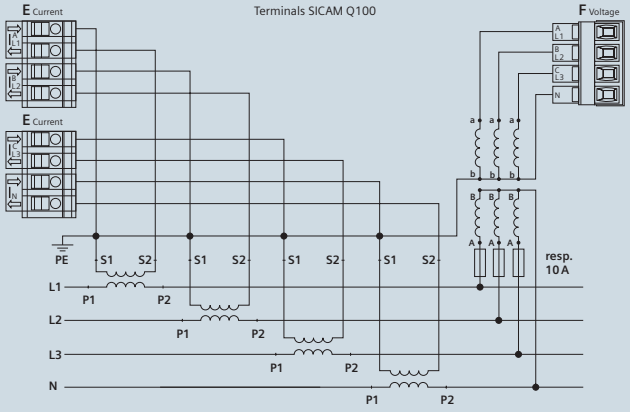

Fig. 4/97 Connection example: four-wire system, 3 voltage converters and 3 current converters, any load, 1 current converter connected to neutral conductor

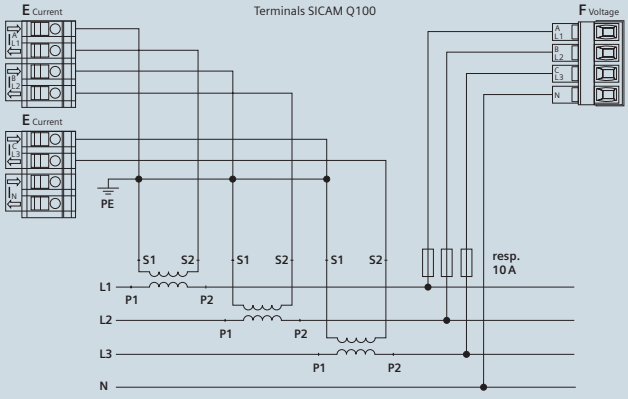

Fig. 4/100 Connection example: four-wire system, no voltage converter and 3 current converters, any load

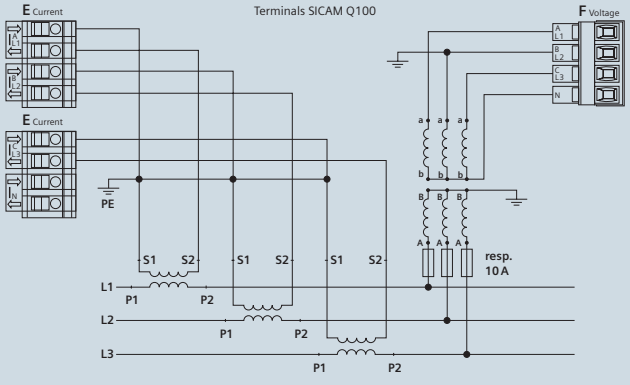

Fig. 4/98 Special circuit: Connection example: three-wire system, 3 voltage converters and 3 current converters, any load

4

Variants and dimensions

Device variants
SICAM Q100 is available in the following variants.
1. With standard Ethernet interface
- Modbus TCP protocol
- Optional IEC 61850 Server protocol

2. With optional RS485 interface:
- For Modbus RTU and Modbus RTU Master protocol and Gateway function

Housing
- Panel flush-mounted device with full graphical display
- Front protection class IP40

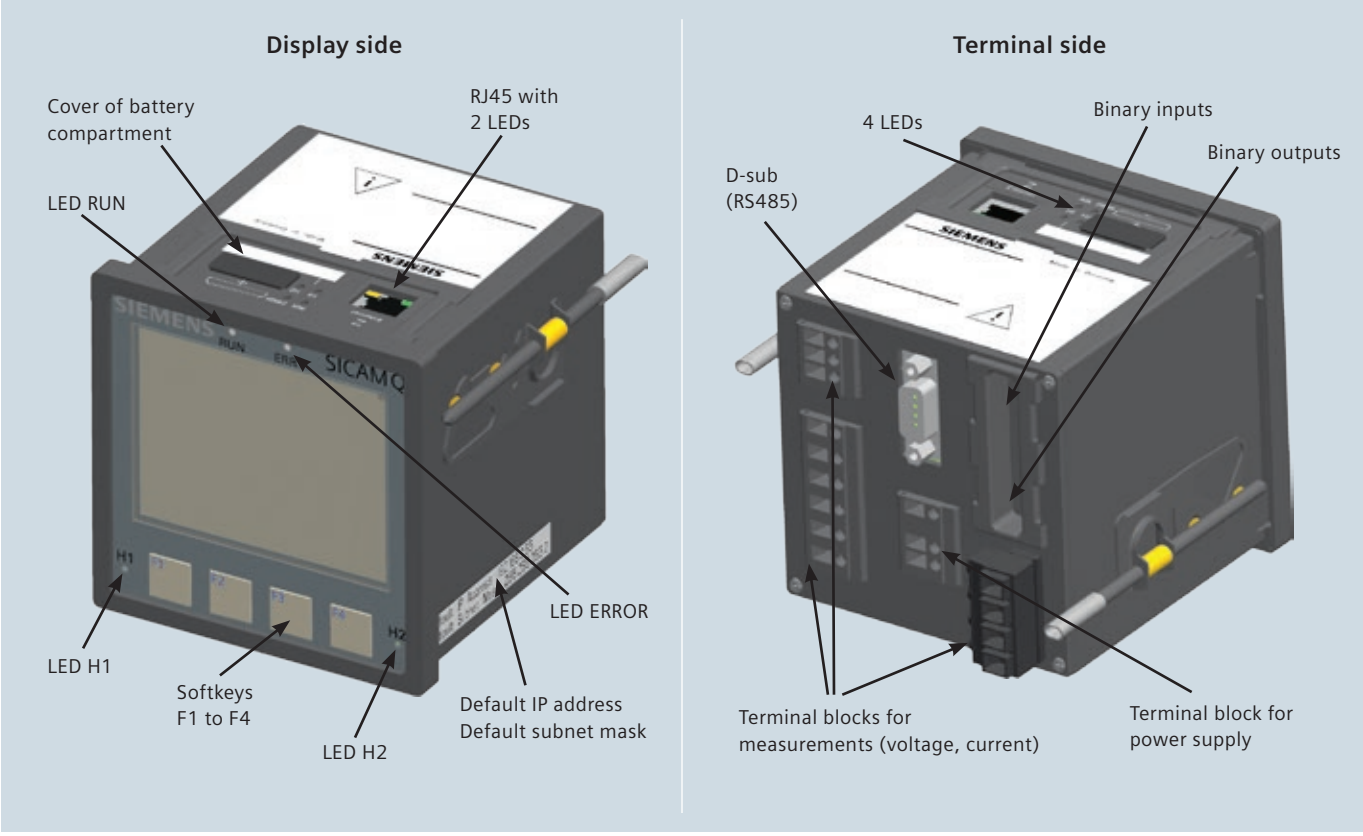

Fig. 4/101 Housing

Dimensions

- Weight 0.55 kg
- Dimensions (W x H x D) 95,5 mm x 96 mm x 102,9 mm
- 3.78" x 3.78" x 4.06"

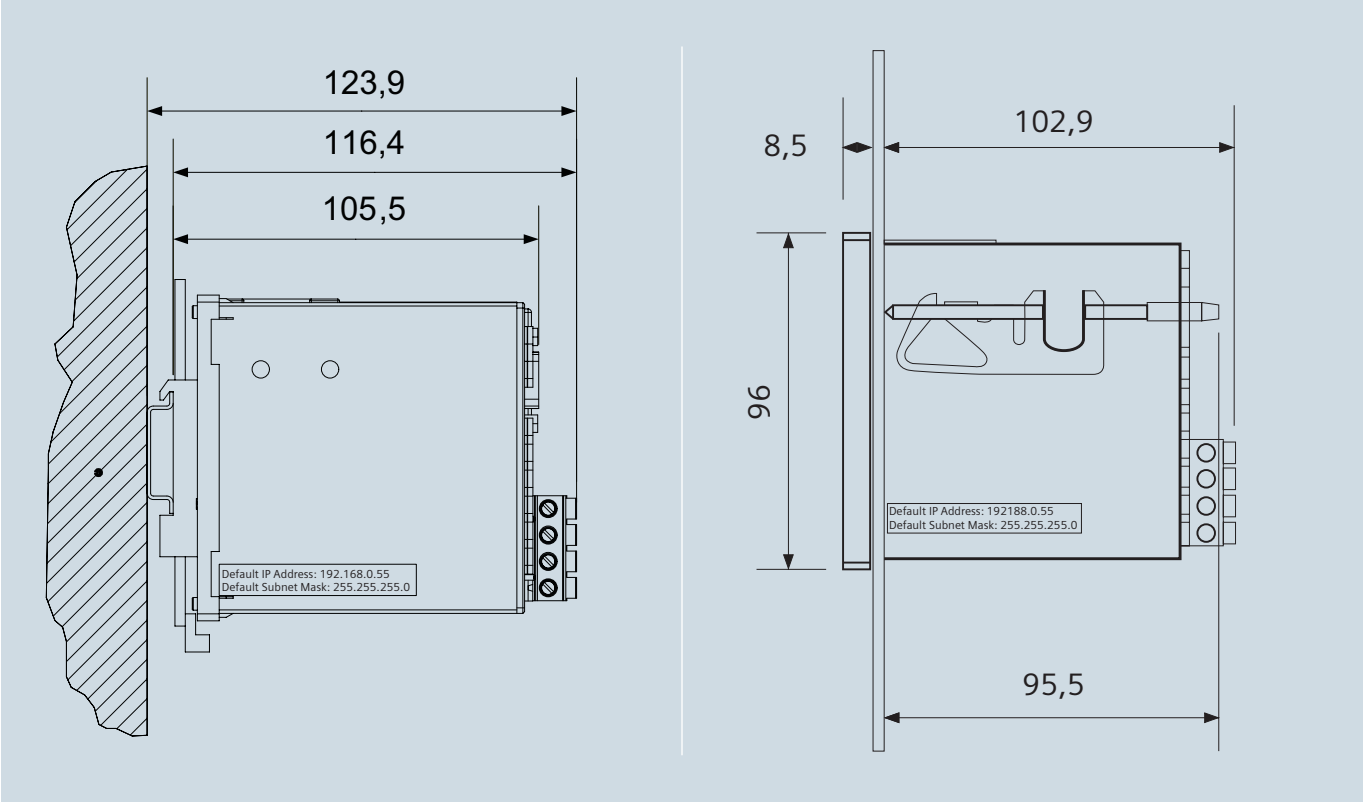

Fig. 4/102 Dimensions

Technical data

Supply voltage

Direct voltage	
Rated input voltage	24 V to 250 V
Admissible input voltage tolerance	± 20%
Admissible ripple of the input voltage	15%
Maximum inrush current	
At ≤ 110 V	< 15 A
At 220 V to 300 V	≤ 22 A; after 250 µs: < 5 A
Maximum power consumption	6 W

Alternating voltage	
Rated input voltage	110 V to 230 V
Power frequency at AC	50 Hz / 60 Hz
Admissible input voltage tolerance	± 20%
Admissible harmonics	2 kHz
Maximum inrush current	
At ≤ 115 V	< 15 A
At 230 V	≤ 22 A; after 250 µs: < 5 A
Maximum power consumption	16 VA

Inputs and outputs

Inputs for alternating voltage measurements, connector block F – Cat. III	
Rated input AC voltage range	
Phase–N/PE	AC 57.73 V to 400 V (autorange) – IEC 61000-4-30 Class A: up to AC 230 V: 200% overvoltage –> AC 230 V to 400 V: 200% up to 15% overvoltage UL conditions: – up to AC 170 V: 200% overvoltage –> AC 170 V to 300 V: 200% up to 15% overvoltage
Phase–phase	AC 100 V to 690 V (autorange) – IEC 61000-4-30 Class A: up to AC 400 V: 200% overvoltage –> AC 400 V to 690 V: 200% up to 15% overvoltage UL conditions: – up to AC 290 V: 200% overvoltage –> AC 290 V to 520 V: 200% up to 15% overvoltage
Maximum input AC voltage	
Phase–N/PE	460 V (347 V for UL)
Phase–phase	796 V (600 V for UL)
Input impedances	
L1, L2, L3 to N	3.0 MΩ
L12, L23, L31	3.0 MΩ
Additional information about voltage measurement inputs	
Power consumption per input for U_{max} 460 V	70 mW
Admissible frequency	42.5 Hz to 69.0 Hz
Measuring error due to environmental factors: see technical data	Acc. IEC 61000-4-30 Ed. 2 Class A (0.1%)
Sampling rate	10.24 kHz

Inputs for alternating current measurements, connector block E – Cat III	
Input alternating currents	
Rated input alternating current range	AC 1 A to 5 A (autorange)
Maximum input alternating current	AC 10 A
Power consumption per input	
At 5 A	2.5 mVA
Additional information about current measurement inputs	
Max. rated input voltage	150 V
Measuring error due to environmental factors: see technical data	Acc. to IEC 61000-4-30 Ed. 2 Class A (0.1 %)
Thermal stability	10 A continuous 100 A for max. 1 s
Sampling rate	10.24 kHz

Binary inputs, connector block U – Cat III	
Max. input voltage	DC 300 V
Static input current	1.34 mA ± 20 %
$U_{IL\ min}$ (at threshold voltage of 19 V)	DC 14 V
$U_{IL\ max}$ (at threshold voltage of 19 V)	DC 19 V
$U_{IL\ min}$ (at threshold voltage of 88 V)	DC 66 V
$U_{IL\ max}$ (at threshold voltage of 88 V)	DC 88 V
$U_{IL\ min}$ (at threshold voltage of 176 V)	DC 132 V
$U_{IL\ max}$ (at threshold voltage of 176 V)	DC 176 V
Runtime delay, low to high	2.8 ms ± 0.3 ms

Binary outputs, connector block G – Cat III	
Maximum contact voltage	
Alternating voltage	230 V
Direct voltage	250 V
Maximum currents	
Maximum continuous contact current	100 mA
Maximum pulse current for 0.1 s	300 mA
Additional information about binary outputs	
Internal resistance	50 Ω
Admissible switching frequency	10 Hz

Communication interfaces

Ethernet (connector Z)	
Ethernet, electrical	
Connection	Device top side RJ45 connector socket 10/100 Base-T acc. to IEEE 802.3 LED yellow: 100 Mbit/s (off/on) LED green: – flashing: active – on: not active – off: no connection
Protocols	Modbus TCP IEC 61850 Server
Voltage immunity	DC 700 V, AC 1500 V
Transmission rate	100 MBit/s
Cable for 10/100 Base-T	100 Ω to 150 Ω STP, CAT5
Maximum cable length 10/100 Base-T	100 m if well installed

Serial interface (connector J)	
RS485	
Connection	Terminal side, 9-pin D-sub socket
Protocol	Modbus RTU Master and Gateway functions
Baud rate (adjustable)	Min. 1200 Bit/s Max. 115 200 Bit/s
Maximum transmission distance	Max. 1 km (depending on transmission rate)
Transmission level	Low: -5 V to -1.5 V High: +1.5 V to +5 V
Reception level	Low: ≤ -0.2 V High: ≥ +0.2 V
Bus termination	Not integrated, bus termination using plugs with integrated terminal resistors (see Fig. 13-1)

Technical data

Environmental conditions	
Temperature data	
Operating temperature Devices with display: Legibility of the display is impaired at temperatures < 0 °C (+32 °F).	-25 °C to +55 °C -13 °F to +131 °F
Temperature during transport	-40 °C to +70 °C -40 °F to +158 °F
Temperature during storage	-40 °C to +70 °C -40 °F to +158 °F
Maximum temperature gradient	20 K/h
Air humidity data	
Mean relative air humidity per year	≤ 75 %
Maximum relative air humidity	95 % 30 days a year
Condensation during operation	Not permitted
Condensation during transport and storage	Permitted
Altitude and installation location	
Maximum altitude above sea level	2000 m
Installation location	Indoor installation only

Climatic stress tests
Standards: IEC 60068
Dry cold: IEC 60068-2-1 test Ad
Dry cold during operation, storage, and transport: IEC 60068-2-2 test Bd
Damp heat: IEC 60068-2-78 test Ca
Temperature change: IEC 60068-2-14 tests Na and Nb

General data

Battery	
Type	PANASONIC CR2032 or VARTA 6032 101 501
Voltage	3 V
Capacity	230 mAh
Typical service life	Operated with permanently applied supply voltage: 10 years
	Operated with sporadically interrupted supply voltage: total of 2 months over a 10-year period

Internal memory	
Capacity	2 GB
Housing (without front plate or terminals)	IP20
Panel flush mounting (front)	IP40
Terminals	IP20

Test data

Reference conditions according to IEC 62586-1 for determining test data	
Ambient temperature	23 °C ± 2 °C
Relative humidity	40 % to 60 % RH
Supply voltage	U_{HN} ± 1 %
Phases (3-wire system)	3
External continuous magnetic fields	DC field: ≤ 40 A/m
	AC field: ≤ 3 A/m
DC components U/I	None
Signal waveform	None
Frequency	50 Hz ± 0.5 Hz
	60 Hz ± 0.5 Hz
Voltage magnitude	U_{din} ± 1 %
Flicker	P_{st} < 0.1 %
Unbalance (all channels)	100 % ± 0.5 % of U_{din}
Harmonics	0 % to 3 % of U_{din}
Interharmonics	0 % to 0.5 % of U_{din}

Electrical tests

Standards	
Standards	IEC EN 61000-6-2 IEC EN 61000-6-4 IEC EN 61010-1 IEC EN 61010-2-030

Insulation test according to IEC EN 61010-1 and IEC EN 61010-2-030				
Inputs/outputs	**Insulation**	**Rated voltage**	**ISO test voltage**	**Category**
Current measuring inputs	Reinforced	150 V	AC 2.3 kV	Cat. III
Voltage measuring inputs	Reinforced	600 V	Surge voltage 9.76 kV	Cat. III
		300 V		Cat. IV
Supply voltage	Reinforced	300 V	DC 3.125 kV	Cat. III
Binary outputs	Reinforced	300 V	AC 3.51 kV	Cat. III
Binary inputs	Reinforced	300 V	AC 3.51 kV	Cat. III
Ethernet interface	SELV	< 24 V	AC 1500 V	–
RS485 interface	SELV	< 24 V	DC 700 V	–

EMC tests for immunity (type tests)	
Standards	IEC EN 61000-6-2 For more standards, also see individual tests
Electrostatic discharge, Class III, IEC 61000-4-2	6 kV contact discharge; 8 kV air discharge; Both polarities; 150 pF; Ri = 330 Ω with connected Ethernet cable
HF electromagnetic field, amplitude-modulated, Class III IEC 61000-4-3	10 V/m; 80 MHz to 3 GHz; 80 % AM; 1 kHz
Fast transient disturbance variables/ bursts, Class III IEC 61000-4-4	2 kV; 5 ns/50 ns; 5 kHz; Burst length = 15 ms; Repetition rate 300 ms; Both polarities; R_i = 50 Ω; Test duration 1 min
High-energy surge voltages (SURGE), Installation Class III IEC 61000-4-5	Impulse: 1.2 µs/50 µs
Auxiliary voltage	Common mode: 2 kV; 12 Ω; 9 µF Diff. mode:1 kV; 2 Ω; 18 µF
Measuring inputs, binary inputs, and relay outputs	Common mode: 2 kV; 42 Ω; 0.5 µF Diff. mode: 1 kV; 42 Ω; 0.5 µF
HF on lines, amplitude-modulated, Class III IEC 61000-4-6	10 V; 150 kHz to 80 MHz; 80 % AM; 1 kHz
Power system frequency magnetic field IEC 61000-4-8, Class IV	30 A/m continuous; 300 A/m for 3 s
1 MHz test, Class III, IEC 61000-4-18	2.5 kV (peak); 1 MHz; τ = 15 µs; 400 surges per s; Test duration 1 min; R_i = 200 Ω

EMC tests for emitted interference (type test)	
Standard	IEC EN 61000-6-4
Radio noise voltage to lines, auxiliary voltage only IEC-CISPR 22	150 kHz to 30 MHz Limit Class A
Interference field strength IEC-CISPR 22	30 MHz to 1000 MHz Limit Class A

Mechanical tests

Vibration and shock stress in stationary use	
Standards	IEC 60068
Oscillation IEC 60068-2-6 test Fc	Sinusoidal 10 Hz to 60 Hz: ±0.075 mm amplitude; 60 Hz to 150 Hz: 1 g acceleration Frequency sweep rate 1 octave/min 20 cycles in 3 orthogonal axes
Shock IEC 60068-2-27 test Ea	Semi-sinusoidal 5 g acceleration, duration 11 ms, 3 shocks each in both directions of the 3 axes
Seismic vibration IEC 60068-3-3 test Fc	Sinusoidal 1 Hz to 8 Hz: ±7.5 mm amplitude (horizontal axis) 1 Hz to 8 Hz: ±3.5 mm amplitude (vertical axis) 8 Hz to 35 Hz: 2 g acceleration (horizontal axis) 8 Hz to 35 Hz: 1 g acceleration (vertical axis) Frequency sweep rate 1 octave/min 1 cycle in 3 orthogonal axes

Vibration and shock stress in transport	
Standards	IEC 60068
Oscillation IEC 60068-2-6 test Fc	Sinusoidal 5 Hz to 8 Hz: ±7.5 mm amplitude; 8 Hz to 150 Hz: 2 g acceleration Frequency sweep 1 octave/min 20 cycles in 3 orthogonal axis
Shock IEC 60068-2-27 test Ea	Semi-sinusoidal 15 g acceleration, duration 11 ms, 3 shocks each (in both directions of the 3 axes)
Continuous shock IEC 60068-2-29 test Eb	Semi-sinusoidal 10 g acceleration, duration 16 ms, 1000 shocks each (in both directions of the 3 axes)
Free fall IEC 60068-2-32 test Ed	0.5 m

Safety standards
IEC EN 61010: IEC EN 61010-1, IEC EN 61010-2-30

Weight and dimensions	
Weight	Approx. 0.55 kg
Dimensions (W x H x D)	95,5 mm x 96 mm x 102,9 mm 3.78" x 3.78" x 4.06"

Technical data, selection and ordering data

Description	Order No. / MLFB
Power Monitoring Device and Power Quality Recorder, Class A	
SICAM Q100 – CE approval and UL approval	**7KG9501-0AA□1-□AA1**
Device type	
Dimensions 95,5 mm x 96 mm x 102,9 mm Panel flush-mounted device with graphical display 4 inputs for AC voltage measurements 4 inputs for AC current measurements 2 binary inputs 2 binary outputs Web server for parameterization, visualization, and data management Ethernet switch 2-GB internal memory	
Measurements, monitoring, PQ recordings, and power management functions	
Measurements according to IEC 61000-4-30, Class A Measurements: U, I, f, P (Class 0.2S), Q, S, W, cos phi, flicker Fault data storage with transient detection and event recording Logging of power quality, e.g. according to EN 50160 ANSI C12.20, Class 2 and Class 10 Online visualization Recording of mean and min/max values Measurements up to 63rd harmonics order (current, voltage) Limit value violations Power management: Load profile and tariffs (TOU)	
Serial interface and communication protocol	
without	**0**
RS485 – Modbus RTU Slave, and Modbus RTU Master and Gateway functions	**3**
Front protection class	
IP40	
Ethernet interface and communication protocol, RJ45	
Modbus TCP	**0**
Modbus TCP and IEC 61850 server	**2**

Table 4/39 Selection and ordering data

SIEMENS



Power Quality devices for all applications

SIPROTEC 5 – Fault Recorder 7KE85

siemens.com/powerquality

Fault Recorder 7KE85

You´ll find information about the Fault Recorder SIPROTEC 7KE85 in the SIPROTEC 5 catalog or under
www.siemens.com/protection
www.siemens.com/powerquality

5

SIEMENS



Power Quality devices for all applications

SICAM PQS Fault Record and Power Quality Analysis System

siemens.com/powerquality

Contents – SICAM PQS

	Page
Description and function overview	6/3
Applications	6/3
SICAM PQ Analyzer collector	6/9
Architecture and Configuration	6/9
Selection and ordering data	6/10

Description

Siemens SICAM PQS allows all fault records and power quality data to be analyzed in one system.

The protection of power distribution equipment is crucial in assuring a reliable power supply. Customers expect maximum availability of electrical power, reflecting a consistently high standard of quality. For example, in power system protection, it is becoming increasingly difficult to distinguish between critical load cases and short circuits with minimal fault currents. The demands on optimum use and the corresponding parameterization of protective devices are rising. Intensive evaluation of available information from secondary equipment (using fault recorders) is therefore essential. Only this way can today's high levels of reliability and availability in power transmission and distribution networks be ensured for the future as well. There is also concern that the growing use of power electronics often has a noticeable impact on voltage quality. The resulting inadequate voltage quality leads to interruptions, production losses and high consequential costs. Compliance with the generally valid quality criteria for power supply systems as defined in the European standard EN 50160 is therefore vital. The basis must be reliable recording and assessment of all quality parameters. Weak spots and potential fault sources can be identified early on and systematically eliminated. With the software solution SICAM PQS, Siemens is setting new benchmarks here: For the first time, it is now possible with an integrated software solution to evaluate and archive centrally and vendor-neutral all power quality data from the field. This gives you a quick and uncomplicated overview of the quality of your system. With SICAM PQS, you can keep an eye on all relevant data, including fault records as well as all power quality measurement data. SICAM PQS can also be easily expanded to create a station control system for combined applications.

Benefit

- Secured voltage quality for the supply of your station
- Fast, transparent analysis of the cause and development of a network fault
- Efficient deployment of troubleshooting personnel
- User-friendliness
- Evidence of compliance with normalized standards in utilities
- Online comparison of captured PQ data with standard-specific and customer-specific grid code templates
- Immediate notification of power quality criteria violations
- Automatic determining of the fault location
- Automatic analysis and reporting of power quality criteria violations
- Structured representation and structured access to archived data
- Cumulative summary of all PQ data to a state criterion (PQ index)
- Spatially distributed options for the monitoring and evaluation of PQ measuring data
- Archiving of PQ data (measured values, fault records, PDR records)
- Different communication standards and interfaces for device connection and for detection of process data (Ethernet TCP / IP, serial interfaces)
- Automatic import of third-party devices in PQDIF and COMTRADE format
- Ethernet network monitoring, e.g. based on SNMP
- Data exchange via OPC for the connection to office desktop computers
- Secured data access via a user administration tool
- Redundant structure of the system on different levels
- Test and diagnostic functions.

Function overview

- Central PQ archive for:
  - Fault records
  - PQ data
  - Reports
- Variety of protocols
  - IEC 61850
  - IEC 60870-5-103
  - SIMEAS R Master
  - SICAM Q80 Master
- Third-party devices connected via COMTRADE / PQDIF import
- Single or double-end fault locator with option of double or parallel line compensation
- Grid code evaluation: Online evaluation of recorded PQ data with limits of grid code templates:
  - Standards: EN 50160 MV, EN 50160 LV, IEC 61000
  - User-defined
- Automatic generation of daily, weekly, monthly or yearly PQ reports accurately describing the network quality
- Server / client structure for centralized and flexible evaluation.

Applications

The following is an overview of the individual components and their tasks.

SICAM PQS UI – Configuration

The system component SICAM PQS UI – Configuration supports you in the following tasks:

- Configuration and parameterization of your station
- Exchange of configuration data.

In the different views, you can specify the type and the transmission modes of your communication links. Additionally, you can define which devices, substations, control centers or HMIs are connected. For each of the connected system components, you can specify what information is evaluated in SICAM PAS / PQS. Furthermore, you can define what information is available for communication with higher-level control centers and for system management via SICAM SCC (Station Control Center) or SICAM DIAMOND. You can individually structure your system data in a topological view to map your operating conditions, and also assign individual switching permissions. In this view, you can also define parameters for fault location calculation, e.g. the line data, double line, maximum load current or the starpoint position.

Applications

SICAM PQS UI – Configuration (cont.)
In addition, you select the measuring channels whose PQ measuring data must be used for the fault locator. In order to be able to evaluate the quality of PQ measuring data, so-called grid codes must be assigned to the individual topological levels. Predefined device-specific and project-specific templates, templates for scheduled reports and grid codes, along with import / export and copy functions, facilitate and accelerate the configuration and parameterization of your system.

Configuration
In this view (Fig. 5/1), you specify the components of your SICAM PQS system. These include:

- Systems
  - Full server
  - DIP
- Applications
  - IED protocols, e.g. IEC 61850, IEC 60870-5-103
  - SICAM Q80, SIMEAS R
  - PQS automatic import
  - Archive
  - PQS scheduled reports
  - PQS automatic fault location
  - PDR recorder
  - OPC
  - Network monitoring via SNMP
- Interfaces
  - Serial interfaces
  - Ethernet TCP / IP
  - Profibus
- Devices
  - PQ devices
  - Fault recorders
  - Protection devices.

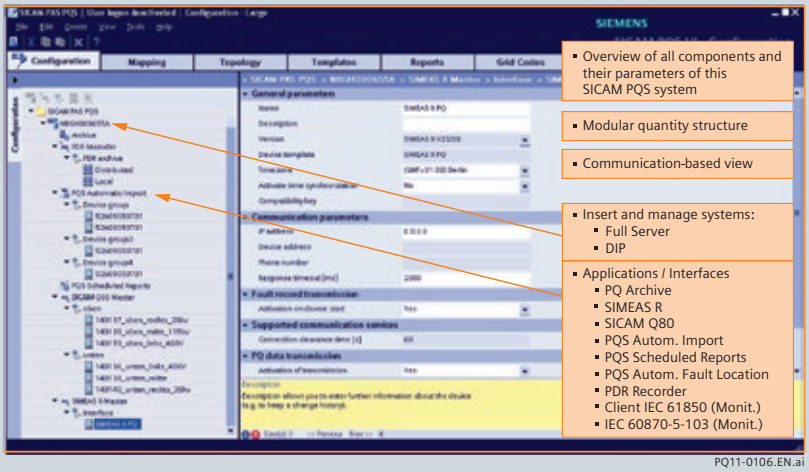

Fig. 5/1 SICAM PQS UI – Configuration – Configuration

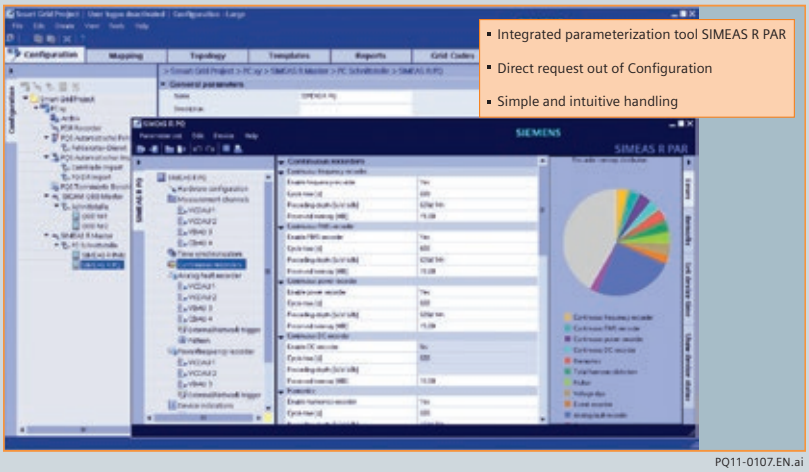

Fig. 5/2 SICAM PQS UI – Configuration – Configuration – R Par

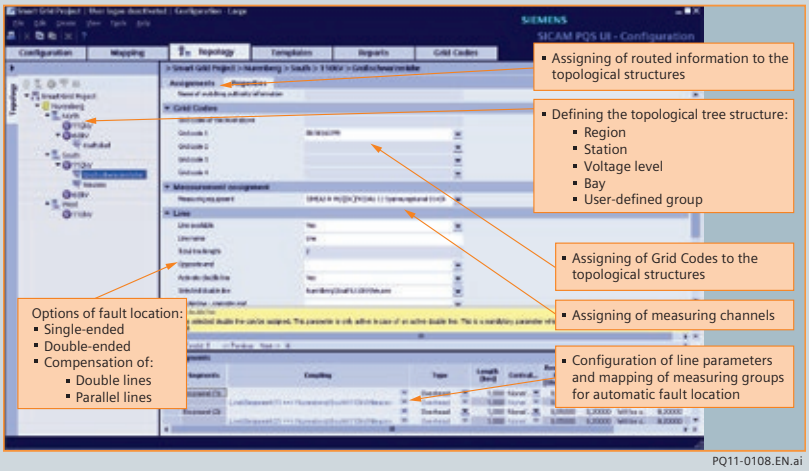

Fig. 5/3 SICAM PQS UI – Configuration – Topology

Configuration (cont.)
The configured components are represented in a tree structure; the parameters of the selected component are displayed in the input area. Additionally, a description of permissible setting options is displayed for the parameter currently selected. Erroneous inputs are marked and explained in an error field. The two parameterization tools for SIMEAS R and SICAM Q80 can also be opened directly from this view and the devices parameterized (Fig. 5/2).

Mapping
In the mapping view (Fig. 5/4), which is mainly for expansion into a substation automation system, all the status / process information for each device is mapped in the monitoring and command directions, for forwarding to the control center / SICAM SCC (Station Control Center) or SICAM Soft PLC.

Topology
The Configuration view focuses on your station's communication requirements, but you can create a system view focusing on the primary technological topology in the Topology view (Fig. 5/3). The topological structure consists of different levels, including the region, station, voltage level, bay and user-defined groups. You assign these structure levels to the corresponding items of information. You can also assign the measuring channels to the topological structure here, for subsequent more targeted analysis of the PQ measured data (via the topology) in the PQ Analyzer. And you can assign one or more grid codes to the individual structure levels in order to validate the PQ measured data and define your power system.
In this view, you also parameterize the line data for fault location. For the PQS Automatic Fault Location function, you assign the measuring groups to those devices whose measuring data is used for calculating the fault location. The measuring groups specify e.g. the assignment of the measuring channels and phases of the fault records used.

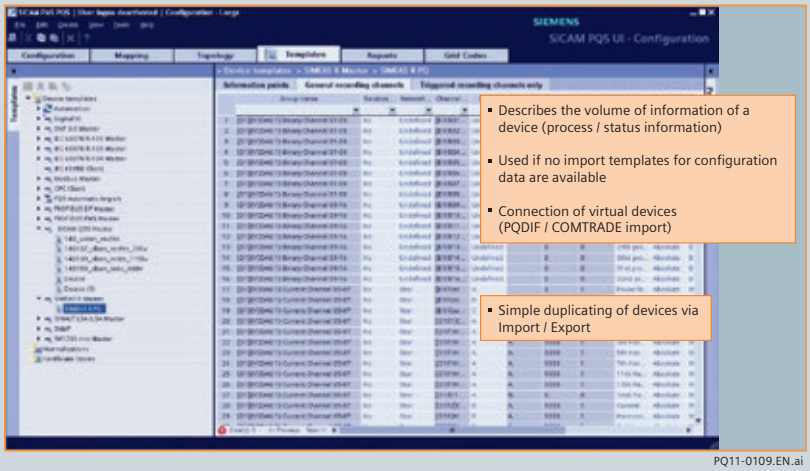

Fig. 5/4 SICAM PQS UI – Configuration – Templates

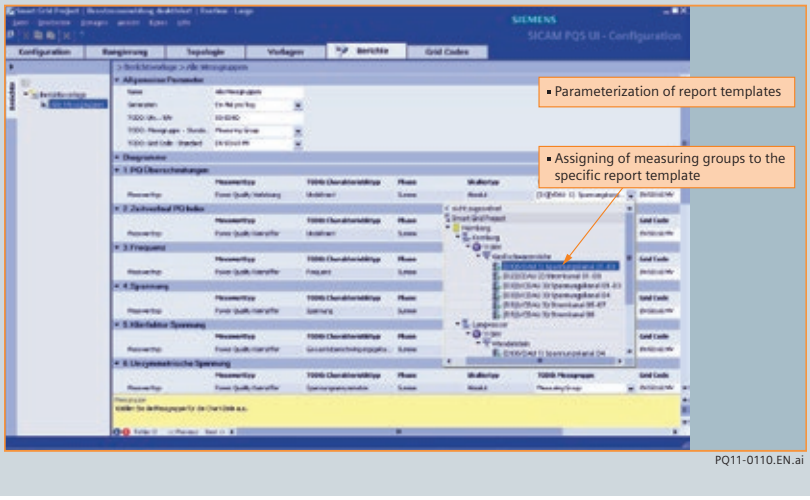

Fig. 5/5 SICAM PQS UI – Configuration – Reports

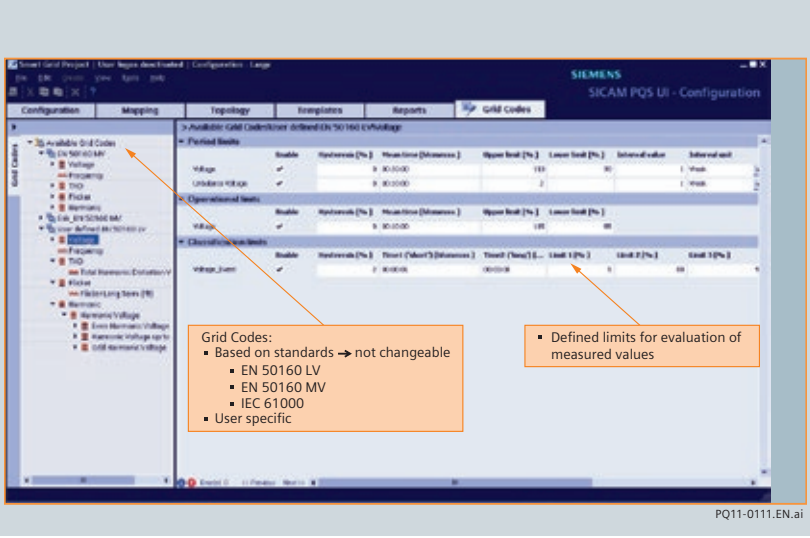

Fig. 5/6 SICAM PQS UI – Configuration – Grid Codes

Applications

Templates

In this view (Fig. 5/4), you can also define the measuring groups and recording channels for import of PQDIF and COMTRADE data from the virtual devices. Virtual devices are used for the connection of third-party devices which do not communicate via a protocol supported by SICAM PQS.

Reports

In the Reports view (Fig. 5/5), you insert the templates for scheduled reports. The reports contain measured data for determining the power quality. Their content is freely configurable. For each template, you can define when the report is to be created (for example daily, weekly, monthly or yearly).

You can also insert various diagrams of measured and evaluated PQ data, and assign the measuring groups and grid codes required for evaluation.

Grid Codes

In this view (Fig. 5/6), the grid codes are imported and adapted where necessary. The grid codes include standardized or customer-defined limit values for checking measured data.

The grid codes included in the scope of delivery and based on standards (e.g. EN 50160 LV, EN 50160 MV) cannot be modified. For grid codes which can be altered to meet customer-specific requirements, however, the scope of delivery includes a template which can be edited in this view. By monitoring compliance with these limits, SICAM PQS ensures a fast, compact overview of the power network quality.

SICAM PQS UI – Operation

SICAM PQS UI – Operation provides you with an overview of the runtime status of your station (Fig. 5/7). The configuration is displayed in tree structure. The different colors show the status of interfaces, devices or other applications.

SICAM PQS – Value Viewer

The SICAM PQS Value Viewer (Fig. 5/8) is an important tool for the project phases of configuration, testing, commissioning and operation. Without any additional configuration expenditure, it enables the visualization of process and system information, and informs you on the current status of your station.

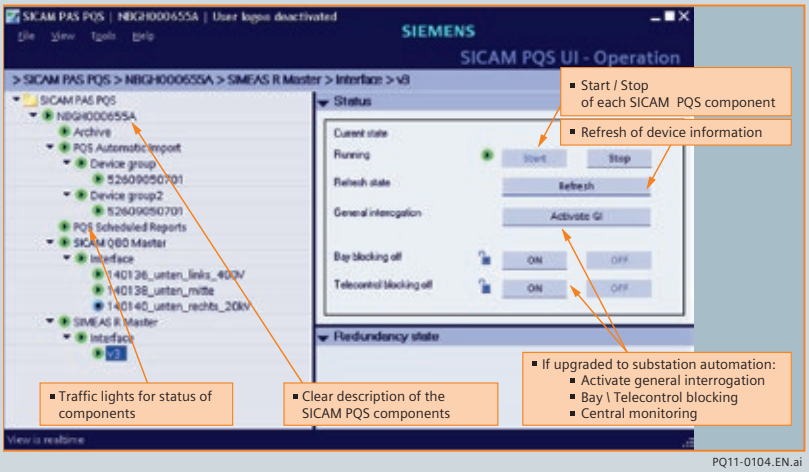

Fig. 5/7 SICAM PQS UI – Operation

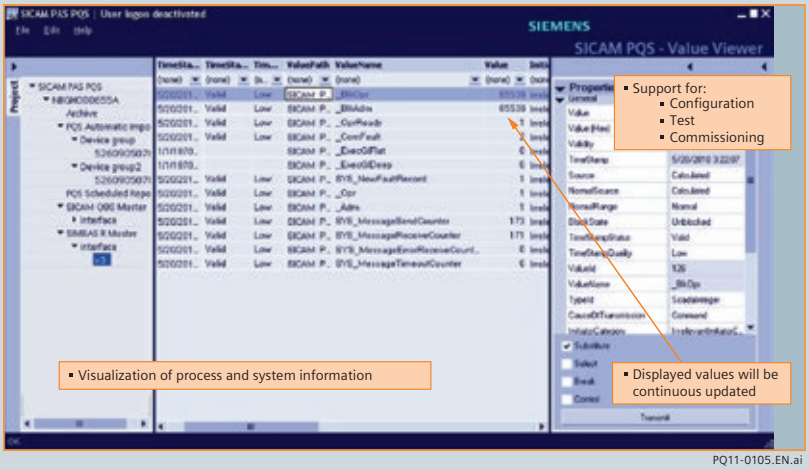

Fig. 5/8 SICAM PQS Value Viewer

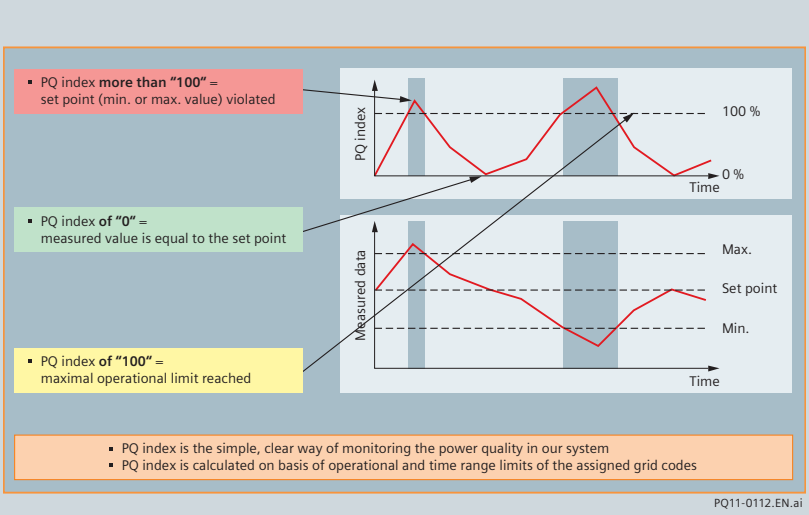

Fig. 5/9 PQ index for one characteristic

SICAM PQS – User Administration

Via a User Administration tool you can assign passwords in order to define which persons can access individual working areas and functions. Users can be assigned one of the following roles: Administrator / System Engineer / Data Engineer / Switch Operator / Guest User

SICAM PQS – Feature Enabler

Use the SICAM PQS Feature Enabler to enable SICAM PQS system components which you require in your project or on the corresponding computer.

SICAM PQ – Analyzer

The SICAM PQ Analyzer provides comprehensive evaluation options for archived PQ measuring data and fault records. In addition to clearly structured fault record analysis, the fault locator facilitates and accelerates the elimination of faults in the power network. PQ violation reports provide a quick and comprehensive overview of limit value violations. Scheduled reports provide an overview of the development of measuring data over selectable time ranges.

With the aid of a calendar tool available in all views, you can quickly and easily select any time range over which data is to be displayed in a diagram.

The calculated PQ index delivers concise information on the quality of your network (Fig. 5/9). The following various views of the SICAM PQ Analyzer provide the means for evaluation of PQ measuring data and system disturbances.

Incident Explorer (Fig. 5/10)

The Incident Explorer provides an overview of all faults stored in the archive. It enables time-related evaluation, and provides a topological and communication view of:

- Fault records
- Fault location reports
- PQ violation reports
- PDR records.

The topological structure of the archive data corresponds to the structure which you defined when configuring the SICAM PQS station.

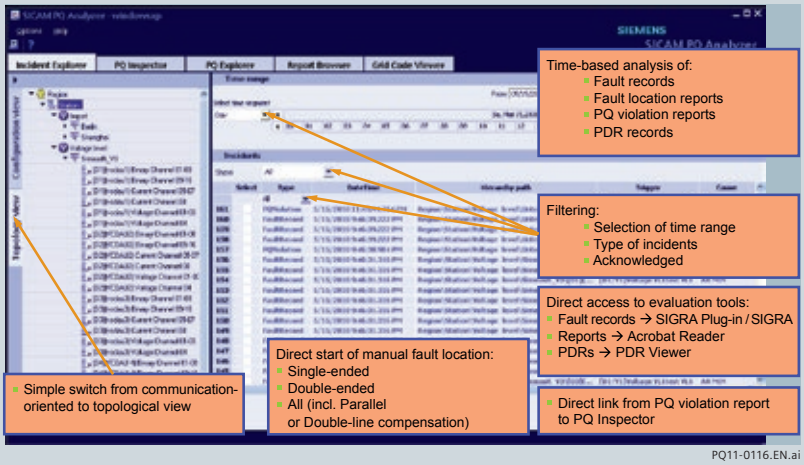

Fig. 5/10 SICAM PQ Incident Explorer

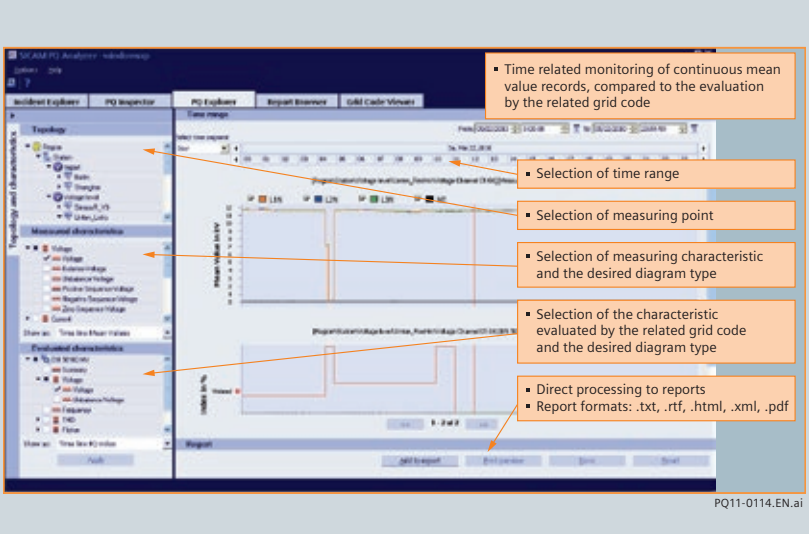

Fig. 5/11 SICAM PQ Analyzer: PQ-Explorer

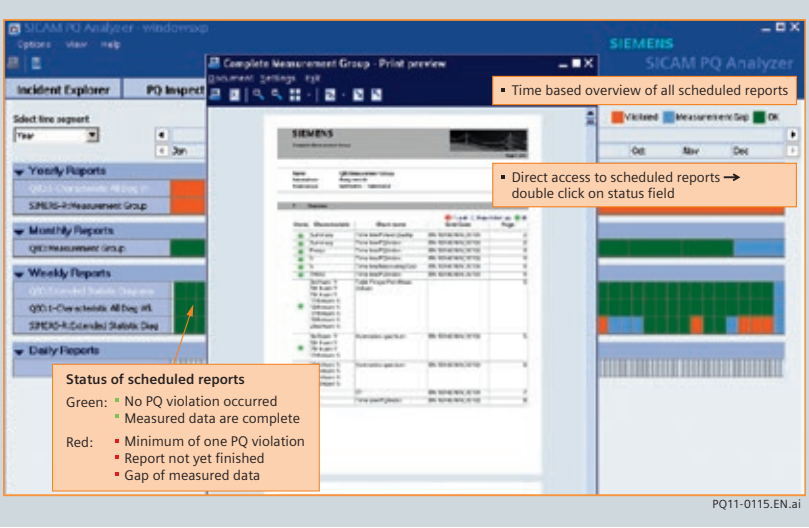

Fig. 5/12 SICAM PQ Analyzer: Report Browser

Applications

Incident Explorer (cont.)

The Incident Explorer serves for the following tasks:
- Reading the events (confirm)
- Calling up the evaluation programs
- Deleting the events from the archive overview

Various filter options are available for the selection of events in the power network
- Selecting the time range from the archive.

PQ Inspector

The PQ Inspector provides the operator with a quick overview of the station's power network quality based on the PQ index. Archived data is analyzed over freely selectable time ranges, and the operator can immediately detect the causes for discrepancies between measured values and grid codes. The PQ Inspector is subdivided into the following 3 views:
- Select time range
  Definition of the period under observation and identification of influencing factors for deviations from the specifications via a stoplight model of the self-defined measurements / characteristics groups
- Select diagrams
  Selection of the characteristics of a measuring point and definition of the diagram for data representation
- Finalize report
  Finalization of the report. These views assist you in the step-by-step creation of a manual report.

PQ Explorer

The PQ Explorer (Fig. 5/11) provides access to all PQ data stored in the archive. It provides a topological view of the measuring points in your station. Measured and calculated PQ data is evaluated via PQ diagrams. The following diagram types are supported in the process (see table 5/1).

Report Browser

The Report browser (Fig. 5/12) provides an overview of those scheduled reports and their status, which are created automatically at specified time intervals (daily, weekly, monthly or yearly). Any desired report can simply be selected for opening and subsequent printing.

Grid code Viewer

The grid code viewer provides the overview required for a supporting analysis:
- Which grid codes are available?
- To which elements in the topology have the grid codes been assigned?
- What characteristics do the grid codes contain?
- What limits have been defined?

General data

Table / diagram type	Typical use
Properties	– Overview of the grid codes that are assigned to a PQ device – Overview of the PQ devices assigned to a particular node in the topology

Tables and diagrams for measured characteristics

Table / diagram type	Typical use
Time characteristic minimum values, maximum values, average values	– Overview of the progress of a measured characteristic
Table minimum values, maximum values, average values	– Display of the values of a characteristic transferred by a PQ device
Bar graph P95 / min / average / max	– Fast detection of static outliers over a long period – Suitable for monthly reports
Fingerprint diagram	– Overview of static distribution of measured harmonic overvoltages of different orders
Fingerprint table	– View of the data that are used to create fingerprint diagrams
Harmonics spectrum	– Comparison of harmonic overvoltages of different orders

Tables and diagrams for evaluated characteristics

Table / diagram type	Typical use
Fingerprint diagram	– Overview of the static distribution of the PQ index from several characteristics
Fingerprint table	– View of the data that are used to create fingerprint diagrams
Harmonics spectrum	– Comparison of the PQ index of different orders
Time characteristic PQ index	– Quick overview of the PQ index over a long period
Time characteristic power quality	– Title page of a monthly report (PQ violations are immediately recognizable)
Time characteristic measurement gaps	– Title page of monthly report (measurement gaps are immediately detectable)
Bar graph PQ statistics	– Comparison or the PQ index of several characteristics over longer period

Diagram for measured events

Table / diagram type	Typical use
Time characteristic event values	– Overview of measured events that have occurred

Table and diagram of evaluated events

Table / diagram type	Typical use
Time characteristic event values	– Overview of events that have occurred
ITI (CBEMA)	– Overview of voltage rises, voltage dips and voltage interruptions acc. to ITI / CBEMA requirements
ESKOM	– Overview of voltage dips and voltage interruptions acc. to EKOM requirements
Voltage event list	– Overview of voltage-specific events

Table 5/1 Diagram types

SICAM PQ Analyzer collector, architecture and configuration

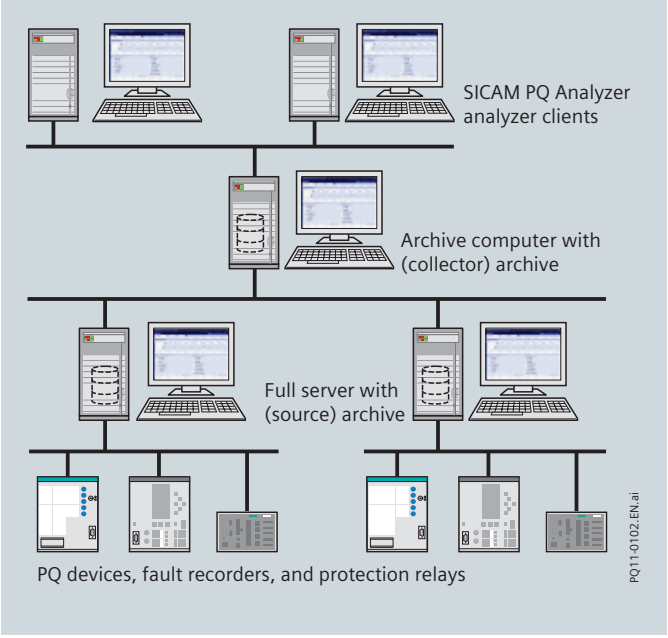

Fig. 5/13 Architecture

SICAM PQ Analyzer collector

The SICAM PQ Analyzer collector gathers the archive data from the individual (source) archives together in a central (collector) archive. Depending on the system configuration, the SICAM PQ analyzer accesses the data of the (source) archives or (collector) archives for archive evaluation.
The example illustrates the configuration with

- Full server with (source) archive
- Archive computer with (collector) archive and licenses for the SICAM PQ Analyzer and collector
- 1 to 5 SICAM PQ Analyzer clients.

In redundant archive systems, the two SICAM PQ collectors are connected. In order to accelerate the determining of archive data, the data stored in the two archives is initially compared. The data from that partner archive is integrated which has already received this data from the connected devices. Afterwards, the SICAM PQ collector retrieves data from the connected devices, and only transfers data from those devices for which no data has been received via the partner computer.

Architecture

Thanks to its modular system structure, SICAM PQS is suitable for multiple use in power supply utilities or industrial facilities. SICAM PQS can be set up in many variants:

- Full server with (source) archive and SICAM PQ Analyzer
- System with
  – Full servers with (source) archive
  – SICAM PQ Analyzer clients
- System with
  – Full servers
  – Archive computers with (collector) archive
  – SICAM PQ Analyzer clients.

The number of components which can be used in a system depends on the individual license.

(Source) archive

The full server collects PQ measuring data and fault records from connected devices and stores them in its local (source) archive. This archive data can be directly evaluated by one or more SICAM PQ Analyzers.

(Collector) archive

In distributed systems with one or more full servers, the data of the (source) archives is collected by the SICAM PQ Analyzer collector and stored in a central (collector) archive on an archive computer. This archive data is evaluated by one or more SICAM PQ Analyzer(s).

Configuration

Operating systems

The following operating systems are supported:

- Windows XP Professional SP3 (32-bit)
- Windows Server 2003 R2 Standard SP2 (32-bit)
- Windows 7 Professional SP1 (32-bit or 64-bit)
  – only in Windows-classic design
- Windows Server 2008 Standard SP2 (32-bit) without Hyper-V – only in Windows-classic design
- Windows Server 2008 R2 Standard SP1 (64-bit)
  – only in Windows-classic design
- Windows Embedded Standard
  (SICAM Station Unit V2.20, 32-bit).

Hardware requirements

Computer with

- Processor
  – At least Intel Pentium Celeron 1.86 GHz
  – Recommended for SICAM PQS Intel Core Duo 2 GHz
  – Engineering for large installations Intel Core 2 Duo 3 GHz
- RAM size
  – At least 2 GB
  – Recommended for SICAM PQS 4 GB
  – Engineering of large installations 4 GB
- Hard disk capacity
  – At least 2 GB not including archive size
- Graphics card:
  – At least SVGA (16 MB), 1024 × 768
  – Recommended SXGA (32 MB), 1280 × 1024
- Monitor matching graphics card
- DVD drive
- Keyboard
- Mouse
- USB port for dongle
- Network interface.

Note:
Computers with multi-core processors are supported. Computers with multi-processor main boards are only supported in single-processor operation.

Products – SICAM PQS

Selection and ordering data

Description	Order No.	Precondition
SICAM PQS V8.0 Bundles Base package plus one application. Base packages & Bundles will be delivered with USB dongles (MLFB position 8 = "1")		
Supporting up to 4 devices		
SICAM PQS (SICAM Q80)	**7KE9000-1RA10-8BA0**	
SICAM PQS (SIMEAS R)	**7KE9000-1RA10-8CA0**	
SICAM PQS (IEC 61850 (monitoring direction))	**7KE9000-1RA10-8DA0**	
Supporting up to 15 devices		
SICAM PQS (SICAM Q80)	**7KE9000-1MA10-8BA0**	
SICAM PQS (SIMEAS R)	**7KE9000-1MA10-8CA0**	
SICAM PQS (IEC 61850 (monitoring direction))	**7KE9000-1MA10-8DA0**	
Supporting more than 15 devices		
SICAM PQS (SICAM Q80)	**7KE9000-1AA10-8BA0**	
SICAM PQS (SIMEAS R)	**7KE9000-1AA10-8CA0**	
SICAM PQS (IEC 61850 (monitoring direction))	**7KE9000-1AA10-8DA0**	
SICAM PQS V8.0 upgrades		
Functional upgrades with respect to number of supported devices		
"Full Server" (Runtime) (up to 15 devices)	**6MD9004-0RA10-8AA0**	**7KE9000-1RA10-8*A0**
"Full Server" (Runtime) (more than 15 devices)	**6MD9004-0MA10-8AA0**	**7KE9000-1MA10-8*A0**
Version upgrade		
SICAM PAS / PQS Upgrade to V8.0x SPx (ordering the upgrade the first order must be referenced)	**6MD9003-0AA00-8AA0**	
SICAM PQS V8.0 options & add-ons		
Master protocols Power Quality		
SIMEAS R Master	**7KE9000-0CB11-8AA0**	
SIMEAS Q80	**7KE9000-0CB12-8AA0**	
Master protocols Power Automation (monitoring direction)		
IEC 60870-5-103 Master (monitoring direction)	**6MD9000-0CB00-8MA0**	
Client IEC 61850 (monitoring direction)	**6MD9000-0CE00-8MA0**	
Applications power quality		
Automatic Comtrade Import	**7KE9000-0BA60-8AA0**	
Automatic Comtrade Export	**7KE9000-0BA61-8AA0**	
Automatic PQDIF Import	**7KE9000-0BA62-8AA0**	
Automatic PQDIF Export	**7KE9000-0BA63-8AA0**	
Automatic Report Export	**7KE9000-0BA64-8AA0**	
Automatic Fault Location	**7KE9000-0BA65-8AA0**	
Notification (E-Mail, SMS)	**7KE9000-0BA66-8AA0**	
Automatic Grid Code Evaluation	**7KE9000-0BA67-8AA0**	
Scheduled PQ Reports	**7KE9000-0BA68-8AA0**	

Note:
The SICAM PQS system can be extended with SICAM PAS applications.
For configuring such a system, a configuration license is needed.
Either the existing runtime license can be expanded with a configuration license [→ a)]
or the configuration can be done on a separate configuration PC [→ b)].

* only makes sense in combination with the following license:
– Automatic Grid Code Evaluation.

Table 5/2 Selection and ordering data

Description	Order No.	Precondition
SICAM PAS base packages		
Configuration		
b) Configuration (up to 15 devices or up to 2000 master information objects)	**6MD9000-1MA20-8AA0**	
b) Configuration (more than 15 devices)	**6MD9000-1AA20-8AA0**	
SICAM PAS upgrades		
Functional upgrades – from "Runtime" to "Runtime & configuration"		
a) Configuration upgrade ≤ 15 (Runtime already available)	**6MD9004-0AA24-8AA0**	**7KE9000-1MA10-8*A0**
a) Configuration upgrade >15 (Runtime already available)	**6MD9004-0AA23-8AA0**	**7KE9000-1AA10-8*A0**
Functional upgrades with respect to number of supported devices		
"Full server" (Runtime & configuration) (more than 15 devices)	**6MD9004-0MA00-8AA0**	**7KE9000-1MA10-8*A0 and 6MD9004-0AA24-8AA0**
Configuration (more than 15 devices)	**6MD9004-0MA20-8AA0**	**6MD9000-1MA20-8AA0**
SICAM PAS options & add-ons		
Applications (power automation)		
Automation	**6MD9000-0BA50-8AA0**	
PDR recorder (post disturbance review)	**6MD9000-0BA70-8AA0**	
Add-ons (power automation)		
SICAM PAS applications (f-based load shedding, GIS monitoring, transformer monitoring)	**6MD9000-0PA01-8AA0**	
Secure communication (for TCP/IP-based communication T104 Slave, DNP 3 Slave, DNP 3 Master)	**6MD9000-0SC00-8AA0**	
Master protocols (bay devices, RTUs)		
Client IEC 61850	**6MD9000-0CE00-8AA0**	
IEC 60870-5-101 Master	**6MD9000-0CD00-8AA0**	
IEC 60870-5-103 Master	**6MD9000-0CB00-8AA0**	
IEC 60870-5-104 Master	**6MD9000-0CD04-8AA0**	
DNP V3.00 Master (incl. over IP)	**6MD9000-0CB07-8AA0**	
Modbus Master	**6MD9000-0CB05-8AA0**	
Driver module for Profibus DP	**6MD9000-0CB01-8AA0**	
Driver module for Profibus FMS (UPF)	**6MD9000-0CB02-8AA0**	
SINAUT LSA-ILSA	**6MD9000-0CB03-8AA0**	
OPC Client	**6MD9000-0BA40-8AA0**	
Slave protocols for control center connection		
IEC 60870-5-101 Slave	**6MD9000-0CC00-8AA0**	
IEC 60870-5-104 Slave	**6MD9000-0CC04-8AA0**	
IEC 61850 Server (Control Center Com.)	**6MD9000-0CF00-8AA0**	
DNP V3.00 Slave (serial and TCP/IP)	**6MD9000-0CC07-8AA0**	
Modbus Slave (serial and TCP/IP)	**6MD9000-0CC05-8AA0**	
CDT Slave (serial)	**6MD9000-0CC08-8AA0**	
TG8979 Slave (serial)	**6MD9000-0CC10-8AA0**	
OPC XML-DA server	**6MD9000-0CA41-8AA0**	
Functional upgrades for communication applications supporting just monitoring direction		
IEC 60870-5-103 Master (support additionally control direction)	**6MD9004-0CB00-8AA0**	**6MD9000-0CB00-8MA0**
Client IEC 61850 (support additionally control direction)	**6MD9004-0CE00-8AA0**	**6MD9000-0CE00-8MA0**

* only makes sense in combination with the following license:
– Automatic Grid Code Evaluation.

Table 5/2 Selection and ordering data

Selection and ordering data

Description	Order No.
SICAM PQ Analyzer V3.0	
Incident Explorer Incident Explorer for evaluation of fault records	
Usage on SICAM PAS fullserver	**6MD5530-0AA10-3AA0**
Up to 5 clients, archive transfer from 1 server / fullserver	**6MD5530-0AA10-3BA0**
Up to 5 clients, archive transfer from up to 5 server / fullserver	**6MD5530-0AA10-3BB0**
Up to 5 clients, archive transfer from more than 5 server / fullserver	**6MD5530-0AA10-3BC0**
More than 5 clients, archive transfer from 1 server / fullserver	**6MD5530-0AA10-3CA0**
More than 5 clients, archive transfer from up to 5 server / fullserver	**6MD5530-0AA10-3CB0**
More than 5 clients, archive transfer from more than 5 server / fullserver	**6MD5530-0AA10-3CC0**
Hints: – two redundant PAS / PQS Fullserver count as 1 Server. – SIMEAS R provides not only fault records but also continuous records which are managed with the PQ Explorer. –> for a complete evaluation of SIMEAS R data, at least the usage of PQ Basic is recommended.	
PQ Basic [1]	
including Incident Explorer for evaluation of fault records and **PQ Explorer**	
Usage on SICAM PAS fullserver	**7KE9200-0BA10-3AA0**
Up to 5 clients, archive transfer from 1 server / fullserver	**7KE9200-0BA10-3BA0**
Up to 5 clients, archive transfer from up to 5 server / fullserver	**7KE9200-0BA10-3BB0**
Up to 5 clients, archive transfer from more than 5 server / fullserver	**7KE9200-0BA10-3BC0**
More than 5 clients, archive transfer from 1 server / fullserver	**7KE9200-0BA10-3CA0**
More than 5 clients, archive transfer from up to 5 server / fullserver	**7KE9200-0BA10-3CB0**
More than 5 clients, archive transfer from more than 5 server / fullserver	**7KE9200-0BA10-3CC0**
PQ Standard [1 2]	
including PQ Basic and **enhanced PQ Explorer and Report Browser**	
Usage on SICAM PAS fullserver	**7KE9200-0CA10-3AA0**
Up to 5 clients, archive transfer from 1 server / fullserver	**7KE9200-0CA10-3BA0**
Up to 5 clients, archive transfer from up to 5 server / fullserver	**7KE9200-0CA10-3BB0**
Up to 5 clients, archive transfer from more than 5 server / fullserver	**7KE9200-0CA10-3BC0**
More than 5 clients, archive transfer from 1 server / fullserver	**7KE9200-0CA10-3CA0**
More than 5 clients, archive transfer from up to 5 server / fullserver	**7KE9200-0CA10-3CB0**
More than 5 clients, archive transfer from more than 5 server / fullserver	**7KE9200-0CA10-3CC0**
PQ Professional [1 2]	
including PQ Standard and **PQ Inspector**	
Usage on SICAM PAS fullserver	**7KE9200-0DA10-3AA0**
Up to 5 clients, archive transfer from 1 server / fullserver	**7KE9200-0DA10-3BA0**
Up to 5 clients, archive transfer from up to 5 server / fullserver	**7KE9200-0DA10-3BB0**
Up to 5 clients, archive transfer from more than 5 server / fullserver	**7KE9200-0DA10-3BC0**
More than 5 clients, archive transfer from 1 server / fullserver	**7KE9200-0DA10-3CA0**
More than 5 clients, archive transfer from up to 5 server / fullserver	**7KE9200-0DA10-3CB0**
More than 5 clients, archive transfer from more than 5 server / fullserver	**7KE9200-0DA10-3CC0**
SICAM PQ Analyzer can be extended with SIGRA (separate ordering) for enhanced fault record analysis.	
Functional upgrades	
Power Quality – features	
From Incident Explorer to PQ Basic	**7KE9200-4BA00-3AA0**
From PQ Basic to PQ Standard	**7KE9200-4CB00-3AA0**
From PQ Basic to PQ Professional	**7KE9200-4DB00-3AA0**
From PQ Standard to PQ Professional	**7KE9200-4DC00-3AA0**
Number of clients	
Up to 5 clients	**6MD5530-4AA0-3BA0**
More than 5 clients	**6MD5530-4AA0-3CA0**
Number of fullserver	
Up to 5 fullserver	**6MD5530-4AA0-3AB0**
More than 5 fullserver	**6MD5530-4AA0-3AC0**
Version upgrade	
Version upgrade to SICAM PQ Analyzer (Incident Explorer) V3.0 (from SICAM Recpro)	**6MD5530-3AA0-3AA0**

[1] Recommended SICAM PAS / PQS options: "Automatic Grid Code Evaluation" <–> 7KE9000-0BA67-8AA0.
[2] Recommended SICAM PAS / PQS options: "Scheduled PQ Reports" <–> 7KE9000-0BA68-8AA0.

Table 5/2 Selection and ordering data

SIEMENS



Power Quality devices for all applications

SIGUARD PDP
Wide Area Monitoring with PMU

siemens.com/powerquality

Contents – SIGUARD PDP

	Page
Description and applications	7/3
Synchrophasor technology, PMU	7/7
SIGUARD system structure	7/8
Selection and ordering data	7/11

SIGUARD PDP – Reliable system operation with wide area monitoring

The load on electricity supply systems has increased continuously over the past few years. There are many reasons for this:

- Increased cross-border power trading in Europe, for example, is placing new demands on the tie lines between control areas. For example, power transmission on tie lines in the European grid increased almost 6-fold from 1975 to 2008 (source: Statistical Yearbook of the ENTSO-E 2008).
- Increased input of wind power and the planned shutdown of existing power plants will extend the transmission distances between generation and consumers.
- Severe weather and storms can put important lines out of operation, exposing the remaining grid to increased load quickly.

This means that the power system is increasingly operated closer to its stability limit and new load flows arise that are unfamiliar to network control center operators. This is where SIGUARD PDP (Phasor Data Processor) is of huge benefit. This system for network monitoring using synchrophasors helps with fast appraisal of the current situation. Power swings and transients are indicated without delay to help the control center personnel find the causes and take countermeasures.

Advantages for the user:

- SIGUARD PDP, **a fast monitoring system**, detects the events and trends in grids with fluctuating load flows or highly loaded lines which conventional systems cannot detect at all or can detect too late.
- Detailed **search of causes** can take place after failures.
- **Investment decisions** for new equipment can be taken based on valid dynamic measurements.
- **Protection settings** can be checked and improved using the measured dynamic processes.

Possible applications

- Analysis of the power flows in the system
  SIGUARD-PDP can display a clear and up-to-date image of the current power flows in the system with just a few measured values from widely distributed phasor measurement units (PMU). This requires no knowledge of the network topology. The power flows are shown by means of phase angle differences (see Fig. 7/1).

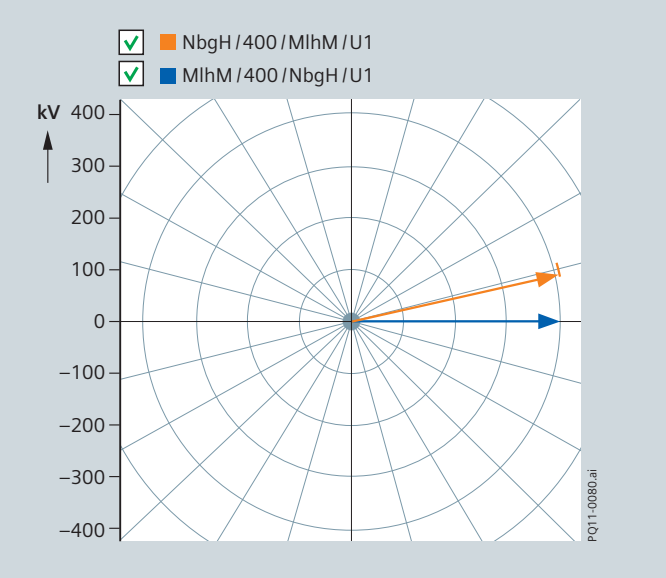

Fig. 7/1 Voltage vector of two measurement points in the network

- Monitoring of power swings
  All measured values from PMUs can be displayed and monitored with easy-to-configure phasor diagrams and time charts. Any power swings that occur are detected quickly and reliably. The monitored zone can be flexibly adjusted to the current situation in terms of time, geography, and content.
- Evaluation of the damping of power swings
  Using the function "Power Swing Recognition" an incipient power swing is detected and the appropriate damping is determined. Detection of a power swing and, if applicable, its insufficient or non-existing damping is signaled (alarm list). There are two ways of detecting a power swing: Based on angle differences between two voltages (two PMUs necessary) or based on power swing recognition of the active power (one PMU for current and voltage measured values is adequate).

Description and applications

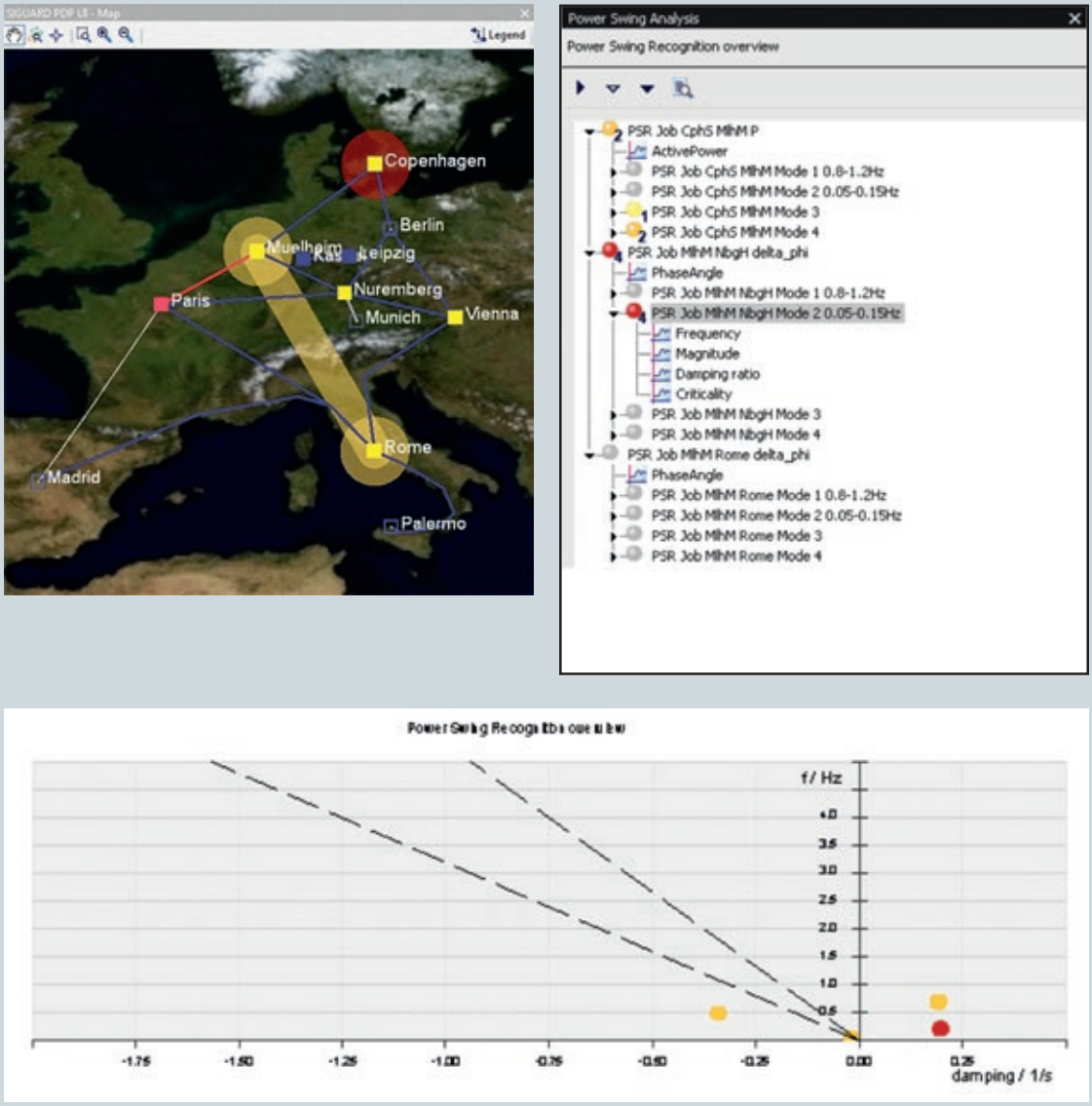

Fig. 7/2 Monitoring diagrams from the application "power swing recognition"

- Monitoring of the load on transmission corridors
  The voltage-stability curve is especially suitable for displaying the current load on a transmission corridor. The currently measured operating point is shown on the work curve of the line (voltage as a function of the transmitted power). In this way, the remaining reserve can be shown at any time. This requires PMUs at both ends of the line.

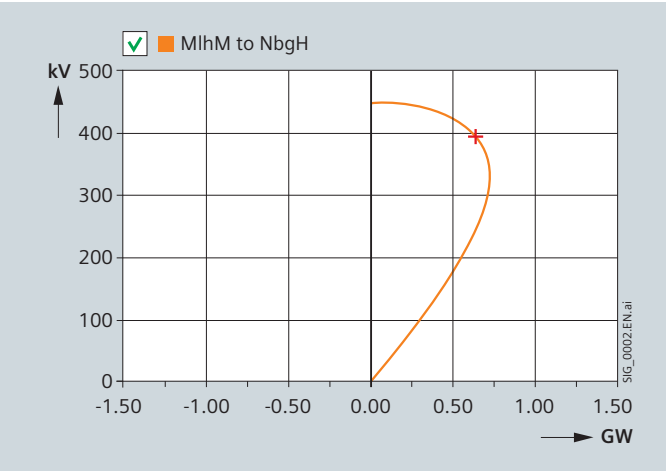

Fig. 7/3 Voltage-stability curve

- Island state detection
  This function automatically indicates if parts of the network become detached from the rest of the network. For this purpose, frequency differences and rates of frequency changes can be automatically monitored. If islands are detected, warnings and event messages are generated. In addition, the islands are marked in the graphic overview as colored areas.

11:09:52....	2010-...	Island detection	ISD potential network subsplit	appearing
11:09:52....	2010-...	Island detection	ISD network subsplit	appearing
11:09:52....	2010-...	Island detection	ISD potential network subsplit	disappearing

Table 7/1 Island state detection

- Retrospective event analysis
  SIGUARD PDP is ideal for analyzing critical events in the network. After switchover to offline mode, the entire archive can be systematically analyzed and the events played back as often as necessary. This makes dynamic events transparent, and reports can be compiled quickly and precisely. Simply copy the informative diagrams from SIGUARD PDP into your reports.
- Alarming on limit value violation with an alarm list and color change in the geographic network overview map. This allows you to locate the position and cause of the disturbance quickly. This function is also available for analyzing the archive.
- Display of the power system status as a characteristic value for the stability of the power system. Due to the constant availability of the power system status curve in the upper part of the screen, the operator is constantly informed about trends in system dynamics and any remaining reserves. This curve shows a weighted average of the distances of all measured values to their limit values.

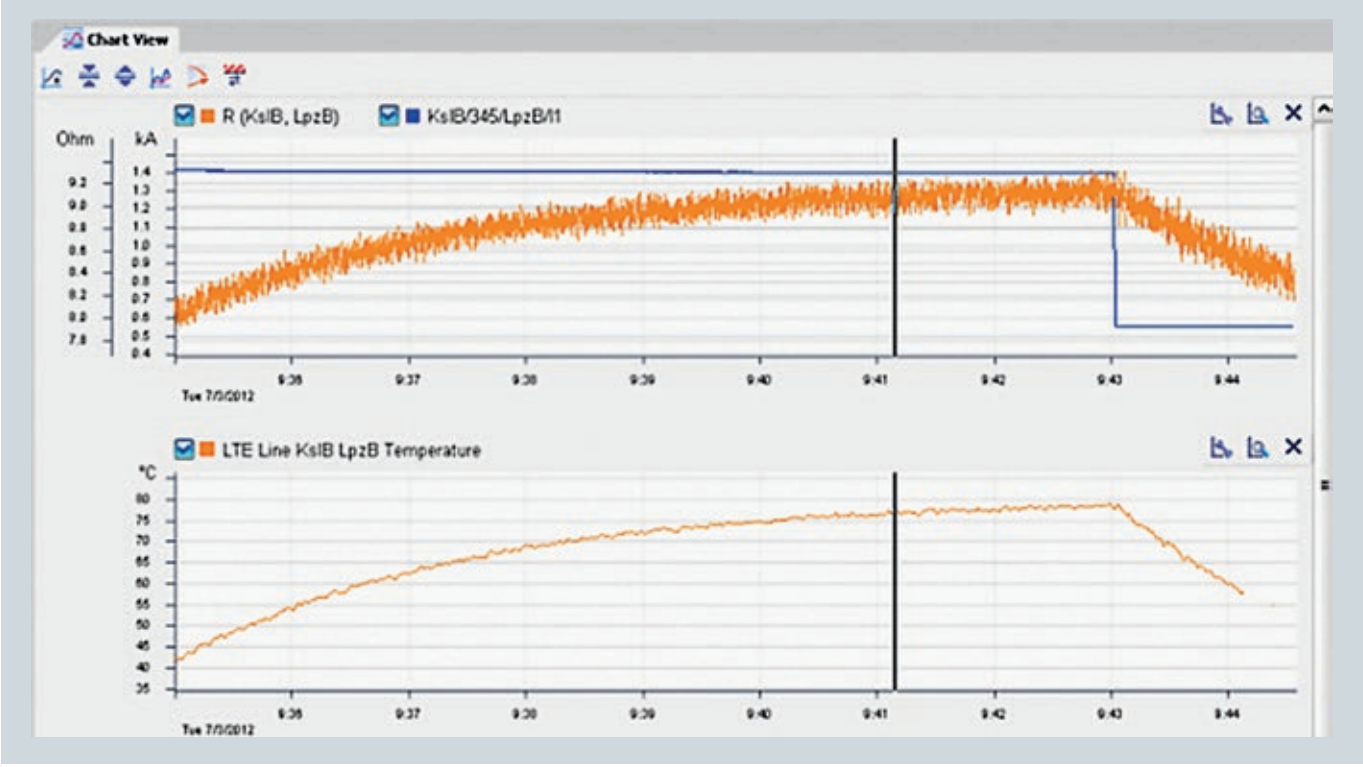

Fig. 7/4 Calculated line temperature and current / resistance curve

- Line thermal estimation
  The "Line Thermal Estimation" function calculates the line resistance and the average line temperature with the help of the current and voltage measured values of two PMUs at the line ends. This principle is applicable for short and medium lines (up to ca. 300 km). Fig. 7/4 shows the principle in the event of a sudden current variation on a line. The upper curves show the current and the calculated line resistance, the lower curve shows the line temperature calculated from them.

- Phase Angle Display
  The Phase Angle Display Function can be activated in the geographic overview (Fig. 7/5). It shows the voltage phase angle values between PMUs in a coloured area. Together with the colour scale for the voltage phase angles, the operator can check immediately the stability situation in the system. Colouring as well as min- and max-values can be set with the SIGUARD PDP Engineer (Fig. 7/6).

Description and applications

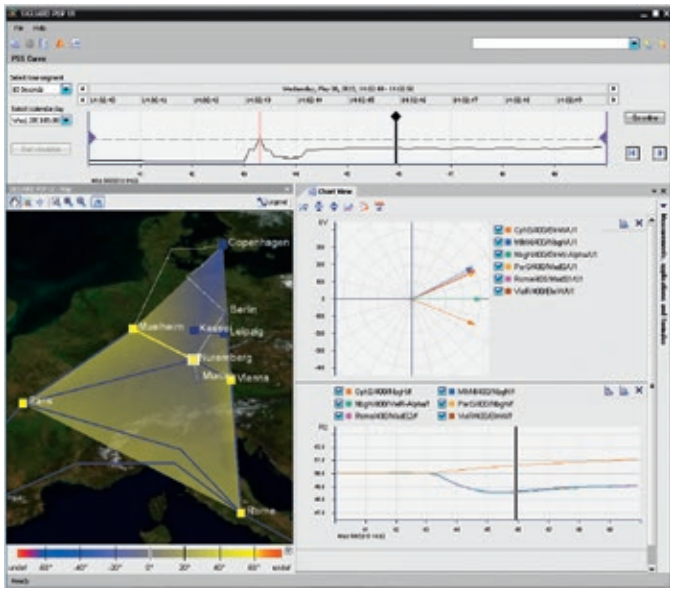

Fig. 7/5 Phase Angle Display (in preparation for V3.10)



Fig. 7/6 Engineering of the Phase Angle Display with the SIGUARD PDP Engineer

- Event-Triggered Archiving
  Use SIGUARD PDP to automatically save recordings of abnormal system events. Define trigger events such as limit violations, recognized power swings etc. Select Lead Time and Follow-Up time with SIGUARD PDP Engineer (Fig. 7/7). The system then automatically saves all measurements in case the predefined event happens.

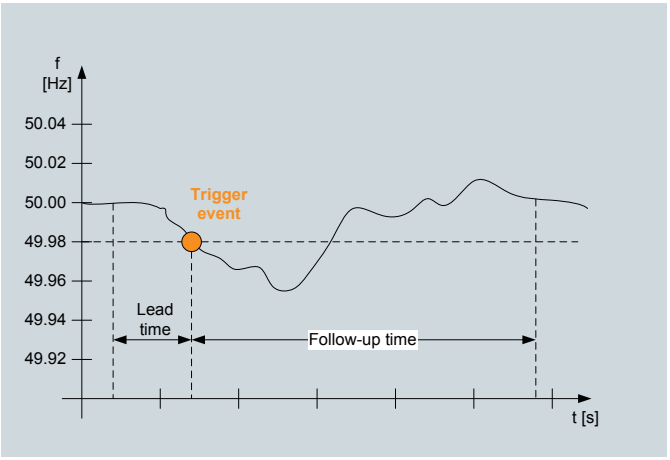

Fig. 7/7 Automatic Time Trigger (example for frequency)

Synchrophasor technology

Synchrophasors are vector measured values, i.e. the magnitude and phase of the current and voltage are measured and transmitted. Applying a time stamp to the transmitted vector measured values allows a comparison of the measured values from different locations in the network. The figure shows how vector measured values are collected from different regions in the network and brought together at a central location.

To enable further processing of the information obtained from the synchrophasors, time stamping must be extremely precise. For that reason, the PMUs feature GPS-based time synchronization.

Basic differences from "conventional" measuring points (substation automation, RTU):

Measured values from substation automation or a remote terminal unit	Synchrophasor from a PMU
Slow updating cycle (e.g. typically once every 5 sec)	Continuous updating (measured value stream), e.g. typically 10 values per second (reporting rate)
Measured values without time stamp	Each measured value with precise time stamp
rms values without phase angle	Current and voltage are supplied as a vector value with amplitude and phase

With these characteristics, the synchrophasors can provide a dynamic view in real-time of power swings and other phenomena in network operation.

Phasor Measurement Units (PMU)

A phasor measurement unit (PMU, figure 7/9) is a device for measuring and transmitting synchrophasors. The frequency and the frequency change (df/dt) are also detected. A PMU can be an independent device, or integrated in a protection unit or in a fault recorder. For this purpose, Siemens offers the SIPROTEC5 PMU. The SIPROTEC5 PMU (for instance, available in the bay control unit 6MD85) complies with the IEEE C37.118 (2011) standard which describes the communication protocol of the synchrophasors and the dynamic requirements of the PMU.



Fig. 7/9 SIPROTEC 5 PMU

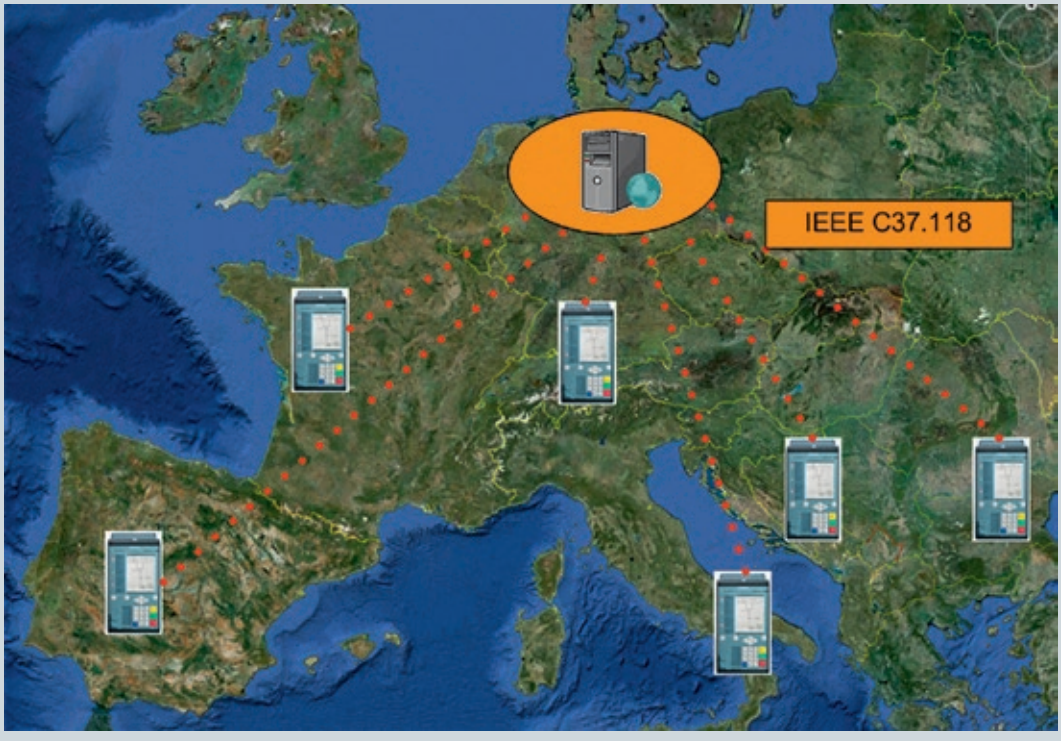

Fig. 7/8 Principle of the geographically distributed measured values

SIGUARD system structure

SIGUARD Phasor Data Processing system

The SIGUARD Phasor Data Processing (PDP) System has a modular structure and can be distributed over multiple computers. The system structure is shown in figure 7/10.

SIGUARD PDP Server

The central component of SIGUARD PDP is the server. It is used both as the communication hub and the archive link. It also provides basic services such as system monitoring. The configuration can include multiple operator stations (SIGUARD PDP UI), which can be remote from the server or operated on the same computer. In a typical configuration, the server will run on a server computer with a backed-up power supply (UPS) while the operator station is located in an office environment or in the network control center.

SIGUARD PDP Server Redundancy

For high availability requirements, the SIGUARD PDP Server can be configured redundant, see Fig. 7/11. Both server receive the phasor measurement stream from all PMUs, but only one of them is writing the information into the archive. This configuration is also possible with redundant communication lines.

SIGUARD PDP UI operator station

The operator station is normally remote from the Phasor Data Concentrator. Multiple operator stations can be connected.

On an operator station, the measured values can be viewed in **online mode**. In **offline mode**, significant events can be replayed for precise analysis. All windows run concurrently. Figures 7/12 and 7/13 show examples of the user interface. The user interface can be quickly and simply adapted during operation. The power system status curve (upper portion of the screen) shows the weighted sum of the distances of all measured values from their limits, thus providing a view of the network status and the trend. If the curve exceeds the limit value, it will be colored red. Network areas that are in a critical state are displayed in the lower part of the screen in a geographic overview. Next to this is the work area in which phasor diagrams, time charts, and application curves (e. g. voltage stability curves) can be positioned. Further windows show the selection of measured values, pending messages, or the formula editor. The operator interface can be distributed over multiple screens, if necessary.

SIGUARD PDP COM

This system module provides the communication link to the other PDCs. Again, protocol IEEE C37.118 is used. SIGUARD PDP COM sends the configured data to up to five recipients at a settable transmission rate (frames per second). The transmission rates can be set separately and the measured values to be transmitted can be selected from all the available PMU measured values for each channel.

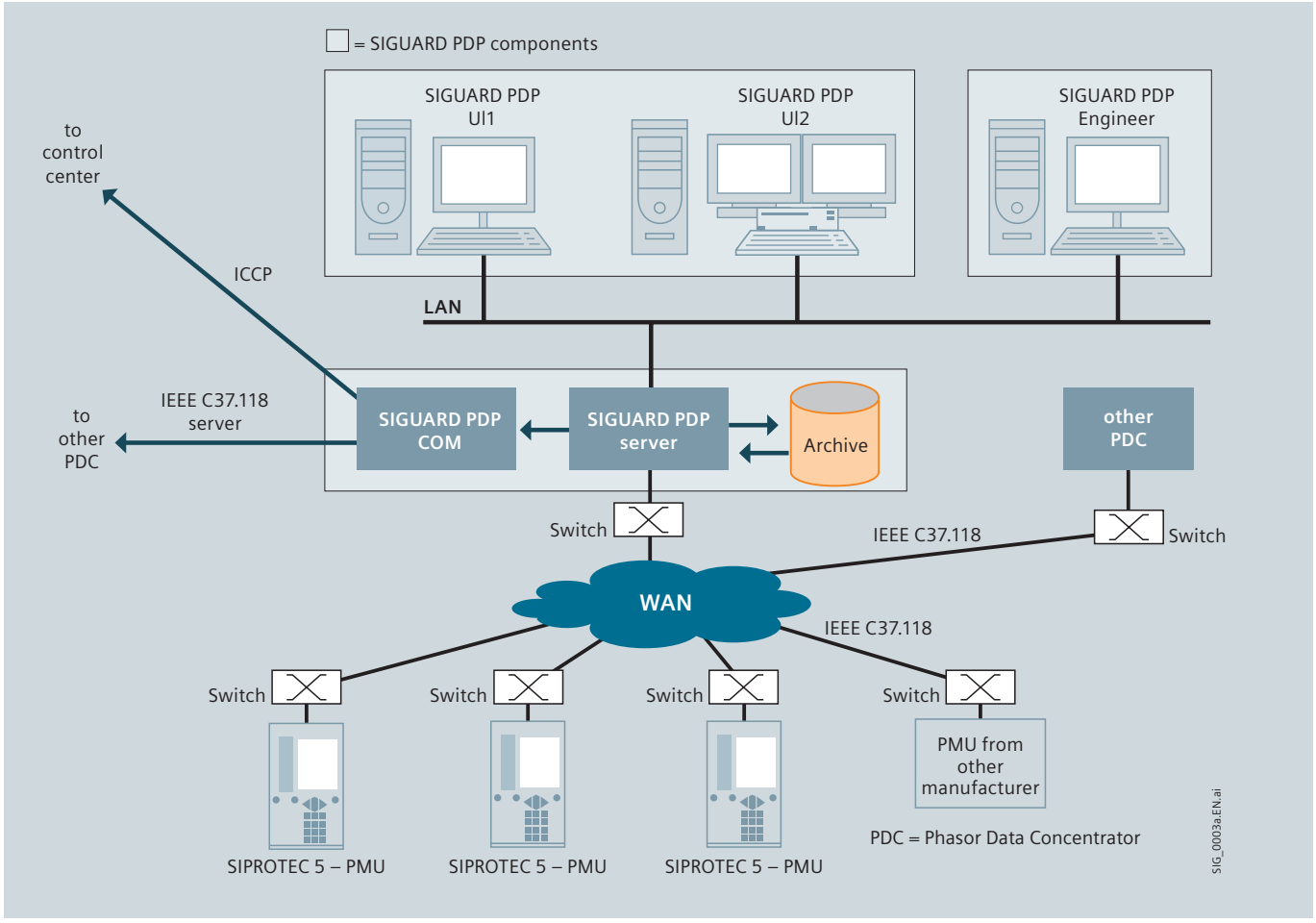

Fig. 7/10 Structure of the SIGUARD Phasor Data Processing System

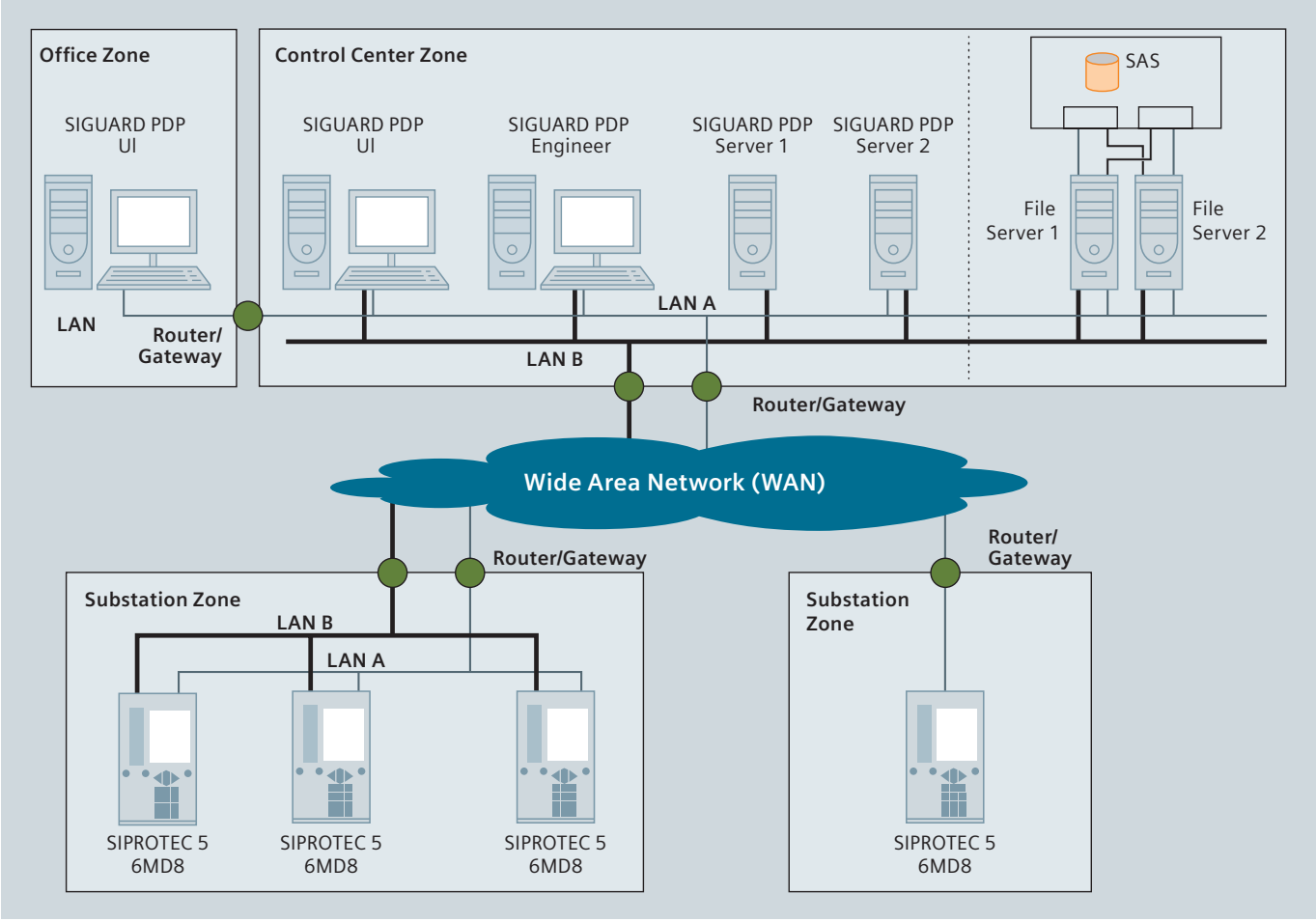

Fig. 7/11 Redundant configuration of SIGUARD PDP Servers

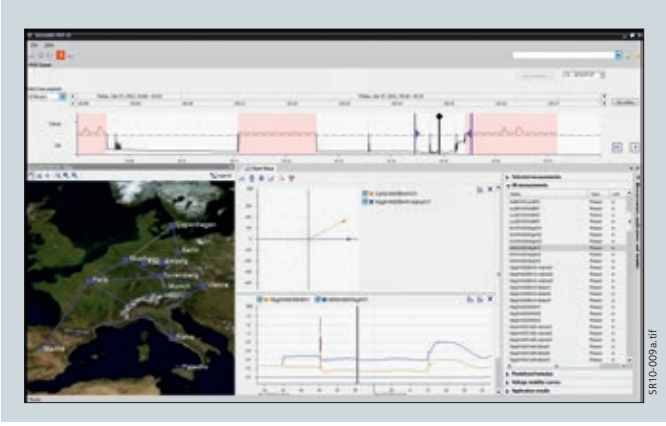

Fig. 7/12 SIGUARD PDP user interface (example 1, offline)

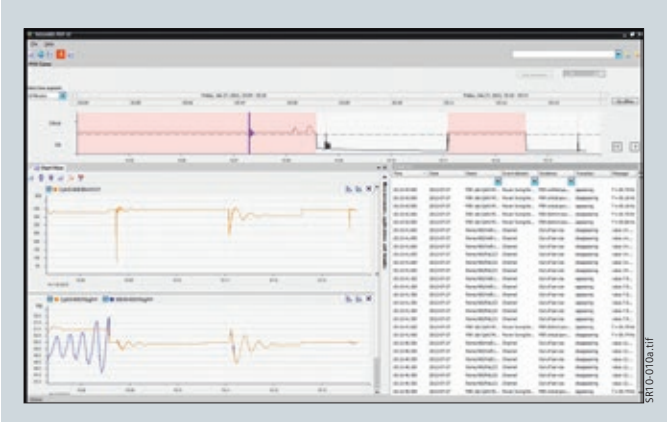

Fig. 7/13 SIGUARD PDP user interface (example 2, online)

SIGUARD system structure

SIGUARD PDP Engineer

SIGUARD PDP Engineer is a user-friendly configuration tool for the entire SIGUARD PDP system. The five work areas on the main screen clearly designate the task groups:

- PMU configuration
- Mathematical calculations
- Graphics for the geographical overview
- Applications (voltage stability curve, island state detection, power swing recognition, line thermal estimation)
- Communication / data distribution

An integrated plausibility check ensures the consistency of the configuration.

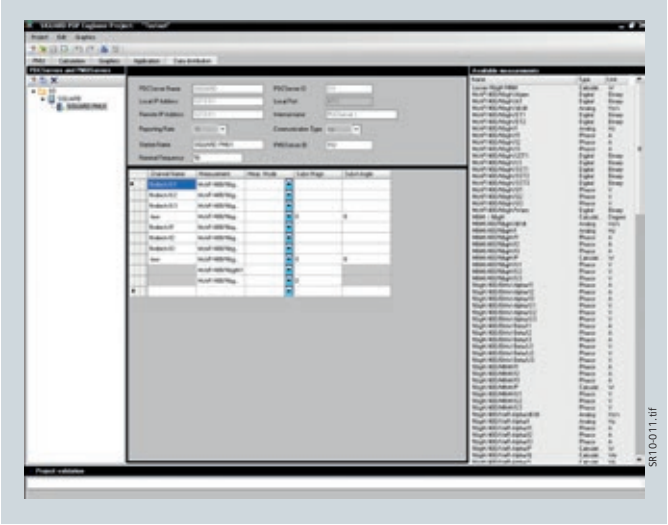

Fig. 7/14 SIGUARD PDP Engineer

Communication links

- IEEE C37.118 server / client
- OPC-to-OPC clients (application: automation functions)
- ICCP (to network control centers).

Highlights

- Phasor data processor per IEEE C37.118 standard
- 2 selectable monitoring modes:
  – Online mode
  – Offline mode (analysis of past events)
- Vector view or time chart view can be selected for all phasors
- Calculation and display of the power system status curve
- Intelligent functions for problem display and analysis (e. g. power swing recognition, island state detection)
- System monitoring, incl. communication links and PMU status
- Geographic overview
- Basis for fast reporting after faults
- Flexible analysis with formula editor for calculations based on measured values
- Limit values that can be changed online
- User interface runs under Windows 8.1 Pro (32 Bit or 64 Bit), the PDP Server under Windows Server 2012 R2 Standard (64 Bit).

Ordering Data

Choose whether you want to use SIGUARD PDP in the compact version “Substation PDC” as a communications machine or in its full user interface with the applications (“Enhanced PDC”). You can also select your own tailor-made solution from these product families.

Three different SIGUARD PDP variants are available:

Version	MLFB body number	Description
SIGUARD PDP – Substation PDC	7KE6041	Low-cost PDC version, without operating station and no application, such as island state detection, possible. Use in the substation as data node for synchrophasor measured values.
SIGUARD PDP – Enhanced PDC	7KE6042	Full version including all options for connecting operating stations and use of applications.
SIGUARD PDP – Functions Upgrade	7KE6040	By upgrade the desired options can be added to a basic license or a pre-defined combination.
SIGUARD PDP Version Update	7KE6043	Update to newest Software Version, for existing installations (no additional license)

Table 7/2 Selection and ordering data

The following table shows the complete order numbers of the basic licenses, pre-defined combinations and the function upgrades.

Order No.	Designation	Description
7KE6041-0AA00-2AA0	Basic license "SIGUARD PDP Substation PDC"	Substation PDC, no UI and no application possible, max. 200 channels, max. 2 PDC connections
7KE6042-0AA00-2AA0	Basic license "SIGUARD PDP Enhanced PDC"	Enhanced PDC, 2 UIs, max. 200 channels, max. 2 PDC connections
7KE6041-0BA00-2AA0	Pre-defined combination "SIGUARD PDP Substation PDC"	Substation PDC, no UI and no application possible, max. 600 channels, max. 2 PDC connections
7KE6042-0CB10-2AA0	Pre-defined combination "SIGUARD PDP Enhanced PDC"	Enhanced PDC, max. 4000 channels, max. 3 PDC connections, 3 UIs
7KE6042-0CD44-2DA0	Pre-defined combination "SIGUARD PDP Enhanced PDC"	Enhanced PDC, unlimited number of channels (check manual), max. 5 PDC connections, unlimited number of UIs (check manual), applications "island state detection", "power swing recognition", "line thermal estimation", ICCP, OPC (full functionality of version V3.2)
7KE6040-0BA00-2AA0	Function Upgrade "600 channels"	Connection of 600 channels
7KE6040-0CA00-2AA0	Function Upgrade "4000 channels"	Connection of 4000 channels
7KE6040-0DA00-2AA0	Function Upgrade "unlimited channel number (check manual)"	Connection to channels not limited by license
7KE6040-0AB00-2AA0	Function Upgrade "max. 3 PDCs"	Connection to up to 3 other PDCs as PDC server
7KE6040-0AC00-2AA0	Function Upgrade "max. 4 PDCs"	Connection to up to 4 other PDCs as PDC server
7KE6040-0AD00-2AA0	Function Upgrade "max. 5 PDCs"	Connection to up to 5 other PDCs as PDC server
7KE6040-0AA10-2AA0	Function Upgrade "max. 3 UIs"	Connection of up to 3 operating stations
7KE6040-0AA20-2AA0	Function Upgrade "max. 5 UIs"	Connection of up to 5 operating stations
7KE6040-0AA30-2AA0	Function Upgrade "max. 7 UIs"	Connection of up to 7 operating stations
7KE6040-0AA40-2AA0	Function Upgrade "max. 8 UIs"	Connection of up to 8 operating stations
7KE6040-0AA50-2AA0	Function Upgrade "unlimited numer of UIs (check manual)"	Connection to UIs not limited by license
7KE6040-0AA01-2AA0	Function Upgrade "island state detection"	Release of the application "island state detection" (only possible if UI existing)
7KE6040-0AA02-2AA0	Function Upgrade "island state detection" and "power swing recognition"	Release of the application "island state detection" and "power swing recognition" (only possible if UI existing)
7KE6040-0AA03-2AA0	Function Upgrade "Line Thermal Estimation"	Release of the application "Line Thermal Estimation" (only possible if UI existing)
7KE6040-0AA00-2BA0	Function Upgrade "OPC communication"	Release of communication according to OPC protocol
7KE6040-0AA00-2CA0	Function Upgrade "ICCP communication"	Release of communication according to ICCP protocol
7KE6040-0AA00-2DA0	Function Upgrade "ICCP and OPC communication"	Release of communication according to ICCP and OPC protocol
7KE6043-0AA00-3AA2	Software Update to Version V3.20	No license, only DVD with software

Table 7/3 Selection and ordering data

Two changes in the licensing have been made:

1) Instead of number of PMUs, the number of channels is licensed. The reason for this is that this is the relevant variable for PDC loading.
2) There are Order numbers for unlimited amount of channels and User Interfaces (UI). These have been created to be able to benefit from development in faster computer hardware which enables SIGUARD PDP for larger configurations.

Notes

Legal Notice

CE conformity

This product complies with the directive of the Council of the European Communities on the approximation of the laws of the Member States relating to electromagnetic compatibility (EMC Council Directive 2004/108/EC) and concerning electrical equipment for use within specified voltage limits (Low-Voltage Directive 2006/95/EC).
This conformity has been established by means of tests conducted by Siemens AG according to the Council Directive in agreement with the generic standards EN 61000-6-2 and EN 61000-6-4 for the EMC directives, and with the standard EN 61010-1 for the low-voltage directive.
The device has been designed and produced for industrial use. The product conforms to the standard EN 60688.

Disclaimer of liability

This document has been subjected to rigorous technical review before being published. It is revised at regular intervals, and any modifications and amendments are included in the subsequent issues. The content of this document has been compiled for information purposes only.
Although Siemens AG has made best efforts to keep the document as precise and up-to-date as possible, Siemens AG shall not assume any liability for defects and damage which result through use of the information contained herein.
This content does not form part of a contract or of business relations; nor does it change these. All obligations of Siemens AG are stated in the relevant contractual agreements.
Siemens AG reserves the right to revise this document from time to time.
Document version: 04
Release status: 09.2014

Copyright

Copyright © Siemens AG 2014. All rights reserved.
The disclosure, duplication, distribution and editing of this document, or utilization and communication of the content are not permitted, unless authorized in writing. All rights, including rights created by patent grant or registration of a utility model or a design, are reserved.

Registered trademarks

SIPROTEC, SIMEAS, DIGSI, SICAM, SIGUARD, DAKON, and SIMATIC are registered trademarks of Siemens AG. Any unauthorized use is illegal. All other designations in this document can be trademarks whose use by third parties for their own purposes can infringe the rights of the owner.

Published by and copyright © 2014:
SIEMENS AG
Energy Management
Energy Automation
Products
Humboldtstr.59
90459 Nuremberg, Germany
www.siemens.com/powerquality

All rights reserved.
If not stated otherwise on the individual pages of this catalog, we reserve the right to include modifications, especially regarding the stated values, dimensions and weights.
Drawings are not binding.
All product designations used are trademarks or product names of Siemens AG or other suppliers.
If not stated otherwise, all dimensions in this catalog are given in mm / inch.

Subject to change without prior notice.
The information in this document contains general descriptions of the technical options available, which may not apply in all cases. The required technical options should therefore be specified in the contract.

For all products using security features of OpenSSL the following shall apply:
This product includes software developed by the OpenSSL Project for use in the OpenSSL Toolkit (www.openssl.org).
This product includes cryptographic software written by Eric Young (eay@cryptsoft.com).

For more information, please contact
our Customer Support Center.
Phone: +49 180 524 84 37
Fax: +49 180 524 24 71
(Charges depending on the provider)
E-mail: support.energy@siemens.com

Order No. IC1000-K4000-A101-A4-7600
Printed in Germany
Dispo 06200, SIMC-0000-44559
KG 10.14 0.8 184 EN
HL 14089304 HHGlobal
Printed on elementary chlorine-free bleached paper.