SIEMENS



www.siemens.com/protection

SIPROTEC Compact
7SD80, 7SJ80, 7SJ81, 7SK80, 7SK81, 7RW80, 7SC80

Catalog SIP 3.01 · Edition 3

Answers for infrastructure and cities.

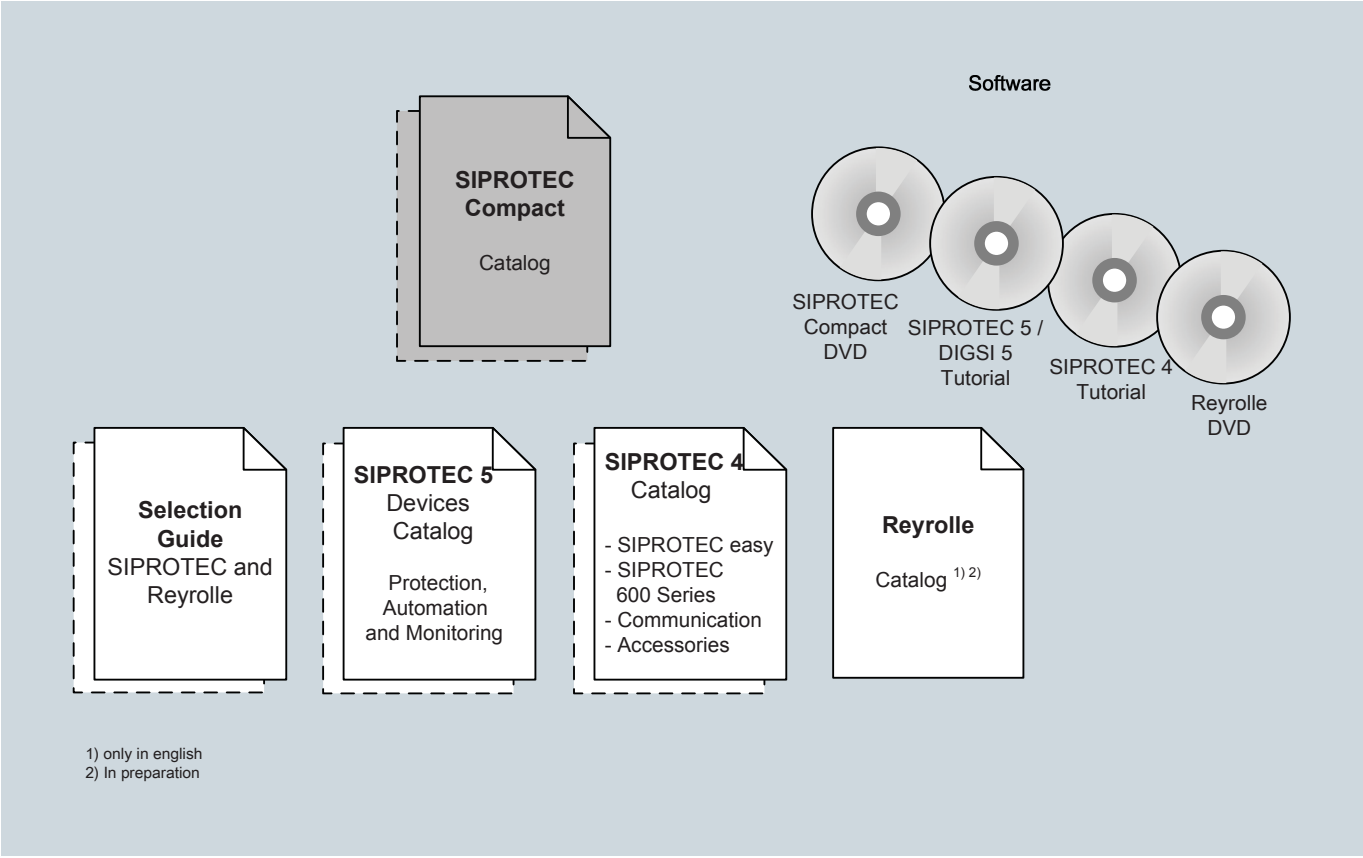

Fig. 1/1 Overview of Siemens protection catalogs

SIPROTEC Compact catalog

The catalog describes the features of the SIPROTEC Compact series and presents the available devices and their application possibilities.

Selection guide

The selection guide offers an overview of the device series of the Siemens protection devices, and a device selection table.

SIPROTEC 5 catalog

The system catalog describes the features of the SIPROTEC 5 system. The SIPROTEC 5 device catalogs describe device-specific features such as scope of functions, hardware and application.

SIPROTEC 4, SIPROTEC series 600, SIPROTEC easy, communication and accessories

This catalog describes the features of the device series SIPROTEC 4, SIPROTEC series 600 and SIPROTEC easy, as well as their devices. In further chapters, the accessories of the complete SIPRROTEC family for communication, auxiliary relays and test equipment are described.

Reyrolle Katalog

This catalog gives an overvoew of the Reyrolle devices and features.

Contents

SIPROTEC Compact 7SD80, 7SJ80, 7SJ81, 7SK80, 7SK81, 7RW80, 7SC80

Catalog SIP 3.01 · Edition 3

Invalid: Catalog SIP 3.01 · Edition 2

www.siemens.com/siprotec

Introduction	Page	
Editorial	1/4	1
Overview of all SIPROTEC device series	1/5 to 1/10	
SIPROTEC Compact		2
Selection Table, System features		
Operating programs	2/1 to 2/16	
Products		
Line Differential Protection SIPROTEC 7SD80	3/1 to 3/22	3
Overcurrent Protection SIPROTEC 7SJ80	4/1 to 4/30	4
Overcurrent Protection SIPROTEC 7SJ81 for Low-Power Current Transformer Applications	5/1 to 5/22	5
Generator and Motor Protection SIPROTEC 7SK80	6/1 to 6/28	6
Generator and Motor Protection SIPROTEC 7SK81 for Low-Power Current Transformer Applications	7/1 to 7/26	7
Voltage and Frequency Protection SIPROTEC 7RW80	8/1 to 8/16	8
Feeder Protection SIPROTEC 7SC80	9/1 to 9/32	9
Attachment		
Ordering examples and accessories	10/3	10
Selection and ordering data	10/4	
Dimension drawings	10/5	
Legal notice	10/7	

ISO 9001
ISO 14001
DNV
Certified Company

OHSAS 18001
DNV
Certified Company

The products and systems described in this catalog are manufactured and sold according to a certified management system (acc.to ISO 9001, ISO 14001 and BS OHSAS 18001).

Introduction

Editorial

1

We are pleased to have the opportunity to introduce our new SIPROTEC Compact catalog to you.

The SIPROTEC Compact series has been especially conceived for the requirements of the medium-voltage and industrial sector, but it can of course also be used for other applications such as high-voltage switchgear, for example.

The outstanding feature of the SIPROTEC Compact series is the compact design offering, at the same time, a high functional density and user friendliness. In the development of the SIPROTEC Compact series we have integrated our experience from more than 100 years of protection systems, the proven functions of SIPROTEC 4, and many customer suggestions.

The Compact series fits perfectly into the SIPROTEC concept, and can be combined with other devices of this system as required.

With SIPROTEC we are offering you an open and future-proof system family to solve the requirements of modern power supply systems.

At the beginning, please orientate yourself by means of a short overview of the complete SIPROTEC family, and then discover the system features of the SIPROTEC Compact series.

Please convince yourself of the performance of SIPROTEC Compact series, and develop the possible solutions for your requirements.

SIPROTEC – safe, reliable and efficient.

Yours sincerely,

Ingo Erkens

General Manager
Infrastructure & Cities Sector
Smart Grid Division
Energy Automation



Fig. 1/1 SIPROTEC Compact front



Fig. 1/2 Application in medium voltage

Solutions for today's and future power supply systems – for more than 100 years

SIPROTEC has established itself on the energy market for decades as a powerful and complete system family of numerical protection relays and bay controllers from Siemens.

SIPROTEC protection relays from Siemens can be consistently used throughout all applications in medium and high voltage. With SIPROTEC, operators have their systems firmly and safely under control, and have the basis to implement cost-efficient solutions for all duties in modern, intelligent and "smart" grids. Users can combine the units of the different SIPROTEC device series at will for solving manifold duties – because SIPROTEC stands for continuity, openness and future-proof design.

As the innovation driver and trendsetter in the field of protection systems for more than 100 years, Siemens helps system operators to design their grids in an intelligent, ecological, reliable and efficient way, and to operate them economically. As a pioneer, Siemens has decisively influenced the development of numerical protection systems (Fig. 1/5). The first application went into operation in Würzburg, Germany, in 1977. Consistent integration of protection and control functions for all SIPROTEC devices was the innovation step in the 90ies. After release of the communication standard IEC 61850 in the year 2004, Siemens was the first manufacturer worldwide to put a system with this communication standard into operation. In the meantime we have delivered more than 300,000 devices with IEC 61850 included.



Fig. 1/3 SIPROTEC family

How can system operators benefit from this experience?

- Proven and complete applications
- Easy integration into your system
- Highest quality of hardware and software
- Excellent operator friendliness of devices and tools
- Easy data exchange between applications
- Extraordinary consistency between product and system-engineering
- Reduced complexity by easy operation
- Siemens as a reliable, worldwide operating partner.

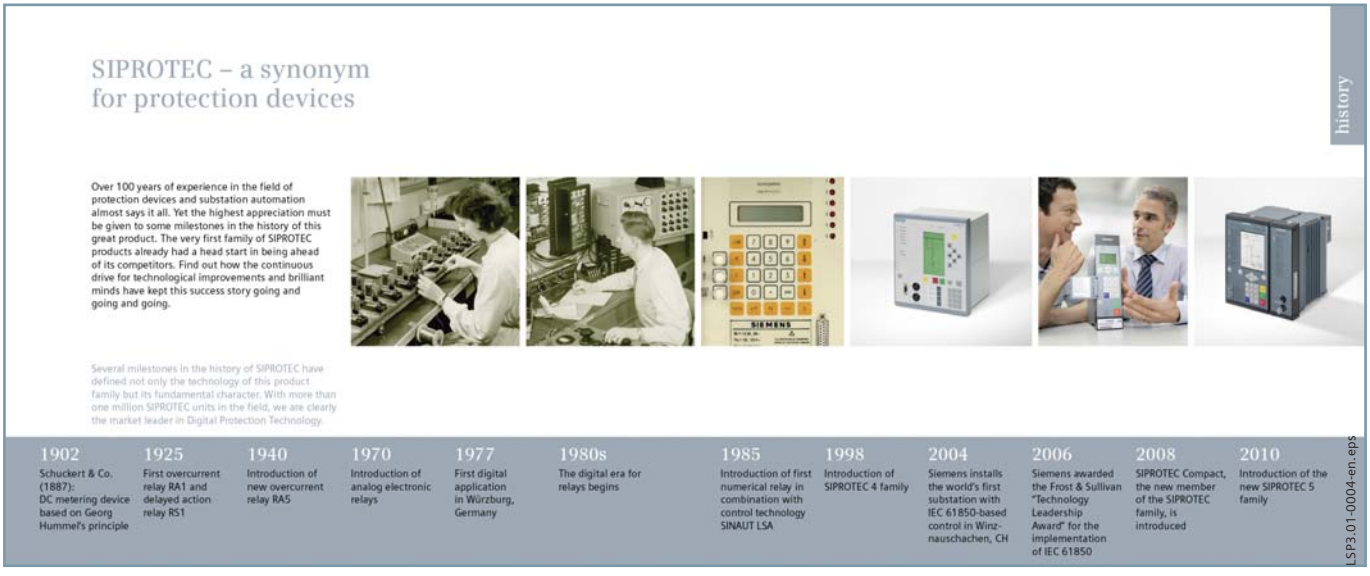

Fig. 1/4 SIPROTEC – Pioneer over generations

1

SIPROTEC 5 – the new benchmark for protection, automation and monitoring of transmission grids

The SIPROTEC 5 series is based on the long field experience of the SIPROTEC device series, and has been especially designed for the new requirements of modern systems. For this purpose, SIPROTEC 5 is equipped with extensive functionalities and device types. With the holistic and consistent engineering tool DIGSI 5, a solution has also been provided for the increasingly complex processes, from the design via the engineering phase up to the test and operation phase.

Thanks to the high modularity of hardware and software, the functionality and hardware of the devices can be tailored to the requested application and adjusted to the continuously changing requirements throughout the entire life cycle.

Besides the reliable and selective protection and the complete automation function, SIPROTEC 5 offers an extensive database for operation and monitoring of modern power supply systems. Synchrophasors (PMU), power quality data and extensive operational equipment data are part of the scope of supply.

- Powerful protection functions guarantee the safety of the system operator's equipment and employees
- Individually configurable devices save money on initial investment as well as storage of spare parts, maintenance, expansion and adjustment of your equipment
- Clear and easy-to-use of devices and software thanks to user-friendly design
- Increase of reliability and quality of the engineering process
- High safety by consistent implementation of Safety and Security
- Powerful communication components guarantee safe and effective solutions
- Full compatibility between IEC 61850 Editions 1 and 2
- Integrated switch for low-cost and redundant optical and electrical Ethernet rings
- Ethernet redundancy protocols RSTP, PRP and HSR for highest availability
- Efficient operating concepts by flexible engineering of IEC 61850 Edition 2
- Comprehensive database for monitoring of modern power grids
- Optimal smart automation platform for transmission grids based on integrated synchrophasor measurement units (PMU) and power quality functions.



Fig. 1/5 SIPROTEC 5 – modular hardware



Fig. 1/6 SIPROTEC 5 – modular process connection



Fig. 1/7 Application in a high-voltage power system

SIPROTEC Compact –
Maximum protection – minimum space

Reliable and flexible protection for energy distribution and industrial systems with minimum space requirements. The devices of the SIPROTEC Compact family offer an extensive variety of functions in a compact and thus space-saving 1/6 x 19" housing. The devices can be used as main protection in medium-voltage applications or as back-up protection in high-voltage systems.

SIPROTEC Compact provides suitable devices for many applications in energy distribution, such as the protection of feeders, lines or motors. Moreover, it also performs tasks such as system decoupling, load shedding, load restoration, as well as voltage and frequency protection.

The SIPROTEC Compact series is based on millions of operational experience with SIPROTEC 4 and a further-developed, compact hardware, in which many customer suggestions were integrated. This offers maximum reliability combined with excellent functionality and flexibility.

- Simple installation by means of pluggable current and voltage terminal blocks
- Thresholds adjustable via software (3 stages guarantee a safe and reliable recording of input signals)
- Easy adjustment of secondary current transformer values (1 A/5 A) to primary transformers via DIGSI 4
- Quick operations at the device by means of 9 freely programmable function keys
- Clear overview with six-line display
- Easy service due to buffer battery replaceable at the front side
- Use of standard cables via USB port at the front
- Integration in the communication network by means of two further communication interfaces
- Integrated switch for low-cost and redundant optical Ethernet rings
- Ethernet redundancy protocols RSTP, PRP and HSR for highest availability
- Reduction of wiring between devices by means of cross-communication via Ethernet (IEC 61850 GOOSE)
- Time synchronization to the millisecond via Ethernet with SNTP for targeted fault evaluation
- Adjustable to the protection requirements by means of "flexible protection functions"
- Comfortable engineering and evaluation via DIGSI 4.



Fig. 1/8 SIPROTEC Compact



Fig. 1/9 SIPROTEC Compact – rear view



Fig. 1/10 Feeder Protection SIPROTEC 7SC80 with HMI

1

SIPROTEC 4 – the proven, reliable and future-proof protection for all applications

SIPROTEC 4 represents a worldwide successful and proven device series with more than 1 million devices in field use.

Due to the homogenous system platform, the unique engineering program DIGSI 4 and the great field experience, the SIPROTEC 4 device family has gained the highest appreciation of users all over the world. Today, SIPROTEC 4 is considered the standard for numerical protection systems in all fields of application.

SIPROTEC 4 provides suitable devices for all applications from power generation and transmission up to distribution and industrial systems.

SIPROTEC 4 is a milestone in protection systems. The SIPROTEC 4 device series implements the integration of protection, control, measuring and automation functions optimally in one device. In many fields of application, all tasks of the secondary systems can be performed with one single device. The open and future-proof concept of SIPROTEC 4 has been ensured for the entire device series with the implementation of IEC 61850.

- Proven protection functions guarantee the safety of the systems operator's equipment and employees
- Comfortable engineering and evaluation via DIGSI 4
- Simple creation of automation solutions by means of the integrated CFC
- Targeted and easy operation of devices and software thanks to user-friendly design
- Powerful communication components guarantee safe and effective solutions
- Maximum experience worldwide in the use of SIPROTEC 4 and in the implementation of IEC 61850 projects
- Future-proof due to exchangeable communication interfaces and integrated CFC
- Integrated switch for low-cost and redundant optical Ethernet rings
- Ethernet redundancy protocols RSTP, PRP and HSR for highest availability.



Fig. 1/11 SIPROTEC 4

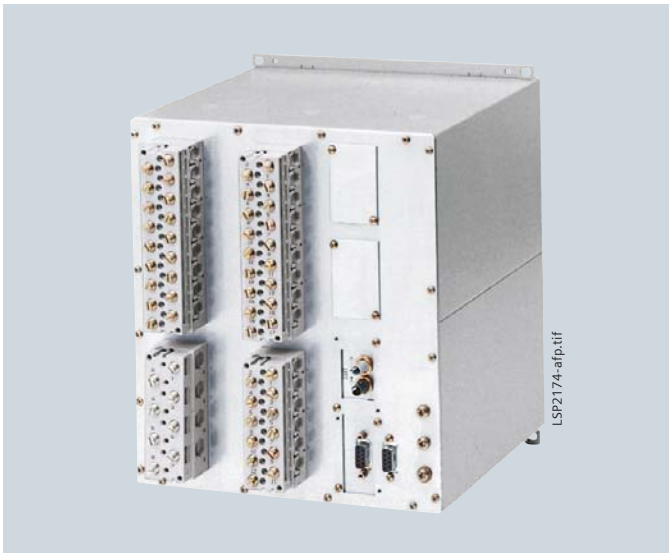

Fig. 1/12 SIPROTEC 4 – rear view



Fig. 1/13 SIPROTEC 4 application in power stations

SIPROTEC easy

SIPROTEC easy are CT power supplied, numerical overcurrent protection relays, which can be used as line and transformer protection (back-up protection) in electrical power supply systems with single-ended supply. They offer overcurrent protection and overcurrent protection functions according to IEC and ANSI. The comfortable operation via DIP switch is self-explanatory and simple.

- Two-stage time-overcurrent protection
- Saving the auxiliary power supply by operation via integrated current transformer supply
- Cost-efficient due to the use of instrument transformers with low ratings
- Tripping via pulse output (DC 24 V / 0.1 Ws) or tripping relay output
- Simple, self-explanatory parameterization and operation via DIP switch directly at the device
- Easy installation due to compact assembly on DIN rail.



Fig. 1/14 SIPROTEC easy

SIPROTEC Compact (series 600)

The devices of the SIPROTEC Compact series (series 600) are compact, numerical protection devices for application in medium-voltage or industrial power supply systems. The corresponding device types are available for the different applications such as time-overcurrent protection, line differential protection, transient ground-fault relay or busbar protection.

- Space-saving due to compact design
- Reliable process connections by means of solid terminal blocks
- Effective fault evaluation by means of integrated fault recording and SIGRA 4
- Communication interface
- Operable and evaluable via DIGSI 4
- Different device types available for directional and non-directional applications.



Fig. 1/15 SIPROTEC Compact (series 600)

Introduction

1

SIEMENS



Protection Systems
SIPROTEC Compact

2

	Seite
SIPROTEC Compact selection table	2/3
SIPROTEC Compact system features	2/4
Operation	2/6
Construction and hardware	2/7
Control and automation functions	2/8
Operating programs DIGSI 4 and SIGRA 4	2/9
Communication	2/12

SIPROTEC Compact selection table

■ basic
● optional
– not available
1) in preparation

			Line differential protection	Overcurrent and feeder protection		Generator and motor protection		Voltage and frequency protection	Feeder protection
			SIPROTEC Compact						
ANSI	Siemens Funktion (de)	Abk.	7SD80	7SJ80	7SJ81	7SK80	7SK81	7RW80	7SC80
	Protection functions for 3-pole tripping	3-pole	■	■	■	■	■	■	■
	Protection functions for 1-pole tripping	1-pole	–	–	–	–	–	–	1)
14	Locked rotor protection	*I*> + V<	–	–	–	■	■	–	–
FL	Fault locator	FL	–	●	●	–	–	–	●
24	Overexcitation protection	*V*/f	–	–	–	–	–	●	–
25	Synchrocheck, synchronizing function	Sync	–	●	–	–	–	●	●
27	Undervoltage protection	*V*<	●	●	●	●	●	■	●
27Q	Undervoltage-controlled reactive power protection	*Q*>, *V*>	–	●	–	–	–	–	–
32	Directional power supervision	*P*<>, *Q*<>	–	●	●	●	●	–	●
37	Undercurrent protection, underpower	*I*<, *P*<	–	■	■	■	■	–	■
38	Temperature supervision	θ>	–	–	–	■	■	–	–
46	Unbalanced-load protection	I2>	–	■	■	■	■	–	■
46	Negative-sequence system overcurrent protection	I2>, I2/I1>	–	■	■	■	■	–	■
47	Phase-sequence-voltage supervision	LA, LB, LC	–	●	●	●	●	■	●
48	Starting-time supervision	I^2_{start}	–	–	–	■	■	–	–
49	Thermal overload protection	θ, I^2t	■	■	■	■	■	–	■
50/50N	Definite time-overcurrent protection	*I*>	■	■	■	■	■	–	■
50Ns	Sensitive ground-current protection	I_{Ns}>	–	●	●	●	●	–	■
	Intermittent ground-fault protection	Iie>	–	■	–	■	–	–	–
50L	Load-jam protection	$I>_L$	–	–	–	■	■	–	–
50BF	Circuit-breaker failure protection	CBFP	■	■	■	■	■	–	■
51C	Cold load pickup		–	■	■	■	■	–	■
51/51N	Inverse time-overcurrent protection	I_P, I_{NP}	■	■	■	■	■	–	■
51V	Voltage dependent overcurrent protection	t=f(*I*)+*V*<	–	●	–	●	–	–	●
55	Power factor	cos φ	–	●	●	●	●	–	●
59	Overvoltage protection	*V*>	●	●	●	●	●	■	●
59N	Overvoltage protection, zero-sequence system	*V0*>	●	●	●	●	●	■	●
59R, 27R	Rate-of-voltage-change protection	d*V*/d*t*	–	●	–	●	–	■	●
60FL	Measuring-voltage failure detection		●	●	●	●	●	–	●
66	Restart inhibit	I^2t	–	–	–	■	■	–	–
67	Directional time-overcurrent protection, phase	*I*>, $I_P \angle (V,I)$	●	●	●	–	–	–	●
67N	Dir.time-overcurrent protection for ground-faults	I_N>, $I_{NP} \angle (V,I)$	●	●	●	●	●	–	●
67Ns	Dir. sensitive ground-fault detection for systems with resonant or isolated neutral	$I_{Ns} \angle (V,I)$	–	●	●	●	●	–	●
67Ns	Directional intermittent ground fault protection	Iie dir>	–	●	–	●	–	–	–
74TC	Trip-circuit supervision	TCS	■	■	■	■	■	■	■
79	Automatic reclosing	AR	●	●	●	–	–	–	●
81	Frequency protection	*f*<, *f*>	●	●	●	●	●	■	●
81R	Rate-of-frequency-change protection	df/dt	●	●	●	●	●	■	●
	Vector-jump protection	$\Delta\varphi_U$>	–	–	–	–	–	●	–
81LR	Load restoration	LR	–	–	–	–	–	●	–
85	Teleprotection		■	–	–	–	–	–	–
86	Lockout		■	■	■	■	■	■	■
87	Differential protection	Δ*I*	■	–	–	–	–	–	–
87N	Differential ground-fault protection	ΔI_N	■	●	–	–	–	–	■
	Broken-wire detection for differential protection		■	–	–	–	–	–	–
	Weitere Funktionen								
	Measured values		■	■	■	■	■	■	■
	Switching-statistic counters		■	■	■	■	■	■	■
	Logic editor		■	■	■	■	■	■	■
	Inrush-current detection		■	■	■	■	■	–	■
	External trip initiation		■	■	■	■	■	■	■
	Control		■	■	■	■	■	■	■
	Fault recording of analog and binary signals		■	■	■	■	■	■	■
	Monitoring and supervision		■	■	■	■	■	■	■
	Protection interface, serial		■	–	–	–	–	–	–
	No. Setting groups		4	4	4	4	4	4	4
	Changeover of setting group		■	■	■	■	■	■	■
	Circuit breaker test		■	–	–	–	–	–	–

Tabelle 2/1 SIPROTEC Compact relay selection table

SIPROTEC Compact system features

Field devices in energy distribution systems and in industrial applications must cover the most varying tasks, and yet be adjustable easily and at short notice. These tasks comprise, for example:

- Protection of different operational equipment such as lines, cables, motors and busbars
- Decoupling and disconnecting of parts of the power supply system
- Load shedding and load restoration
- Voltage and frequency protection
- Local or remote control of circuit-breakers
- Acquisition and recording of measured values and events
- Communication with neighboring devices or the control center.

Fig. 2/1 shows exemplary how the most different tasks can be easily and safely solved with the matching SIPROTEC Compact devices.

Operation

During the development of SIPROTEC Compact, special value was placed not only on a powerful functionality, but also on simple and intuitive operation by the operating personnel. Freely assignable LEDs and a six-line display guarantee an unambiguous and clear indication of the process states.

In conjunction with up to 9 function keys and the control keys for the operational equipment, the operating personnel can react quickly and safely to every situation. This ensures a high operational reliability even under stress situations, thus reducing the training effort considerably.

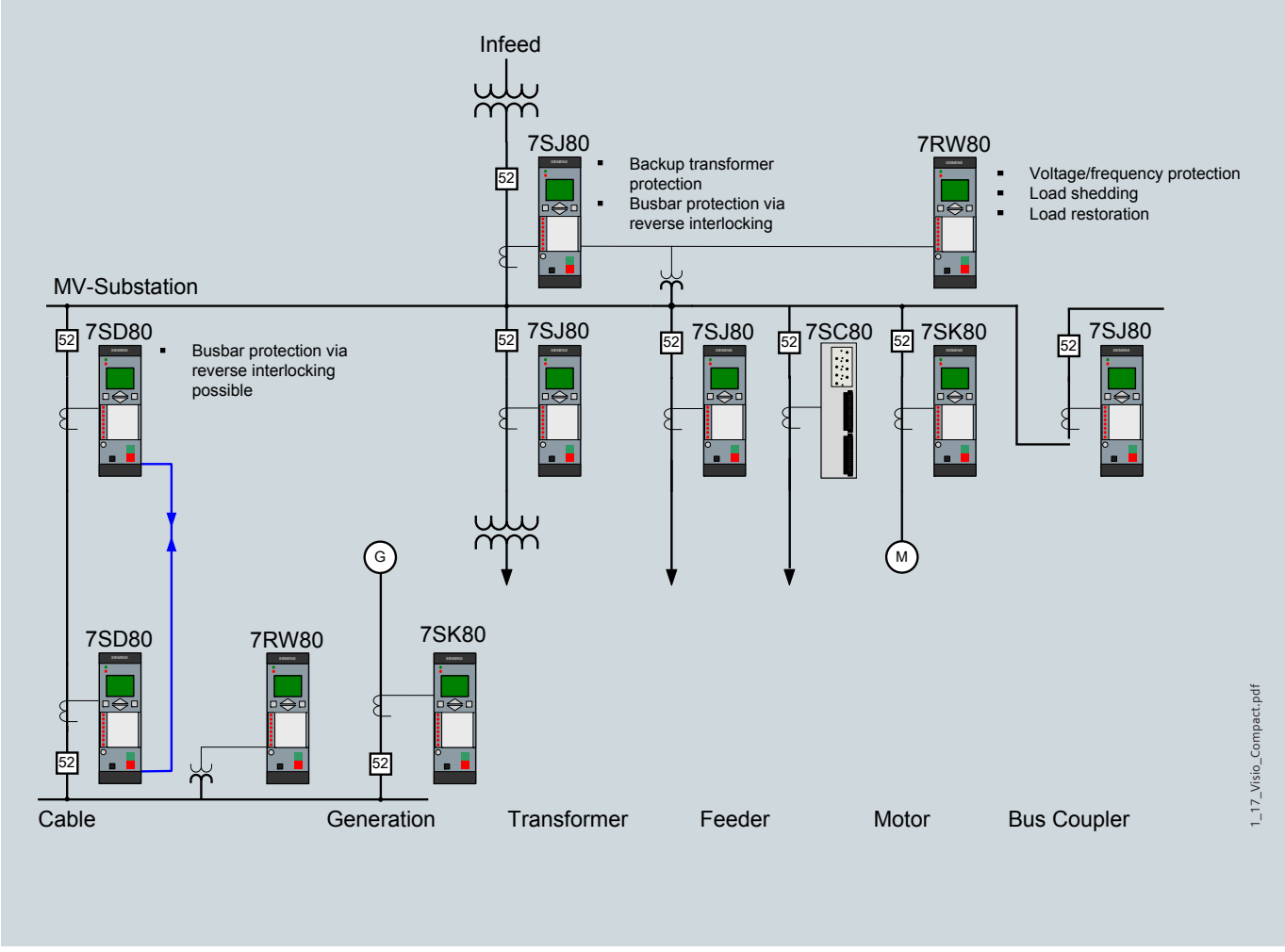

Fig. 2/1 Fields of application in a typical MV system

Feeder Protection SIPROTEC 7SC80

The Feeder Automation device SIPROTEC 7SC80 is designed for decentralized as well as for centralized feeder automation applications. This solution allows various flexible high speed applications like

FLISR (Fault Location, Isolation, and Service Restoration)

Detect and locate a fault in the feeder, isolate the faulty section and set the healthy portions of the feeder back into service

Source transfer

Detect and isolate a faulty source and set the de-energised sections of the feeder back into service

Load Balancing

Balance the load within a feeder by moving the disconnection.

Activation of individual line sections

Isolate a dedicated section of a feeder for maintenance without affecting other sections. Fig. 2/2 shows an example of a typical ring main application with overhead lines and 5 sections. Every section is protected and automated by the SIPROTEC 7SC80 Feeder Protection.

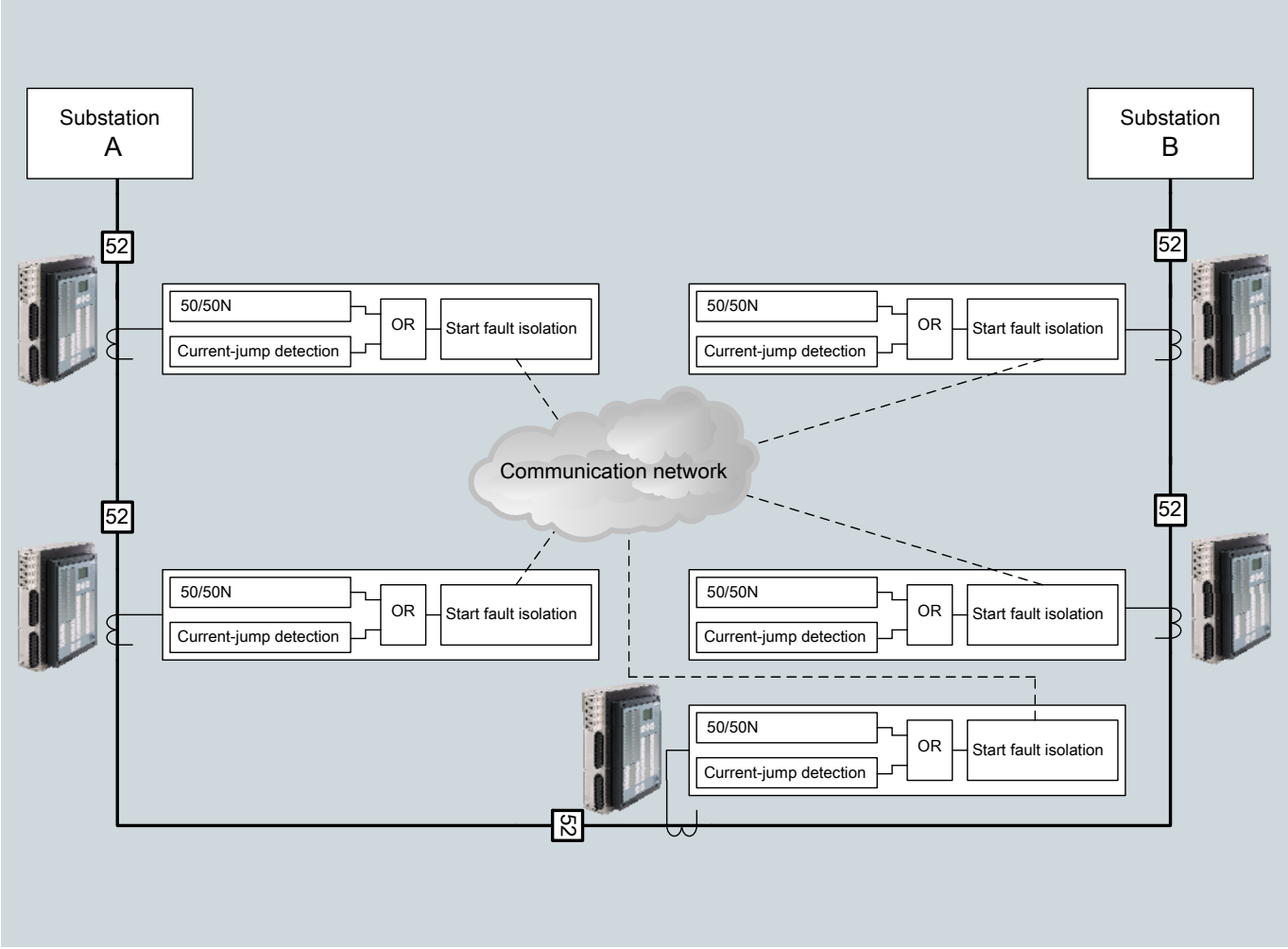

Fig. 2/2 Fields of application with feeder protection SIPROTEC 7SC80

Operation

Local operation

All operations and information can be executed via an integrated user interface:

2 operation LEDs

In an illuminated 6-line LC display, process and device information can be indicated as text in different lists.

4 navigation keys

8 freely programmable LEDs serve for indication of process or device information. The LEDs can be labeled user-specifically. The LED reset key resets the LEDs.

9 freely configurable function keys support the user in performing frequent operations quickly and comfortably.

Numerical operation keys

USB user interface (type B) for modern and fast communication with the operating software DIGSI.

Keys “O” and “I” for direct control of operational equipment.

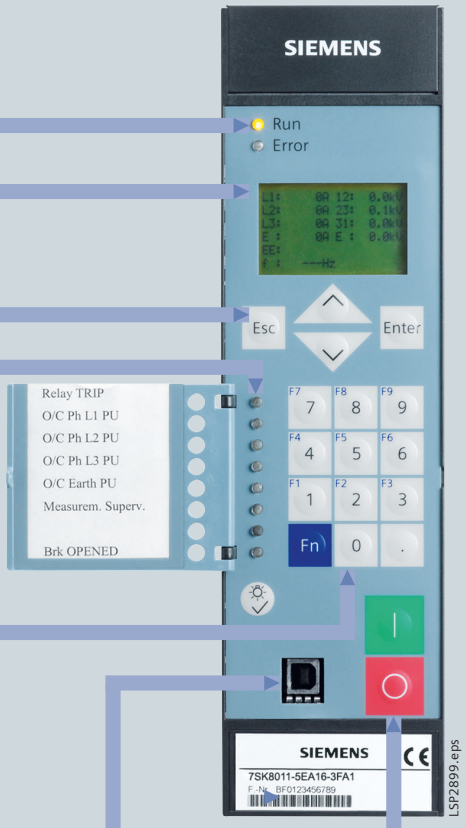

Fig. 2/3
SIPROTEC Compact with open board



Fig. 2/4
SIPROTEC Compact with closed board and open battery cover

Battery cover accessible from outside.

Connection techniques and housing with many advantages

The relay housing is 1/6 of a 19" rack and makes replacement of predecessors model very easy. The height is 244 mm (9.61").

Pluggable current and voltage terminals allow for pre-wiring and simplify the exchange of devices in the case of support. CT shorting is done in the removable current terminal block. It is thus not possible to open-circuit a secondary current transformer.

All binary inputs are independent and the pick-up thresholds are settable using software settings (3 stages). The relay current transformer taps (1 A / 5 A) are new software settings. Up to 9 function keys can be programmed for predefined menu entries, switching sequences, etc. The assigned function of the function keys can be shown in the display of the relay.

With overcurrent protection SIPROTEC 7SJ81 there is also a device for low-power current transformer applications.

Current terminals – ring-type lugs	
Connection	W_{max} = 9.5 mm
Ring-type lugs	*d1* = 5.0 mm
Wire size	2.0 – 5.2 mm² (AWG 14 – 10)
Current terminals – single cables	
Cable cross-section	2.0 – 5.2 mm² (AWG 14 – 10)
Conductor sleeve with plastic sleeve	L = 10 mm (0.39 in) or L = 12 mm (0.47 in)
Stripping length (when used without conductor sleeve)	15 mm (0.59 in) Only solid copper wires may be used.
Voltage terminals – single cables	
Cable cross-section	0.5 – 2.0 mm² (AWG 20 – 14)
Conductor sleeve with plastic sleeve	L = 10 mm (0.39 in) or L = 12 mm (0.47 in)
Stripping length (when used without conductor sleeve)	12 mm (0.347 in) Only solid copper wires may be used.

Table 2/2 Wiring specifications for process connection

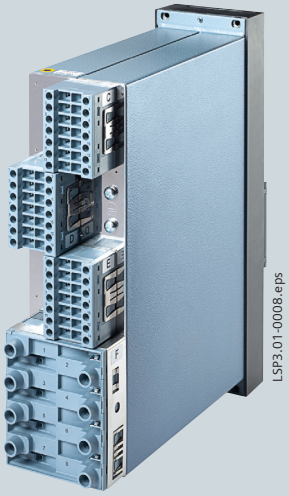

Fig. 2/5 7SK80, 7SJ80, 7SD80 rear view



Fig. 2/6 Voltage terminal block

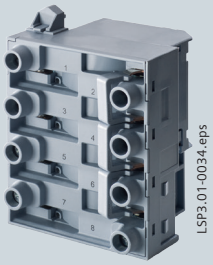

Fig. 2/7 Current terminal block

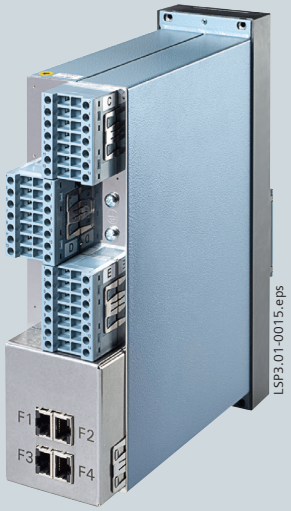

Fig. 2/8 7SJ81, 7SK81 rear view



Fig. 2/9 7RW80 rear view



Fig. 2/10 Front view, surface-mounting housing

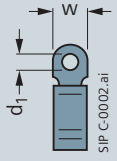

Fig. 2/11 Ring-type lug

Control and automation functions

Control

In addition to the protection functions, SIPROTEC Compact units also support all control and monitoring functions that are required for operating medium-voltage or high-voltage substations. The status of primary equipment or auxiliary devices can be obtained from auxiliary contacts and communicated to the unit via binary inputs. Therefore it is possible to detect and indicate both the OPEN and CLOSED position or a fault or intermediate circuit-breaker or auxiliary contact position.

The switchgear or circuit-breaker can be controlled via:

– integrated operator panel

– binary inputs

– substation control and protection system

– DIGSI 4.

Automation/user-defined logic

With integrated logic, the user can create, through a graphic interface (CFC), specific functions for the automation of a switchgear or a substation. Functions are activated using function keys, a binary input or through the communication interface.

Switching authority

Switching authority is determined by set parameters or through communications to the relay. Each switching operation and switch-position change will be noted in the operational log. Command source, switching device, cause (spontaneous change or command) and result of a switching operation will be stored.

Command processing

All functionalities of the command processing are available. This includes the processing of single and double commands with or without feedback, sophisticated monitoring of the control hardware and software, checking of the external process, control actions using functions such as runtime monitoring and automatic command termination after output. Here are some typical applications:

- Single and double commands using 1, 1 plus 1 common or 2 trip contacts
- User-definable bay interlocks
- Operating sequences combining several switching operations, such as control of circuit-breakers, disconnectors and grounding switches
- Triggering of switching operations, indications or alarms by combination with existing information.

Assignment of feedback to command

The positions of the circuit-breaker or switching devices and transformer taps are acquired through feedback. These indication inputs are logically assigned to the corresponding command outputs. The unit can therefore distinguish whether the indication change is a result of switching operation or whether it is an undesired spontaneous change of state.

Chatter disable

The chatter disable feature evaluates whether, in a set period of time, the number of status changes of indication input exceeds a specified number. If exceeded, the indication input is blocked for a certain period, so that the event list will not record excessive operations.

Indication filtering and delay

Binary indications can be filtered or delayed. Filtering serves to suppress brief changes in potential at the indication input. The indication is passed on only if the indication voltage is still present after a set period of time. In the event of an indication delay, there is a delay for a preset time. The information is passed on only if the indication voltage is still present after this time.

Indication derivation

User-definable indications can be derived from individual or a group of indications. These grouped indications are of great value to the user that need to minimize the number of indications sent to the system interface.

DIGSI 4, an operating software for all SIPROTEC protection devices

The PC operating program DIGSI 4 is the user interface to the SIPROTEC devices, regardless of their version. It is designed with a modern, intuitive user interface.

With DIGSI 4, SIPROTEC devices are configured and evaluated – it is the tailored program for industrial and energy distribution systems.

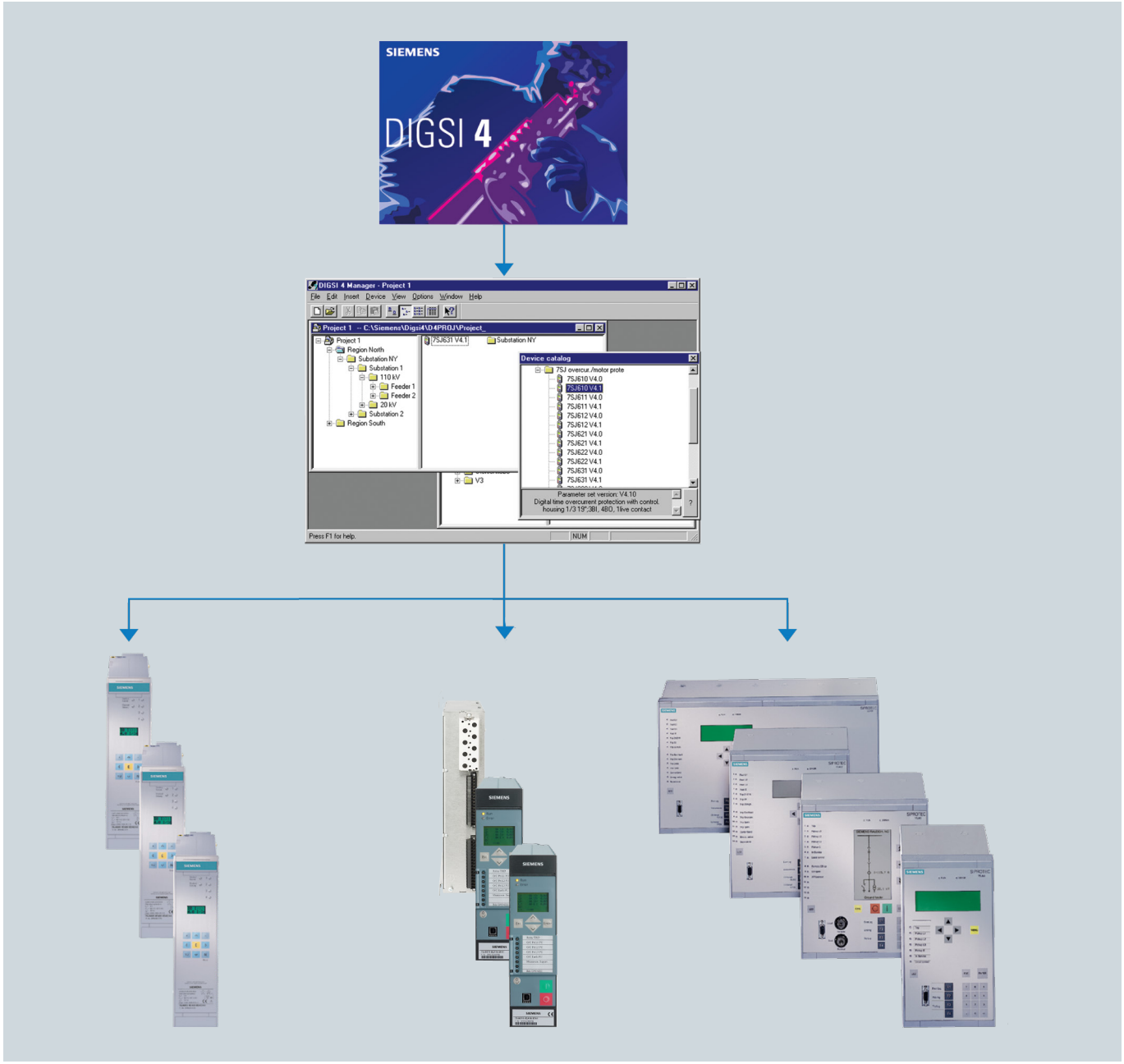

Fig. 2/12 DIGSI 4 operating program

Operating programs DIGSI 4 and SIGRA 4

Simple protection setting

From the numerous protection functions it is possible to easily select only those which are really required (see Fig. 2/13). This increases the clearness of the other menus.

Device setting with primary or secondary values

The settings can be entered and displayed as primary or secondary values. Switching over between primary and secondary values is done with one mouse click in the tool bar (see Fig. 2/13).

Assignment matrix

The DIGSI 4 matrix shows the user the complete configuration of the device at a glance (Fig. 2/14). For example, the assignment of the LEDs, the binary inputs and the output relays is displayed in one image. With one click, the assignment can be changed.

IEC 61850 system configurator

The IEC 61850 system configurator, which is started out of the system manager, is used to determine the IEC 61850 network structure as well as the extent of data exchange between the participants of a IEC 61850 station. To do this, subnets are added in the "network" working area – if required –, available participants are assigned to the subnets, and addressing is defined. The "assignment" working area is used to link data objects between the participants, e.g., the starting message of the *V* /inverse time-overcurrent protection *I* > function of feeder 1, which is transferred to the incoming supply in order to prompt the reverse interlocking of the V /inverse time-overcurrent protection *I* >> function there (see Fig. 2/15).

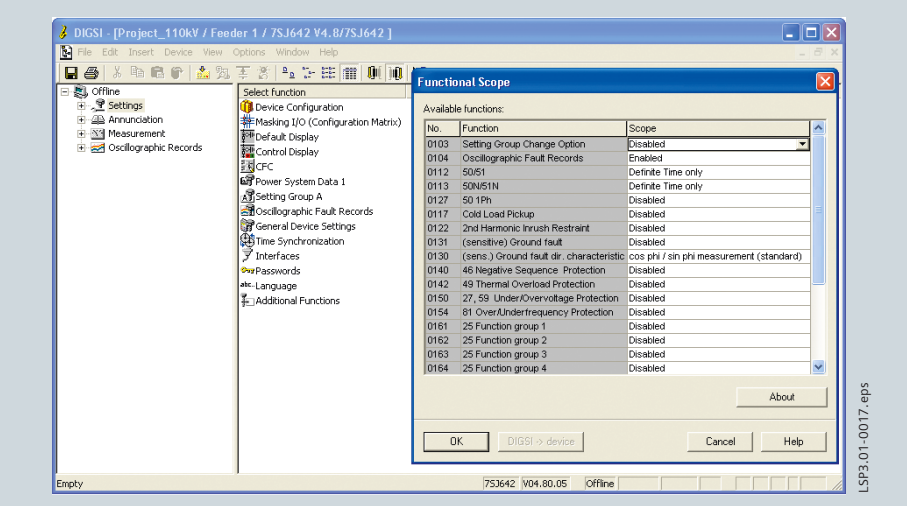

Fig. 2/13 DIGSI 4, main menu, selection of protection functions

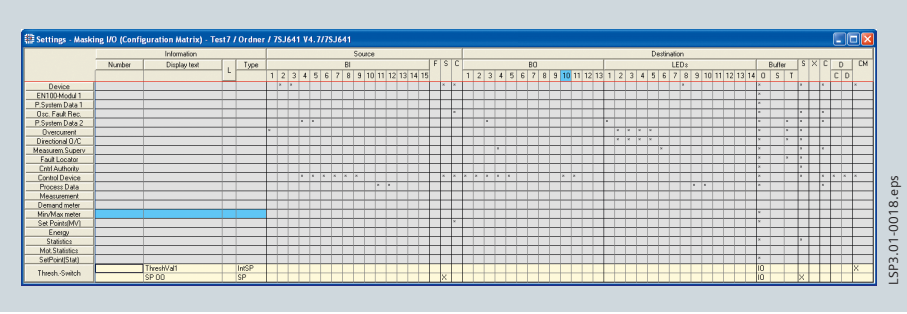

Fig. 2/14 DIGSI 4, assignment matrix

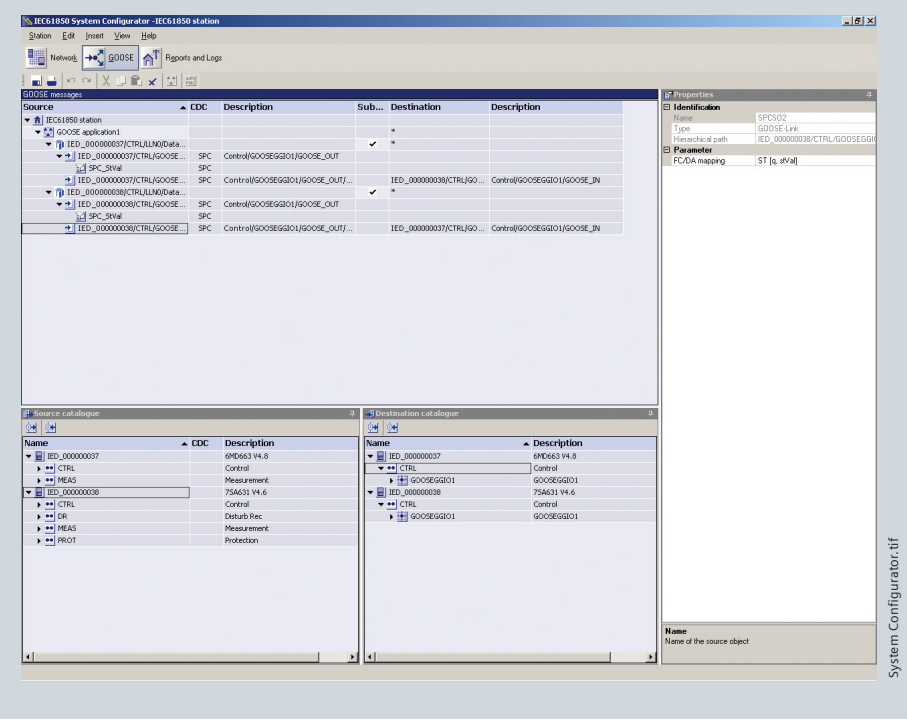

Fig. 2/15 DIGSI 4, IEC 61850 system configurator

CFC: Projecting the logic instead of programming

With the CFC (continuous function chart), it is possible to link and derive information without software knowledge by simply drawing technical processes, interlocks and operating sequences.

Logical elements such as AND, OR, timers, etc., as well as limit value requests of measured values are available (Fig. 2/16).

Commissioning

Special attention has been paid to commissioning. All binary inputs and outputs can be set and read out in targeted way. Thus, a very simple wiring test is possible. Messages can be sent to the serial interface deliberately for test purposes.

SIGRA 4, powerful analysis of all protection fault records

It is of crucial importance after a line fault that the fault is quickly and fully analyzed so that the proper measures can be immediately derived from the evaluation of the cause. As a result, the original line condition can be quickly restored and the downtime reduced to an absolute minimum. It is possible with SIGRA 4 to display records from digital protection units and fault recorders in various views and measure them, as required, depending on the relevant task.

FASE and FAST: Convenient engineering and test tool for Feeder Automation Applications

FASE is a standalone engineering tool to create easy and flexible feeder automation applications with 7SC80 feeder protection devices. By using predefined standard or customized DIGSI parameter set files, engineers can use defined templates to create the MV topology graphically via drag&drop.

FASE offers as well an editable table with most relevant protection and communication settings of all SIPROTEC 7SC80 devices at a glance.

Within FASE you can create flexible sequences step by step for several applications with the graphical user interface.

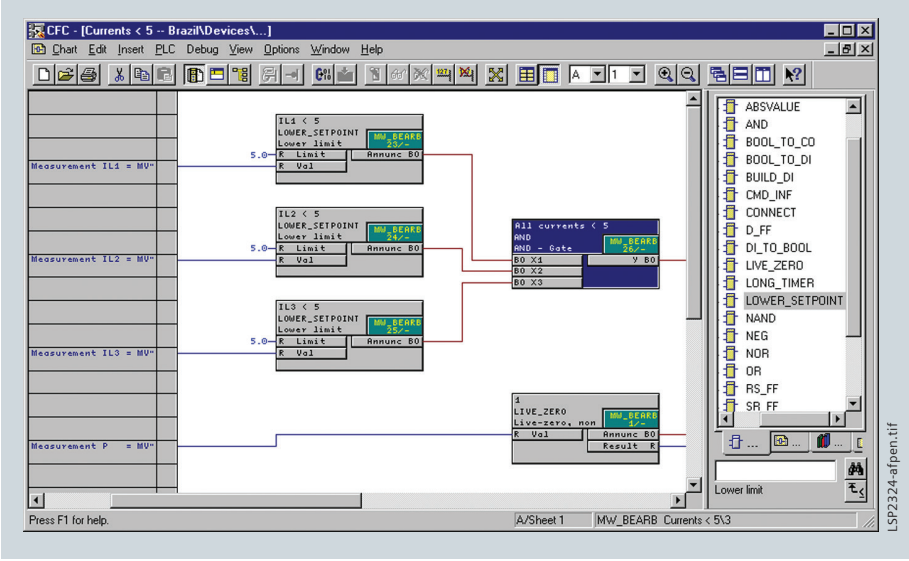

Fig. 2/16 CFC plan

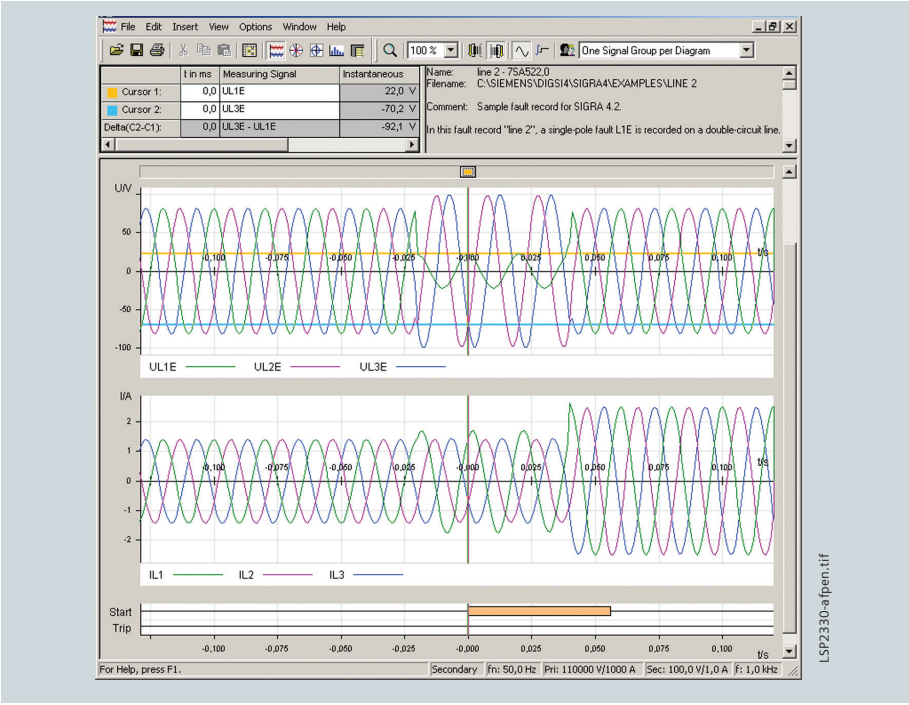

Fig. 2/17 Typical time-signal representation

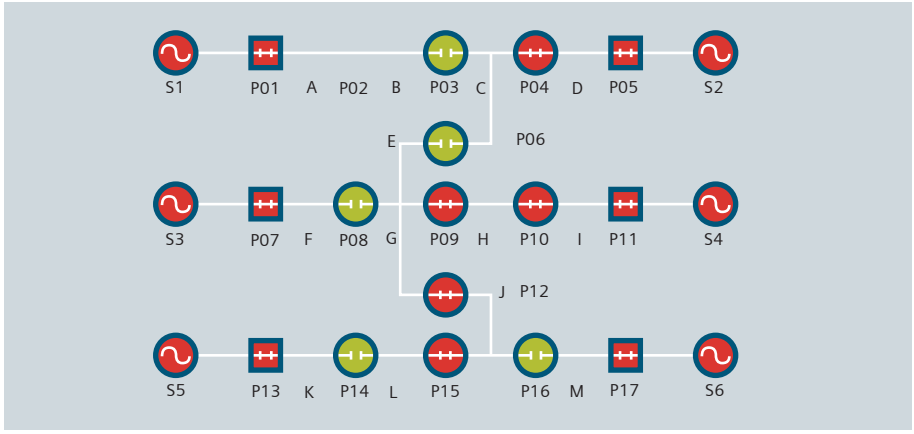

Bild 2/18 Fase configuration

Communication

As regards communication, the devices offer high flexibility for the connection to industrial and energy automation standards. The concept of the communication modules running the protocols enables exchangeability and retrofittability. Thus, the devices can also be perfectly adjusted to a changing communication infrastructure in the future, e.g., when Ethernet networks will be increasingly used in the utilities sector in the years to come.

USB interface

There is a USB interface on the front of the relay. All the relay functions can be parameterized on PC by using DIGSI-programs. Commissioning tools and fault analysis are built into the DIGSI program and are used through this interface.

Interfaces

A number of communication modules suitable for various applications can be fitted at the bottom of the housing. The modules can be easily replaced by the user. The interface modules support the following applications:

- **System/service interface**

Communication with a central control system takes place through this interface. Radial or ring type station bus topologies can be configured depending on the chosen interface. Furthermore, the units can exchange data through this interface via Ethernet and the IEC 61850 protocol and can also be accessed using DIGSI. Alternatively, up to 2 external temperature detection devices with max. 12 metering sensors can be connected to the system/service interface.

- **Ethernet interface**

The Ethernet interface has been designed for quick access to several protection devices via DIGSI. In the case of the motor protection 7SK80, it is possible to connect max. 2 external temperature detection devices with max. 12 metering sensors to the Ethernet interface. As for the line differential protection, the optical interface is located at this interface.

System interface protocols (retrofittable)

- **IEC 61850**

The ethernet-based protocol IEC 61850 is established as a worldwide standard for protection and systems control. SIPROTEC devices work as IEC 61850 servers and, via the protocol, they can exchange extensive data with up to 6 clients (e.g. SICAM PAS or SICAM TM1703) which are defined in logical nodes in the IEC 61850 Standard for protection and systems control functions. Static and dynamic reports are supported. Additionally, fault records can be transmitted which are stored in the binary Comtrade format in the device. Switching commands can be executed in the controlling direction. Data can be transmitted within few milliseconds between devices via GOOSE messages of the IEC 61850. This efficient intercommunication between devices replaces the former parallel wiring through communication connections via the ethernet network.

IEC 61850 is supported in Edition 1 and Edition 2 and the devices are certified independently in compliance with IEC 61850 Part 10.

The time synchronization can be made redundantly via two SNTP timers which are integrated in the IEC 61850 engineering.

In addition to the IEC 61850 protocol, further protocols are available on the ethernet module. They can be activated and deactivated through DIGSI 4 so that safety requirements are fulfilled. The devices can be accessed completely with DIGSI 4 via the ethernet network with the ethernet module. Diagnostic pages of the module can be accessed via a browser, e.g. for supporting the commissioning. The device can be integrated into a network monitoring system via SNMP V2 which allows monitoring permanently the behavior of the device in the network. The network redundancy protocols RSTP and HSR which are integrated on the ethernet module permit the construction of economical ring structures. Interruption-free redundancy can be achieved via parallel networks with PRP.

- **IEC 60870-5-103**

The IEC 60870-5-103 protocol is an international standard for the transmission of protective data and fault recordings. All messages from the unit and also control commands can be transferred by means of published, Siemens-specific extensions to the protocol.
Optionally, a redundant IEC 60870-5-103 module is available. This redundant module allows to read and change individual parameters.

- **IEC 60870-5-104**

The IEC 60870-5-104 substation and power system automation protocol is supported via the electrical and optical Ethernet module. Indications (single and double), measured values, metered values can be transmitted to one or two (redundant) masters. IEC 104 file transfer is also supported and fault recordings can be read out of the device in Comtrade format. In the command direction, secured switching of switching objects is possible via the protocol. Time synchronization can be supported via the IEC 60870-5-104 master or via SNTP across the network. Redundant time servers are supported. All auxiliary services on Ethernet such as the DIGSI 5 protocol, network redundancy, or SNMP for network monitoring can be activated concurrently with IEC 60870-5-104. Moreover, GOOSE messages of IEC 61850 can be exchanged between devices.

- **PROFIBUS-DP**

PROFIBUS-DP is a widespread protocol in industrial automation. Through PROFIBUS-DP, SIPROTEC units make their information available to a SIMATIC controller or receive commands from a central SIMATIC controller or PLC. Measured values can also be transferred to a PLC master.

- **MODBUS RTU**

This simple, serial protocol is mainly used in industry and by power utilities, and is supported by a number of relay manufacturers. SIPROTEC units function as MODBUS slaves, making their information available to a master or receiving information from it. A time-stamped event list is available.

- **DNP 3.0 protocol**

Power utilities use the serial DNP 3.0 (Distributed Network Protocol) for the station and network control levels. SIPROTEC units function as DNP slaves, supplying their information to a master system or receiving information from it.

- **DNP3 TCP**

The ethernet-based TCP variant of the DNP3 protocol is supported with the electrical and optical ethernet module. Two DNP3 TCP clients are supported.

Redundant ring structures can be realized for DNP3 TCP with the help of the integrated switch in the module. For instance, a redundant optical ethernet ring can be constructed. Single-point indications, double-point indications, measured and metered values can be configured with DIGSI 4 and are transmitted to the DNPi client. Switching commands can be executed in the controlling direction. Fault records of the device are stored in the binary Comtrade format and can be retrieved via the DNP 3 file transfer. The time synchronization is performed via the DNPi client or SNTP. The device can also be integrated into a network monitoring system via the SNMP V2 protocol.

Parallel to the DNP3 TCP protocol the IEC 61850 protocol (the device works as a server) and the GOOSE messages of the IEC 61850 are available for the intercommunication between devices.

- **PROFINET**

PROFINET is the ethernet-based successor of Profibus DP and is supported in the variant PROFINET IO. The protocol which is used in industry together with the SIMATIC systems control is realized on the optical and electrical Plus ethernet modules which are delivered from November 2012. All network redundancy procedures which are available for the ethernet modules, such as RSTP, PRP or HSR, are also available for PROFINET. The time synchronization is made via SNTP. The network monitoring is possible via SNMP V2 where special MIB files exist for PROFINET. The LLDP protocol of the device also supports the monitoring of the network topology. Single-point indications, double-point indications, measured and metered values can be transmitted cyclically in the monitoring direction via the protocol and can be selected by the user with DIGSI 4. Important events are also transmitted spontaneously via configurable process alarms. Switching commands can be executed by the system control via the device in the controlling direction.

The PROFINET implementation is certified.

The device also supports the IEC 61850 protocol as a server on the same ethernet module in addition to the PROFINET protocol. Client server connections are possible for the intercommunication between devices, e.g. for transmitting fault records and GOOSE messages.

- **Redundancy protocols for Ethernet (RSTP, PRP and HSR**

SIPROTEC Compact supports the redundancy protocols RSTP, PRP and HSR. These protocols can be loaded and activated easily via software on the existing optical Ethernet modules. PRP and HSR guarantee a redundant, uninterruptible and seamless data transfer in Ethernet networks without extensive parameter settings in the switches.

2

System solutions

IEC 60870

Devices with IEC 60870-5-103 interfaces can be connected to SICAM in parallel via the RS485 bus or radially via optical fiber. Via this interface, the system is open for connection of devices from other manufacturers.

Due to the standardized interfaces, SIPROTEC devices can also be integrated into systems from other manufacturers, or into a SIMATIC system. Electrical RS485 or optical interfaces are available. Optoelectronic converters enable the optimal selection of transmission physics. Thus, cubicle-internal wiring with the RS485 bus, as well as interference-free optical connection to the master can be implemented at low cost.

IEC 61850

An interoperable system solution is offered for IEC 61850 together with SICAM. Via the 100 MBit/s Ethernet bus, the devices are connected electrically or optically to the station PC with SICAM. The interface is standardized, thus enabling the direct connection of devices from other manufacturers to the Ethernet bus.

With IEC 61850, the devices can also be installed in systems of other manufacturers.

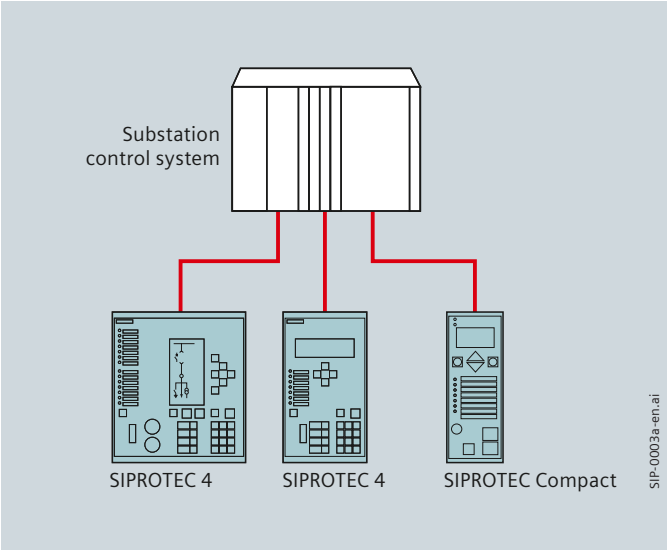

Fig. 2/19 IEC 60870-5-103: Radial fiber-optic connection

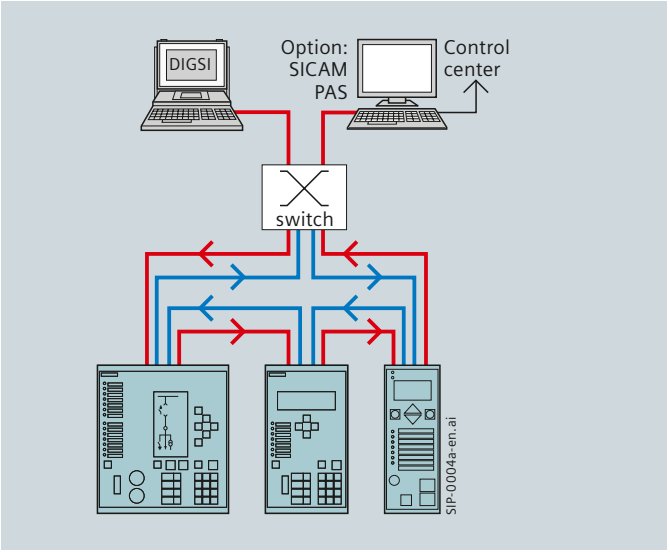

Fig. 2/20 Bus structure for station bus with Ethernet and IEC 61850, fiber-optic ring

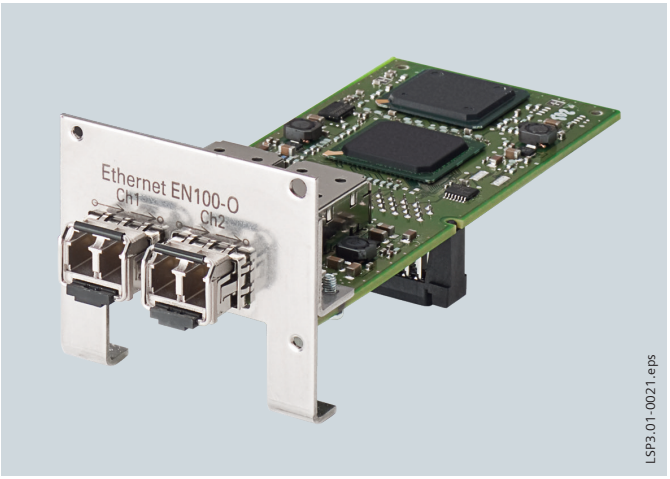

Fig. 2/21 Optical Ethernet communication module for IEC 61850

System solution (continued)

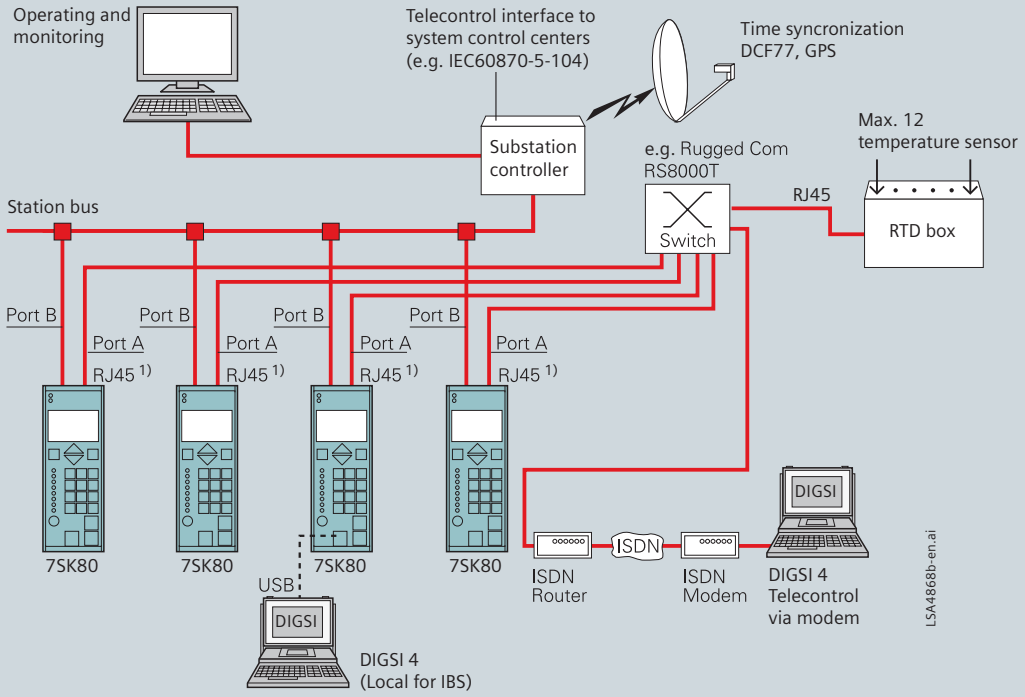

Fig. 2/22 System solution/communication

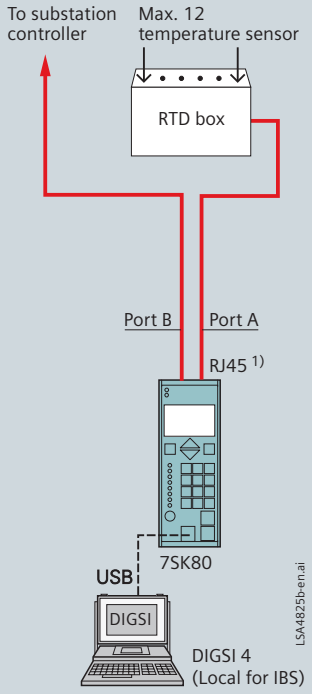

Fig. 2/23 Connection of an RTD box to 7SK80 using Ethernet interface

1) On SIPROTEC 7SK80, the RJ45 interface at port A can be used for connection of a thermo-box. On SIPROTEC 7SD80, port A is reserved for the optical interface.

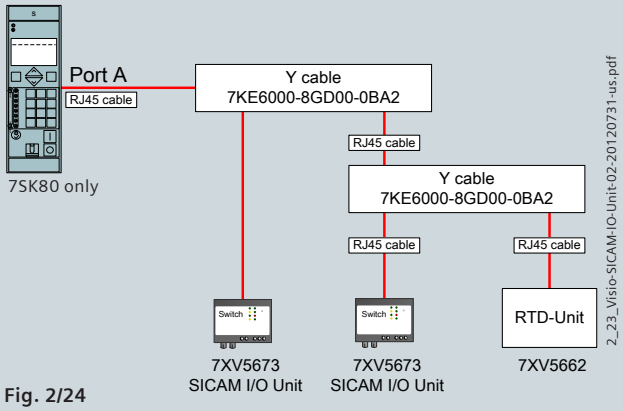

Fig. 2/24
Connection of 2 SICAM I/O Units and 1 RTD-box using Y cable (maximum 2 SICAM I/O-Units lockable)

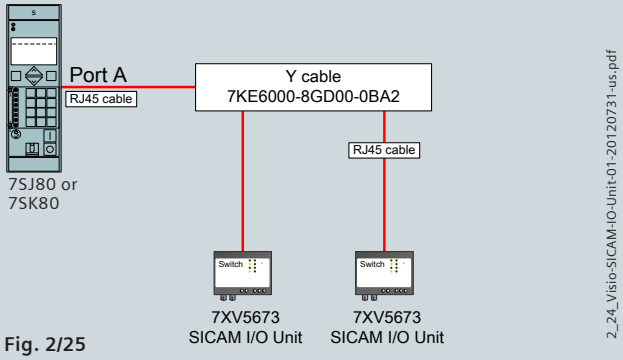

Fig. 2/25
Connection of 2 SICAM I/O Units on port A using Y cable (maximum 2 SICAM I/O-Units lockable)

SIEMENS



Line Differential Protection 7SD80
SIPROTEC Compact

Line Differential Protection SIPROTEC 7SD80

	Page
Description	3/3
Function overview	3/4
Applications	3/5
Application sheets	3/6
Application examples	3/9
Selection and ordering data	3/12
Connection diagrams	3/14
Connection examples	3/20

3

You will find a detailed overview of the technical data (extract of the manual) under:
http://www.siemens.com/siprotec

Description

The line differential protection SIPROTEC 7SD80 has been conceived for selective line protection of power cables and overhead lines up to 24km for all kind of starpoint configurations.

The implemented phase comparison algorithm is a fast and stable method for line protection in industry and distribution grids. The protection interface communication is carried out directly without external equipment over copper wires, optical fibers or both in redundancy. The wide scope of non directional and directional functions can be applied miscellaneously as emergency functions as well as backup functions. For instance the 7SD80 enables simplified and cost saving concepts for meshed grids and busbar protection by means of reverse interlocking. Fast and selective tripping is guaranteed even if the communication fails between the relays. The scope of functions includes protection functions as well as functions for control and monitoring. The interoperable connectivity to substation control systems is give by standard protocols like IEC61850. The general concept of redundance for protection and its communication gets completed by Ethernet redundancy protocols (PRP, HSR, RSTP) and thus increases the total system availability. Integrated functions for commissioning help and easy settings lead to short commissioning times.

Protection interface communication

Data exchange takes place via integrated interface in two-wire and fiber-optic respectively. By parallel use of both options communication redundancy is realised. Communication via the protection interface can further be used to send an intertripping command to the circuit-breaker at the opposite end, and to exchange at the same time up to 16 freely assignable binary signals between the SIPROTEC 7SD80 devices.

Highlights

- Pluggable current and voltage terminals
- Binary input thresholds settable using DIGSI (3 stages)
- Secondary current transformer values (1 A/5 A) settable using DIGSI
- 9 programmable function keys
- 6-line display
- Buffer battery exchangeable from the front
- USB front port
- 2 additional communication ports
- Integrated switch for low-cost and redundant optical Ethernet rings
- Ethernet redundancy protocols RSTP, PRP and HSR for highest availability
- Relay-to-relay communication through Ethernet with IEC 61850 GOOSE
- Millisecond-accurate time synchronization through Ethernet with SNTP.



Fig. 3/1 SIPROTEC 7SD80 front view



Fig. 3/2 SIPROTEC 7SD80 rear view

SIPROTEC 7SD80-specific features

- Short commissioning times by an easy parameterization and integrated commissioning help for protection and communication
- Integrated interfaces for exchanging differential protection data (fiber-optic up to 24 km/15 miles and/or two-wire copper cables up to 20 km/12 miles)
- Application for differential protection
- Integrated monitoring function of the protection interface, both in the commissioning phase and in running operation
- Integrated non-directional and directional time-overcurrent protection
- Transmission of a circuit-breaker intertripping signal and 16 further binary signals to the opposite end.

Function overview

Protection functions	IEC	ANSI No.	Comment
Differential protection, line	ΔI	87L	
$3I_0$ differential protection	$\Delta 3I_0$	87N L	
Ground-fault differential protection for systems with resonant or isolated neutral	ΔI_{EE}	87Ns L	Optional
Definite time-overcurrent protection with delay for phase	$I>$, $I>>$, $I>>>$	50 TD (3 stages)	
Definite time-overcurrent protection with delay for earth	$I_E>$, $I_E>>$, $I_E>>>$	50N TD (3 stages)	
Inverse time-overcurrent protection (phase)	I_P	51	
Inverse time-overcurrent protection (ground)	I_{EP}	51N	
Inrush current detection			
Circuit-breaker failure protection	LSVS	50BF	
Trip-circuit supervision	AKU	74TC	
Lockout		86	
Circuit-breaker intertripping scheme		85 DT	
External trip initiation			
Undervoltage/overvoltage protection	$V<$, $V>$	27/59	Optional
Underfrequency/overfrequency protection	$f<$, $f>$	81 U/O	Optional
Directional time-overcurrent protection (phase)	$I>$, $I>>$, I_P	67 (3 stages)	Optional
Directional time-overcurrent protection (ground)	$I_E>$, $I_E>>$, I_{PE}	67N (3 stages)	Optional
Automatic reclosing	ARE	79	Optional
Flexible protection functions for current, voltage, power, cosφ, frequency	Flex Funk		Partly optional
Thermal overload protection	I^2t	49	
Control functions			

Table 3/1 Function overview

Control functions / programmable logic

- Commands (e.g. for the control of circuit-breakers, disconnect switches, grounding switches, etc.) through:
  - keyboard
  - binary inputs
  - DIGSI 4
  - communication interface
- User-defined PLC logic with CFC (e.g. interlocking).

Monitoring functions

- Operational measured values V, I, f
- Energy metering values W_p, W_q
- Circuit-breaker wear monitoring
- Minimum and maximum values
- Trip circuit supervision
- Fast measuring voltage failure “fuse-failure-monitor”
- 8 oscillographic fault records.

Communication interface

- System interface
  - IEC 61850 Edition 1 and 2
  - IEC 60870-5-103
  - MODBUS RTU
  - DNP 3.0
  - PROFIBUS-DP
  - Ethernet redundancy protocols RSTP, PRP and HSR
- Service interface
  - USB front interface for DIGSI 4
  - RS232/RS485 (instead of the system interface)
- Protection interface
  - Fiber-optic connection and/or
  - Two-wire connection.

Hardware

- 4 current transformers
- 0/3 voltage transformers
- 3/5/7 binary inputs (thresholds configurable using software)
- 5/8 binary outputs (2 changeover)
- 1 life contact
- Pluggable current and voltage terminals.

The SIPROTEC 7SD80 is a numerical line differential protection relay, which in addition to its main function, the selective protection of overhead lines and cables, also covers control and monitoring tasks.

Line protection

SIPROTEC 7SD80 devices are suitable as selective line protection for application in high-voltage and medium-voltage systems of all types of neutral designs (solid, low-resistance or high-resistance earthed, isolated or compensated).

Apart from the main protection function, the line differential protection, SIPROTEC 7SD80 offers a lot of additional protection functions. These can be used in parallel as a backup protection function, or as an emergency function if the main protection function fails, and they complement the range of functions of 7SD80 for application in transmission lines.

Control

The integrated control function permits control of disconnect devices, grounding switches or circuit-breakers through the integrated operator panel, binary inputs, DIGSI 4 or the control or automation system (e.g. SICAM)

Programmable logic

The integrated logic characteristics (CFC) allow the user to add own functions for automation of switchgear (e.g. interlocking) or switching sequence. The user can also generate user-defined messages. This functionality can form the base to create extremely flexible transfer schemes.

Operational measured values

Extensive measured values (e.g. I, V), metered values (e.g.W_p,W_q) and limit values (e.g. for voltage, frequency) provide improved system management as well as simplification by the commissioning

As for the operational measured values, a special focus was placed on the measured values critical for differential protection. So, the attenuation values and the signal-to-noise ratio of the communication connection, for example, are acquired and indicated in addition to the measurement of the quality of the telegram exchange per time unit.

Particular attention was paid to making the commissioning of the differential protection easier and safer. In this context, the amplitude and angle of the currents and of the voltages, if applicable, are displayed additionally with reference to the local measuring variable. In this way, a possible incorrect connection (polarity reversal) of the current transformers can be detected and eliminated early enough.

Operational indication

Monitoring of operation is ensured and documented by storage of event logs, trip logs, fault records and statistics.

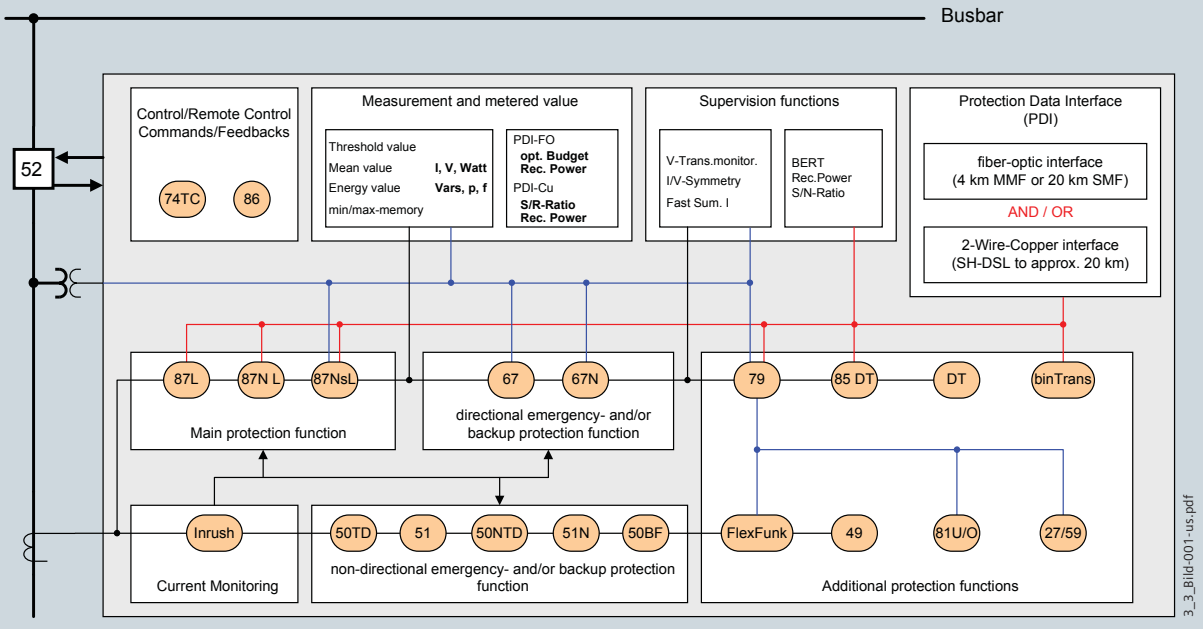

1) Not available if function package 'Q' (synchrocheck, ANSI 25) is selected.

Fig. 3/3 Function diagram

3

Protection functions

Differential protection (ANSI 87L, 87N L, 87Ns L)

The differential protection SIPROTEC 7SD80 consists of two separately operating differential protection algorithms:

- Phase comparison protection (PCP)
- Earth-fault differential protection (EFD).

The phase comparison protection, PCP, offers a safe and robust short-circuit protection for all types of neutral treatment. Of course, this is also valid for application in systems with isolated or resonant-earthed neutral. Adaptation of the phase comparison protection according to the neutral treatment is done by setting parameters via DIGSI.

The earth-fault differential protection, EFD, operates with two different algorithms, depending on the neutral treatment in the power system to be protected.

For application in solidly, low-resistance or high-resistance earthed systems, the EFD analyzes the measured zero-sequence current. The fundamental wave of the zero-sequence current is determined by filtering. The filtered zero-sequence currents of the local side and the opposite side are added and provide the zero-sequence differential current. The adaptive stabilizing facilitates the parameterization and assured stability and selectivity.

For application in power systems with isolated or resonant-earthed neutrals, the connection of voltages – at least of the zero-sequence voltage – and the use of a sensitive earth-current transformer is required. From the zero-sequence current and the voltage, the apparent power of the zero-sequence system is calculated, and compared with the opposite end. Depending on the direction of the power flow, an internal or external earth fault is detected. This is only indicated, and can be shut down immediately or with a set delay.

Circuit-breaker intertripping (ANSI 85 DT)

The 7SD80 devices have an integrated circuit-breaker intertripping function for tripping the circuit-breaker at the opposite end. The circuit-breaker intertripping can be activated directly by the differential protection functions, but also through binary signals of any other external or internal protection function. The circuit-breaker intertripping can be combined with an integrated phase and/or zero-sequence current threshold, which permits to trip the circuit-breaker if there is a sufficiently high current.

Overcurrent protection, non-directional/directional (ANSI 50, 50N, 51, 51N, 67, 67N)

This function is based on the phase-selective measurement of the three phase currents and the earth current (4 instrument transformers).

In the SIPROTEC 7SD80, three definite time-overcurrent protection stages are integrated for protection against phase faults, as well as for protection against earth faults. The current threshold and the delay time can be set for each stage. Furthermore, inverse time-overcurrent protection characteristics can be added.

Each of the overcurrent protection stages can be set as emergency or backup protection independently of each other. This enables the integration of the SIPROTEC 7SD80 in a simple busbar protection concept by means of reverse interlocking. When voltage transformers are connected, a directional time-overcurrent protection emergency function can be activated if the protection interface communication fails.

Available inverse-time characteristics

Characteristics acc. to	IEC 60255-3	ANSI/IEEE
Inverse	•	•
Short inverse		•
Long inverse	•	•
Moderately inverse		•
Very inverse	•	•
Extremely inverse	•	•

Tabelle 3/2 Available inverse-time characteristics

Inrush restraint

When the second harmonic is detected while energizing a transformer inside or outside of the protection zone, pickup of the differential protection stages or the overcurrent protection stages can be suppressed.

Breaker failure protection (ANSI 50BF)

If a faulted portion of the electrical circuit is not disconnected when a trip command is issued to a circuit-breaker, another trip command can be initiated using the breaker failure protection which trips the circuit-breaker of an upstream feeder.

Breaker failure is detected if, after a trip command is issued the current keeps on flowing into the faulted circuit. It is also possible to make use of the circuit-breaker position contacts for indication as opposed to the current flowing through the circuit-breaker.

External trip initiation

Through a binary input, an external protection device or monitoring equipment can be coupled into the signal processing of the SIPROTEC 7SD80 to trip the local circuit-breaker.

Trip circuit supervision (ANSI 74TC)

One or two binary inputs can be used for monitoring the circuit-breaker trip coil including its incoming cables. An alarm signal is generated whenever the circuit is interrupted.

Flexible protection functions

SIPROTEC 7SD80 enables the user to easily add up to 20 additional protective functions. Parameter definitions are used to link standard protection logic with any chosen characteristic quantity (measured or calculated quantity). The standard logic consists of the usual protection elements such as the pickup set point, the set delay time, the TRIP command, a block function, etc. The mode of operation for current, voltage, power and power factor quantities can be three-phase or phase-selective. Almost all quantities can be operated with ascending or descending pickup stages (e.g. under and over voltage). All stages operate with protection priority or speed.

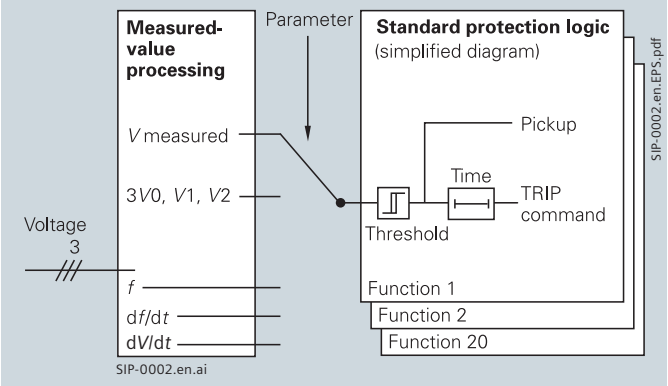

Fig. 3/4 Flexible protection functions

Lockout (ANSI 86)

All binary output statuses can be memorized. The LED reset key is used to reset the lockout state. The lockout state is also stored in the event of supply voltage failure. Reclosure can only occur after the lockout state is reset.

Thermal overload protection (ANSI 49)

To protect cables, an overload protection function with an integrated warning/alarm element for temperature and current can be used. The temperature is calculated using a thermal homogeneous body model (per IEC 60255-8), it considers the energy entering the equipment and the energy losses. The calculated temperature is constantly adjusted according to the calculated losses. The function considers loading history and fluctuations in load.

Overvoltage protection (ANSI 59)

The two-element overvoltage protection detects unwanted network and machine overvoltage conditions. The function can operate either with phase-to-phase, phase-to-ground, positive phase-sequence or negative phase-sequence voltage. Three-phase and single-phase connections are possible.

Undervoltage protection (ANSI 27)

The two-element undervoltage protection provides protection against dangerous voltage drops (especially for electric machines). Applications include the isolation of generators or motors from the network to avoid undesired operating conditions and a possible loss of stability. Proper operating conditions of electrical machines are best evaluated with the positive-sequence quantities. The protection function is active over a wide frequency range (± 10 % rated frequency). Even when falling below this frequency range the function continues to work, however, with decreased accuracy. The function can operate either with phase-to-phase, phase-to-ground or positive phase-sequence voltage, and can be monitored with a current criterion. Three-phase and single-phase connections are possible.

Frequency protection (ANSI 81O/U)

Frequency protection can be used for overfrequency and underfrequency protection. Electric machines and parts of the system are protected from unwanted frequency deviations. Unwanted frequency changes in the network can be detected and the load can be removed at a specified frequency setting. Frequency protection can be used over a wide frequency range (± 10 Hz rated frequency). There are four elements (individually set as overfrequency, underfrequency or OFF) and each element can be delayed separately. Blocking of the frequency protection can be performed by activating a binary input or by using an undervoltage element.

Customized functions (ANSI 32, 51V, 55 etc.)

Additional functions can be implemented using CFC or flexible protection functions. Typical functions include reverse power, voltage controlled overcurrent, phase angle detection, and zero-sequence voltage detection.

Fast current monitoring and further monitoring functions

SIPROTEC 7SD80 incorporates comprehensive monitoring func-tions for hardware and software. Monitoring comprises the measuring circuits, the analog-digital conversion, the protection data communication connection the internal supply voltages, the memories and the software sequence (watchdog).

Local measured values

The r.m.s. values are calculated from the acquired current and voltage along with the power factor as well as cos φ, frequency, active and reactive power. The following functions are available for measured value processing:

- Currents I_{L1}, I_{L2}, I_{L3}, I_N, I_{EE}
- Voltages V_{L1}, V_{L2}, V_{L3}, V_{12}, V_{23}, V_{31}
- Symmetrical components I_1, I_2, $3I_0$; V_1, V_2, $3V_0$
- Power Watts, Vars, VA/P, Q, S (P, Q: total and phase selective)
- Power factor cos φ (total and phase selective)
- Frequency
- Energy ± kWh, ± kVarh, forward and reverse power flow
- Operating hours counter
- Mean operating temperature of the overload function
- Limit value monitoring.

Limit values can be monitored using programmable logic in the CFC. Commands can be derived from this limit value indication. With each measured value a limit value is possible.

Zero suppression:

In a certain range of very low measured values, the value is set to zero to suppress interference.

Measured values of the opposite end

Every two seconds, the currents and voltages of the other end of the line are transmitted through the communication connection, and indicated in relation to the locally measured currents and voltages. The following measured values are available:

- Amplitude of currents I_{L1}, I_{L2}, I_{L3}
- Phase angle of currents φI_{L1}, φI_{L2}, φI_{L3}
- Amplitude of voltages V_{L1}, V_{L2}, V_{L3}
- Phase angle of voltages φV_{L1}, φV_{L2}, φV_{L3}.

Measured values of protection data communication

Extensive measured values serve for the monitoring of the quality and the availability of the used protection data communication connections. For the fiber-optic interface, the following measured values are available:

- Sending and receiving power of the optical communication module
- Optical damping of the fiber-optic cable
- Telegrams sent per second, minute and hour
- Sum of correct and incorrect telegrams received per second, minute and hour
- Availability of the protection interface.

For the two-wire interface, the following measured values are available:

- Damping of the copper cable
- Signal-to-noise ratio of the signal received
- Telegrams sent per second, minute and hour
- Sum of correct and incorrect telegrams received per second, minute and hour
- Availability of the protection interface.

Metered values

For internal metering, the unit can calculate an energy metered value from the measured current and voltage values. If an external meter with a metering pulse output is available, the SIPROTEC 7SD80 can obtain and process metering pulses through an indication input. The metered values can be displayed and passed on to a control center as an accumulated value with reset. A distinction is made between forward, reverse, active and reactive energy.

Radial feeder

The protection of a radial feeder with several substations via overcurrent-time protection leads to comparably high shutdown times at the point of infeed due to the necessary time grading. The stipulated fault clearance time may therefore not be attainable.

Here, using the line differential protection SIPROTEC 7SD80 is a simple remedy. This relay clears faults between the substations selectively and instantaneously, thus reducing the maximum fault clearance time of the radial feeder.

In the example shown, this is represented generally for the line between the infeed and substation A.

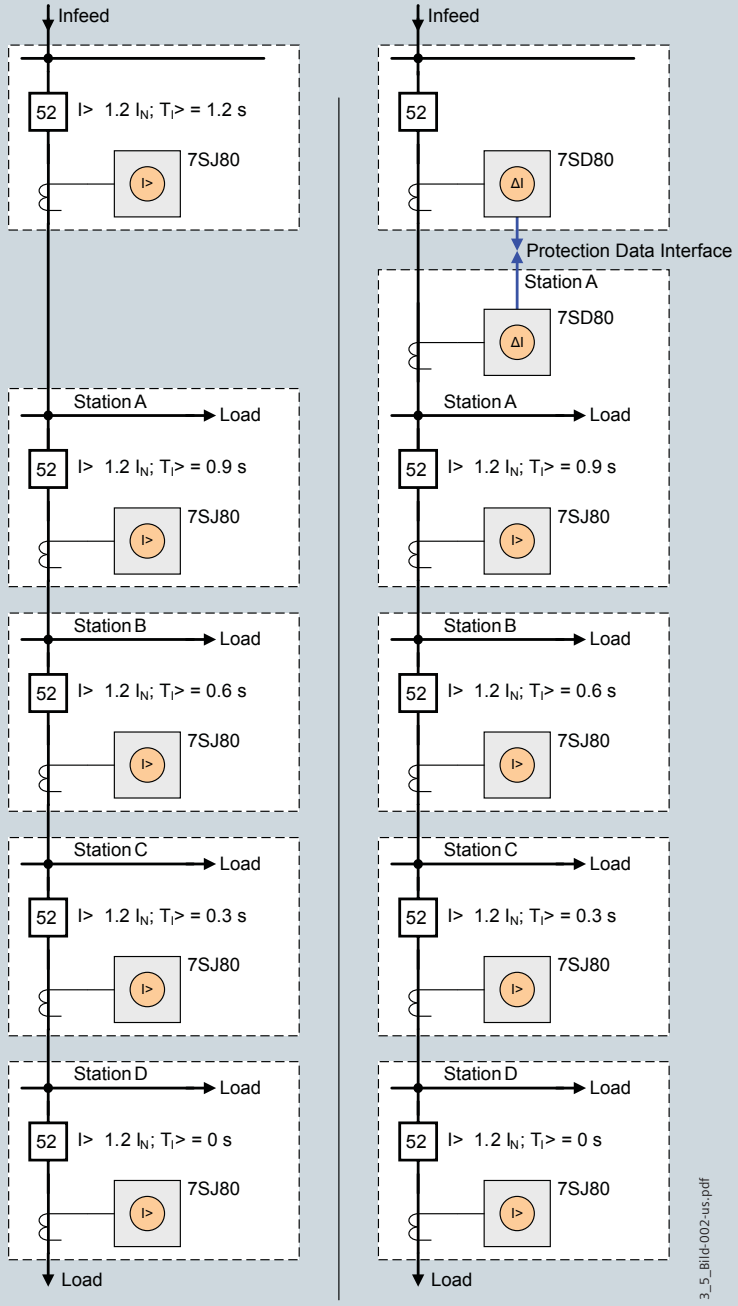

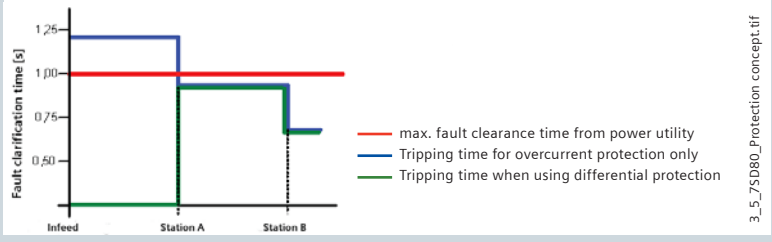

Fig. 3/5 Protection concept to reduce the shutdown times at the point of infeed of a radial feeder

Applications examples

Parallel feeder

Parallel feeders with bidirectional power flow can be ideally protected with the line differential protection SIPROTEC 7SD80.

As a difference to the alternative concept of the direction comparison protection, SIPROTEC 7SD80 does not require voltage transformers.

The communication connection required in each case only leads to instantaneous, strictly selective tripping when the differential protection is used

In addition, the shorter fault clearance time prevents damage to the generators at the opposite end.

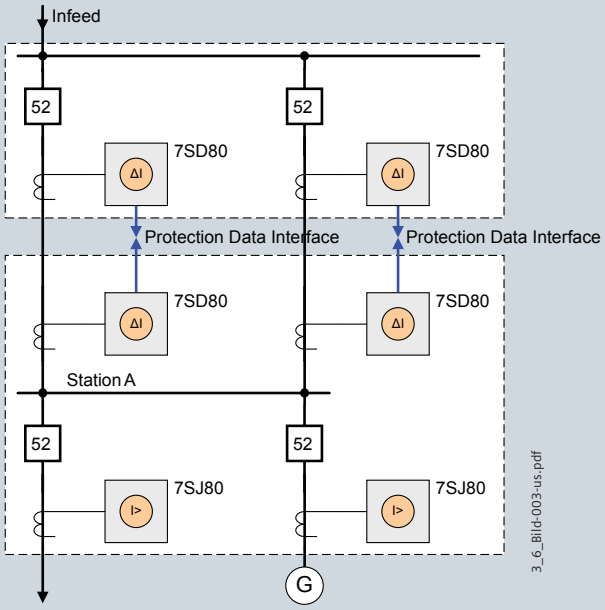

Bild 3/6 Protection of parallel feeders via SIPROTEC 7SD80

Ring feeder

The line differential protection SIPROTEC 7SD80 is ideally suited to protect ring feeders. Faults on the connection cables/lines of the ring are cleared strictly selectively and instantaneously. For this purpose, connection of the SIPROTEC 7SD80 devices to a current transformer is sufficient. For the main protection function of the SIPROTEC 7SD80, voltage transformers are not necessary. Even intermediate infeeds in the substations of the ring are completely covered by this protection concept.

Common alternative protection concepts are mostly based on the use of directional time-overcurrent protection, which on the other hand also requires voltage transformers in the substations. An inverse grading of these directional definite time-overcurrent protection devices, however, leads to long fault clearance times. The use of the definite time-overcurrent relays as direction comparison protection requires – like the differential protection – a communication connection between the protection devices at the ends of the corresponding ring segment, but this does not reach the fault clearance time of the differential protection.

The definite time-overcurrent protection integrated in SIPROTEC 7SD80 includes three stages, two thereof can also be used as directional definite time-overcurrent protection stages. The operating mode of each stage is settable. The stage can be activated permanently, or only if the differential protection function fails, e.g. if the communication connection fails. These definite-time stages allow to configure an integrated backup protection concept with the SIPROTEC 7SD80 relays in the ring-main panels. Moreover, a busbar protection system can also be implemented in the substations by means of a reverse interlocking.

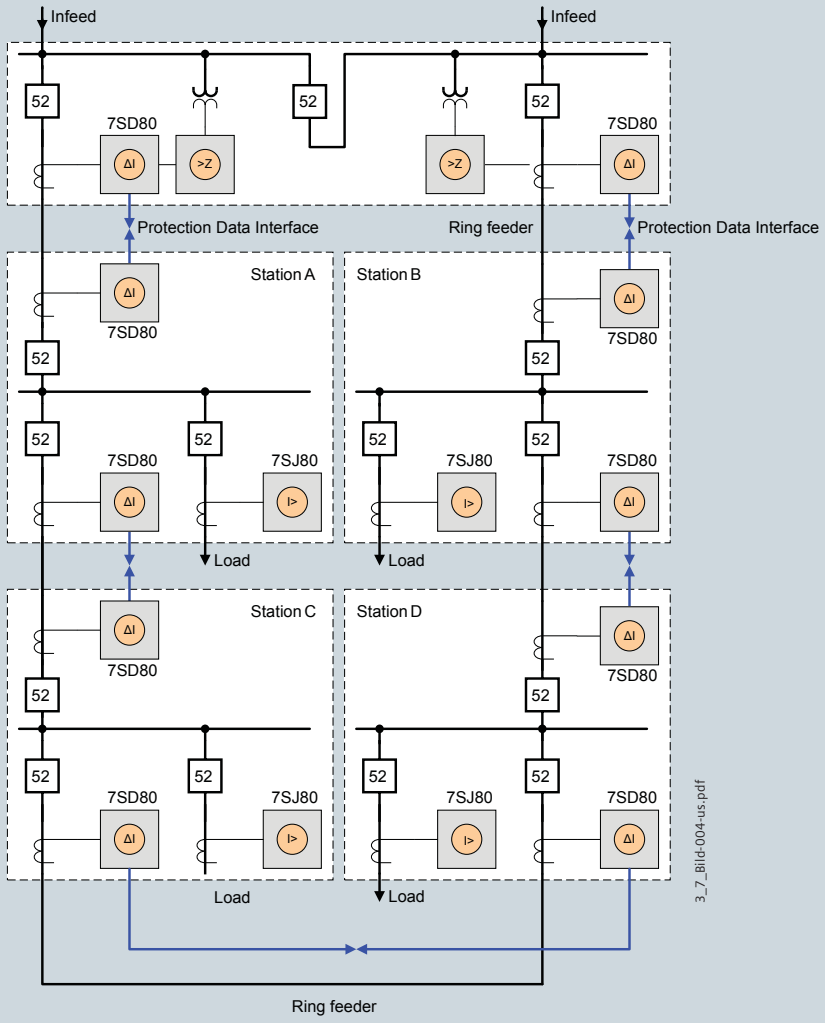

Bild 3/7 Protection concept for ring feeders via SIPROTEC 7SD80

Line Differential Protection SIPROTEC 7SD80

Selection and ordering data

Product description	Order No. 1 2 3 4 5 6 7 8 9 10 11 12 13 14 15 16 17 18 19 — 7SD80 □□-□□□□□□-□□□□+□□□	Short code
Housing 1/6 19", binary inputs and outputs, 1 life contact		
4 x *I*, 3 BI, 5 BO (Incl. 2 changeover/Form C), prot. data interface FO for mono- (24 km) and multimode (4 km), LC-duplex connector	1	
4 x *I*, 7 BI, 8 BO (Incl. 2 changeover/Form C), prot. data interface FO for mono- (24 km) and multimode (4 km), LC-duplex connector	2	
4 x *I*, 5 BI, 8 BO (Incl. 2 changeover/Form C), prot. data interface, 2 wires copper, twisted [3]	3	
4 x *I*, 3 x *V*, 3 BI, 5 BO (Incl. 2 changeover/Form C), prot. data interface FO for mono- (24 km) and multimode (4 km), LC-duplex connector	5	
4 x *I*, 3 x *V*, 7 BI, 8 BO (Incl. 2 changeover/Form C), prot. data interface FO for mono- (24 km) and multimode (4 km), LC-duplex connector	6	
4 x *I*, 3 x *V*, 5 BI, 8 BO (Incl. 2 changeover/Form C), prot. data interface, 2 wires copper twisted [3]	7	
Measuring inputs, default settings		
I_{ph} = 1 A/5 A, I_E = 1 A/5 A	1	
I_{ph} = 1 A/5 A, I_{EE} (sensitive) = 0.001 to 1.6 A/0.005 to 8 A	2	
Rated auxiliary voltage		
DC 24 V to 48 V	1	
DC 60 V to 250 V; AC 115 V; AC 230 V	5	
Unit version		
Surface mounting housing, screw-type terminal	B	
Flush mounting housing, screw-type terminal	E	
Region-specific default- and language settings		
Region DE, IEC, language German (Language selectable), standard face plate	A	
Region World, IEC/ANSI, language English (Language selectable), standard face plate	B	
Region US, ANSI, language US-English (Language selectable), US face plate	C	
Port B (at bottom of device)		
No port	0	
IEC 60870-5-103 or DIGSI 4/modem or time sync. port, electrical RS232	1	
IEC 60870-5-103 or DIGSI 4/modem or time sync. port, electrical RS485	2	
IEC 60870-5-103 or DIGSI 4/modem time sync. port, optical 820 nm, ST connectors	3	
Further protocols see supplement L		
PROFIBUS DP slave, electrical RS485	9	L 0 A
PROFIBUS DP slave, optical, double ring, ST connector	9	L 0 B
MODBUS, electrical RS485	9	L 0 D
MODBUS, optical 820 nm, ST connector	9	L 0 E
DNP 3.0, electrical RS485	9	L 0 G
DNP 3.0, optical 820 nm, ST connector	9	L 0 H
IEC 60870-5-103, redundant, electrical RS485, RJ45 connector	9	L 0 P
IEC 61850, 100 Mbit Ethernet, 2 electrical ports, RJ45 connector	9	L 0 R
IEC 61850, 100 Mbit Ethernet, 2 FO ports, LC-duplex connector	9	L 0 S
Port A (at bottom of device)		
No port [1]	0	
Redundant FO protection data interface to the 2 wire copper interface		
Protection data interface FO for mono- (24 km) and multimode (4 km), LC-duplex connector [2][3]	7	
Measuring / fault recording		
With fault recorder	1	
With fault recorder, average values, min/max values	3	

continued next page

1) The FO interface is equipped, if MLFB position 6 = **1**, **2**, **5** or **6**
2) Only if MLFB position 6 = **3** or **7**
3) By using 2-wire-protection interface a external isolating transformer should be used
– PCM-transformer 6 kV orderno. C53207-A406-D195-1
– PCM-transformer 20 kV order no. 7XR9516

A detailed overview of the technical data (extract of the manual) you will find under: http://www.siemens.com/siprotec

ANSI No.	Variants	Order No. 1 2 3 4 5 6 7 8 9 10 11 12 13 14 15 16 17 18 19	Short code
		7SD80□□-□□□□□-□□□□+□□□	
	Medium voltage differential protection device Basic version (contained in all options)	F	A [1]
87L/87N L	Line differential protection (phase comparison and $3I_0$ differential protection [1]) Inrush-current detection		
50 TD/51	Definite/inverse time-overcurrent protection phase $I>$, $I>>$, $I>>>$, I_p		
50N TD/51N	Definite/inverse time-overcurrent protection ground $I_E>$, $I_E>>$, $I_E>>>$, I_{Ep}		
49	Thermal overload protection		
74TC	Trip circuit supervision		
50BF	Circuit-breaker failure protection		
86	Lockout		
85 DT	Circuit-breaker intertripping function (trip of the remote circuit-breaker) External trip initiation Parameter changeover (parameter group change) Supervision functions Circuit-breaker test Control of circuit-breaker Flexible protection function current, voltage [2], cos φ [2], power [2], frequency [2]		
27/59	Under-/Overvoltage protection [2] $V<$, $V>$		
81 U/O	Under-/Overfrequency protection [2] $f<$, $f>$		
	Basic version included	F	B
67	Directional definite/inverse time-overcurrent protection, phase [3] $\angle(V,I)$ $I>$, $I>>$, I_p		
67N	Directional definite/inverse time-overcurrent protection ground [3] $\angle(V,I)$ $I_E>$, $I_E>>$, I_{Ep}		
	Basic version included	F	C
87Ns L	Ground-fault differential protection for isolated/resonance-earthed networks [3] [4]		
	Basic version included	F	E
67	Directional definite/inverse time-overcurrent protection, phase [3] $\angle(V,I)$ $I>$, $I>>$, I_p		
67N	Directional definite/inverse time-overcurrent protection, ground [3] $\angle(V,I)$ $I_E>$, $I_E>>$, I_{Ep}		
87Ns L	Ground-fault differential protection for isolated/resonance-earthed networks [3] [4]		
	Additional functions		
	Without		**0**
	Transmission of 16 binary signals via the protection data interface		**1**
79	With automatic reclosure function (AR)		**2**
79	Transmission of 16 binary signals via the protection data interface and With automatic reclosure function (AR)		**3**

1) MLFB position 7 = **1** required (I_{ph} = 1 A/5 A, I_E = 1 A/5 A)

2) Function available if MLFB position 6 = **5**, **6** or **7** (voltage transformer inputs)

3) MLFB position 6 = **5**, **6** or **7** required (voltage transformer inputs)

4) MLFB position 7 = **2** required (I_{ph} = 1 A/5 A, I_{EE} (sensitive) = 0.001 to 1.6 A/0.005 to 8 A)

Connection diagrams

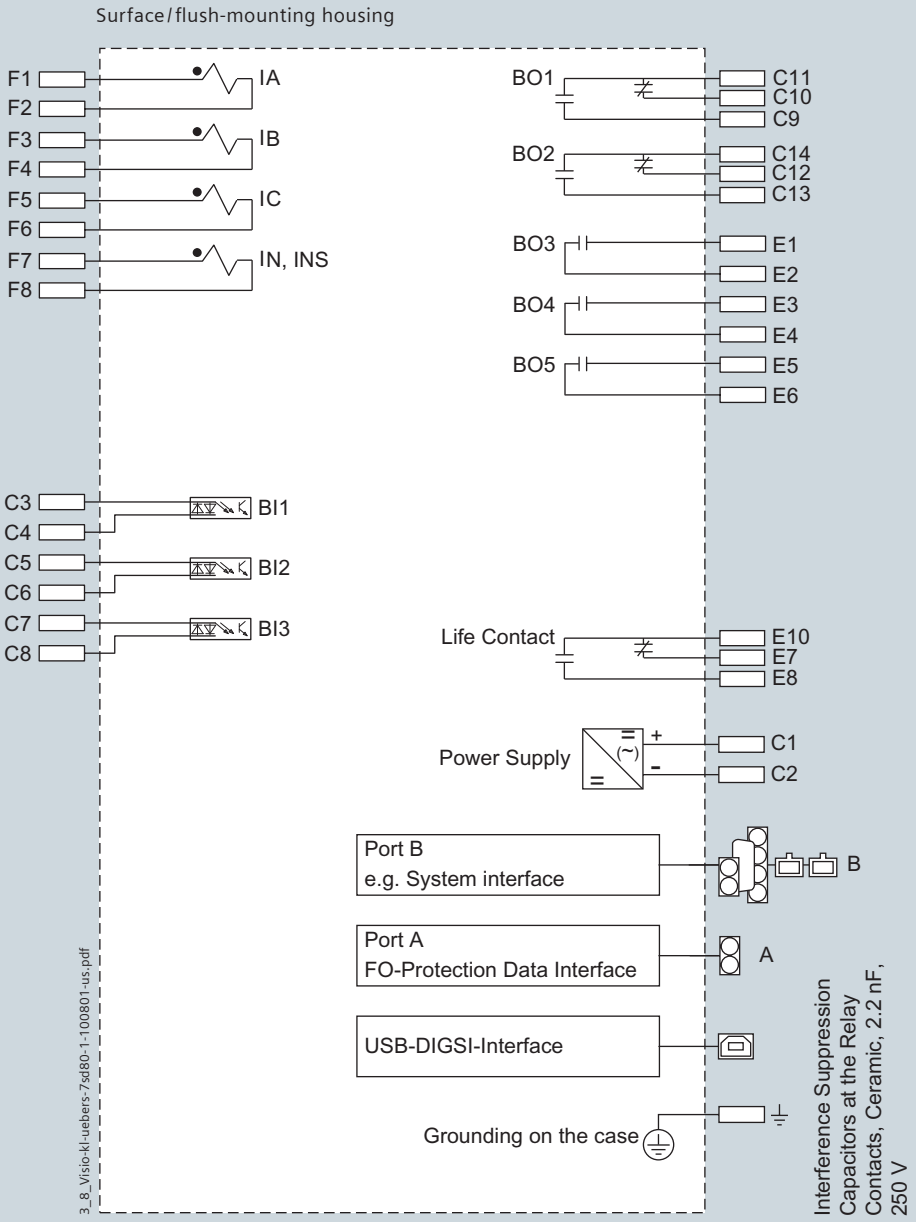

Bild 3/8 Line differential protection SIPROTEC 7SD801

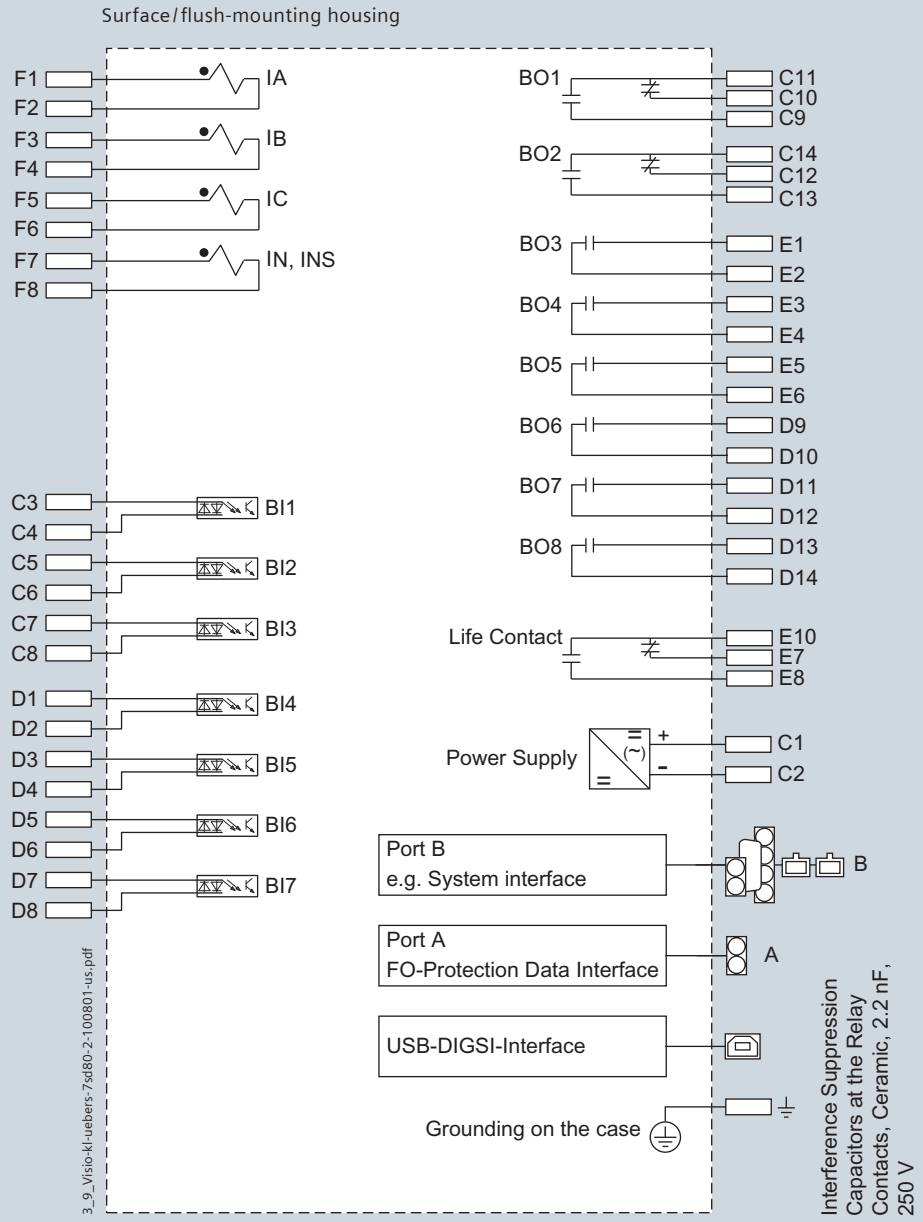

Bild 3/9 Line differential protection SIPROTEC 7SD802

Connection diagrams

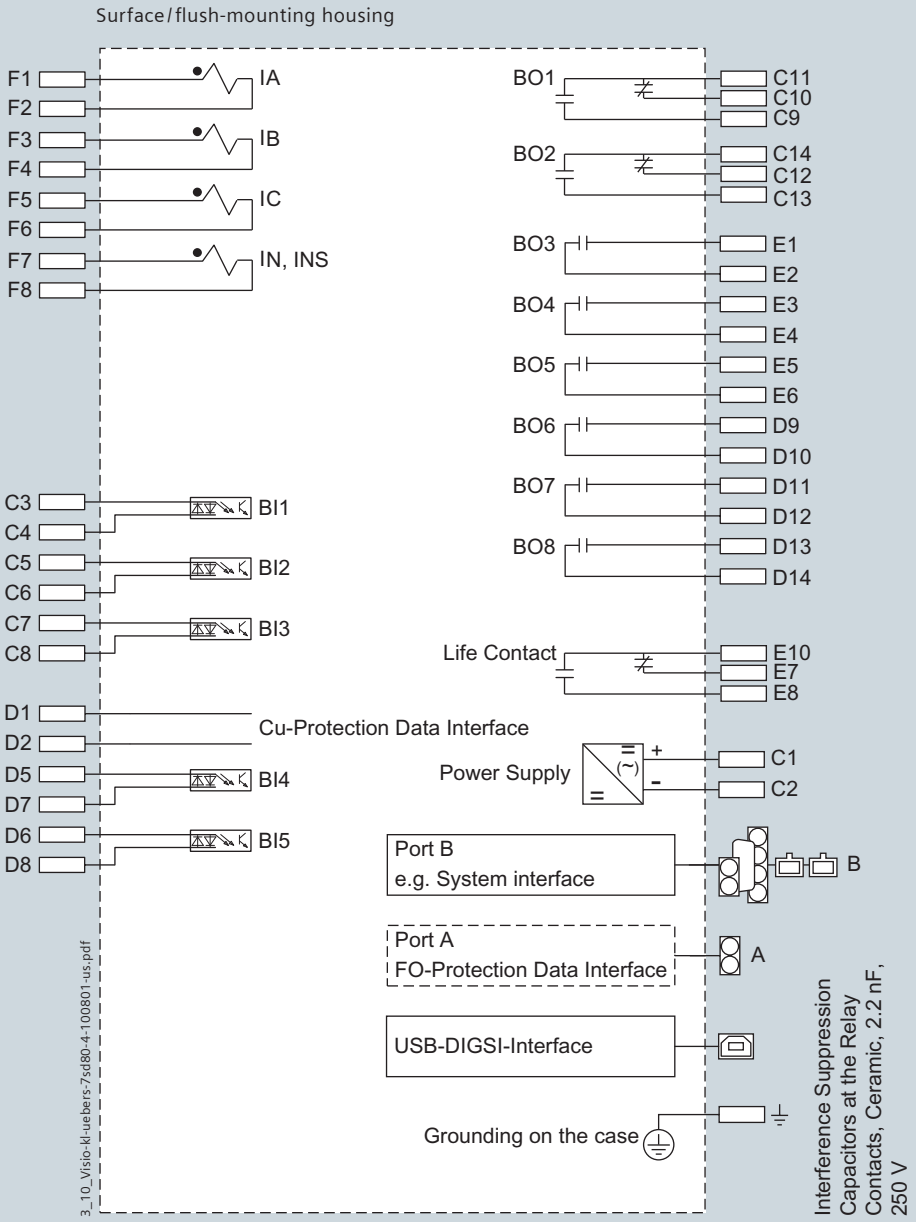

Bild 3/10 Line differential protection SIPROTEC 7SD803
The fiber-optic interface at port A is only available in connection with position 12 = 7

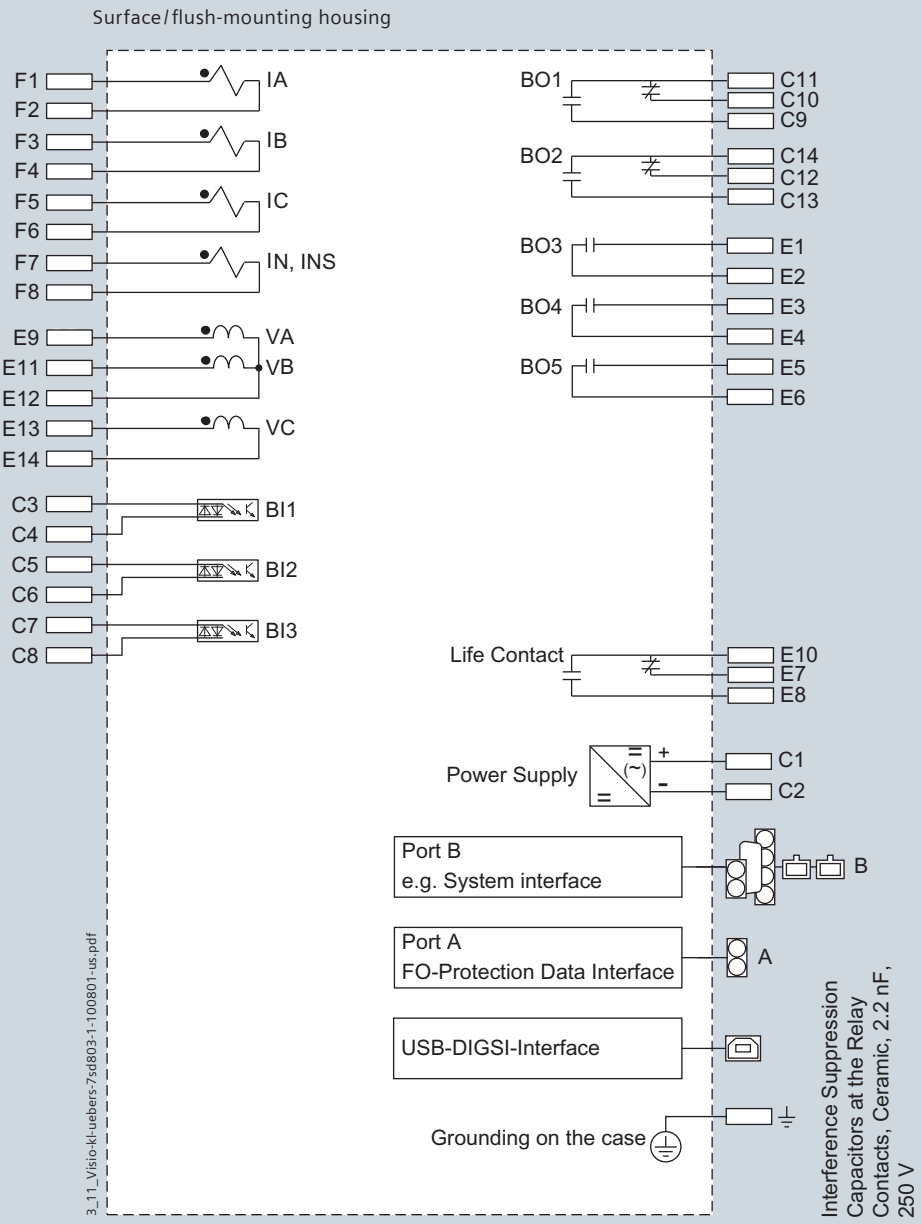

Bild 3/11 Line differential protection SIPROTEC 7SD805

Connection diagrams

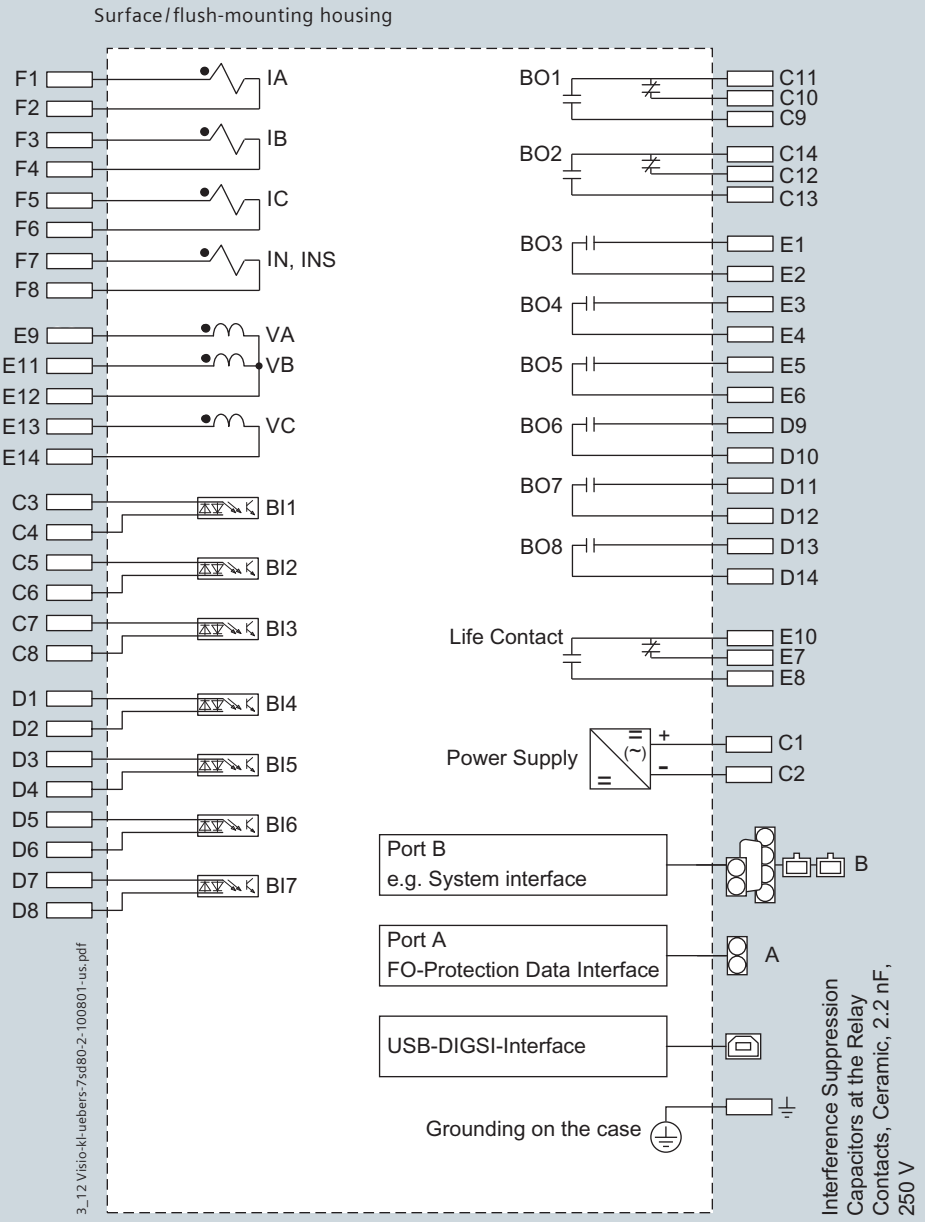

Bild 3/12 Line differential protection SIPROTEC 7SD806

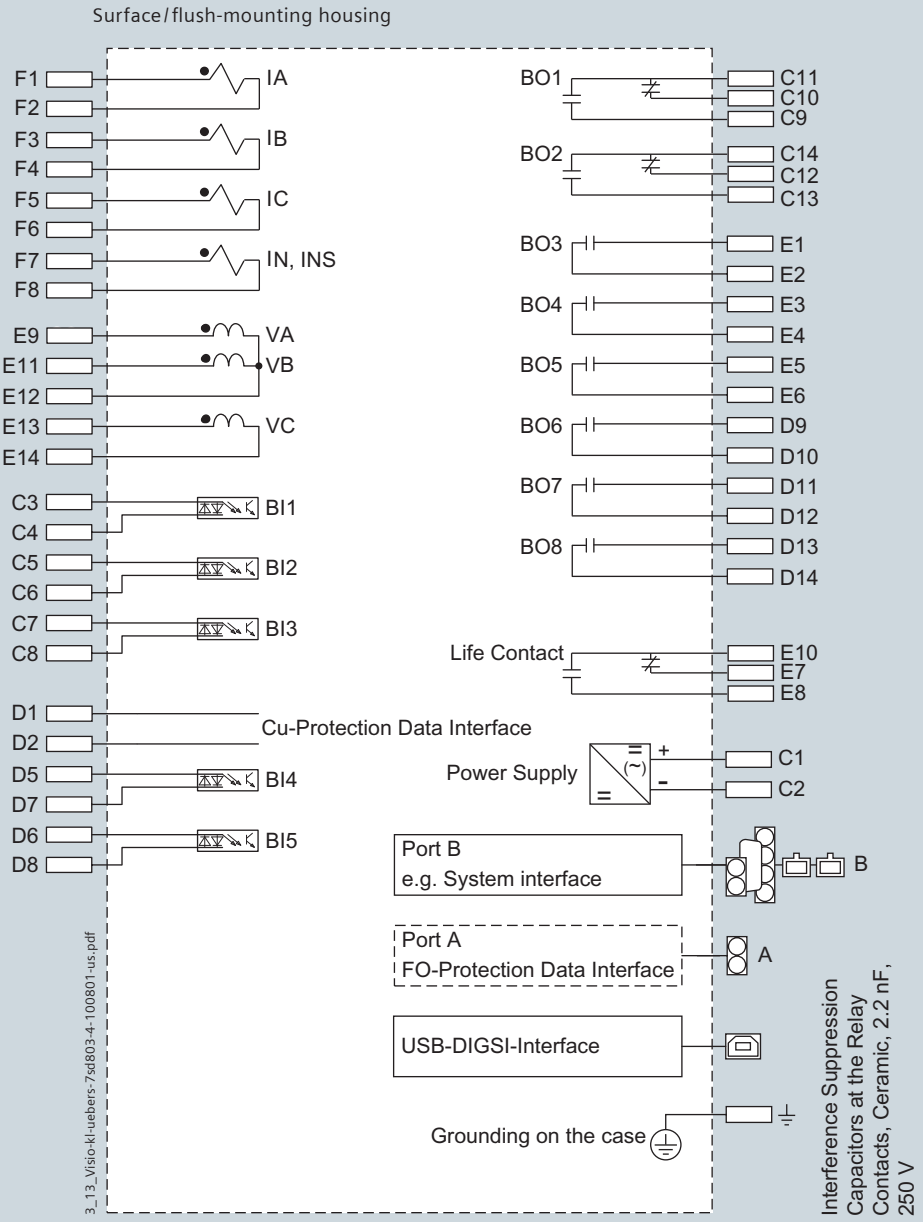

Bild 3/13 Line differential protection SIPROTEC 7SD807
The fiber-optic interface at port A is only available in connection with position 12 = 7

Connection examples

Current transformer connection

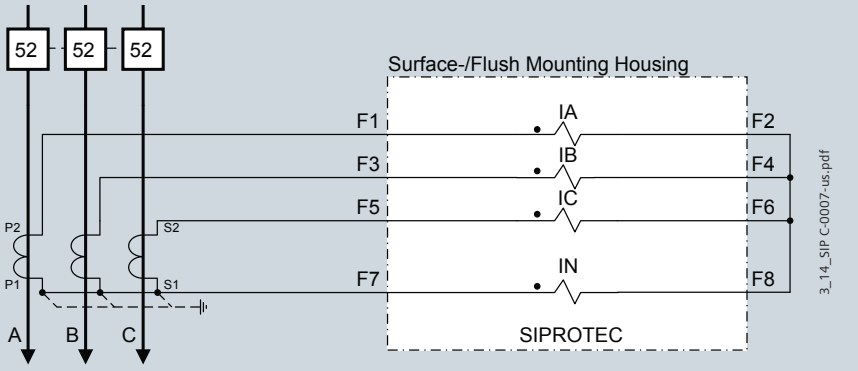

Fig. 3/14 Current transformer connections on three current transformers and neutral current (earth current) (Holmgreen circuit); normal circuit suitable for all solidly and impedance earthed systems (neutral towards line)

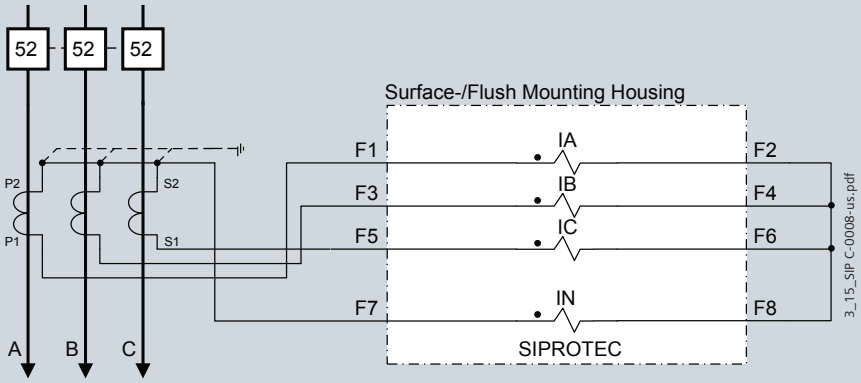

Fig. 3/15 Current transformer connections on three current transformers and neutral current (earth current) (Holmgreen circuit); normal circuit suitable for all solidly and impedance earthed systems (neutral towards busbar)

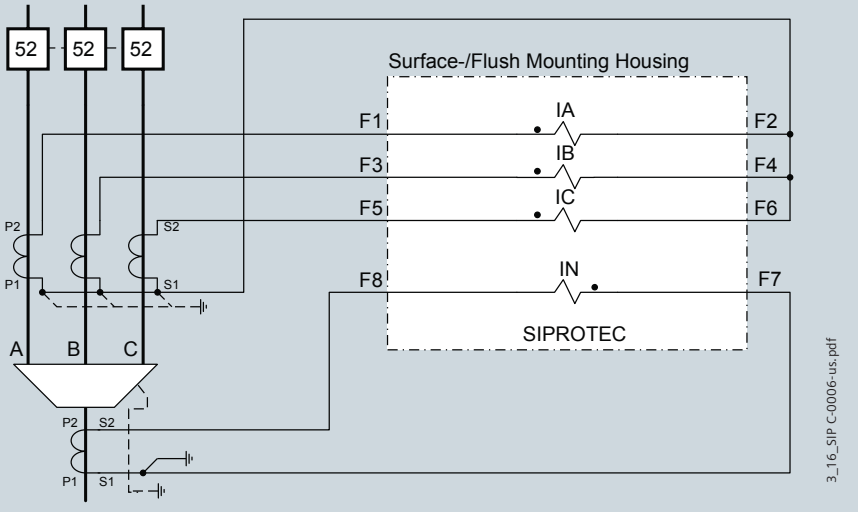

Fig. 3/16 Current transformer connections on three current transformers – earth current of additional summation current transformer, preferably for resonant-earthed and isolated systems.

Voltage transformer connection

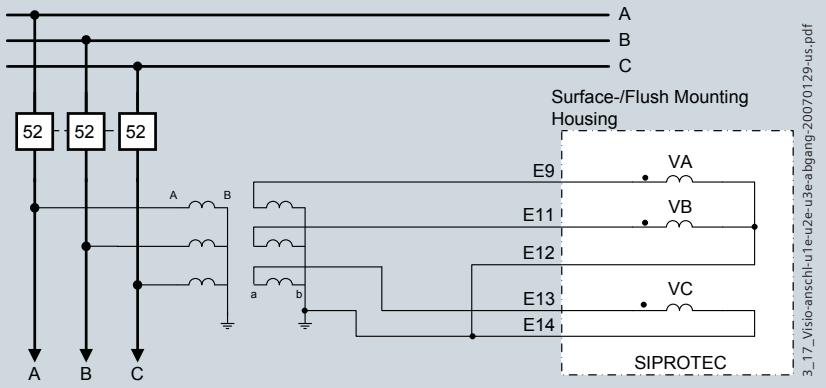

Fig. 3/17 Example for connection type "V_{1E}, V_{2E}, V_{3E}", feeder-side voltage connection

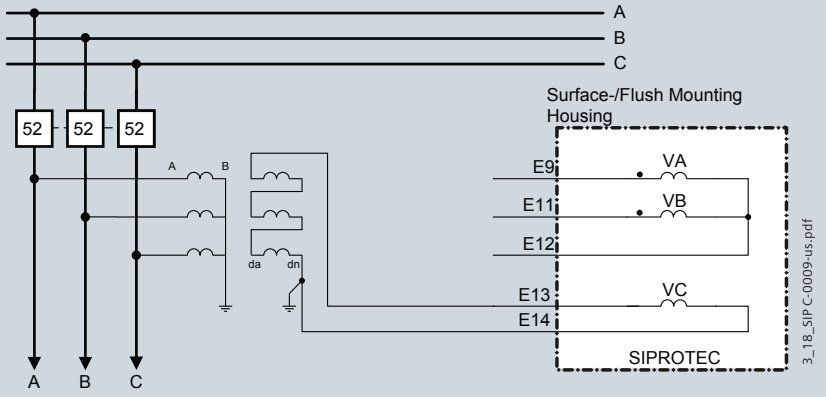

Fig. 3/18 Example for connection type "V_0 connection"

SIEMENS



Overcurrent Protection 7SJ80
SIPROTEC Compact

Overcurrent Protection SIPROTEC 7SJ80

	Page
Description	4/3
Function overview	4/4
Applications	4/5
Application sheets	4/6
Application examples	4/12
Selection and ordering data	4/18
Connection diagrams	4/21
Connection examples	4/27
Connection types	4/30

4

You will find a detailed overview of the technical data (extract of the manual) under:
http://www.siemens.com/siprotec

Description

The SIPROTEC 7SJ80 relays can be used for line/feeder protection of high and medium-voltage networks with grounded, low-resistance grounded, isolated or a compensated neutral point. The relays have all the required functions to be applied as a backup relay to a transformer differential relay.

The SIPROTEC 7SJ80 features “flexible protection functions”. Up to 20 additional protection functions can be created by the user.

Therefore protection of change for frequency or reverse power protection can be realized, for example.

The relay provides circuit-breaker control, further switching devices and automation functions. The integrated programmable logic (CFC) allows the user to add own functions, e.g. for the automation of switchgear (interlocking). The user is also allowed to generate user-defined messages.

Highlights

- Pluggable current and voltage terminals
- Binary input thresholds settable using DIGSI (3 stages)
- Secondary current transformer values (1 A / 5 A) settable using DIGSI
- 9 programmable function keys
- 6-line display
- Buffer battery exchangeable from the front
- USB front port
- 2 additional communication ports
- Integrated switch for low-cost and redundant optical Ethernet rings
- Ethernet redundancy protocols RSTP, PRP and HSR for highest availability
- Relay-to-relay communication through Ethernet with IEC 61850 GOOSE
- Millisecond-accurate time synchronization through Ethernet with SNTP (over Port A or Port B)
- Number of binary inputs and inary outputs by connection from up to two SICAM I/O-Units extendable.



Fig. 4/1 SIPROTEC 7SJ80 front view, housing



Fig. 4/2 SIPROTEC 7SJ80 rear view

Overcurrent Protection SIPROTEC 7SJ80

Function overview

Protection functions	IEC	ANSI No.
Definite and inverse time-overcurrent protection (phase/ground)	$I>$, I_p, I_{Np}	50, 50N; 51, 51N
Directional time-overcurrent protection phase	$I>$, $I>>$, $I>>>$, I_p	67
Directional time-overcurrent protection ground	$I_E>$, $I_E>>$, $I_E>>>$, I_{Ep}	67N [1]
Directional sensitive ground fault protection	$I_{EE}>$, $I_{EE}>>$, I_{EEp}	67Ns [1], 50Ns
Overvoltage protection, zero-sequence system	V_E, $V_0>$	59N [1]
High-impedance restricted ground-fault protection		87N
Inrush restraint		
Trip-ciruit supervision	TCS	74TC
Undercurrent monitoring	$I<$, P>	37
Overload protection	$\vartheta>$	49
Undervoltage/overvoltage protection	$V<$, $V>$	27/59
Overfrequency/underfrequency protection	$f<$, $f>$	81O/U
Circuit-breaker failure protection	CBFP	50BF
Undervoltage controlled reactive power protection	$Q>/V<$	27Q
Intermittent ground fault protection	Iie>	
Directional intermittent ground fault protection	Iie dir>	67Ns [1]
Voltage dependent inverse-time overcurrent protection		51V
Unbalanced-load protection	$I_2>$	46
Phase-sequence-voltage supervision	LA, LB, LC	47
Synchrocheck	Sync	25
Automatic reclosing	AR	79
Fault locator	FL	FL [1]
Lockout		86
Forward power supervision, reverse power protection	$P<>$, $Q<>$	32 [1]
Power factor	cos φ	55 [1]
Rate-of-frequency-change protection	df/dt	81R
Rate-of-voltage-change protection	dV/dt	27R, 59R

Table 4/1 Function overview

Control functions/programmable logic

- Commands for the ctrl. of CB, disconnect switches (isolators/isolating switches)
- Control through keyboard, binary inputs, DIGSI 4 or SCADA system
- User-defined PLC logic with CFC (e.g. interlocking).

Monitoring functions

- Operational measured values V, I, f
- Energy metering values W_p, W_q
- Circuit-breaker wear monitoring
- Minimum and maximum values
- Trip circuit supervision (74TC)
- Fuse failure monitor
- 8 oscillographic fault records.

Communication interfaces

- System/service interface
  - IEC 61850 Edition 1 and 2
  - IEC 60870-5-103 and IEC 60870-5-104
  - PROFIBUS-DP
  - DNP 3.0
  - MODBUS RTU
  - DNP3 TCP
  - PROFINET
  - Ethernet redundancy protocols RSTP, PRP and HSR
- Ethernet interface for DIGSI 4 and extension up to two SICAM I/O-Units 7XV5673
- USB front interface for DIGSI 4.

Hardware

- 4 current transformers
- 0/3 voltage transformers
- 3/7/11 binary inputs (thresholds configurable using software)
- 5/8 binary outputs (2 changeover/Form C contacts)
- 1 life contact
- Pluggable current and voltage terminals.

1) Not available if function package "Q" (synchrocheck, ANSI 25) is selected.

The SIPROTEC 7SJ80 perform control and monitoring functions and therefore provide the user with a cost-effective platform for power system management, that ensures reliable supply of electrical power to the customers. The ergonomic design makes control easy from the relay front panel. A large, easy-to-read display was a key design factor.

Control

The integrated control function permits control of disconnect devices, grounding switches or circuit-breakers through the integrated operator panel, binary inputs, DIGSI 4 or the control or automation system (e.g. SICAM)

Programmable logic

The integrated logic characteristics (CFC) allow the user to add own functions for automation of switchgear (e.g. interlocking) or switching sequence. The user can also generate user-defined messages. This functionality can form the base to create extremely flexible transfer schemes.

Operational measured value

Extensive measured values (e.g. I, V), metered values (e.g.W_p,W_q) and limit values (e.g. for voltage, frequency) provide improved system management.

Operational indication

Event logs, trip logs, fault records and statistics documents are stored in the relay to provide the user or operator with all the key data required to operate modern substations.

Line protection

The SIPROTEC 7SJ80 units can be used for line protection of high and medium-voltage networks with grounded, low-resistance grounded, isolated or a compensated neutral point.

Transformer protection

The relay provides all the functions for backup protection for transformer differential protection. The inrush suppression effectively prevents unwanted trips that can be caused by inrush currents. The high-impedance restricted ground-fault protection detects short-circuits and insulation faults on the transformer.

Backup protection

As a backup protection the SIPROTEC 7SJ80 devices are universally applicable.

Switchgear cubicles for high/medium voltage

All units are designed specifically to meet the requirements of high/medium-voltage applications. In general, no separate measuring instruments (e.g., for current, voltage, frequency, ...) or additional control components are necessary.

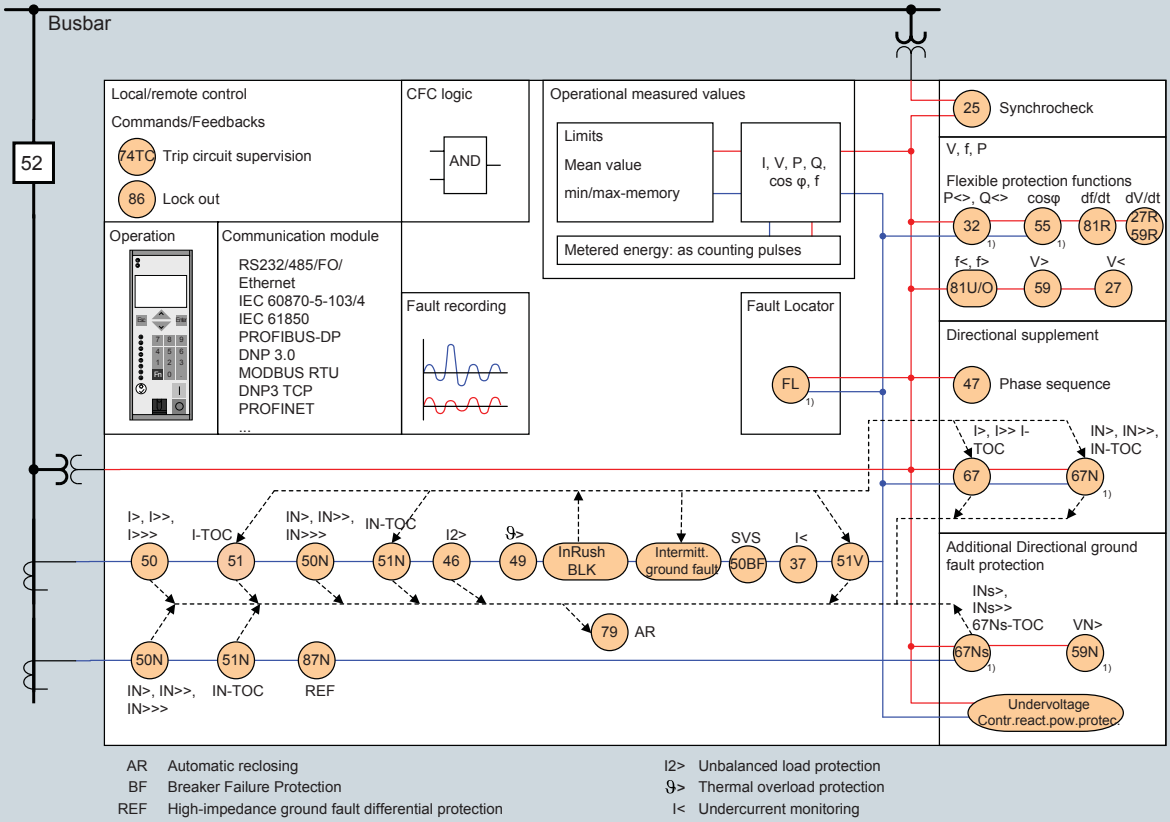

AR Automatic reclosing
BF Breaker Failure Protection
REF High-impedance ground fault differential protection
I2> Unbalanced load protection
ϑ> Thermal overload protection
I< Undercurrent monitoring

1) Not available if function package "Q" (synchrocheck, ANSI 25) is selected.

Fig. 4/3 Function diagram

4

Protection functions

Overcurrent protection (ANSI 50, 50N, 51, 51N, 51V)

This function is based on the phase selective measurement of the three phase currents and the ground current (four transformers). Three definite time-overcurrent protection elements (DMT) are available both for the phase and the ground elements. The current threshold and the delay time can be set in a wide range.

Inverse time-overcurrent protection characteristics (IDMTL) can also be selected and activated. The inverse-time function provides – as an option – voltage-restraint or voltage-controlled operating modes

Reset characteristics

Time coordination with electromechanical relays are made easy with the inclusion of the reset characteristics according to ANSI C37.112 and IEC 60255-3/BS 142 standards. When using the reset characteristic (disk emulation), the reset process is initiated after the fault current has disappeared. This reset process corresponds to the reverse movement of the Ferraris disk of an electromechanical relay (disk emulation).

Available inverse-time characteristics

Characteristics acc. to	IEC 60255-3	ANSI/IEEE
Inverse	•	•
Short inverse		•
Long inverse	•	•
Moderately inverse		•
Very inverse	•	•
Extremely inverse	•	•

Table 4/2 Available inverse-time characteristics

Inrush restraint

If second harmonic content is detected during the energization of a transformer, the pickup of stages $I>$,I_p, $I>_{dir}$ and $I_{p\ dir}$ is blocked.

Dynamic settings group switching

In addition to the static parameter changeover, the pickup thresholds and the tripping times for the directional and non-directional time-overcurrent protection functions can be changed over dynamically. As changeover criterion, the circuit-breaker position, the prepared auto-reclosure, or a binary input can be selected.

Directional comparison protection (cross-coupling)

It is used for selective instantaneous tripping of sections fed from two sources, i.e. without the disadvantage of time delays of the set characteristic. The directional comparison protection is suitable if the distances between the protection zones are not significant and pilot wires are available for signal transmission. In addition to the directional comparison protection, the directional coordinated time-overcurrent protection is used for complete selective backup protection.

Directional time-overcurrent protection (ANSI 67, 67N)

Directional phase and ground protection are separate functions. They operate in parallel to the non-directional overcurrent elements. Their pickup values and delay times can be set separately. Definite-time and inverse-time characteristics are offered. The tripping characteristic can be rotated by ± 180 degrees.

By making use of the voltage memory, the directionality can be determined reliably even for close-in (local) faults. If the primary switching device closes onto a fault and the voltage is too low to determine direction, the direction is determined using voltage from the memorized voltage. If no voltages are stored in the memory, tripping will be according to the set characteristic.

For ground protection, users can choose whether the direction is to be calculated using the zero-sequence or negative-sequence system quantities (selectable). If the zero-sequence voltage tends to be very low due to the zero-sequence impedance it will be better to use the negative-sequence quantities.

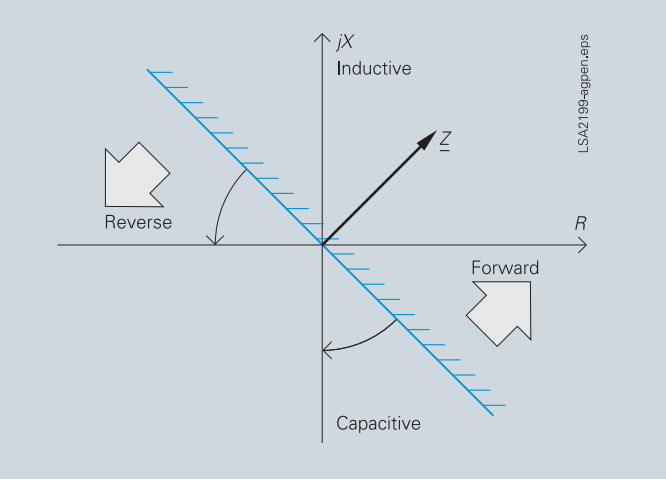

Fig. 4/4 Directional characteristics of the directional time-overcurrent protection

(Sensitive) directional ground-fault detection (ANSI 59N/64, 67Ns, 67N)

For isolated-neutral and compensated networks, the direction of power flow in the zero sequence is calculated from the zero-sequence current I_0 and zero-sequence voltage V_0. For networks with an isolated neutral, the reactive current component is evaluated; for compensated networks, the active current component or residual resistive current is evaluated. For special network conditions, e.g. high-resistance grounded networks with ohmic-capacitive ground-fault current or low-resistance grounded networks with ohmic-inductive current, the tripping characteristics can be rotated approximately ± 45 degrees (see Fig.4/5).

Two modes of ground-fault direction detection can be implemented: tripping or "signalling only mode".

(Sensitive) directional ground-fault detection (ANSI 59N, 67Ns, 67N) (contin.)

It has the following functions:

- TRIP via the displacement voltage V_E
- Two instantaneous elements or one instantaneous plus one user-defined characteristic
- Each element can be set to forward, reverse or non-directional
- The function can also be operated in the insensitive mode as an additional short-circuit protection.

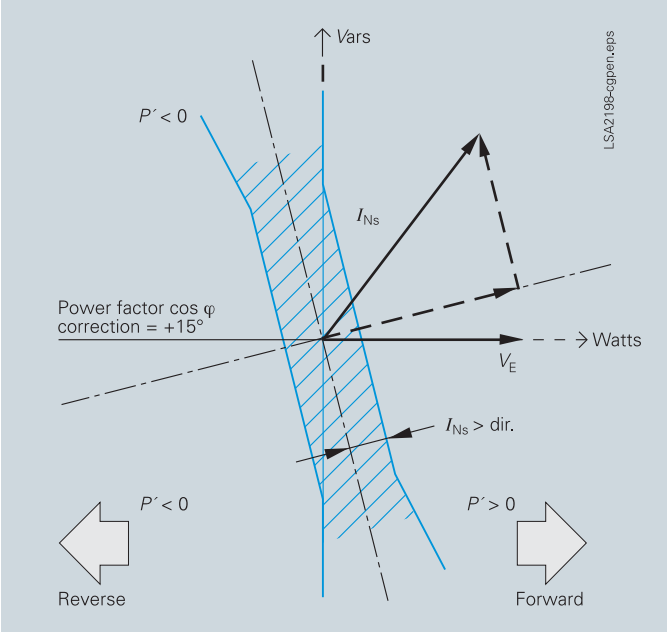

Fig. 4/5 Directional determination using cosine measurements for compensated networks

(Sensitive) ground-fault detection (ANSI 50Ns, 51Ns / 50N, 51N)

For high-resistance grounded networks, a sensitive input transformer is connected to a phase-balance neutral current transformer (also called core-balance CT). The function can also be operated in the normal mode as an additional short-circuit protection for neutral or residual ground protection.

Intermittent ground fault protection

Intermittent (re-igniting) faults are caused by poor cable insulation or water ingress into cable joints. After some time, the faults extinguish automatically or they develop into permanent short circuits. During the intermitting, neutral point resistances in impedance grounded systems can suffer thermal overload.

The normal ground fault protection is not capable of reliably detecting and clearing the sometimes very short current pulses. The required selectivity for intermittent ground faults is achieved by summing up the times of the individual pulses and tripping after a (programmable) summation time has been reached. The pickup threshold Iie> evaluates RMS values referred to 1 system period.

Negative-sequence system overcurrent protection (ANSI 46)

By measuring current on the high side of the transformer, the two-element phase-balance current/negative-sequence protection detects high-resistance phase-to-phase faults and phase-to-ground faults on the low side of a transformer (e.g. Dy 5). This function provides backup protection for high-resistance faults through the transformer.

Directional intermittent ground fault protection (ANSI 67Ns)

The directional intermittent ground fault protection has to detect intermittent ground faults in resonant grounded cable systems selectively. Intermittent ground faults in resonant grounded cable systems are usually characterized by the following properties:

– A very short high-current ground current pulse (up to several hundred amperes) with a duration of under 1 ms
– They are self-extinguishing and re-ignite within one half-period up to several periods, depending on the power system conditions and the fault characteristic.
– Over longer periods (many seconds to minutes), they can develop into static faults.

Such intermittent ground faults are frequently caused by weak insulation, e.g. due to decreased water resistance of old cables.

Ground fault functions based on fundamental component measured values are primarily designed to detect static ground faults and do not always behave correctly in case of intermittent ground faults. The function described here evaluates specifically the ground current pulses and puts them into relation with the zero-sequence voltage to determine the direction.

Undervoltage-controlled reactive power protection

The undervoltage-controlled reactive power protection protects the system for mains decoupling purposes. To prevent a voltage collapse in energy systems, the generating side, e.g. a generator, must be equipped with voltage and frequency protection devices. An undervoltage-controlled reactive power protection is required at the supply system connection point. It detects critical power system situations and ensures that the power generation facility is disconnected from the mains. Furthermore, it ensures that reconnection only takes place under stable power system conditions. The associated criteria can be parameterized.

Breaker failure protection (ANSI 50BF)

If a faulted portion of the electrical circuit is not disconnected when a trip command is issued to a circuit-breaker, another trip command can be initiated using the breaker failure protection which trips the circuit-breaker of an upstream feeder. Breaker failure is detected if, after a trip command is issued and the current keeps on flowing into the faulted circuit. It is also possible to make use of the circuit-breaker position contacts for indication as opposed to the current flowing through the circuit-breaker.

High-impedance restricted ground-fault protection (ANSI 87N)

The high-impedance measurement principle is a simple and sensitive method to detect ground faults, especially on transformers. It can also be used on motors, generators and reactors when they are operated on a grounded network.

When applying the high-impedance measurement principle, all current transformers in the protected area are connected in parallel and operated through one common resistor of relatively high *R*. The voltage is measured across this resistor (see Fig. 4/6).

The voltage is measured by detecting the current through the (external) resistor *R* at the sensitive current measurement input I_{EE}. The varistor *V* serves to limit the voltage in the event of an internal fault.

It limits the high instantaneous voltage spikes that can occur at current transformer saturation. At the same time, this results to smooth the voltage without any noteworthy reduction of the average value.

If no faults have occurred and in the event of external or through faults, the system is at equilibrium, and the voltage through the resistor is approximately zero. In the event of internal faults, an imbalance occurs which leads to a voltage and a current flowing through the resistor *R*.

The same type of current transformers must be used and must at least offer a separate core for the high-impedance restricted ground-fault protection. They must have the same transformation ratio and approximately an identical knee-point voltage. They should also have only minimal measuring errors.

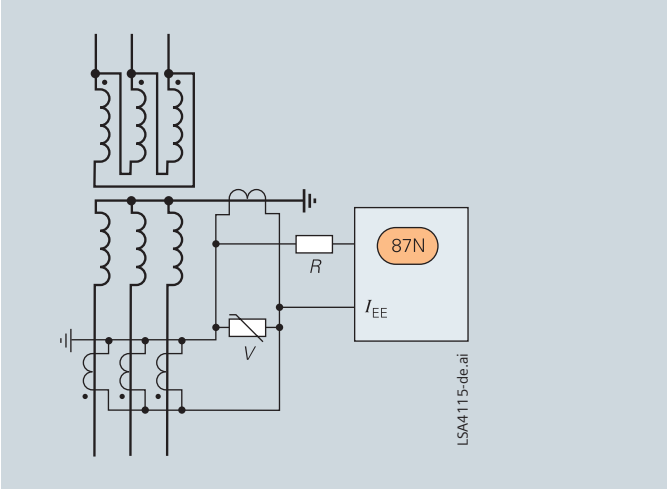

Fig. 4/6 High-impedance restricted ground-fault protection

Automatic reclosing (ANSI 79)

Multiple re-close cycles can be set by the user and lockout will occur if a fault is present after the last re-close cycle.

The following functions are available:

- 3-pole ARC for all types of faults
- Separate settings for phase and ground faults
- Multiple ARC, one rapid auto-reclosure (RAR) and up to nine delayed auto-reclosures (DAR)
- Initiation of the ARC is dependant on the trip command selected (e.g. $I_2>$, $I>>$, I_p, $I_{dir}>$)
- The ARC function can be blocked by activating a binary input
- The ARC can be initiated from external or by the PLC logic (CFC)
- The directional and non-directional elements can either be blocked or operated non-delayed depending on the auto-reclosure cycle
- If the ARC is not ready it is possible to perform a dynamic setting change of the directional and non-directional overcurrent elements.

Flexible protection functions

The SIPROTEC 7SJ80 enables the user to easily add up to 20 additional protection functions. Parameter definitions are used to link standard protection logic with any chosen characteristic quantity (measured or calculated quantity). The standard logic consists of the usual protection elements such as the pickup set point, the set delay time, the TRIP command, a block function, etc. The mode of operation for current, voltage, power and power factor quantities can be three-phase or single-phase. Almost all quantities can be operated with ascending or descending pickup stages (e.g. under and overvoltage). All stages operate with protection priority.

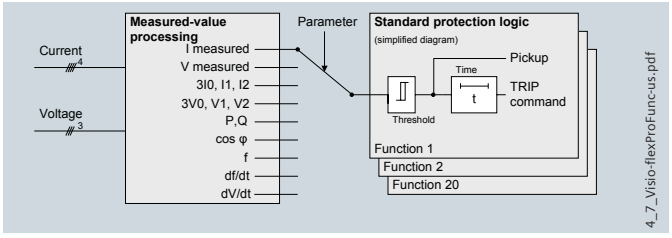

Fig. 4/7 Flexible protection functions

Protection functions/stages available are based on the available measured analog quantities:

Function	ANSI
$I>$, $I_E>$	50, 50N
$V<$, $V>$, $V_E>$	27, 59, 59N
$3I_0>$, $I_1>$, $I_2>$, $I_2/I_1>$, $3V_0>$, $V_1><$, $V_2><$	50N, 46, 59N, 47
$P><$, $Q><$	32
cos φ	55
$f><$	81O, 81U
$df/dt><$	81R
dV/dt	27R/59R

Table 4/3 Available flexible protection functions

For example, the following can be implemented:

- Reverse power protection (ANSI 32R)
- Rate-of-frequency-change protection (ANSI 81R)
- Rate-of-voltage-change protection (ANSI 27R/59R).

Synchrocheck, synchronizing function (ANSI 25)

When closing a circuit-breaker, the units can check whether two separate networks are synchronized. Voltage-, frequency- and phase-angle-differences are checked to determine whether synchronous conditions exist.

Trip circuit supervision (ANSI 74TC)

One or two binary inputs can be used for monitoring the circuit-breaker trip coil including its incoming cables. An alarm signal is generated whenever the circuit is interrupted.

Lockout (ANSI 86)

All binary output statuses can be memorized. The LED reset key is used to reset the lockout state. The lockout state is also stored in the event of supply voltage failure. Reclosure can only occur after the lockout state is reset.

Thermal overload protection (ANSI 49)

To protect cables and transformers, an overload protection function with an integrated warning/alarm element for temperature and current can be used. The temperature is calculated using a thermal homogeneous body model (per IEC 60255-8), it considers the energy entering the equipment and the energy losses. The calculated temperature is constantly adjusted according to the calculated losses. The function considers loading history and fluctuations in load.

Settable dropout delay times

If the relays are used in conjunction with electromechanical relays, in networks with intermittent faults, the long dropout times of the electromechanical relay (several hundred milliseconds) can lead to problems in terms of time coordination/grading. Proper time coordination/grading is only possible if the dropout or reset time is approximately the same. This is why the parameter for dropout or reset times can be defined for certain functions, such as overcurrent protection, ground short-circuit and phase-balance current protection.

Undercurrent monitoring (ANSI 37)

A sudden drop in current, which can occur due to a reduced load, is detected with this function. This may be due to shaft that breaks, no-load operation of pumps or fan failure.

Overvoltage protection (ANSI 59)

The two-element overvoltage protection detects unwanted network and machine overvoltage conditions. The function can operate either with phase-to-phase, phase-to-ground, positive phase-sequence or negative phase-sequence voltage. Three-phase and single-phase connections are possible.

Undervoltage protection (ANSI 27)

The two-element undervoltage protection provides protection against dangerous voltage drops (especially for electric machines). Applications include the isolation of generators or motors from the network to avoid undesired operating conditions and a possible loss of stability. Proper operating conditions of electrical machines are best evaluated with the positive-sequence quantities. The protection function is active over a wide frequency range (45 to 55, 55 to 65 Hz). Even when falling below this frequency range the function continues to work, however, with decrease accuracy. The function can operate either with phase-to-phase, phase-to-ground or positive phase-sequence voltage, and can be monitored with a current criterion. Three-phase and single-phase connections are possible.

Frequency protection (ANSI 81O/U)

Frequency protection can be used for overfrequency and underfrequency protection. Electric machines and parts of the system are protected from unwanted frequency deviations. Unwanted frequency changes in the network can be detected and the load can be removed at a specified frequency setting. Frequency protection can be used over a wide frequency range (40 to 60 (for 50 Hz), 50 to 70 (for 60 Hz)). There are four elements (individually set as overfrequency, underfrequency or OFF) and each element can be delayed separately. Blocking of the frequency protection can be performed by activating a binary input or by using an undervoltage element.

Fault locator (ANSI 21FL)

The integrated fault locator calculates the fault impedance and the distance to fault. The results are displayed in Ω, kilometers (miles) and in percent of the line length.

Customized functions (ANSI 51V, 55 etc.)

Additional functions, which are not time critical, can be implemented using the CFC measured values. Typical functions include reverse power, voltage controlled overcurrent, phase angle detection, and zero-sequence voltage detection.

4

Further functions

Measured values

The r.m.s. values are calculated from the acquired current and voltage along with the power factor, frequency, active and reactive power. The following functions are available for measured value processing:

- Currents I_{L1}, I_{L2}, I_{L3}, I_N, I_{EE}
- Voltages V_{L1}, V_{L2}, V_{L3}, V_{12}, V_{23}, V_{31}
- Symmetrical components I_1, I_2, $3I_0$; V_1, V_2, $3V_0$
- Power Watts, Vars, VA/P, Q, S (P, Q: total and phase selective)
- Power factor cos φ (total and phase selective)
- Frequency
- Energy ± kWh, ± kVarh, forward and reverse power flow
- Mean as well as minimum and maximum current and voltage values
- Operating hours counter
- Mean operating temperature of the overload function
- Limit value monitoring
  Limit values can be monitored using programmable logic in the CFC. Commands can be derived from this limit value indication.
- Zero suppression
  In a certain range of very low measured values, the value is set to zero to suppress interference.

Metered values

For internal metering, the unit can calculate an energy metered value from the measured current and voltage values. If an external meter with a metering pulse output is available, the SIPROTEC 7SJ80 can obtain and process metering pulses through an indication input. The metered values can be displayed and passed on to a control center as an accumulated value with reset. A distinction is made between forward, reverse, active and reactive energy.

Binary I/O extension with SICAM I/O-Unit 7XV5673

To extend binary inputs and binary outputs for SIPROTEC 7SJ80 up to two SICAM I/O-Units 7XV5673 can be added. Each SICAM I/O-Unit 7XV7653 is equipped with 6 binary inputs and 6 binary outputs and an Ethernet switch for cascading. The connection to the protection device can be either through the DIGSI Ethernet service interface Port A or through IEC 61850 GOOSE on Port B (System interface with EN100 module).

Circuit-breaker wear monitoring/ circuit-breaker remaining service life

Methods for determining circuit-breaker contact wear or the remaining service life of a circuit-breaker (CB) allow CB maintenance intervals to be aligned to their actual degree of wear. The benefit lies in reduced maintenance costs.

There is no exact mathematical method to calculate the wear or the remaining service life of a circuit-breaker that takes arc-chamber's physical conditions into account when the CB opens.

This is why various methods of determining CB wear have evolved which reflect the different operator philosophies. To do justice to these, the relay offers several methods:

- ΣI
- ΣI^x, with x = 1..3
- Σi^2t.

The devices also offer a new method for determining the remaining service life:

- Two-point method

The CB manufacturers double-logarithmic switching cycle diagram (see Fig. 4/8) and the breaking current at the time of contact opening serve as the basis for this method. After CB opening, the two-point method calculates the remaining number of possible switching cycles. Two points P1 and P2 only have to be set on the device. These are specified in the CB's technical data.

All of these methods are phase-selective and a limit value can be set in order to obtain an alarm if the actual value falls below or exceeds the limit value during determination of the remaining service life.

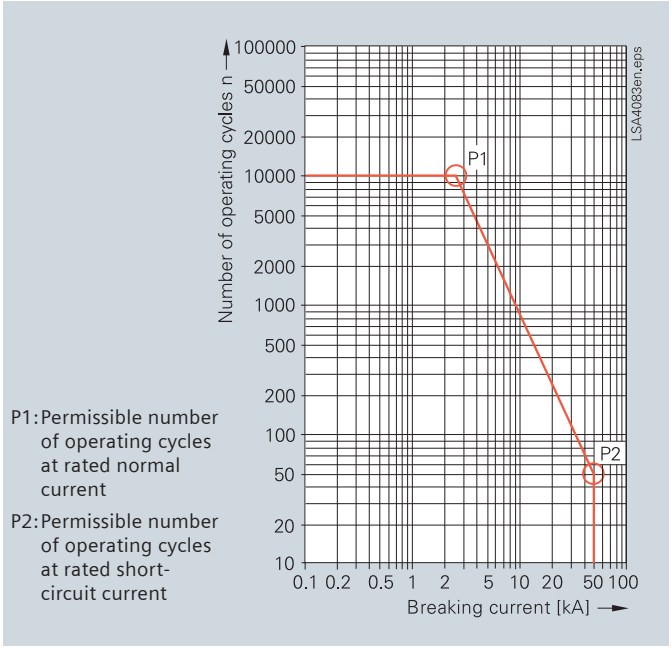

Fig. 4/8 Permissible number of operating cycles as a function of breaking current

Commissioning

Commissioning could not be easier and is supported by DIGSI 4. The status of the binary inputs can be read individually and the state of the binary outputs can be set individually. The operation of switching elements (circuit-breakers, disconnect devices) can be checked using the switching functions of the relay. The analog measured values are represented as wide-ranging operational measured values. To prevent transmission of information to the control center during maintenance, the communications can be disabled to prevent unnecessary data from being transmitted. During commissioning, all indications with test tag for test purposes can be connected to a control and protection system.

Test operation

During commissioning, all indications with test tag can be passed to a control system for test purposes.

Application examples

Radial systems

General hints:
The relay at the far end (D) from the infeed has the shortest tripping time. Relays further upstream have to be time-graded against downstream relays in steps of about 0.3 s.

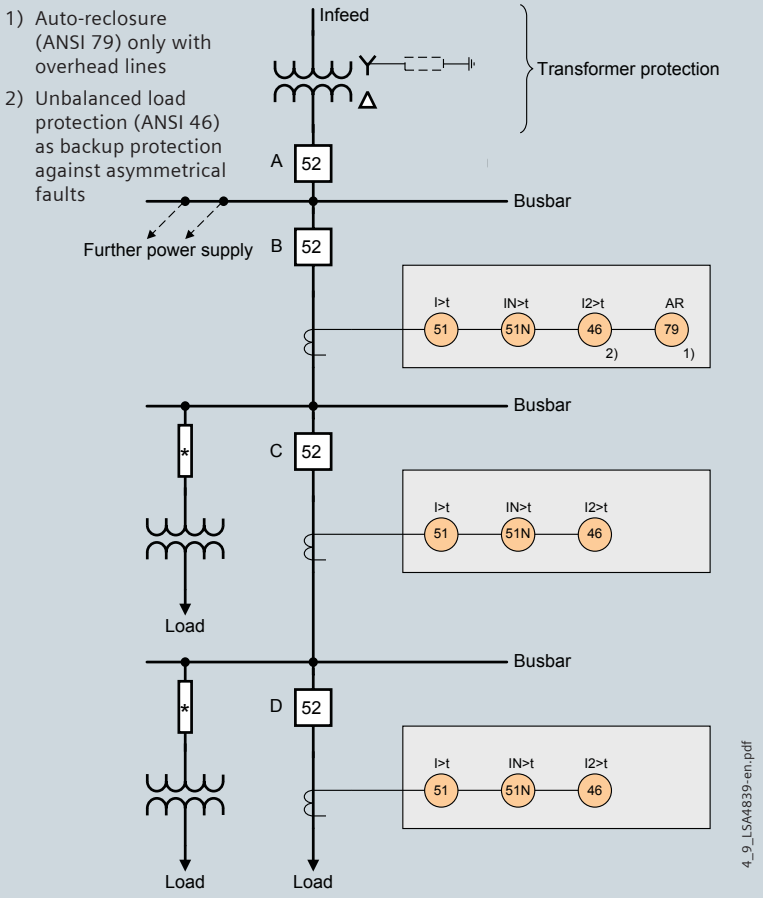

Fig. 4/9 Protection concept with time-overcurrent protection

Earth-fault detection in isolated or compensated systems

In isolated or compensated systems, an occurred earth fault can be easily found by means of sensitive directional earth-fault detection.

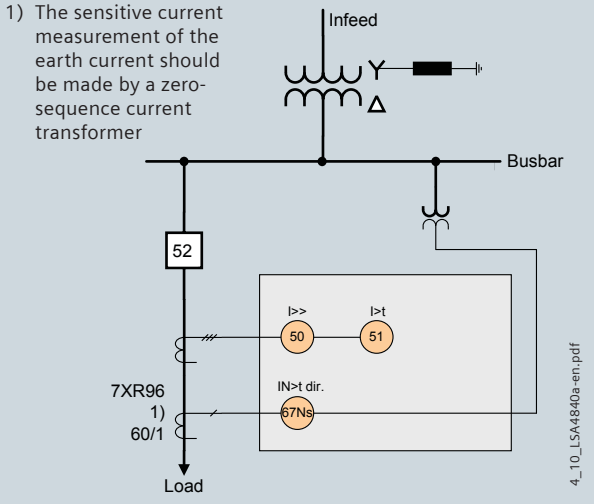

Fig. 4/10 Protection concept for directional earth-fault detection

Ring-main cable

With the directional comparison protection, 100% of the line can be protected via instantaneous tripping in case of infeed from two sources (ring-main cable).

For lines with infeed from two sources, no selectivity can be achieved with a simple definite-time overcurrent protection. Therefore, the directional definite-time overcurrent protection must be used. A non-directional definite-time overcurrent protection is enough only in the corresponding busbar feeders. The grading is done from the other end respectively.

Advantage: 100% protection of the line via instantaneous tripping, and easy setting.

Disadvantage: Tripping times increase towards the infeed.

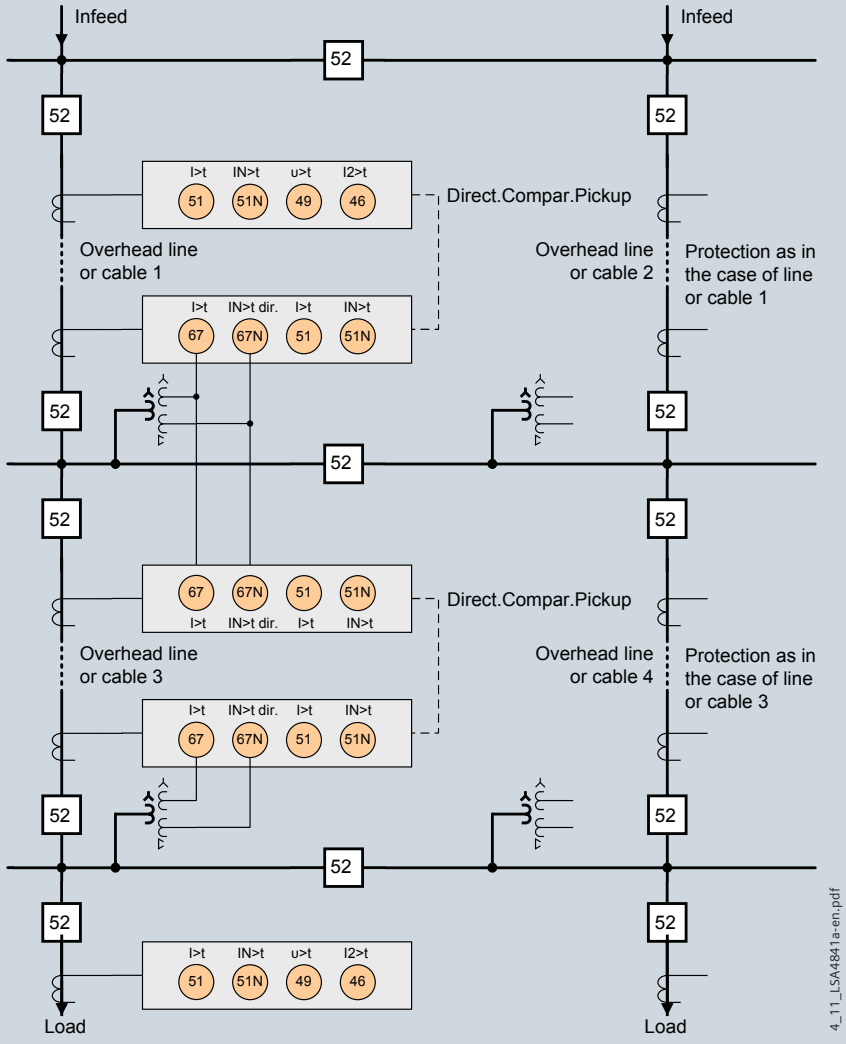

Fig. 4/11 Protection concept of ring power systems

Application examples

Busbar protection by overcurrent relays with reverse interlocking

Applicable to distribution busbars without substantial (< 0.25 x I_N) backfeed from the outgoing feeders.

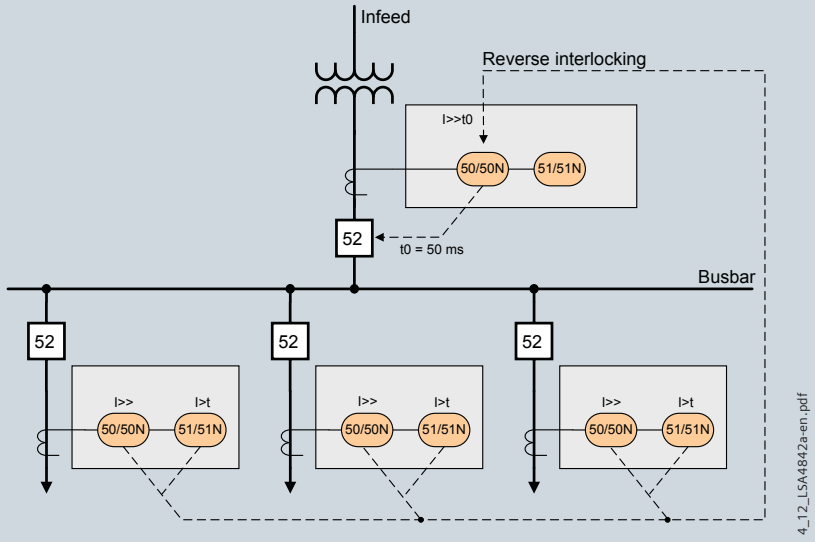

Fig. 4/12 Busbar protection via overcurrent relays with reverse interlocking

Line feeder with load shedding

In unstable power systems (e.g. solitary systems, emergency power supply in hospitals), it may be necessary to isolate selected consumers from the power system in order to protect the overall system. The overcurrent-time protection functions are effective only in the case of a short-circuit. Overloading of the generator can be measured as a frequency or voltage drop.

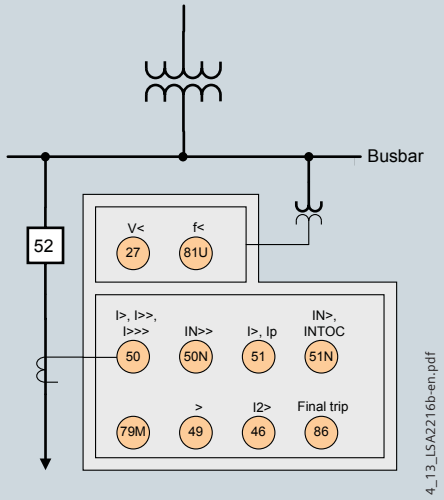

Fig. 4/13 Line feeder with load shedding

Automatic reclosing

The Automatic reclosing function (AR) has starting and blocking options. In the opposite example, the application of the blocking of the high-current stages is represented according to the reclosing cycles. The overcurrent protection is graded (stages I, I_p) according to the grading plan. If an Automatic reclosing function is installed in the incoming supply of a feeder, first of all the complete feeder is tripped instantaneously in case of fault. Arc faults will be extinguished independently of the fault location. Other protection relays or fuses do not trip (fuse saving scheme). After successful Automatic reclosing, all consumers are supplied with energy again. If there is a permanent fault, further reclosing cycles will be performed. Depending on the setting of the AR, the instantaneous tripping stage in the infeed is blocked in the first, second or third cycle, i.e., now the grading is effective according to the grading plan. Depending on the fault location, overcurrent relays with faster grading, fuses, or the relay in the infeed will trip. Only the part of the feeder with the permanent fault will be shut down definitively.

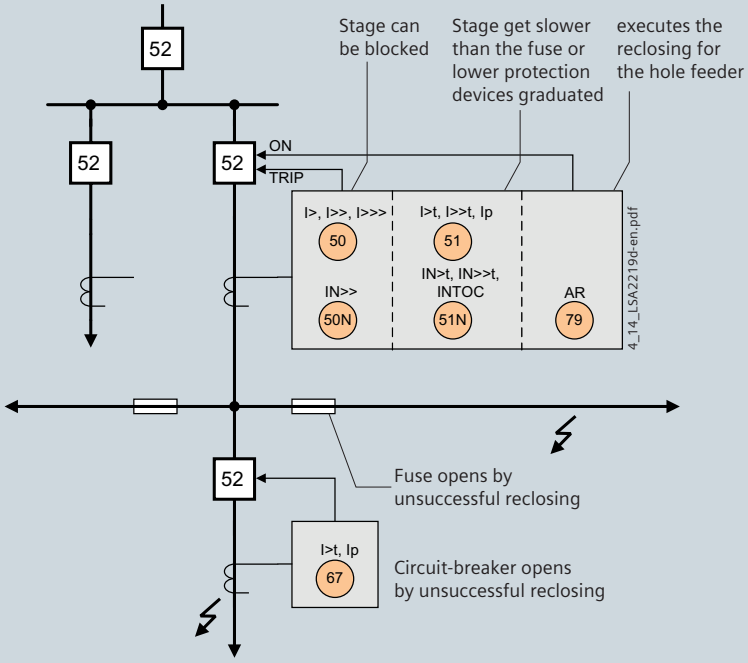

Fig. 4/14 Auto-reclosure

Reverse power protection with parallel infeeds

If a busbar is supplied by two parallel infeeds and there is a fault in one of the infeeds, the affected busbar shall be selectively shut down, so that supply to the busbar is still possible through the remaining infeed. To do this, directional devices are required, which detect a short circuit from the busbar towards the infeed. In this context, the directional time-overcurrent protection is normally adjusted over the load current. Low-current faults cannot be shut down by this protection. The reverse power protection can be adjusted far below rated power, and is thus also able to detect reverse power in case of low-current faults far below the load current. The reverse power protection is implemented through the "flexible protection functions".

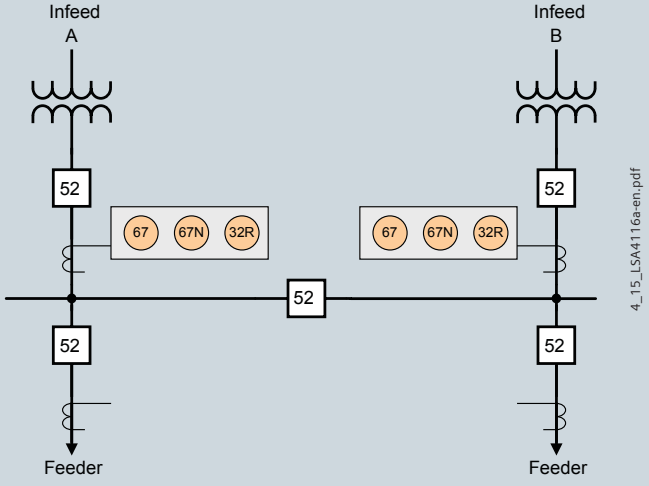

Fig. 4/15 Reverse power protection with parallel infeeds

Application examples

Synchrocheck

Where two system sections are interconnected, the synchrocheck determines whether the connection is permissible without danger to the stability of the power system. In the example, load is supplied from a generator to a busbar through a transformer. The vector group of the transformer can be considered by means of a programmable angle adjustment, so that no external adjustment elements are necessary. Synchrocheck can be used for auto-reclosure, as well as for control functions (local or remote).

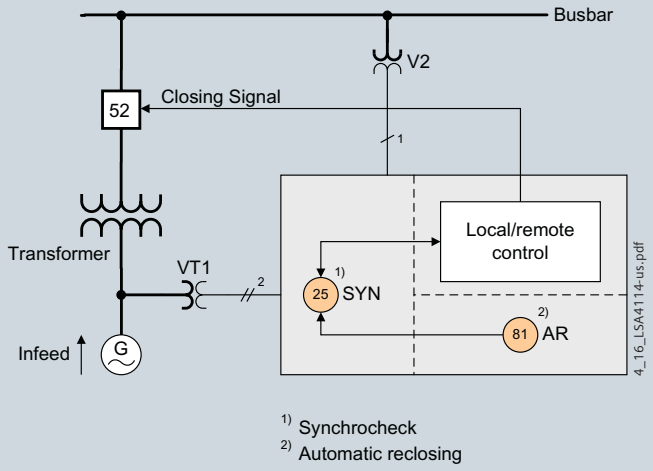

Fig. 4/16 Measurement of busbar and feeder voltage for synchronization

Protection of a transformer

The high-current stage enables a current grading, the overcurrent stages work as backup protection to subordinate protection devices, and the overload function protects the transformer from thermal overload. Low-current, single-phase faults on the low-voltage side, which are reproduced in the opposite system on the high-voltage side, can be detected with the unbalanced load protection. The available inrush blocking prevents pickup caused by the inrush currents of the transformer.

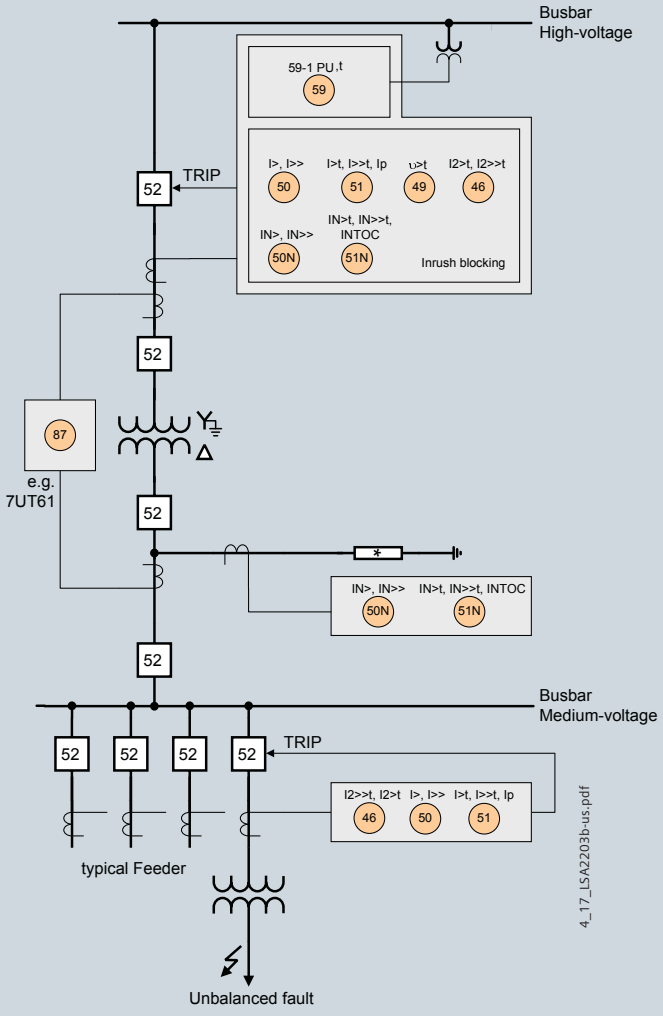

Fig. 4/17 Typical protection concept for a transformer

Undervoltage-controlled reactive power protection (QV Protection)

When connecting generating units to the medium-voltage power system of the operator, a protective disconnection device is required which takes into account frequency and voltage and also evaluates the reactive power direction. When the generating unit draws reactive power from the operator's power system, Undervoltage-controlled reactive power protection (Q> & V<) links the reactive power with all three phase-to-phase voltages falling below a limiting value using a logical AND operation.

This ensures that generating units disconnect from the power system which additionally burden the power system during a short circuit or prevent that the power system is restored when connecting after a short circuit. The monitoring of the voltage support also fulfills this function.

Using the criteria mentioned above the QV protection disconnects the generating unit from the power system after a programmable time.

The QV protection furthermore allows releasing the re-connection after the fault has been located and cleared in the power system and the system voltage and frequency are stable again.

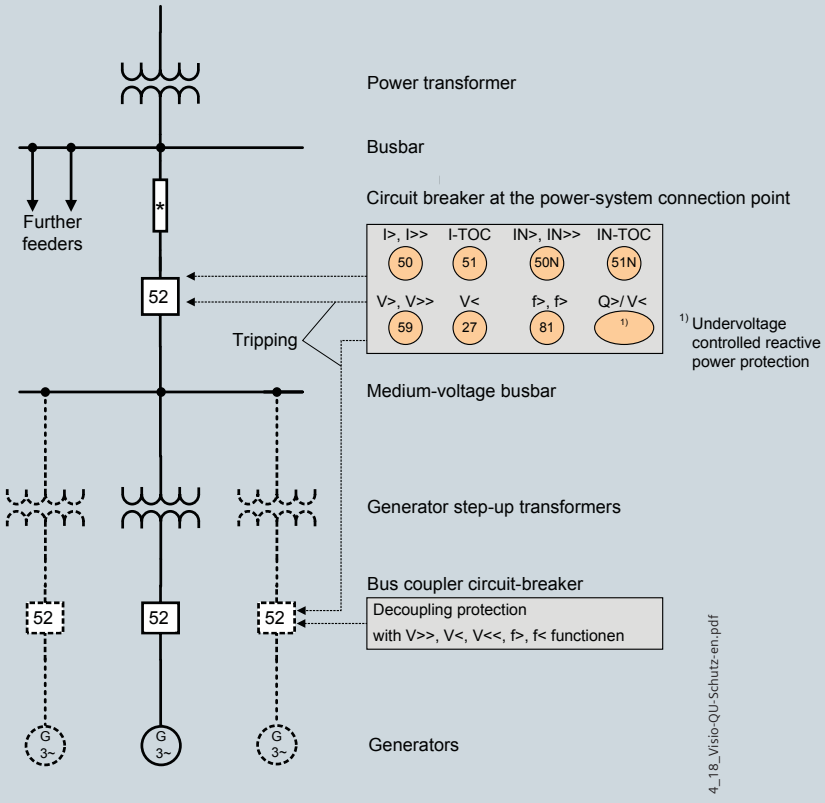

Fig. 4/18 Application directional intermittent ground fault protection

Overcurrent Protection SIPROTEC 7SJ80

Selection and ordering data

Product description	Order No.	Short code
	1 2 3 4 5 6 7 8 9 10 11 12 13 14 15 16	17 18 19
Overcurrent Protection 7SJ80 V4.7	**7SJ80** □□-□□□□□□-□□□□+□□□	
Measuring inputs, binary inputs and outputs		
Housing 1/6 19"; 4 x I, 3 BI, 5 BO (2 Changeover/Form C), 1 life contact	1	
Housing 1/6 19"; 4 x I, 7 BI, 8 BO (2 Changeover/Form C), 1 life contact	2	
Housing 1/6 19"; 4 x I, 3 x V, 3 BI, 5 BO (2 Changeover/Form C), 1 life contact	3	
Housing 1/6 19"; 4 x I, 3 x V, 7 BI, 8 BO (2 Changeover/Form C), 1 life contact	4	
Housing 1/6 19"; 4 x I, 11 BI, 5 BO (2 Changeover/Form C), 1 life contact	7	
Housing 1/6 19"; 4 x I, 3 x V, 11 BI, 5 BO (2 Changeover/Form C), 1 life contact	8	
Measuring inputs, default settings		
I_{ph} = 1A / 5A, I_e =1A / 5A	1	
I_{ph} = 1A / 5A, I_{ee} (sensitive) = 0,001 to 1,6A / 0,005 to 8A	2	
Auxiliary voltage		
DC 24 V / 48 V	1	
DC 60 V / 110 V / 125 V / 220 V / 250 V, AC 115 V, AC 230 V	5	
Construction		
Surface-mounting case, screw-type terminal	B	
Flush-mounting case, screw-type terminal	E	
Region specific default and language settings		
Region DE, IEC, language German (language changeable), standard front	A	
Region World, IEC/ANSI, language Englisch (language changeable), standard front	B	
Region US, ANSI, language US-English (language changeable), US front	C	
Region FR, IEC/ANSI, language French (language changeable), standard front	D	
Region World, IEC/ANSI, language Spanish (language changeable), standard front	E	
Region World, IEC/ANSI, language Italian (language changeable), standard front	F	
Region RUS, IEC/ANSI, language Russian (language changeable), standard front	G	
Region CHN, IEC/ANSI, language Chinese (language not changeable), Chinese front	K	
Port B (at bottom of device, rear)		
No port	0	
IEC60870-5-103 or DIGSI4/Modem, electrical RS232	1	
IEC60870-5-103 or DIGSI4/Modem, electrical RS485	2	
IEC60870-5-103 or DIGSI4/Modem, optical 820nm, ST connector	3	
PROFIBUS DP Slave, electrical RS485	9	L 0 A
PROFIBUS DP Slave, optical, double ring, ST connector	9	L 0 B
MODBUS, electrical RS485	9	L 0 D
MODBUS, optical 820nm, ST connector	9	L 0 E
DNP 3.0, electrical RS485	9	L 0 G
DNP 3.0, optical 820nm, ST connector	9	L 0 H
IEC 60870-5-103, redundant, electrical RS485, RJ45 connector	9	L 0 P
IEC 61850, 100Mbit Ethernet, electrical, double, RJ45 connector	9	L 0 R
IEC 61850, 100Mbit Ethernet, optical, double, LC connector	9	L 0 S
DNP3 TCP + IEC 61850, 100Mbit Ethernet, electrical, double, RJ45 connector	9	L 2 R
DNP3 TCP + IEC 61850, 100Mbit Ethernet, optical, double, LC connector	9	L 2 S
PROFINET + IEC 61850, 100Mbit Ethernet, electrical, double, RJ45 connector	9	L 3 R
PROFINET + IEC 61850, 100Mbit Ethernet, optical, double, LC connector	9	L 3 S
IEC 60870-5-104 + IEC 61850, 100Mbit Ethernet, electrical,double, RJ45 connector	9	L 4 R
IEC 60870-5-104 + IEC 61850, 100Mbit Ethernet, optical, double, LC connector	9	L 4 S
Port A (at bottom of device, in front)		
No port	0	
With Ethernet interface (DIGSI, I/O-Unit connection, not IEC61850), RJ45 connector	6	
Measuring/Fault Recording		
With fault recording	1	
With fault recording, average values, min/max values	3	

see next page

ANSI No.	Product description	Order No.	Short code
		1 2 3 4 5 6 7 8 9 10 11 12 13 14 15 16 17 18 19	
Overcurrent Protection 7SJ80 V4.7		**7SJ80**□□-□□□□□-□□□□+□□□	
	Basic version	**F A** [3]	
50/51	Time-overcurrent protection, phase $I>$, $I>>$, $I>>>$, I_p		
50N/51N	Time overcurrent protection, ground $I_E>$, $I_E>>$, $I_E>>>$, I_{Ep}		
50N(s)/51N(s)[1]	Sensitive ground fault protection $I_{EE}>$, $I_{EE}>>$, I_{EEp}		
	Intermittent ground fault protection		
87N[2]	High impedance REF		
49	Overload protection		
74TC	Trip circuit supervision		
50BF	Circuit-breaker failure protection		
46	Negative-sequence system overcurrent protection		
37	Undercurrent monitoring		
86	Lockout		
	Parameter changeover		
	Monitoring functions		
	Control of circuit breaker		
	Flexible protection functions (current parameters)		
	Inrush restraint		
	Basic functionality + Directional sensitive ground fault, voltage and frequency protection	**F B** [4]	
51V	Voltage dependent inverse-time overcurrent protection		
67N	Directional time-overcurrent protection, ground, $I_E>$, $I_E>>$, $I_E>>>$, I_{Ep}		
67Ns[1]	Directional sensitive ground fault protection, $I_{EE}>$, $I_{EE}>>$, I_{EEp}		
64/59N	Displacement voltage		
27/59	Under/Overvoltage		
81U/O	Under/Overfrequency, $f<$, $f>$		
47	Phase rotation		
	Flexible protection functions (current and voltage parameters)): Protective function for voltage,		
27R/32/55/59R/81R	power, power factor, rate-of-frequency change, rate-of-voltage change		
	Basic functionality + Directional phase & ground overcurrent, directional sensitive ground fault, voltage and frequency protection	**F C** [4]	
51V	Voltage dependent inverse-time overcurrent protection		
67	Directional time-overcurrent protection, phase, $I>$, $I>>$, $I>>>$, I_p		
67N	Directional time-overcurrent protection, ground, $I_E>$, $I_E>>$, $I_E>>>$, I_{Ep}		
67Ns[1]	Sensitive ground-fault protection, $I_{EE}>$, $I_{EE}>>$, I_{EEp}		
64/59N	Displacement voltage		
27/59	Under/Overvoltage		
81U/O	Under/Overfrequency, $f<$, $f>$		
47	Phase rotation		
	Flexible protection functions (current and voltage parameters)): Protective function for voltage,		
27R/32/55/59R/81R	power, power factor, rate-of-frequency change, rate-of-voltage change		
	Basic functionality + Directional phase & ground overcurrent, directional sensitive ground fault, voltage and frequency protection + Undervoltage controlled reactive power protection + Directional intermittent ground fault protection	**F F** [4]	
51V	Voltage dependent inverse-time overcurrent protection		
67	Directional overcurrent protection, phase, $I>$, $I>>$, $I>>>$, I_p		
67N	Directional overcurrent protection, ground, $I_E>$, $I_E>>$, $I_E>>>$, I_{Ep}		
67Ns[1]	Directional sensitive ground fault protection, $I_{EE}>$, $I_{EE}>>$, I_{EEp}		
67Ns[2]	Directional intermittent ground fault protection		
64/59N	Displacement voltage		
27/59	Under/Overvoltage		
81U/O	Under/Overfrequency, $f<$, $f>$		
27Q	Undervoltage controlled reactive power protection, Q>/V<		
47	Phase rotation		
	Flexible protection functions (current and voltage parameters)): Protective function for voltage,		
27R/32/55/59R/81R	power, power factor, rate-of-frequency change, rate-of-voltage change		

see next page

1) Depending on the ground current input the function will be either sensitive (I_{EE}) or non-sensitive (I_E)

2) Function only available with sensitive ground current input (Position 7=**2**)

3) Only if position 6 = **1**, **2** or **7**

4) Only if position 6 = **3**, **4** or **8**

You will find a detailed overview of the technical data (extract of the manual) under: http://www.siemens.com/siprotec

Overcurrent Protection SIPROTEC 7SJ80

Selection and ordering data

ANSI No.	Product description	Order No.	Short code
		1 2 3 4 5 6 7 8 9 10 11 12 13 14 15 16 17 18 19	
Overcurrent Protection 7SJ80 V4.7		**7SJ80**□□-□□□□□□-□□□□+□□□	
	Basic functionality + Directional phase overcurrent, voltage and frequency protection + synchrocheck		**F** **Q** **5)**
51V	Voltage dependent inverse-time overcurrent protection		
67	Directional time-overcurrent protection, phase, $I>$, $I>>$, $I>>>$, I_p		
27/59	Under/Overvoltage (phase-to-phase)		
81U/O	Under/Overfrequency, $f<$,$f>$		
47	Phase rotation		
25	Synchrocheck		
27R/59R/81R	Flexible protection functions (current and voltage parameters)): Protective function for voltage, rate-of-frequency change, rate-of-voltage change		
	Automatic Reclosing (AR), Fault Locator (FL)		
	Without		**0**
79	With automatic reclosure function		**1**
21FL	With FL (only with position 6 = 3, 4 or 8)		**2**
79/FL	With automatic reclosure function and FL (only with position 6 = 3, 4 or 8)		**3**

You will find a detailed overview of the technical data (extract of the manual) under: http://www.siemens.com/siprotec

5) Only with position 6 = **3** or **4** and position 16 = **0** or **1**

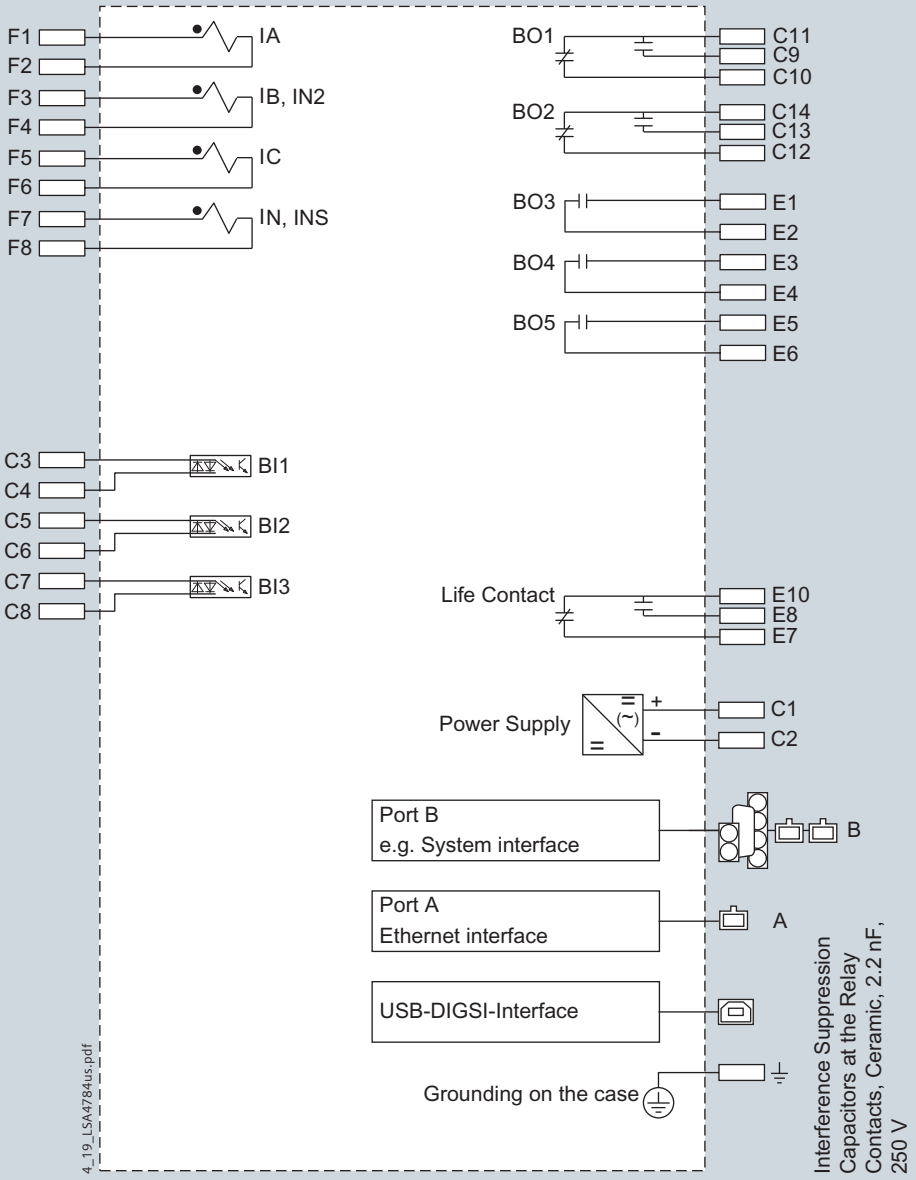

Fig. 4/19 Multifunction protection SIPROTEC 7SJ801

Connection diagrams

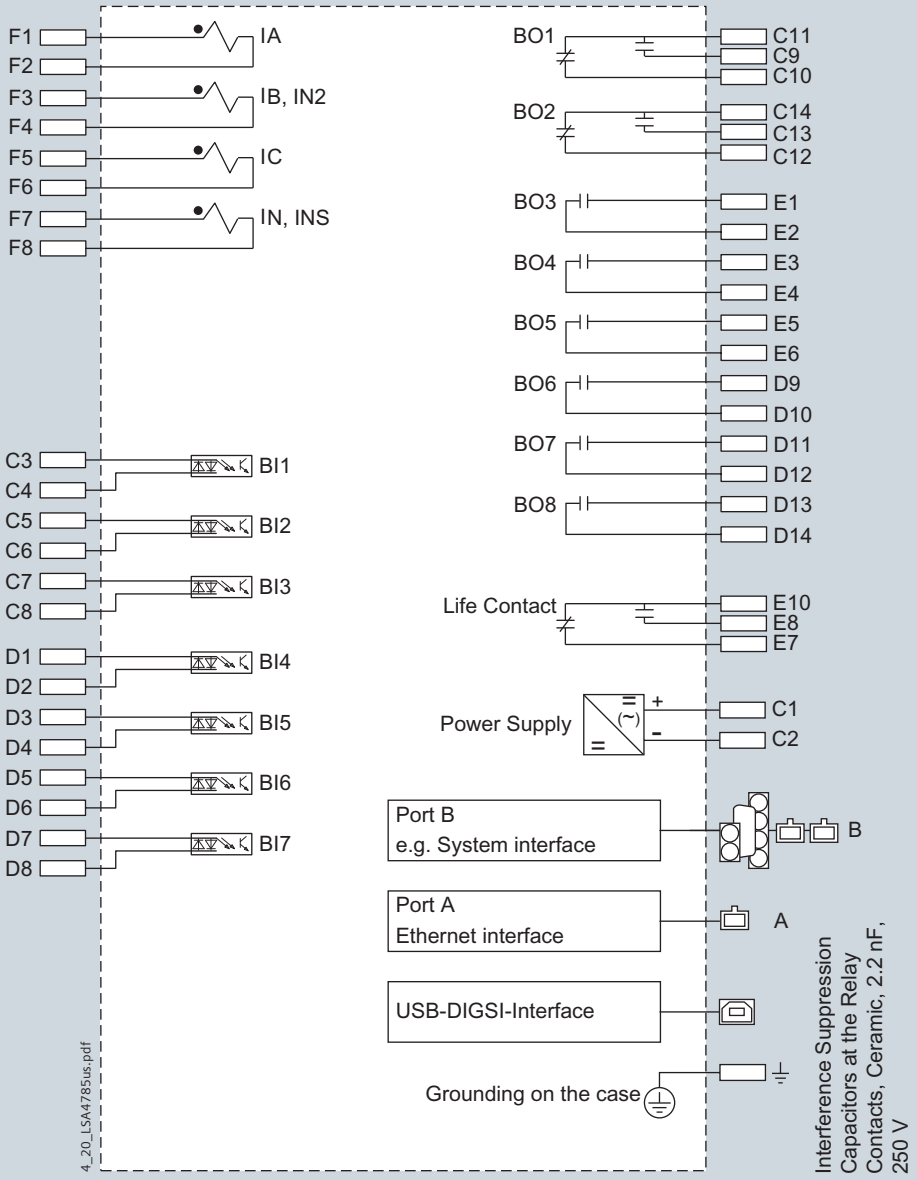

Fig. 4/20 Multifunction protection SIPROTEC 7SJ802

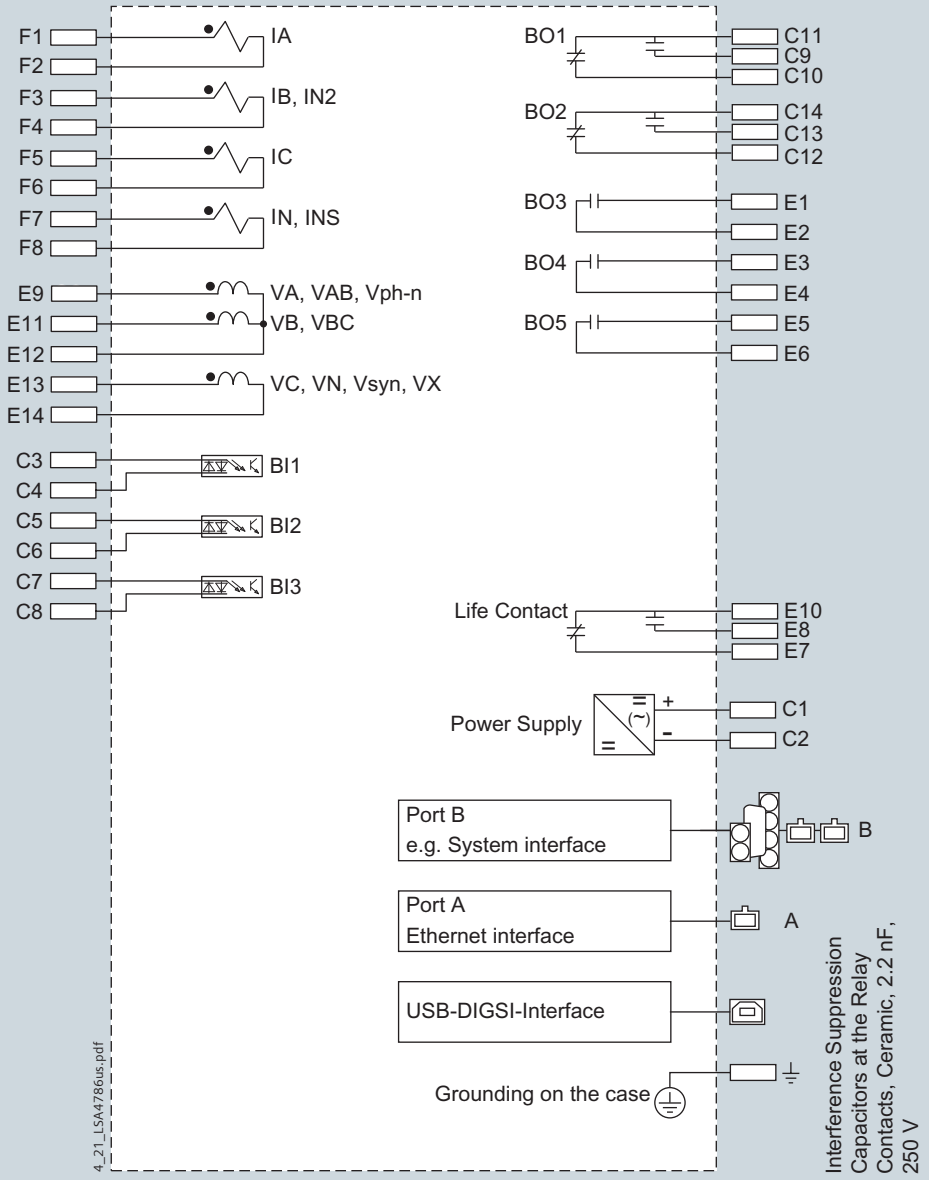

Fig. 4/21 Multifunction protection SIPROTEC 7SJ803

Connection diagrams

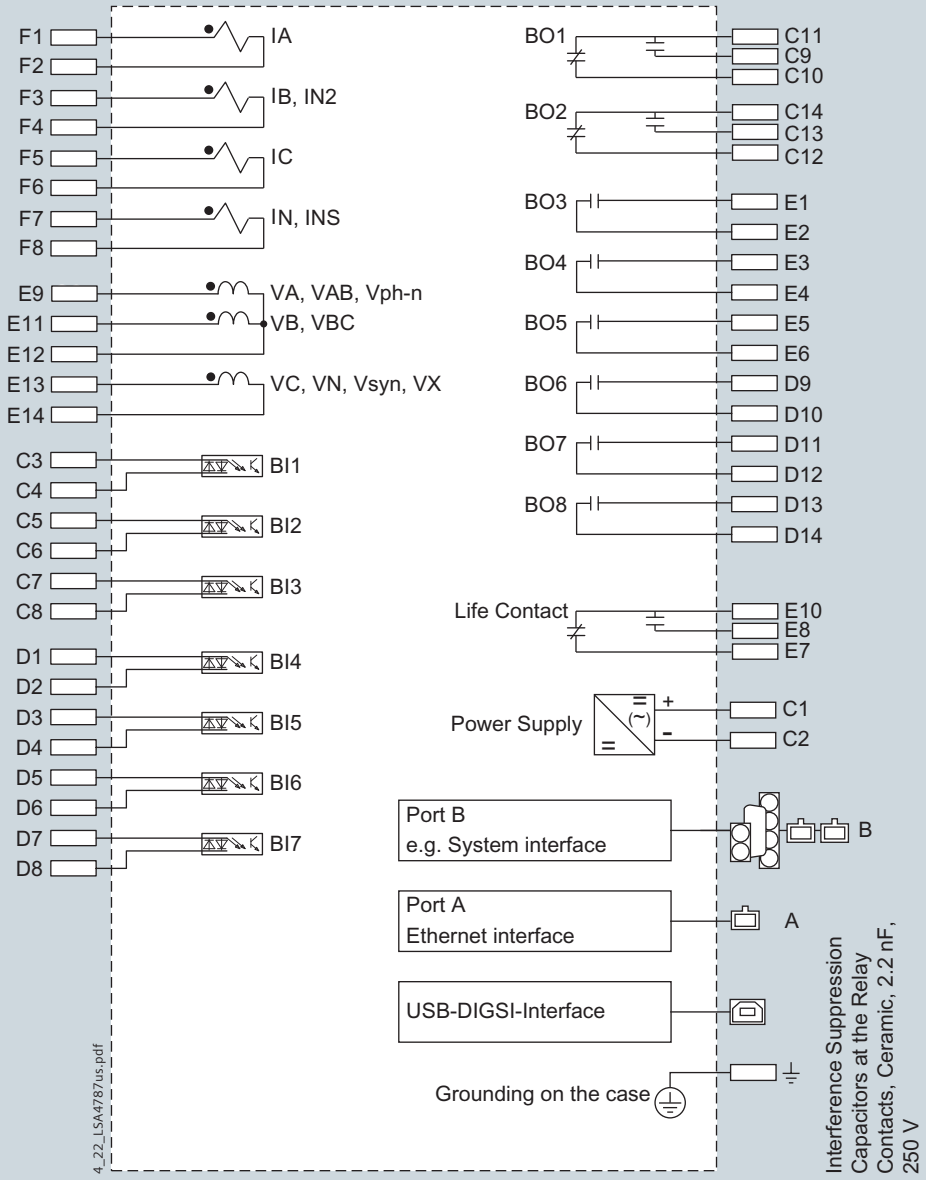

Fig. 4/22 Multifunction protection SIPROTEC 7SJ804

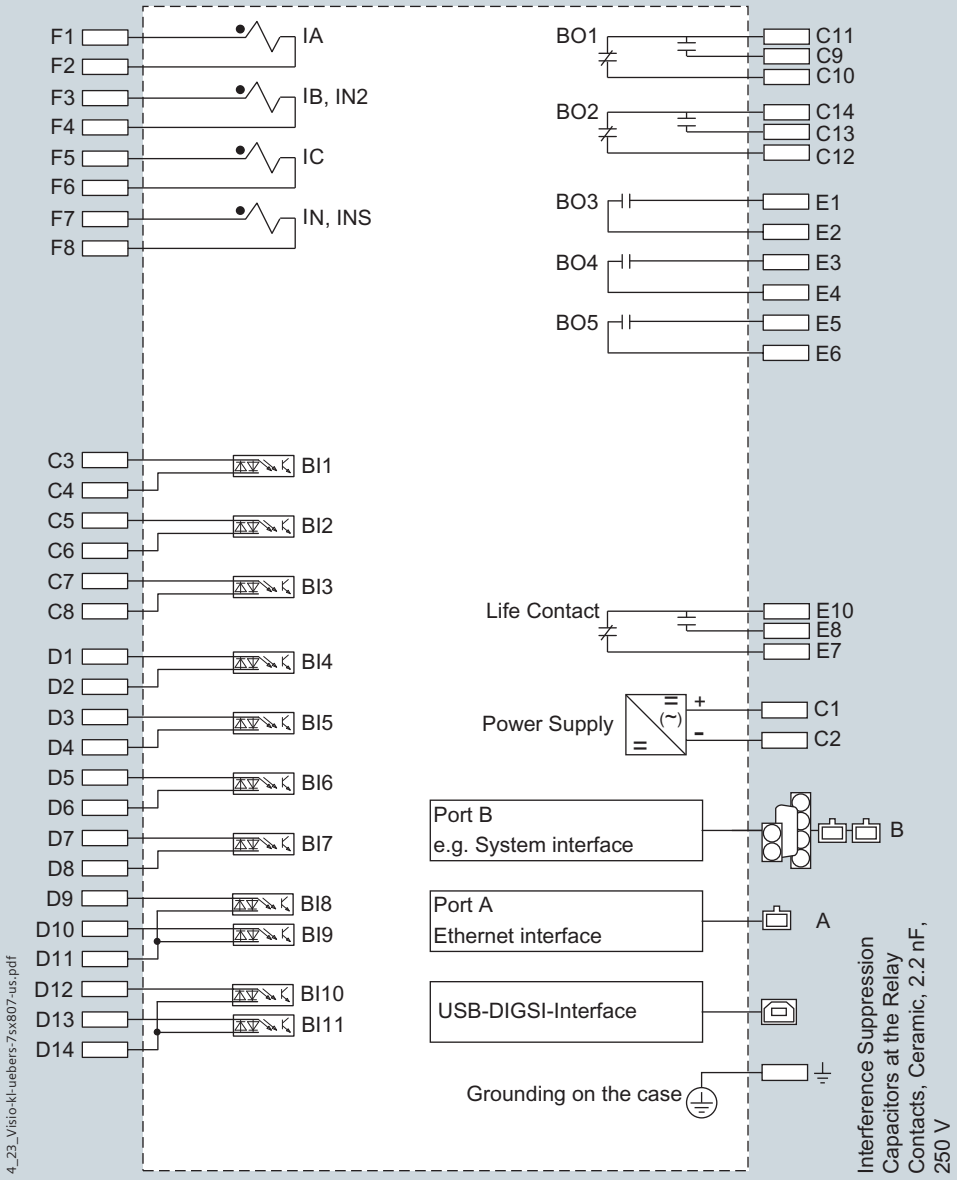

Fig. 4/23 Multifunction protection SIPROTEC 7SJ807

Connection diagrams

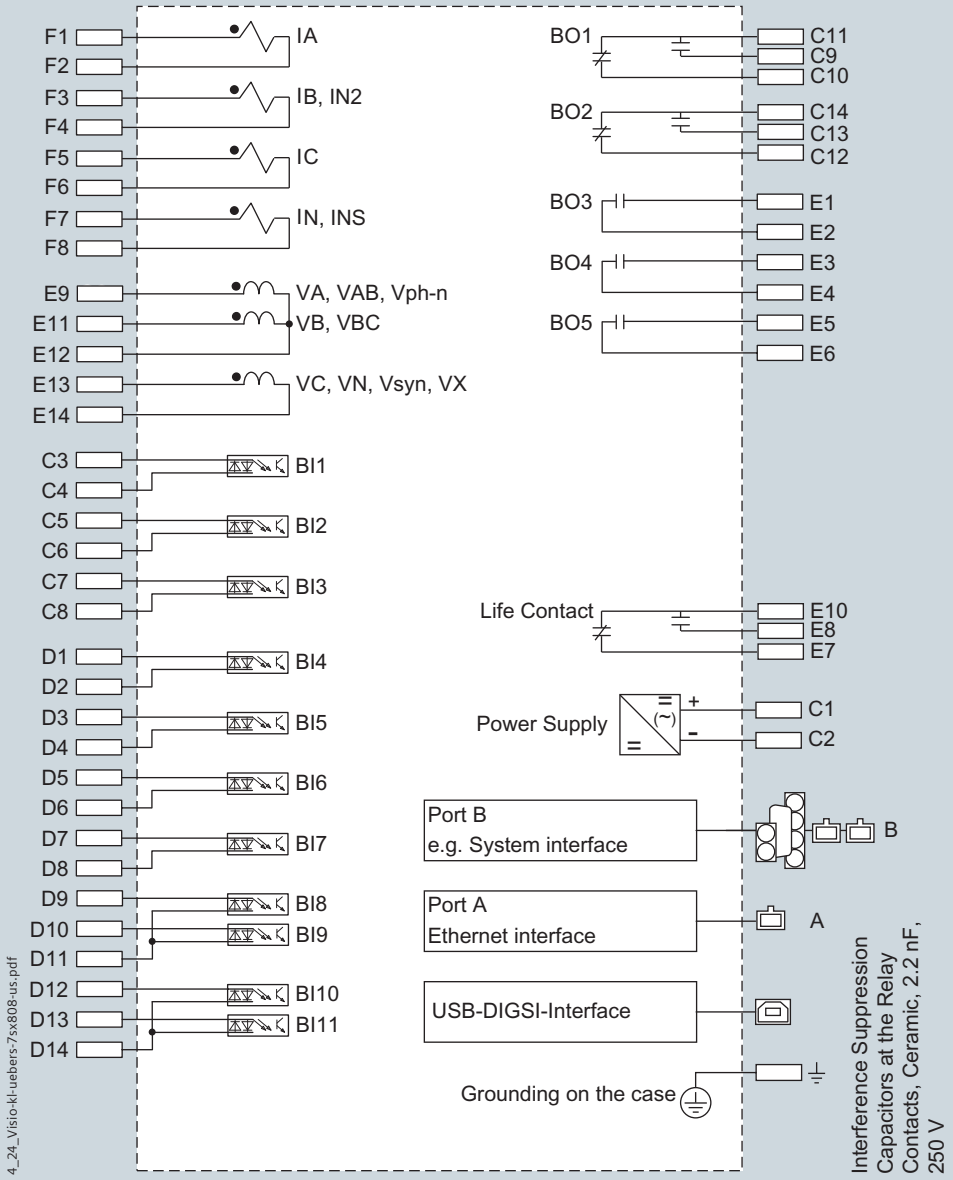

Fig. 4/24 Multifunction protection SIPROTEC 7SJ808

Connection of current and voltage transformers

Standard connection

For grounded networks, the ground current is obtained from the phase currents by the residual current circuit.

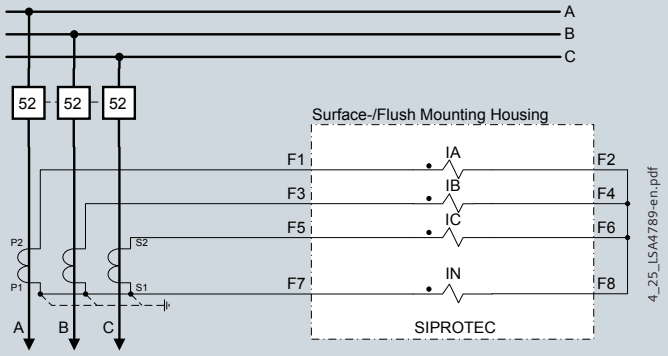

Fig. 4/25 Residual current circuit without directional element

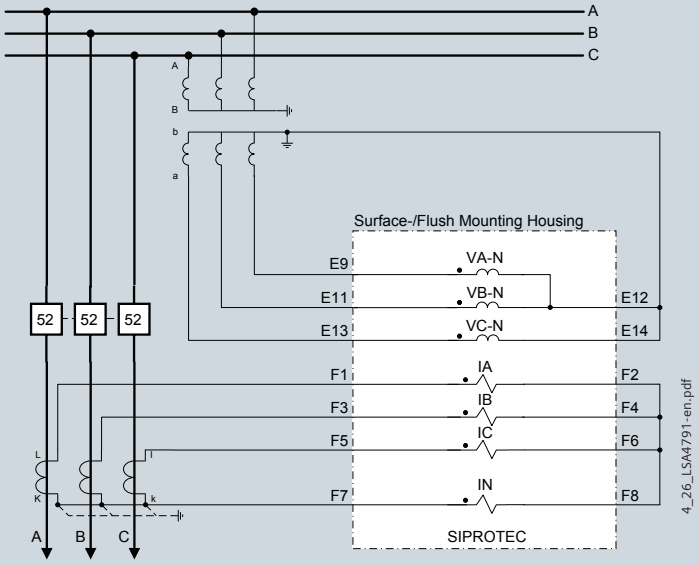

Fig. 4/26 Residual current circuit with directional element

For power systems with small earth currents, e.g. isolated or compensated systems, the earth current is measured by a zero-sequence current transformer.

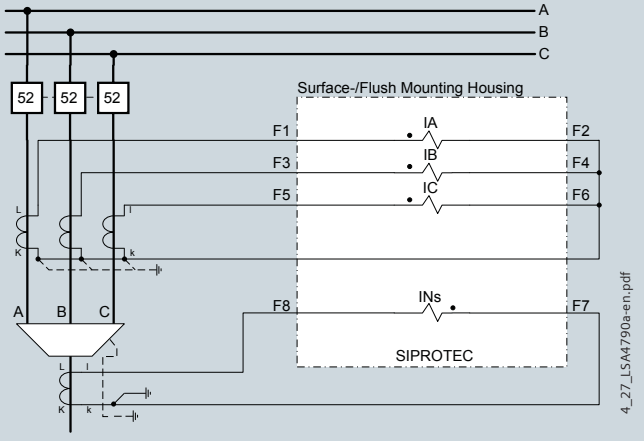

Fig. 4/27 Sensitive ground current detection without directional element

Connection examples

Connection for compensated networks

The figure shows the connection of two phase-to-ground voltages and the V_E voltage of the broken delta winding and a phase-balance neutral current transformer for the ground current. This connection maintains maximum precision for directional ground-fault detection and must be used in compensated networks.

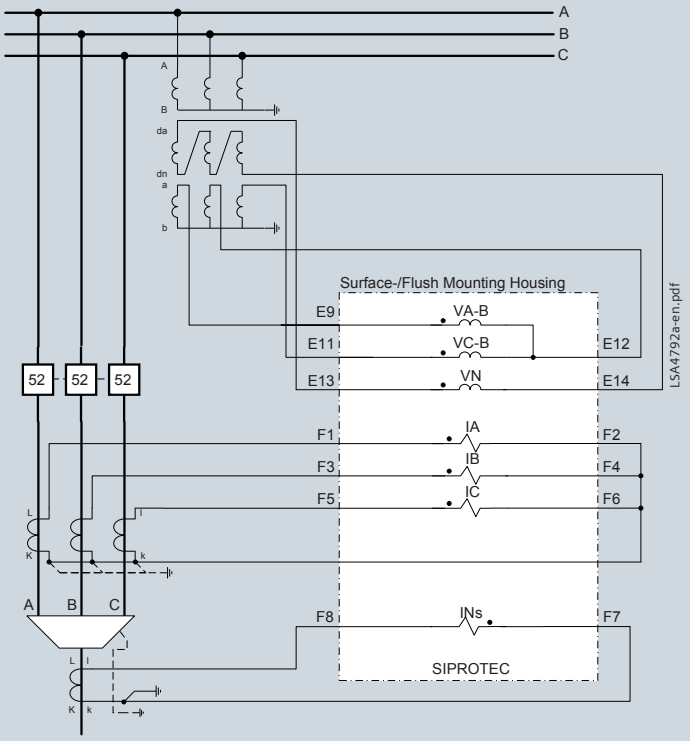

Fig. 4/28 Sensitive directional ground-fault detection with directional element for phases

Sensitive directional ground-fault detection.

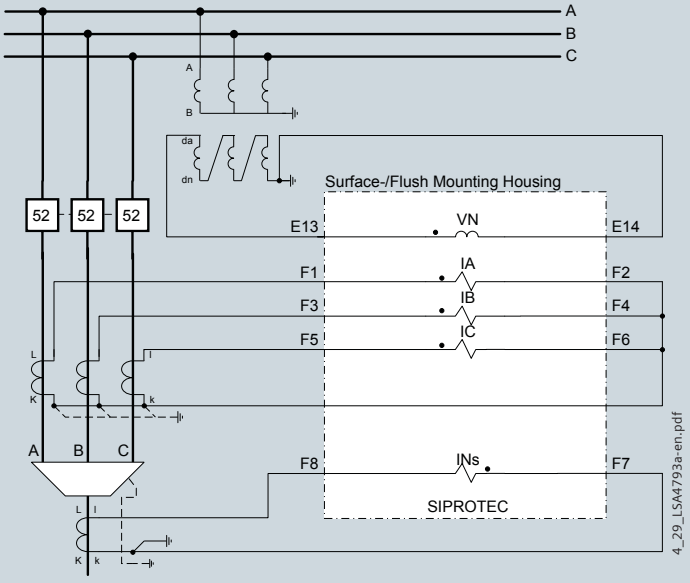

Fig. 4/29 Sensitive directional ground-fault detection

Connection for the synchrocheck function

If no directional earth-fault protection is used, connection can be done with just two phase current transformers. For the directional phase short-circuit protection, the phase-to-phase voltages acquired with two primary transformers are sufficient.

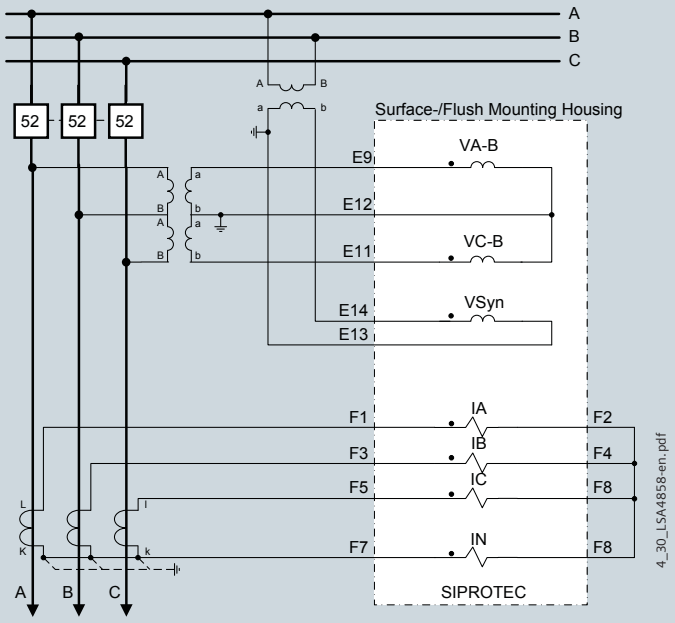

Fig. 4/30 Measuring of the busbar voltage and the outgoing feeder voltage for synchronization

Connection types

Overview of connection types

Type of network	Function	Current connection	Voltage connection
(Low-resistance) grounded networks	Time-overcurrent protection phase/ground non-directional	Residual circuit, with 3 phase-current transformers required, phase-balance neutral current transformers possible	–
(Low-resistance) grounded networks	Sensitive ground-fault protection	Phase-balance neutral current transformers required	–
Isolated or compensated networks	Overcurrent protection phases non-directional	Residual circuit, with 3 or 2 phase-current transformers possible	–
(Low-resistance) grounded networks	Directional time-overcurrent protection, phase	Residual circuit, with 3 phase-current transformers possible	Phase-to-ground connection or phase-to-phase connection
Isolated or compensated networks	Directional time- overcurrent protection, phase	Residual circuit, with 3 or 2 phase-current transformers possible	Phase-to-ground connection or phase-to-phase connection
(Low-resistance) grounded networks	Directional time-overcurrent protection, ground-faults	Residual circuit, with 3 phase-current transformers required, phase-balance neutral current transformers possible	Phase-to-ground connection required
Isolated networks	Sensitive ground-fault protection	Residual circuit, if ground current > 0.05 I_N on secondary side, otherwise phase-balance neutral current transformers required	3 times phase-to-ground connection or phase-to-ground connection with broken delta winding
Compensated networks	Sensitive ground-fault protection cos φ measurement	Phase-balance neutral current transformers required	3 times phase-to-ground connection or phase-to-ground connection with broken delta winding

Table 4/4 Overview of connection types

SIEMENS



SIPROTEC Compact Overcurrent Protection 7SJ81 for Low-Power CT and VT Applications

Overcurrent Protection SIPROTEC 7SJ81

for Low-Power CT and VT Applications

	Page
Description	5/3
Function overview	5/4
Applications	5/5
Application sheets	5/6
Application examples	5/12
Selection and ordering data	5/14
Connection diagrams	5/16
Connection examples	5/20

5

You will find a detailed overview of the technical data (extract of the manual) under:
http://www.siemens.com/siprotec

Description

The SIPROTEC 7SJ81 provides 4 low-power current transformer inputs and optionally 3 low-power voltage transformer inputs. With the same low-power current transformer (LPCT) a wide range of primary rated line currents can be covered. Objects with rated currents in the range of 40 A to 5000 A can be protected when using low-power current transformers. The following low-power current transformer ratios are suitable for the following primary current operating ranges:

- 100 A/225 mV for a primary operating current range of 40 A ... 600 A
- 50 A/22.5 mV for a primary operating current range of 200 A ... 3000 A
- 400 A/225 mV for a primary operating current range of 200 A ... 2500 A
- 100 A/22.5mV for a primary operating current range of 400A ... 5000 A

The SIPROTEC 7SJ81 is a multi-functional motor protection relay. It is designed for protection of asynchronous motors of all sizes. The relays have all the required functions to be applied as a backup relay to a transformer differential relay.

The relay provides numerous functions to respond flexibly to the system requirements and to deploy the invested capital economically. Examples for this are: exchangeable interfaces, flexible protection functions and the integrated automation level (CFC). Freely assignable LEDs and a six-line display ensure a unique and clear display of the process states. In combination with up to 9 function keys, the operating personnel can react quickly and safely in any situation. This guarantees a high operational reliability.

Highlights

- Inputs for Low power CTs and VTs according IEC 61869-6 (formerly IEC 60044-7 and IEC 60044-8)
- Removable terminal blocks
- Binary input thresholds settable using DIGSI (3 stages)
- 9 programmable function keys
- 6-line display
- Buffer battery exchangeable from the front
- USB front port
- 2 additional communication ports
- Integrated switch for low-cost and redundant optical Ethernet rings
- Ethernet redundancy protocols RSTP, PRP and HSR for highest availability
- Relay-to-relay communication through Ethernet with IEC 61850 GOOSE
- Millisecond-accurate time synchronization through Ethernet with SNTP.



Bild 5/1 SIPROTEC 7SJ81 front view



Bild 5/2 SIPROTEC 7SJ81 rear view

5

Overcurrent Protection SIPROTEC 7SJ81

for Low-Power CT and VT Applications – Function overview

Protection functions	IEC	ANSI No.
Instantaneous and definite time-overcurrent protection (phase/neutral)	$I>$, $I>>$, $I>>>$, $I_E>$, $I_E>>$, $I_E>>>$; I_p, I_{Ep}	50, 50N; 51, 51N
Directional time-overcurrent protection	$I_{dir}>$, $I>>$, $I_{p\ dir}$	67
Directional time-overcurrent protection for ground-faults	$I_{E\ dir}>$, $I_{E\ dir}>>$, $I_{Ep\ dir}$	67N
Directional/non-directional sensitive ground-fault detection	$I_{EE}>$, $I_{EE}>>$, I_{EEp}	67Ns , 50Ns
Overvoltage protection, zero-sequence system	V_E, $V_0>$	59N
Inrush restraint		
Trip-circuit supervision	AKU	74TC
Undercurrent monitoring	$I<$	37
Thermal overload protection	$\vartheta>$	49
Undervoltage/overvoltage protection	$V<$, $V>$	27/59
Overfrequency/underfrequency protection	$f<$, $f>$	81O/U
Breaker failure protection		50BF
Phase-balance current protection (negative-sequence protection)	$I_2>$	46
Unbalance-voltage protection and/or phase-sequence monitoring	$V_2>$, phase sequence	47
Automatic reclosing		79
Fault locator		FL
Lockout		86
Forward-power, reverse-power protection	$P<>$, $Q<>$	32
Power factor	cos φ	55
Rate-of-frequency-change protection	df/dt	81R

Table 5/1 Function overview

5

Control functions/programmable logic

- Commands for the ctrl. of CB, disconnect switches (isolators/isolating switches)
- Control through keyboard, binary inputs, DIGSI 4 or SCADA system
- User-defined PLC logic with CFC (e.g. interlocking).

Monitoring functions

- Operational measured values *I*, *V*, *f*
- Energy metering values Wp, Wg
- Circuit-breaker wear monitoring
- Minimum and maximum values
- Trip-circuit supervision (74TC)
- Fuse failure monitor
- 8 oscillographic fault records.

Communication interfaces

- System/service interface
  - IEC 61850 Edition 1 and 2
  - IEC 60870-5-103
  - PROFIBUS-DP
  - DNP 3.0
  - MODBUS RTU
  - Ethernet redundancy protocols RSTP, PRP and HSR
- Ethernet interface for DIGSI 4
- USB front interface for DIGSI 4.

Hardware

- 4 current inputs
- 0/3 voltage inputs
- 3/7 binary inputs (thresholds configurable using software)
- 5/8 binary outputs (2 changeover/Form C contacts)
- 1 life contact
- Pluggable voltage terminals.

The SIPROTEC 7SJ81 unit is a numerical protection with low power CT and VT inputs. The device performs control and monitoring functions and therefore provides the user with a cost-effective platform for power system management, that ensures reliable supply of electrical power to the customers. The ergonomic design makes control easy from the relay front panel. A large, easy-to-read display was a key design factor.

Control

The integrated control function permits control of disconnect devices, grounding switches or circuit-breakers through the integrated operator panel, binary inputs, DIGSI 4 or the control or automation system (e.g. SICAM).

Programmable logic

The integrated logic characteristics (CFC) allow the user to add own functions for automation of switchgear (e.g. interlocking) or switching sequence. The user can also generate user-defined messages. This functionality can form the base to create extremely flexible transfer schemes.

Operational measured values

Extensive measured values (e.g. I, V), metered values (e.g. W_p,W_q) and limit values (e.g. for voltage, frequency) provide improved system management.

Operational indications

Event logs, trip logs, fault records and statistics documents are stored in the relay to provide the user or operator with all the key data required to operate modern substations.

Line protection

The SIPROTEC 7SJ81 units can be used for line protection of high and medium-voltage networks with grounded, low-resistance grounded, isolated or a compensated neutral point.

Transformer protection

The relay provides all the functions for backup protection for transformer differential protection. The inrush suppression effectively prevents unwanted trips that can be caused by inrush currents.

Backup protection

SIPROTEC 7SJ81 can be used as a backup protection for a wide range of applications.

Switchgear cubicles for high/medium voltage

All units are designed specifically to meet the requirements of medium-voltage applications. In general, no separate measuring instruments (e.g., for current, voltage, frequency, ...) or additional control components are necessary in the cubicles.

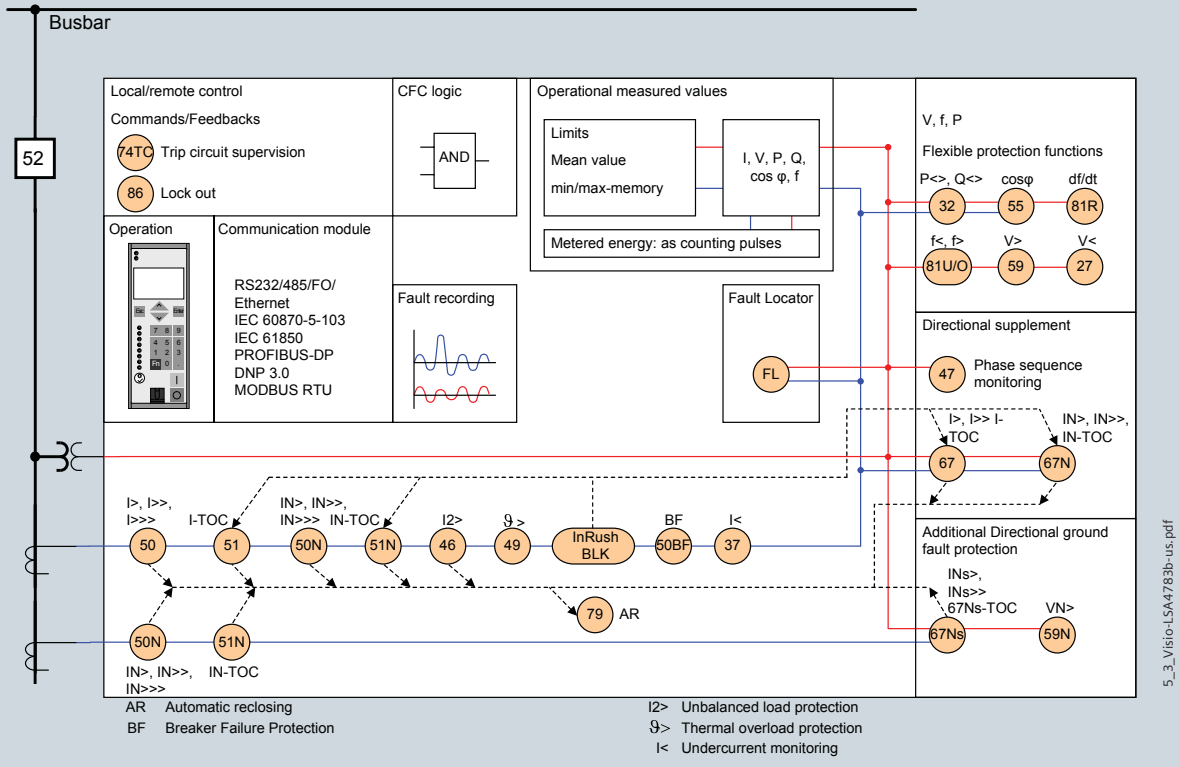

Fig. 5/3 Function diagram

5

Protection functions

Overcurrent protection (ANSI 50, 50N, 51, 51N)

This function is based on the phase-selective measurement of the three phase currents and the ground current (four transformers). Three definite time-overcurrent protection elements (DMT) are available both for the phase and the ground elements. The current threshold and the delay time can be set in a wide range.

Inverse time-overcurrent protection characteristics (IDMTL) can also be selected and activated.

Reset characteristics

Time coordination with electromechanical relays is made easy with the inclusion of the reset characteristics according to ANSI C37.112 and IEC 60255-3/BS 142 standards. When using the reset characteristic (disk emulation), the reset process is initiated after the fault current has disappeared. This reset process corresponds to the reverse movement of the Ferraris disk of an electromechanical relay (disk emulation).

Available inverse-time characteristics

Characteristics acc. to	IEC 60255-3	ANSI/IEEE
Inverse	•	•
Short inverse		•
Long inverse	•	•
Moderately inverse		•
Very inverse	•	•
Extremely inverse	•	•

Table 5/2 Available inverse-time characteristics

Inrush restraint

If second harmonic content is detected during the energization of a transformer, the pickup of stages $I>$, I_p, $I>_{dir}$ and $I_{p\ dir}$ is blocked.

Dynamic settings group switching

In addition to the static parameter changeover, the pickup thresholds and the tripping times for the directional and non-directional time-overcurrent protection functions can be changed over dynamically. As changeover criterion, the circuit-breaker position, the prepared auto-reclosure, or a binary input can be selected.

Directional comparison protection (cross-coupling)

It is used for selective instantaneous tripping of sections fed from two sources, i.e. without the disadvantage of time delays of the set characteristic. The directional comparison protection is suitable if the distances between the protection zones are not significant and pilot wires are available for signal transmission. In addition to the directional comparison protection, the directional coordinated time-overcurrent protection is used for complete selective backup protection.

Directional time-overcurrent protection (ANSI 67, 67N)

Directional phase and ground protection are separate functions. They operate in parallel to the non-directional overcurrent elements. Their pickup values and delay times can be set separately. Definite-time and inverse-time characteristics are offered. The tripping characteristic can be rotated by ± 180 degrees.

By making use of the voltage memory, the directionality can be determined reliably even for close-in (local) faults. If the primary switching device closes onto a fault and the voltage is too low to determine direction, the direction is determined using voltage from the memorized voltage. If no voltages are stored in the memory, tripping will be according to the set characteristic.

For ground protection, users can choose whether the direction is to be calculated using the zero-sequence or negative-sequence system quantities (selectable). If the zero-sequence voltage tends to be very low due to the zero-sequence impedance it will be better to use the negative-sequence quantities.

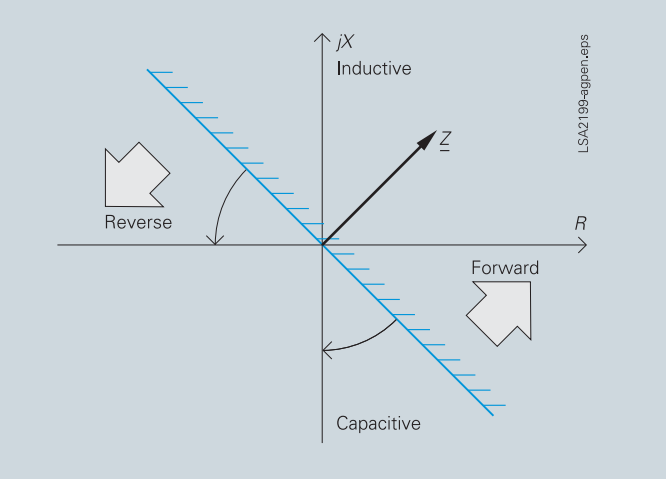

Fig. 5/4 Directional characteristics of the directional time-overcurrent protection

(Sensitive) directional ground-fault detection (ANSI 59N/64, 67Ns, 67N)

For isolated-neutral and compensated networks, the direction of power flow in the zero sequence is calculated from the zero-sequence current I_0 and zero-sequence voltage V_0. For networks with an isolated neutral, the reactive current component is evaluated; for compensated networks, the active current component or residual resistive current is evaluated. For special network conditions, e.g. high-resistance grounded networks with ohmic-capacitive ground-fault current or low-resistance grounded networks with ohmic-inductive current, the tripping characteristics can be rotated approximately ± 45 degrees (see Fig.5/5).

Two modes of ground-fault direction detection can be implemented: tripping or "signalling only mode".

It has the following functions:

- TRIP via the displacement voltage V_E
- Two instantaneous elements or one instantaneous plus one user-defined characteristic.
- Each element can be set to forward, reverse or non-directional.
- The function can also be operated in the insensitive mode as an additional short-circuit protection.

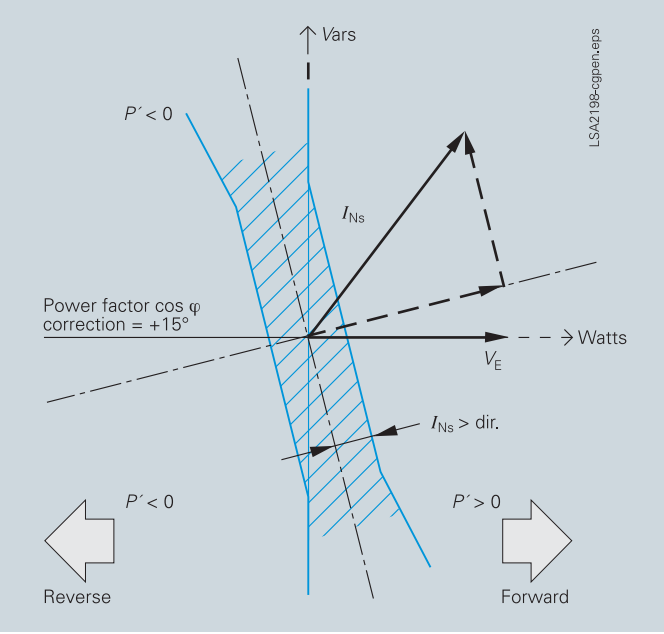

Fig. 5/5 Directional determination using cosine measurements for compensated networks

(Sensitive) ground-fault detection (ANSI 50Ns, 51Ns / 50N, 51N)

For high-resistance grounded networks, a sensitive input transformer is connected to a split-core low-power current transformer (also called core-balance CT). The function can also be operated in the normal mode as an additional short-circuit protection for neutral or residual ground protection.

Negative-sequence system overcurrent protection (ANSI 46)

By measuring current on the high side of the transformer, the two-element phase-balance current/negative-sequence protection detects high-resistance phase-to-phase faults and phase-to-ground faults on the low side of a transformer (e.g. Dy 5). This function provides backup protection for high-resistance faults through the transformer.

Breaker failure protection (ANSI 50BF)

If a faulted portion of the electrical circuit is not disconnected when a trip command is issued to a circuit-breaker, another trip command can be initiated using the breaker failure protection which trips the circuit-breaker of an upstream feeder. Breaker failure is detected if, after a trip command is issued and the current keeps on flowing into the faulted circuit. It is also possible to make use of the circuit-breaker position contacts (52a or 52b) for indication as opposed to the current flowing through the circuit-breaker.

Automatic reclosing (ANSI 79)

Multiple re-close cycles can be set by the user and lockout will occur if a fault is present after the last re-close cycle.

The following functions are available:

- 3-pole ARC for all types of faults
- Separate settings for phase and ground faults
- Multiple ARC, one rapid auto-reclosure (RAR) and up to nine delayed auto-reclosures (DAR)
- Initiation of the ARC is dependant on the trip command selected (e.g. I_2>, I>>, I_p, I_{dir}>)
- The ARC function can be blocked by activating a binary input
- The ARC can be initiated from external or by the PLC logic (CFC)
- The directional and non-directional elements can either be blocked or operated non-delayed depending on the auto-reclosure cycle
- If the ARC is not ready it is possible to perform a dynamic setting change of the directional and non-directional overcurrent elements.

Flexible protection functions

The SIPROTEC 7SJ81 enables the user to easily add up to 20 additional protection functions. Parameter definitions are used to link standard protection logic with any chosen characteristic quantity (measured or calculated quantity). The standard logic consists of the usual protection elements such as the pickup set point, the set delay time, the TRIP command, a block function, etc. The mode of operation for current, voltage, power and power factor quantities can be three-phase or single-phase. Almost all quantities can be operated with ascending or descending pickup stages (e.g. under and overvoltage). All stages operate with protection priority.

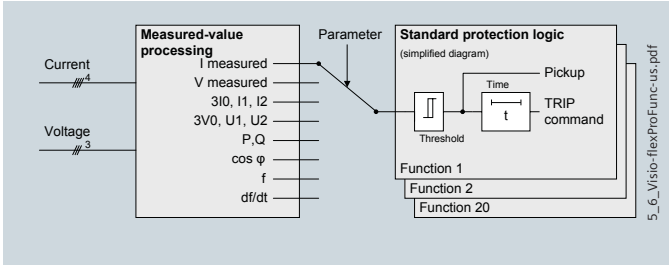

Fig. 5/6 Flexible protection function

Protection functions/stages available are based on the available measured analog quantities:

Function	ANSI
$I>$, $I_E>$	50, 50N
$V<$, $V>$, $V_E>$	27, 59, 59N
$3I_0>$, $I_1>$, $I_2>$, $I_2/I_1>$, $3V_0>$, $V_1><$, $V_2><$	50N, 46, 59N, 47
$P><$, $Q><$	32
cos φ	55
$f><$	81O, 81U
$df/dt><$	81R

Table 5/3 Available flexible protection functions

For example, the following can be implemented:

- Reverse power protection (ANSI 32R)
- Rate-of-frequency-change protection (ANSI 81R).

Trip circuit supervision (ANSI 74TC)

One or two binary inputs can be used for monitoring the circuit-breaker trip coil including its incoming cables. An alarm signal is generated whenever the circuit is interrupted.

5

Lockout (ANSI 86)

All binary output statuses can be memorized. The LED reset key is used to reset the lockout state. The lockout state is also stored in the event of supply voltage failure. Reclosure can only occur after the lockout state is reset.

Thermal overload protection (ANSI 49)

To protect cables and transformers, an overload protection function with an integrated warning/alarm element for temperature and current can be used. The temperature is calculated using a thermal homogeneous body model (per IEC 60255-8), it considers the energy entering the equipment and the energy losses. The calculated temperature is constantly adjusted according to the calculated losses. The function considers loading history and fluctuations in load.

Settable dropout delay times

If the relays are used in conjunction with electromechanical relays, in networks with intermittent faults, the long dropout times of the electromechanical relay (several hundred milliseconds) can lead to problems in terms of time coordination/grading. Proper time coordination/grading is only possible if the dropout or reset time is approximately the same. This is why the parameter for dropout or reset times can be defined for certain functions, such as overcurrent protection, ground short-circuit and phase-balance current protection.

Undercurrent monitoring (ANSI 37)

A sudden drop in current, which can occur due to a reduced load, is detected with this function. This may be due to shaft that breaks, no-load operation of pumps or fan failure.

Overvoltage protection (ANSI 59)

The two-element overvoltage protection detects unwanted network and machine overvoltage conditions. The function can operate either with phase-to-phase, phase-to-ground, positive phase-sequence or negative phase-sequence voltage. Three-phase and single-phase connections are possible.

Undervoltage protection (ANSI 27)

The two-element undervoltage protection provides protection against dangerous voltage drops (especially for electric machines). Applications include the isolation of generators or motors from the network to avoid undesired operating conditions and a possible loss of stability. Proper operating conditions of electrical machines are best evaluated with the positive-sequence quantities. The protection function is active over a wide frequency range (45 to 55, 55 to 65 Hz). Even when falling below this frequency range the function continues to work, however, with decreased accuracy. The function can operate either with phase-to-phase, phase-to-ground or positive phase-sequence voltage, and can be monitored with a current criterion. Three-phase and single-phase connections are possible.

Frequency protection (ANSI 81O/U)

Frequency protection can be used for overfrequency and underfrequency protection. Electric machines and parts of the system are protected from unwanted frequency deviations. Unwanted frequency changes in the network can be detected and the load can be removed at a specified frequency setting. Frequency protection can be used over a wide frequency range (40 to 60 (for 50 Hz), 50 to 70 (for 60 Hz)). There are four elements (individually set as overfrequency, underfrequency or OFF) and each element can be delayed separately. Blocking of the frequency protection can be performed by activating a binary input or by using an undervoltage element.

Fault locator (ANSI FL)

The integrated fault locator calculates the fault impedance and the distance to fault. The results are displayed in Ω, kilometers (miles) and in percent of the line length.

Customized functions (ANSI 32, 51V, 55 etc.)

Additional functions, which are not time critical, can be implemented using the CFC measured values. Typical functions include reverse power, voltage controlled overcurrent, phase angle detection, and zero-sequence voltage detection.

Futher Functions

Measured values

The r.m.s. values are calculated from the acquired current and voltage along with the power factor, frequency, active and reactive power. The following functions are available for measured value processing:

- Currents I_{L1}, I_{L2}, I_{L3}, I_N, I_{EE}
- Voltages V_{L1}, V_{L2}, V_{L3}, V_{12}, V_{23}, V_{31}
- Symmetrical components I_1, I_2, $3I_0$; V_1, V_2, $3V_0$
- Power Watts, Vars, VA/P, Q, S
  (P, Q: total and phase selective)
- Power factor cos φ (total and phase selective)
- Frequency
- Energy ± kWh, ± kVarh, forward and reverse power flow
- Mean as well as minimum and maximum current and voltage values
- Operating hours counter
- Mean operating temperature of the overload function
- Limit value monitoring
  Limit values can be monitored using programmable logic in the CFC. Commands can be derived from this limit value indication.
- Zero suppression
  In a certain range of very low measured values, the value is set to zero to suppress interference.

Metered values

For internal metering, the unit can calculate an energy metered value from the measured current and voltage values. If an external meter with a metering pulse output is available, the SIPROTEC 7SJ81 can obtain and process metering pulses through an indication input. The metered values can be displayed and passed on to a control center as an accumulated value with reset. A distinction is made between forward, reverse, active and reactive energy.

Circuit-breaker wear monitoring/ circuit-breaker remaining service life

Methods for determining circuit-breaker contact wear or the remaining service life of a circuit-breaker (CB) allow CB maintenance intervals to be aligned to their actual degree of wear. The benefit lies in reduced maintenance costs.

There is no exact mathematical method to calculate the wear or the remaining service life of a circuit-breaker that takes arc-chamber's physical conditions into account when the CB opens.

This is why various methods of determining CB wear have evolved which reflect the different operator philosophies. To do justice to these, the relay offers several methods:

- ΣI
- ΣI^x, with x = 1..3
- Σi^2t.

The devices also offer a new method for determining the remaining service life:

- Two-point method.

The CB manufacturers double-logarithmic switching cycle diagram (see Fig. 5/7) and the breaking current at the time of contact opening serve as the basis for this method. After CB opening, the two-point method calculates the remaining number of possible switching cycles. Two points P1 and P2 only have to be set on the device. These are specified in the CB's technical data.

All of these methods are phase-selective and a limit value can be set in order to obtain an alarm if the actual value falls below or exceeds the limit value during determination of the remaining service life.

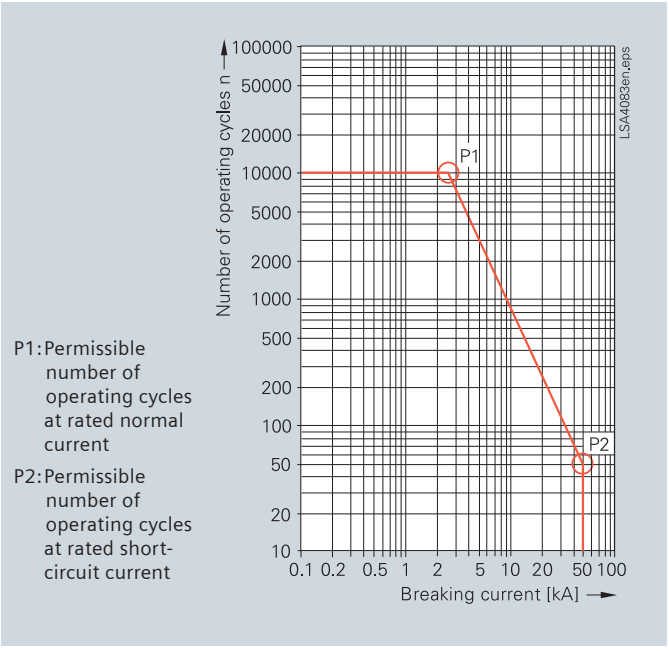

Fig. 5/7 Permissible number of operating cycles as a function of breaking current

Commissioning

Commissioning could not be easier and is supported by DIGSI 4. The status of the binary inputs can be read individually and the state of the binary outputs can be set individually. The operation of switching elements (circuit-breakers, disconnect devices) can be checked using the switching functions of the relay. The analog measured values are represented as wide-ranging operational measured values. To prevent transmission of information to the control center during maintenance, the communications can be disabled to prevent unnecessary data from being transmitted. During commissioning, all indications with test tag for test purposes can be connected to a control and protection system.

Test operation

During commissioning, all indications with test tag can be passed to a control system for test purposes.

Radial systems

General hints:
The relay at the far end (D) from the infeed has the shortest tripping time. Relays further upstream have to be time-graded against downstream relays in steps of about 0.3 s.

1) Auto-reclosure (ANSI 79) only with overhead lines
2) Unbalanced load protection (ANSI 46) as backup protection against asymmetrical faults

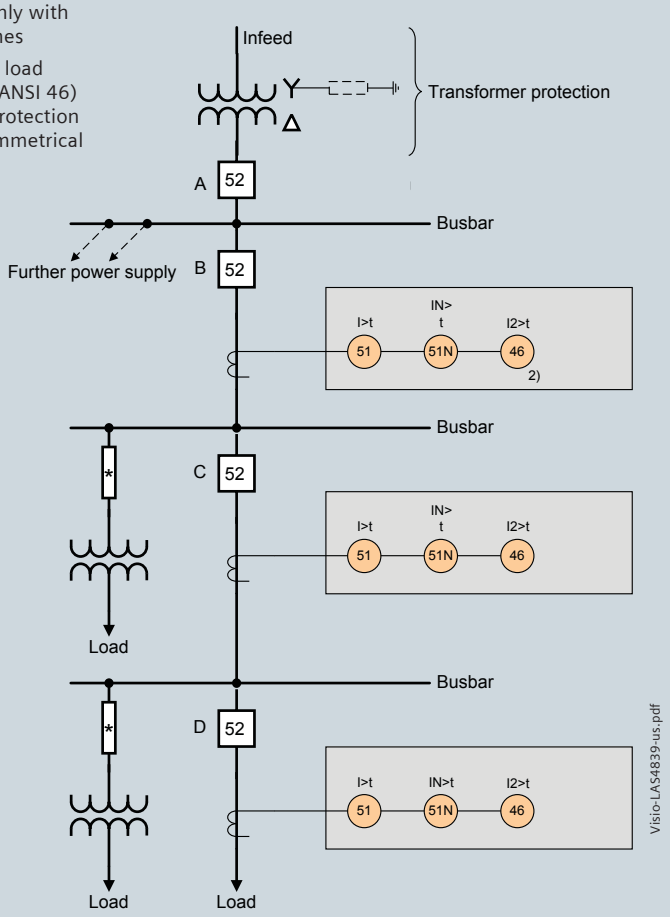

Fig. 5/8 Protection concept with overcurrent protection

Earth-fault detection in isolated or compensated systems

In isolated or compensated systems, an occurred earth fault can be easily found by means of sensitive directional earth-fault detection.

1) The sensitive current measurement of the earth current should be made by a zero-sequence low-power current transformer

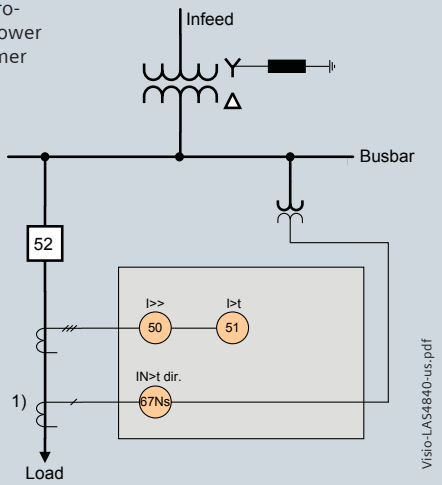

Fig. 5/9 Protection concept for directional earth-fault detection

Ring-main cable

With the directional comparison protection, 100% of the line can be protected via instantaneous tripping in case of infeed from two sources (ring-main cable).

For lines with infeed from two sources, no selectivity can be achieved with a simple definite-time overcurrent protection. Therefore, the directional definite-time overcurrent protection must be used. A non-directional definite-time overcurrent protection is enough only in the corresponding busbar feeders. The grading is done from the other end respectively.

Advantage:	100% protection of the line via instantaneous tripping, and easy setting.
Disadvantage:	Tripping times increase towards the infeed.

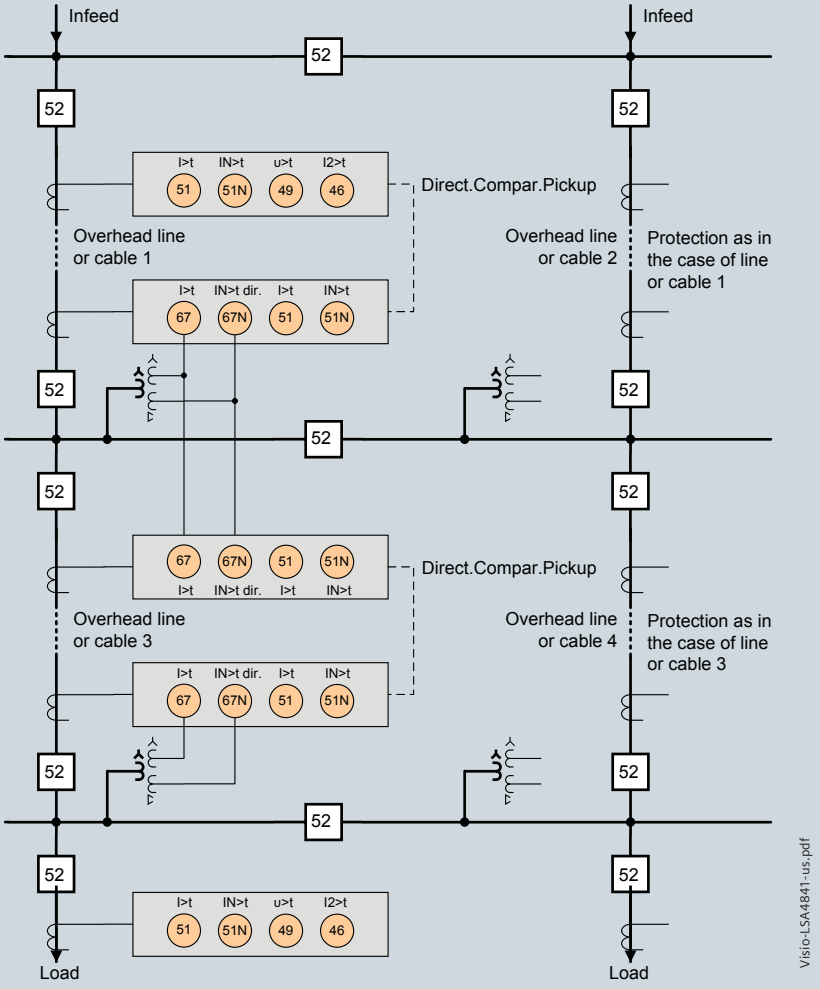

Fig. 5/10 Protection concept of ring power systems

Busbar protection by overcurrent relays with reverse interlocking

Applicable to distribution busbars without substantial (< 0.25 x I_N) backfeed from the outgoing feeders.

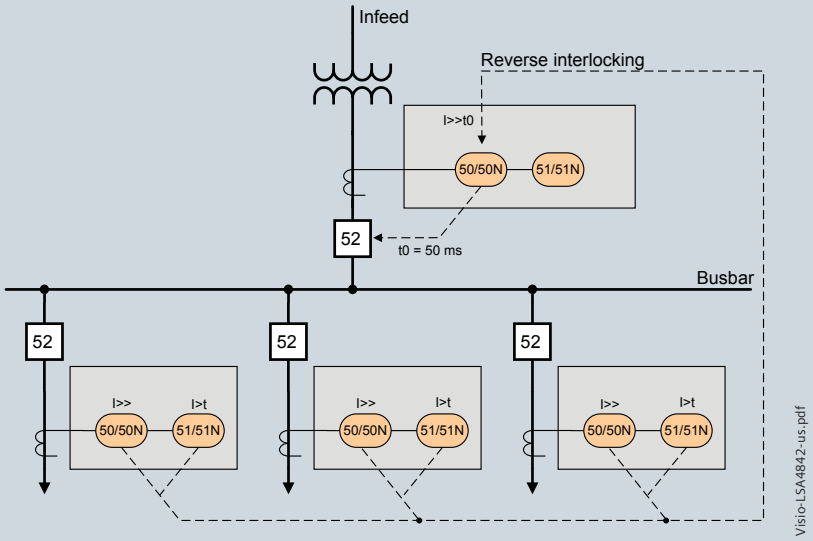

Fig. 5/11 Busbar protection via overcurrent relays with reverse interlocking

Line feeder with load shedding

In unstable power systems (e.g. solitary systems, emergency power supply in hospitals), it may be necessary to isolate selected consumers from the power system in order to protect the overall system. The overcurrent-time protection functions are effective only in the case of a short-circuit.

Overloading of the generator can be measured as a frequency or voltage drop.

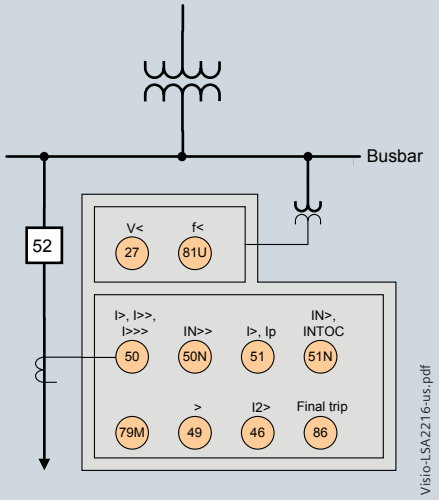

Fig. 5/12 Line feeder with load shedding

Automatic reclosing

The auto-reclosure function (AR) has starting and blocking options. In the opposite example, the application of the blocking of the high-current stages is represented according to the reclosing cycles. The overcurrent-time protection is graded (stages I, Ip) according to the grading plan. If an auto-reclosure function is installed in the incoming supply of a feeder, first of all the complete feeder is tripped instantaneously in case of fault. Arc faults will be extinguished independently of the fault location. Other protection relays or fuses do not trip (fuse saving scheme). After successful auto-reclosure, all consumers are supplied with energy again. If there is a permanent fault, further reclosing cycles will be performed. Depending on the setting of the AR, the instantaneous tripping stage in the infeed is blocked in the first, second or third cycle, i.e., now the grading is effective according to the grading plan. Depending on the fault location, overcurrent relays with faster grading, fuses, or the relay in the infeed will trip. Only the part of the feeder with the permanent fault will be shut down definitively.

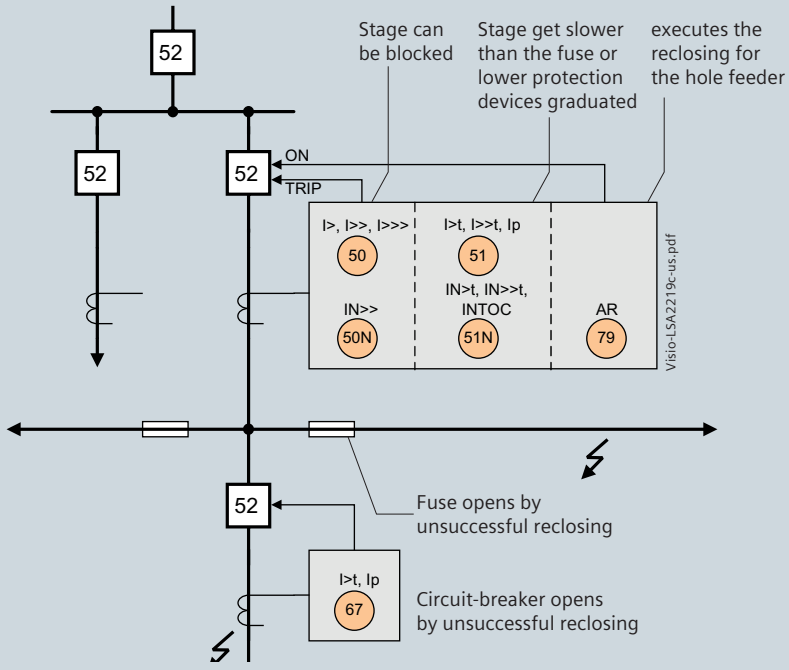

Fig. 5/13 Automatic reclosing

Reverse power protection with parallel infeeds

If a busbar is supplied by two parallel infeeds and there is a fault in one of the infeeds, the affected busbar shall be selectively shut down, so that supply to the busbar is still possible through the remaining infeed. To do this, directional devices are required, which detect a short circuit from the busbar towards the infeed. In this context, the directional time-overcurrent protection is normally adjusted over the load current. Low-current faults cannot be shut down by this protection. The reverse power protection can be adjusted far below rated power, and is thus also able to detect reverse power in case of low-current faults far below the load current. The reverse power protection is implemented through the “flexible protection functions”.

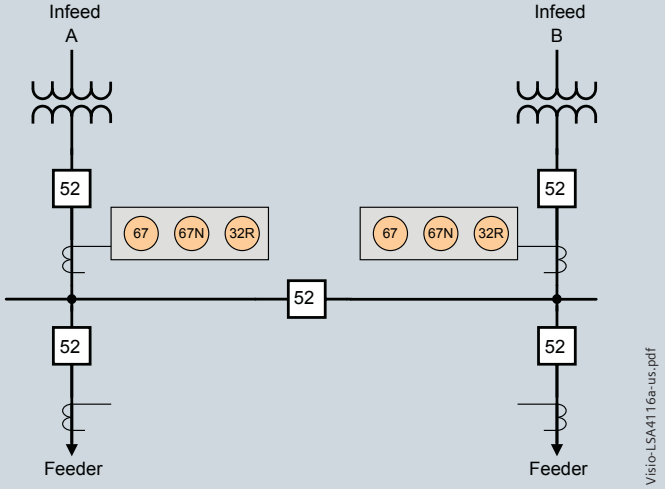

Fig. 5/14 Reverse power protection with parallel infeeds

Overcurrent Protection SIPROTEC 7SJ81

for Low-Power CT and VT Applications – Selection and ordering data

Description	Order No. 1 2 3 4 5 6 7 8 9 10 11 12 13 14 15 16 17 18 19	Short code
	7SJ81 ☐ 3 - ☐☐☐☐☐ - 3 ☐☐☐ - ☐☐☐	
Measuring inputs, binary inputs and outputs		
Housing 1/6 19"; 4 x *I*, 3 BI, 5 BO (2 Changeover), 1 life contact	1	
Housing 1/6 19"; 4 x *I*, 7 BI, 8 BO (2 Changeover), 1 life contact	2	
Housing 1/6 19"; 4 x *I*, 3 x V, 3 BI, 5 BO (2 Changeover), 1 life contact	3	
Housing 1/6 19"; 4 x *I*, 3 x V, 7 BI, 8 BO (2 Changeover), 1 life contact	4	
Low Power Measuring Inputs	3	
Auxiliary voltage		
DC 24 V / 48 V	1	
DC 60 V / 110 V / 125 V / 220 V / 250 V, AC 115 V / 230 V	5	
Construction		
Flush mounting housing, screw-type terminal	E	
Region-specific default- and language settings		
Region DE, IEC, language German (language changeable)	A	
Region World, IEC/ANSI, language English (language changeable)	B	
Port B (at bottom of device, rear)		
No port	0	
IEC 60870-5-103 or DIGSI 4/modem, electrical RS232	1	
IEC 60870-5-103 or DIGSI 4/modem, electrical RS485	2	
IEC 60870-5-103 or DIGSI 4/modem, optical 820 nm, ST connector	3	
		L 0 ☐
PROFIBUS DP slave, electrical RS485	9	A
PROFIBUS DP slave, optical, double ring, ST connector	9	B
MODBUS, electrical RS485	9	D
MODBUS, optical 820 nm, ST connector	9	E
DNP 3.0, electrical RS485	9	G
DNP 3.0, optical 820 nm, ST connector	9	H
IEC 60870-5-103, redundant, electrical RS485, RJ45 connector	9	P
IEC 61850, 100 Mbit Ethernet, electrical, double, RJ45 connector	9	R
IEC 61850, 100 Mbit Ethernet, optical, double, LC connector	9	S
Port A (at bottom of device, in front)		
No Port	0	
With Ethernet interface (DIGSI, not IEC 61850), RJ45 connector	6	
Measuring/fault recording		
With fault recording, average values, min/max values	3	

You will find a detailed overview of the technical data (extract of the manual) under: http://www.siemens.com/siprotec

Description		Order No. / Short code
		1 2 3 4 5 6 7 8 9 10 11 12 13 14 15 16 17 18 19 7SJ81☐ 3 - ☐☐☐☐☐ - 3☐☐ ☐ - ☐☐☐
Basic Functionality		F A [2]
50/51	Definite/Inverse time-overcurrent protection, phase $I>$, $I>>$, $I>>>$, I_p	
50N/51N	Instantaneous/Inverse time-overcurrent protection, ground $I_E>$, $I_E>>$, $I_E>>>$, I_{Ep}	
50N(s)/51N(s) [1]	Sensitive ground-current protection $I_{EE}>$, $I_{EE}>>$, I_{EEp}	
49	Overload protection	
74TC	Trip circuit supervision	
50BF	Circuit-breaker failure protection	
46	Unbalanced-load protection	
37	Undercurrent, underpower	
86	Lockout	
	Parameter changeover	
	Monitoring functions	
	Control of circuit-breaker	
	Flexible protection functions (current parameters)	
	Inrush restraint	
Basic functionality + Directional phase & ground overcurrent, directional sensitive ground fault, voltage and frequency protection		F C [3]
67	Directional overcurrent protection phase $I>$,$I>>$, I_p	
67N	Directional overcurrent protection ground $I_E>$, $I_E>>$, I_{Ep}	
67Ns [1]	Directional sensitive ground fault protection $I_{EE}>$, $I_{EE}>>$, I_{EEp}	
59N	Displacement voltage	
27/59	Under/Overvoltage	
81U/O	Under/Overfrequency f<, f>	
47	Phase rotation	
	Flexible protection functions (current and voltage parameters):	
	Protective function for voltage, power	
32/55/81R	power factor, frequency change	
Automatic Reclosing (AR), Fault Locator (FL)		
	Without	0
79	With AR	1
FL [3]	With FL	2
79/FL [3]	With AR and FL	3

1) Depending on the connected low-power ground current transformer the function will be either sensitive (I_{Ns}) or non-sensitive (I_N)

2) Only if position 6 = **1** or **2**

3) Only if position 6 = **3** or **4**

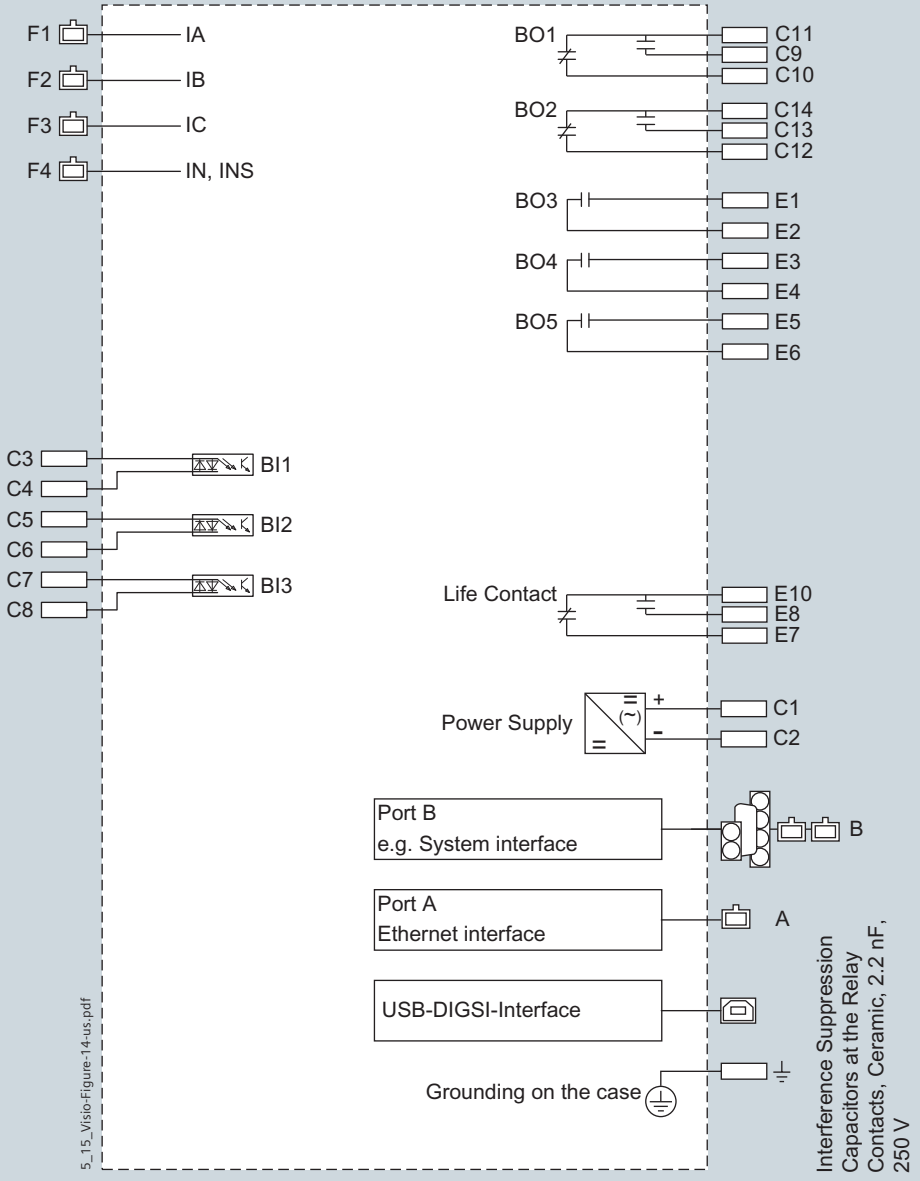

Fig. 5/15 Connection diagram for SIPROTEC 7SJ811

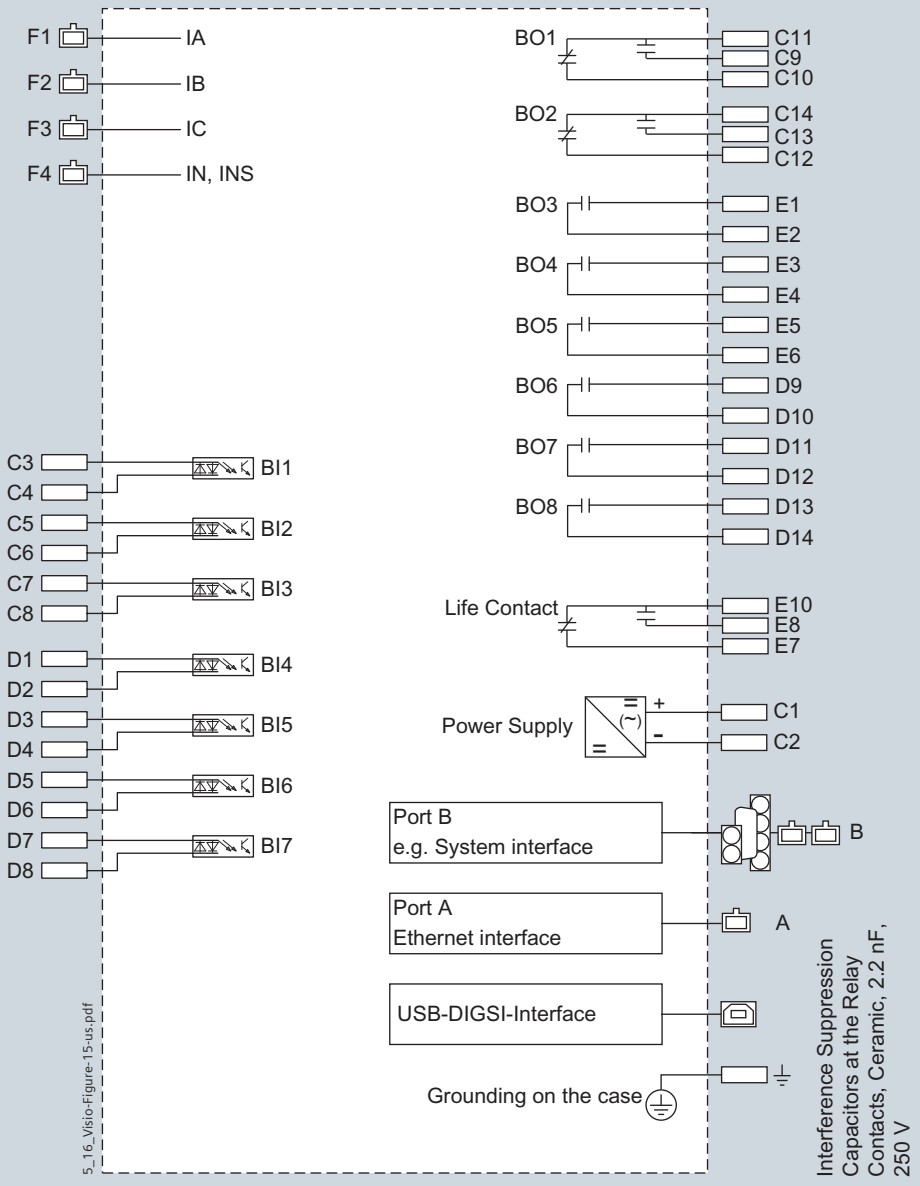

Fig. 5/16 Connection diagram for SIPROTEC 7SJ812

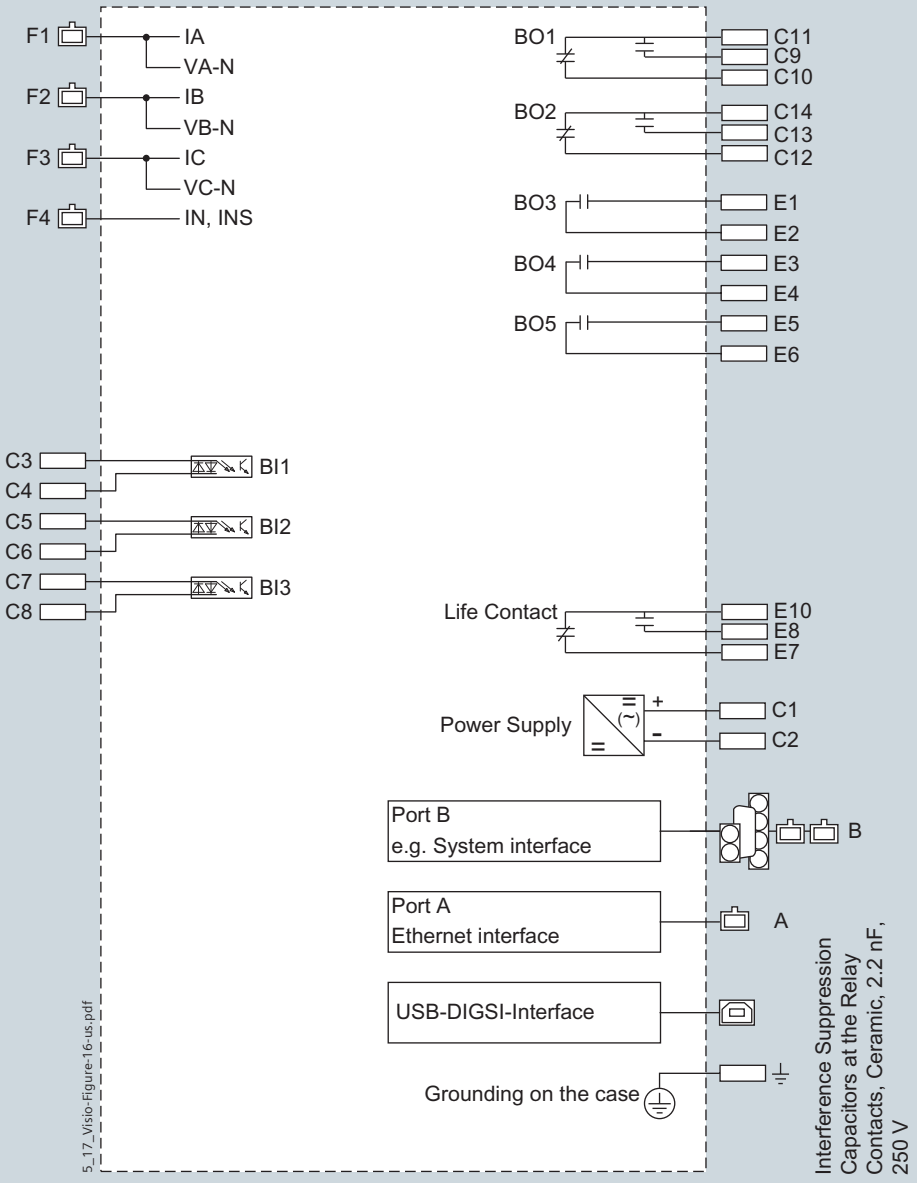

Fig. 5/17 Connection diagram for SIPROTEC 7SJ813

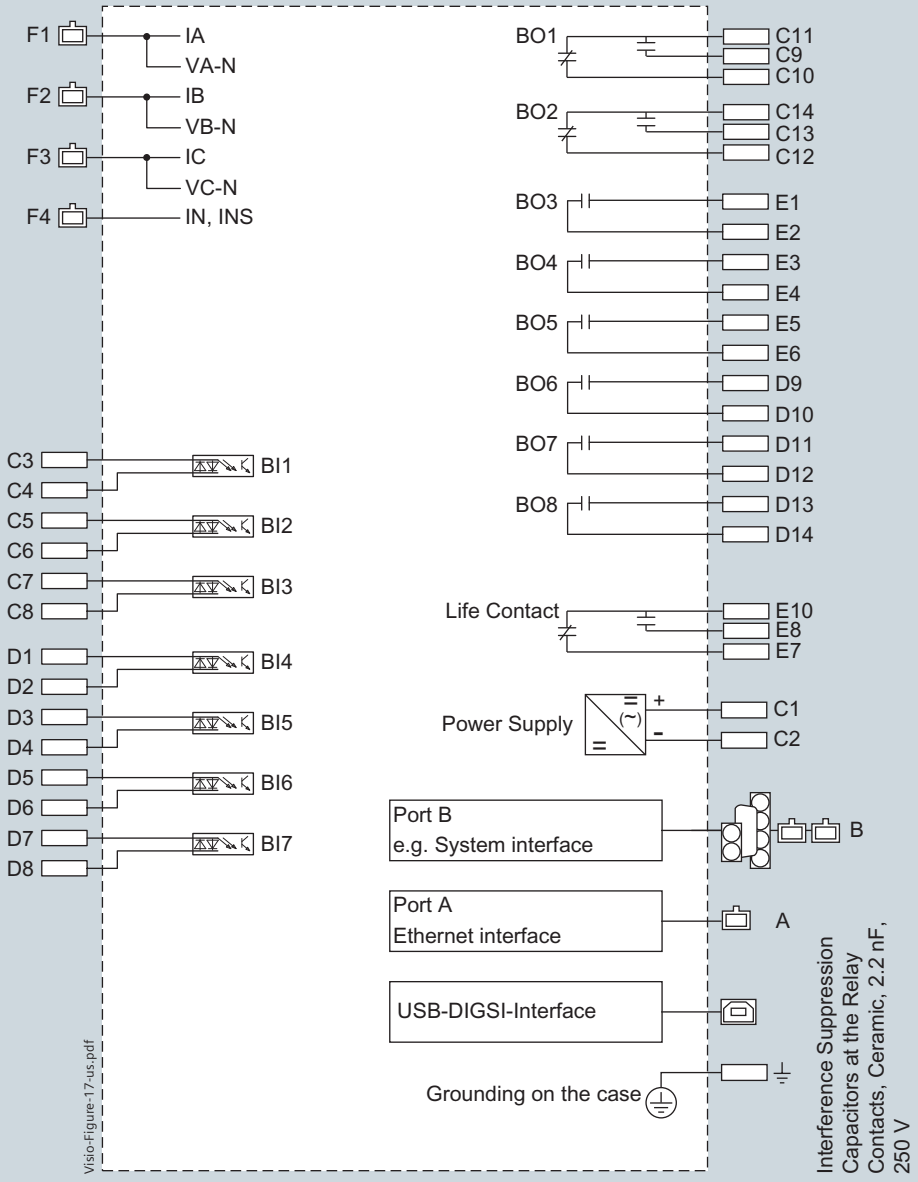

Fig. 5/18 Connection diagram for SIPROTEC 7SJ814

for Low-Power CT and VT Applications – Connection example

Standard connection capabilities

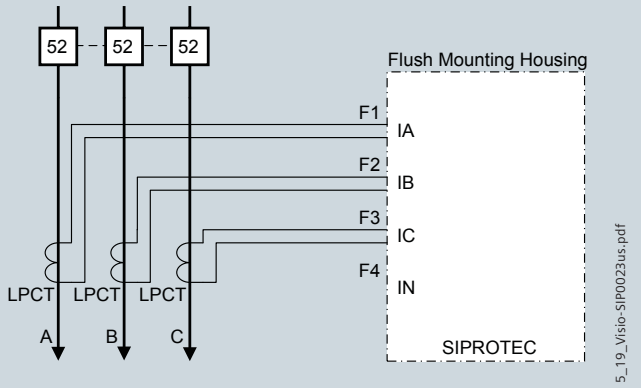

Fig. 5/19 Connection to three low power CTs, normal circuit layout - appropriate for all networks

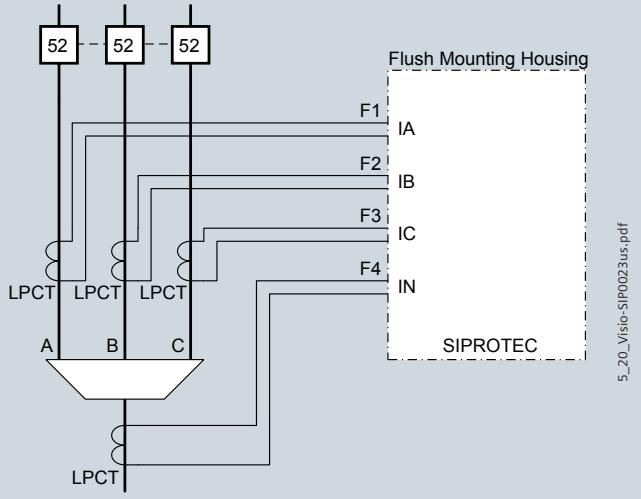

Fig. 5/20 Connection to 3 low-power CTs - additional low-power CT for sensitive ground fault detection I_{NS} - only for isolated or compensated networks

Standard connection capabilities

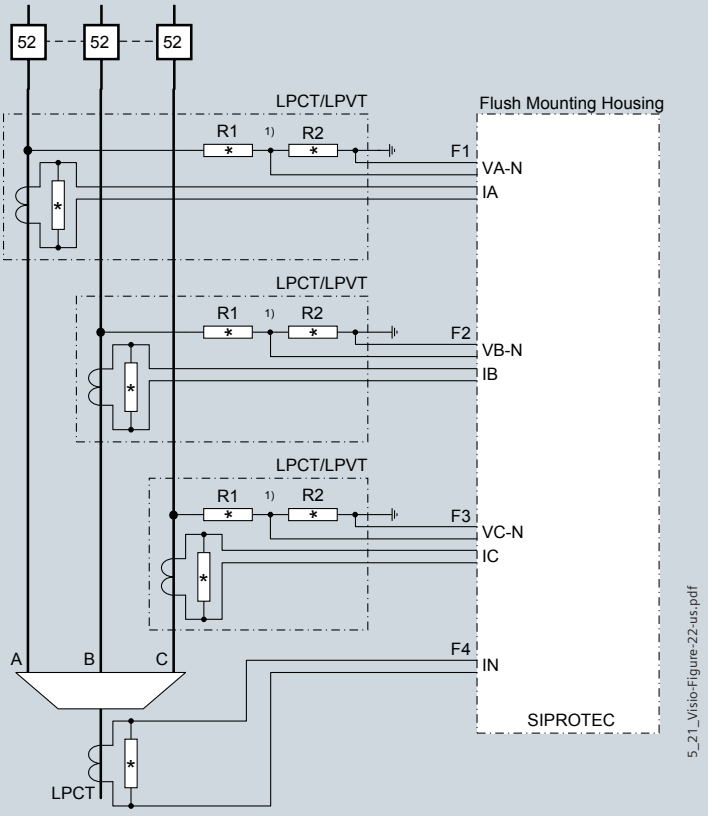

1) R1 and R2 represent the primary voltage divider.

Important! Cable Shield Grounding must be done on the Cable Side!

Fig. 5/21 Connection for combined low-power current and voltage transformers in phase L1, L2 and L3

for Low-Power CT and VT Applications – Connection example

Standard connection capabilities

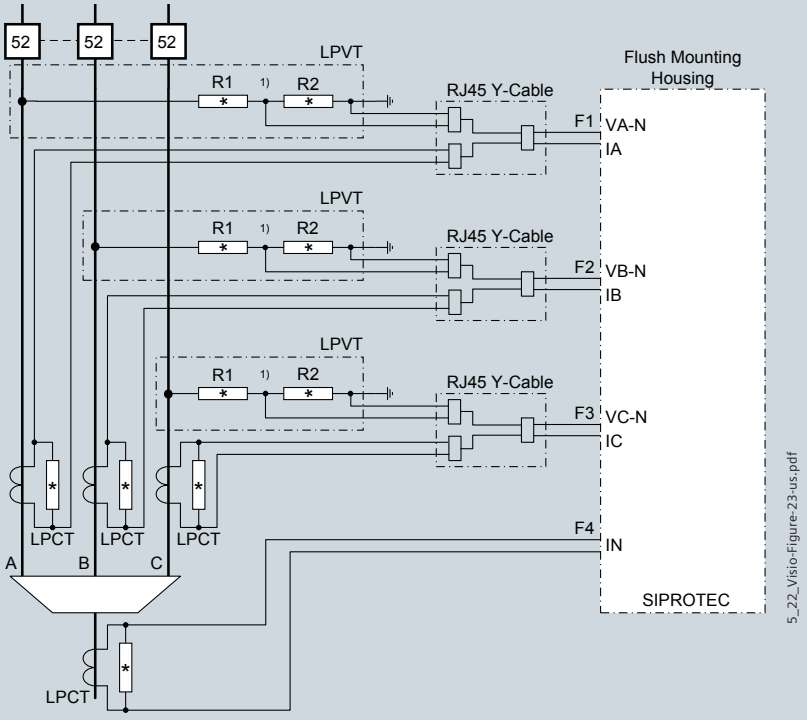

1) R1 and R2 represent the primary voltage divider.

Important! Cable Shield Grounding must be done on the Cable Side!

Fig. 5/22 Connection to low-power transformers for 3 phase currents, sensitive ground current INS and 3 phase-to-ground-voltages. The LPCT and the LPVT are connected to SIPROTEC 7SJ81 through a Y-cable (refer to Fig. 2/23)

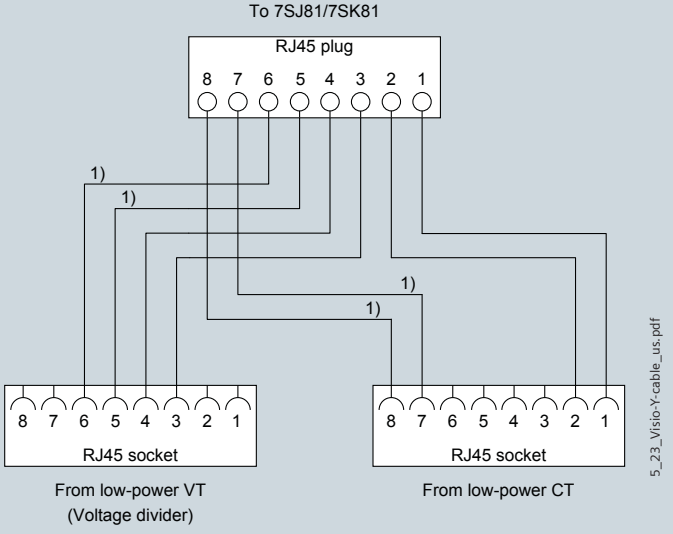

1) The connections 5, 6, 7 and 8 are optional, but not mandatory.

Fig. 5/23 Y-cable for a connection of LPCT and LPVT with SIPROTEC 7SJ81

SIEMENS



Generator and Motor Protection 7SK80 SIPROTEC Compact

	Page
Description	6/3
Function overview	6/4
Applications	6/5
Application sheets	6/6
Application examples	6/12
Selection and ordering data	6/16
Connection diagrams	6/18
Connection examples	6/24
Connection types	6/27

You will find a detailed overview of the technical data (extract of the manual) under:
http://www.siemens.com/siprotec

Description

The SIPROTEC 7SK80 is a multi-functional motor protection relay. It is designed for protection of asynchronous motors of all sizes. The relays have all the required functions to be applied as a backup relay to a transformer differential relay.

The SIPROTEC 7SK80 features “flexible protection functions”. Up to 20 additional protection functions can be created by the user.

Therefore protection of change for frequency or reverse power protection can be realized, for example.

The relay provides circuit-breaker control, further switching devices and automation functions. The integrated programmable logic (CFC) allows the user to add own functions, e.g. for the automation of switchgear (interlocking). The user is also allowed to generate user-defined messages.

Highlights

- Pluggable current and voltage terminals
- Binary input thresholds settable using DIGSI (3 stages)
- Secondary current transformer values (1 A / 5 A) settable using DIGSI
- 9 programmable function keys
- 6-line display
- Buffer battery exchangeable from the front
- USB front port
- 2 additional communication ports
- Integrated switch for low-cost and redundant optical Ethernet rings
- Ethernet redundancy protocols RSTP, PRP and HSR for highest availability
- Relay-to-relay communication through Ethernet with IEC 61850 GOOSE
- Millisecond-accurate time synchronization through Ethernet with SNTP (over Port A or Port B)
- Number of binary binputs and inary outputs by connection from up to two SICAM I / O-Units extendable.



Fig. 6/1 SIPROTEC 7SK80 front view



Fig. 6/2 SIPROTEC 7SK80 rear view

Function overview

Protection functions	IEC	ANSI
Definite and inverse time-overcurrent protection (phase / ground)	$I>$, $I>>$, $I>>>$, $I_E>$, $I_E>>$, $I_E>>>$; I_p, I_{Ep}	50, 50N; 51, 51N
Directional time-overcurrent protection, ground	$I_{E\ dir}>$, $I_{E\ dir}>>$, $I_{Ep\ dir}$	67N
Directional overcurrent protection, ground (definite / inverse)	$I_{EE}>$, $I_{EE}>>$, I_{EEp}	67Ns, 50Ns
Displacement voltage, zero-sequence voltage	V_E, $V_0>$	59N
Trip-circuit supervision	AKU	74TC
Undercurrent monitoring	$I<$	37
Temperature monitoring		38
Thermal overload protection	$\vartheta>$	49
Load jam protection		51M
Locked rotor protection		14
Intermittent ground fault protection	IIE>	
Directional intermittent ground fault protection	IIEdir>	67Ns
Overcurrent protection, voltage controlled		51V
Restart inhibit		66 / 86
Undervoltage / overvoltage protection	$V<$, $V>$	27 / 59
Forward power supervision, reverse power protection	$P<>$, $Q<>$	32
Power factor	cos φ	55
Overfrequency / underfrequency protection	$f<$, $f>$	81O / U
Circuit-breaker failure protection		50BF
Phase-balance current protection (negative-sequence protection)	$I_2>$	46
Unbalance-voltage protection and / or phase-sequence monitoring	$V_2>$, *phase sequence*	47
Start-time supervision		48
Lockout		86
Rate-of-frequency-change protection	df/dt	81R
Rate-of-voltage-change protection	dU/dt	27R, 59R

Table 6/1 Funktionsübersicht

Control functions / programmable logic

- Commands for the ctrl. of CB, disconnect switches (isolators / isolating switches)
- Control through keyboard, binary inputs, DIGSI 4 or SCADA system
- User-defined PLC logic with CFC (e.g. interlocking).

Monitoring functions

- Operational measured values *V, I, f*
- Energy metering values W_p, W_q
- Circuit-breaker wear monitoring
- Minimum and maximum values
- Trip-circuit supervision
- Fuse failure monitor
- 8 oscillographic fault records
- Motor statistics.

ATEX100-certification

The Device is available with ATEX100-certification for protection of explosion-proved machines of increased-safety type "e"

Communication interfaces

- System / service interface
  - IEC 61850 Edition 1 and 2
  - IEC 60870-5-103 and IEC 60870-5-104
  - PROFIBUS-DP
  - DNP 3.0
  - MODBUS RTU
  - DNP3 TCP
  - PROFINET
  - Ethernet redundancy protocols RSTP, PRP and HSR
- Ethernet interface for DIGSI 4, and extension from up to two SICAM I / O-Units 7XV5673 as well as a RTD box
- USB front interface for DIGSI 4.

Hardware

- 4 current transformers
- 0 / 3 voltage transformers
- 3 / 7 binary inputs (thresholds configurable using software)
- 5 / 8 binary outputs (2 changeover)
- 0 / 5 RTD inputs
- 1 life contact
- Pluggable current and voltage terminals.

The SIPROTEC 7SK80 unit is a numerical motor protection relay that can perform control and monitoring functions and therefore provide the user with a cost-effective platform for power system management, that ensures reliable supply of electrical power to the customers. The ergonomic design makes control easy from the relay front panel. A large, easy-to-read display was a key design factor.

Control

The integrated control function permits control of disconnect devices, grounding switches or circuit-breakers through the integrated operator panel, binary inputs, DIGSI 4 or the control or automation system (e.g. SICAM).

Programmable logic

The integrated logic characteristics (CFC) allow the user to add own functions for automation of switchgear (e.g. interlocking) or switching sequence. The user can also generate user-defined messages. This functionality can form the base to create extremely flexible transfer schemes.

Operational measured value

Extensive measured values (e.g. I, V), metered values (e.g.Wp,Wq) and limit values (e.g. for voltage, frequency) provide improved system management.

Operational indication

Event logs, trip logs, fault records and statistics documents are stored in the relay to provide the user or operator with all the key data required to operate modern substations.

Motor protection

The SIPROTEC 7SK80 device is specifically designed to protect induction-type asynchronous motors.

Line protection

SIPROTEC 7SK80 units can be used for line protection of high and medium-voltage networks with grounded, low-resistance grounded, isolated or a compensated neutral point.

Transformer protection

The SIPROTEC 7SK80 device provides all the functions for backup protection for transformer differential protection. The inrush suppression effectively prevents unwanted trips that can be caused by inrush currents.

Backup protection

As a backup protection the SIPROTEC 7SK80 devices are universally applicable.

Switchgear cubicles for high / medium voltage

All units are designed specifically to meet the requirements of high / medium-voltage applications. In general, no separate measuring instruments (e.g., for current, voltage, frequency, ...) or additional control components are necessary.

6

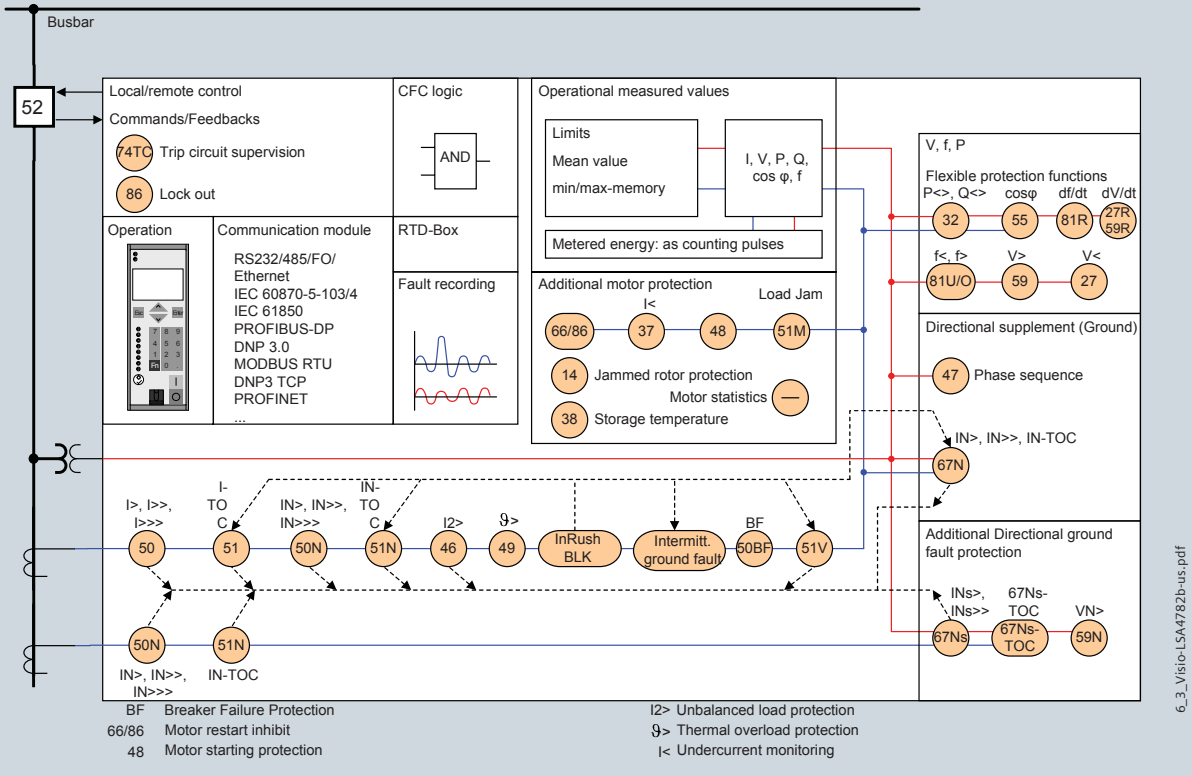

Fig. 6/3 Function diagram

Protection functions

Overcurrent protection (ANSI 50, 50N, 51, 51N, 51V)

This function is based on the phase selective measurement of the three phase currents and the ground current (four transformers). Three definite time-overcurrent protection elements (DMT) are available both for the phase and the ground elements. The current threshold and the delay time can be set in a wide range.

Inverse time-overcurrent protection characteristics (IDMTL) can also be selected and activated. The inverse-time function provides – as an option – voltage-restraint or voltage-controlled operating modes

Reset characteristics

Time coordination with electromechanical relays are made easy with the inclusion of the reset characteristics according to ANSI C37.112 and IEC 60255-3 / BS 142 standards. When using the reset characteristic (disk emulation), the reset process is initiated after the fault current has disappeared. This reset process corresponds to the reverse movement of the Ferraris disk of an electromechanical relay (disk emulation).

Available inverse-time characteristics

Characteristics acc. to	IEC 60255-3	ANSI / IEEE
Inverse	•	•
Short inverse		•
Long inverse	•	•
Moderately inverse		•
Very inverse	•	•
Extremely inverse	•	•

Table 6/2 Available inverse-time characteristics

Inrush restraint

If second harmonic content is detected during the energization of a transformer, the pickup of stages $I>$, I_p, $I>_{ger}$ and $I_{p\ ger}$ is blocked.

Dynamic settings group switching

In addition to the static parameter changeover, the pickup thresholds and the tripping times for the directional and non-directional time-overcurrent protection functions can be changed over dynamically. As changeover criterion, the circuit-breaker position, the prepared auto-reclosure, or a binary input can be selected.

Directional overcurrent protection, ground (ANSI 67N)

Directional ground protection is a separate function. It operates in parallel to the non-directional ground overcurrent elements. Their pickup values and delay times can be set separately. Definite-time and inverse-time characteristics aroffered. The tripping characteristic can be rotated by 0 to ± 180 degrees.

For ground protection, users can choose whether the direction is to be calculated using the zero-sequence or negative-sequence system quantities (selectable). If the zero-sequence voltage tends to be very low due to the zero-sequence impedance it will be better to use the negative-sequence quantities.

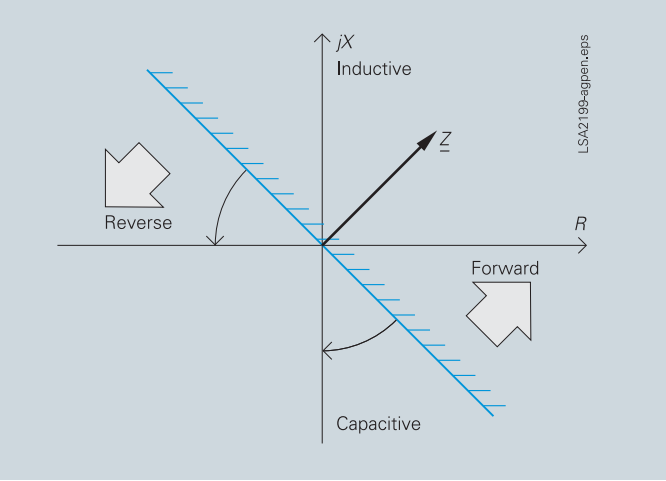

Fig. 6/4 Directional characteristic of the directional time-overcurrent protection, ground

(Sensitive) directional ground-fault detection (ANSI 59N / 64, 67Ns, 67N)

For isolated-neutral and compensated networks, the direction of power flow in the zero sequence is calculated from the zero-sequence current I0 and zero-sequence voltage V0. For networks with an isolated neutral, the reactive current component is evaluated; for compensated networks, the active current component or residual resistive current is evaluated. For special network conditions, e.g. high-resistance grounded networks with ohmic-capacitive ground-fault current or low-resistance grounded networks with ohmic-inductive current, the tripping characteristics can be rotated approximately ± 45 degrees (see Fig. 6 / 5).

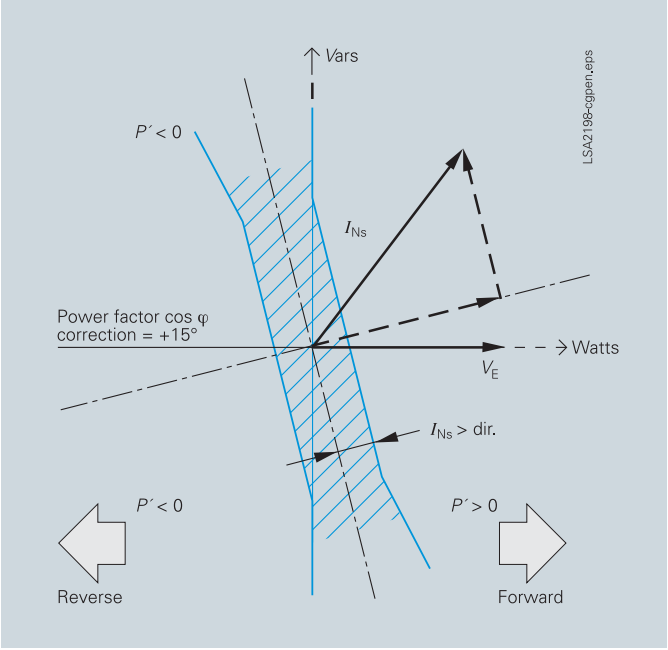

Fig. 6/5 Directional determination using cosine measurements for compensated networks

Two modes of ground-fault direction detection can be implemented: tripping or "signalling only mode".

It has the following functions:

- TRIP via the displacement voltage V_E
- Two instantaneous elements or one instantaneous plus one user-defined characteristic
- Each element can be set to forward, reverse or non-directional
- The function can also be operated in the insensitive mode as an additional short-circuit protection.

(Sensitive) ground-fault detection (ANSI 50Ns, 51Ns/50N, 51N)

For high-resistance grounded networks, a sensitive input transformer is connected to a phase-balance neutral current transformer (also called core-balance CT). The function can also be operated in the normal mode as an additional short-circuit protection for neutral or residual ground protection.

Intermittent ground fault protection

Intermittent (re-igniting) faults are caused by poor cable insulation or water ingress into cable joints. After some time, the faults extinguish automatically or they develop into permanent short circuits. During the intermitting, neutral point resistances in impedance grounded systems can suffer thermal overload.

The normal ground fault protection is not capable of reliably detecting and clearing the sometimes very short current pulses. The required selectivity for intermittent ground faults is achieved by summing up the times of the individual pulses and tripping after a (programmable) summation time has been reached. The pickup threshold I_{ie}> evaluates RMS values referred to 1 system period.

Directional intermittent ground fault protection (ANSI 67Ns)

The directional intermittent ground fault protection function has the task to selectively detect intermittent ground faults in resonant-grounded cable networks.

Intermittent ground faults in resonant-grounded cable networks are typically marked by the following properties:

- Very short high-current ground current impulse (up to several hundred amperes) with a duration of less than 1 ms.
- They are self-extinguishing and reignite – depending on the network conditions and fault characteristics – within a half period up to several periods.
- They can also develop into static faults over prolonged periods of time (many seconds up to minutes).

Such intermittent ground faults are typically caused by poor insulation, e.g. due to insufficient water insulation of old cables.

Ground fault functions based on measured values of the fundamental component are primarily designed for detection of static ground faults and they do not always show a correct behavior in the case of intermittent ground faults. The directional intermittent ground fault protection function evaluates specifically the ground current impulses and for the direction determination it refers them to zero voltage.

Negative-sequence system overcurrent protection (ANSI 46)

By measuring current on the high side of the transformer, the two-element phase-balance current/negative-sequence protection detects high-resistance phase-to-phase faults and phase-to-ground faults on the low side of a transformer (e.g. Dy 5). This function provides backup protection for high-resistance faults through the transformer.

Breaker failure protection (ANSI 50BF)

If a faulted portion of the electrical circuit is not disconnected when a trip command is issued to a circuit-breaker, another trip command can be initiated using the breaker failure protection which trips the circuit-breaker of an upstream feeder. Breaker failure is detected if, after a trip command is issued and the current keeps on flowing into the faulted circuit. It is also possible to make use of the circuit-breaker position contacts (52a or 52b) for indication as opposed to the current flowing through the circuit-breaker.

Flexible protection functions

SIPROTEC 7SK80 enables the user to easily add up to 20 additional protection functions. Parameter definitions are used to link standard protection logic with any chosen characteristic quantity (measured or calculated quantity). The standard logic consists of the usual protection elements such as the pickup set point, the set delay time, the TRIP command, a block function, etc. The mode of operation for current, voltage, power and power factor quantities can be three-phase or phase-selective. Almost all quantities can be operated with ascending or descending pickup stages (e.g. under and over- voltage). All stages operate with protection priority or speed.

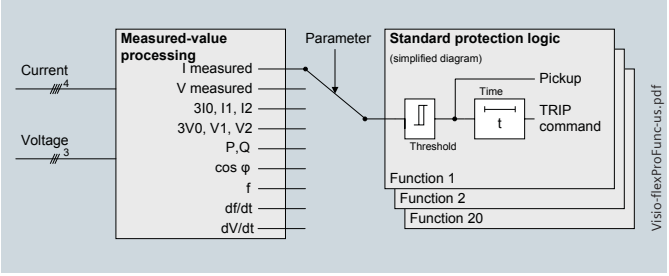

Fig. 6/6 Flexible protection functions

Protection functions / stages available are based on the available measured analog quantities:

Function	ANSI
$I>$, $I_E>$	50, 50N
$U<$, $U>$, $U_E>$	27, 59, 59N
$3I_0>$, $I_1>$, $I_2>$, $I_2/I_1>$, $3U_0>$, $V_1><$, $V_2><$	50N, 46, 59N, 47
$P><$, $Q><$	32
cos φ	55
$f><$	81O, 81U
$df/dt><$	81R
$dV/dt><$	27R, 59R

Table 6/3 Available flexible protection functions

For example, the following can be implemented:

- Reverse power protection (ANSI 32R)
- Rate-of-frequency-change protection (ANSI 81R).
- Rate-of-voltage-change protection (ANSI 27R, 59R).

Trip circuit supervision (ANSI 74TC)

One or two binary inputs can be used for monitoring the circuit-breaker trip coil including its incoming cables. An alarm signal is generated whenever the circuit is interrupted.

Lockout (ANSI 86)

All binary output statuses can be memorized. The LED reset key is used to reset the lockout state. The lockout state is also stored in the event of supply voltage failure. Reclosure can only occur after the lockout state is reset.

Thermal overload protection (ANSI 49)

To protect cables and transformers, an overload protection function with an integrated warning / alarm element for temperature and current can be used. The temperature is calculated using a thermal homogeneous body model (per IEC 60255-8), it considers the energy entering the equipment and the energy losses. The calculated temperature is constantly adjusted according to the calculated losses. The function considers loading history and fluctuations in load.

Protection of motors requires an additional time constant. This is used to accurately determine the thermal heating of the stator during the running and motor stopped conditions

The ambient temperature or the temperature of the coolant can be detected either through internal RTD inputs or via an external RTD-box.

The thermal replica of the overload function is automatically adapted to the ambient conditions.If neither internal RTD inputs nor an external RTD-box exist,
it is assumed that the ambient temperatures are constant.

Settable dropout delay times

If the relays are used in conjunction with electromechanical relays, in networks with intermittent faults, the long dropout times of the electromechanical relay (several hundred milliseconds) can lead to problems in terms of time coordination / grading. Proper time coordination / grading is only possible if the dropout or reset time is approximately the same. This is why the parameter for dropout or reset times can be defined for certain functions, such as overcurrent protection, ground short-circuit and phase-balance current protection.

Motor protection

Restart inhibit (ANSI 66/86)

If a motor is subjected to many successive starts, the rotor windings or rotor bars can be heated up to a point where the electrical connections between the rotor bars and the end rings are damaged. As it is not possible to physically measure the heat of the rotor we need to determine the heat by measuring the current the rotor is drawing through the stator to excite the rotor. A thermal replica of the rotor is established using a I_2t curve. The restart inhibit will block the user from starting the motor if the relay determined that the rotor reached a temperature that will damage the rotor should a start be attempted. The relay will thus only allow a restart if the rotor has a sufficient thermal reserve to start (see Fig. 6/7).

Emergency start-up

If the relay determines that a restart of the motor is not allowed, the relay will issue a block signal to the closing command, effectively blocking any attempt to start the motor. The emergency startup will defeat this block signal if activated through a binary input. The thermal replica can also be reset to allow an emergency restart of the motor.

Temperature monitoring (ANSI 38)

Either 5 internal RTD inputs or up to 12 RTD inputs through an external RTD box can be applied for temperature detection. Example for the application with 5 internal RTD inputs: Two RTDs can be applied to each bearing (the cause of 50 % of typical motor failures).
The remaining RTD is used to measure the ambient temperature. Stator temperature is calculated by the current flowing through the stator windings. Alternatively up to 12 RTDs can be applied using an external RTD box connected either through RS485 on Port B or through Ethernet on Port A.
The RTDs can also be used to monitor the thermal status of transformers or other pieces of primary equipment.

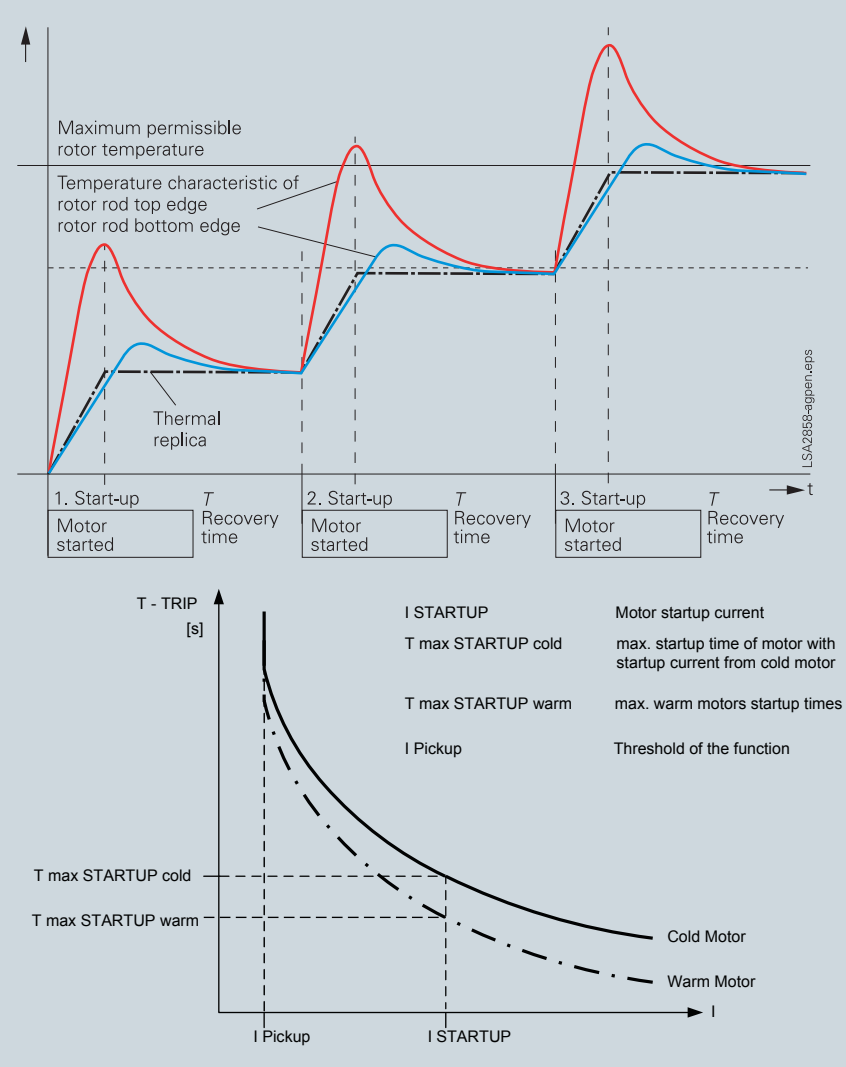

Fig. 6/7 Starting time supervision characteristics

Starting time supervision/Locked rotor protection (ANSI 48/14)

Starting time supervision protects the motor against unwanted prolonged starts that might occur in the event of exces-sive load torque or excessive voltage drops within the motor, or if the rotor is locked. Rotor temperature is calculated from measured stator current. The tripping time is calculated according to the following equation:

$$t_{TRIP} \quad \frac{I_A^2}{I} \; t_{Amax}$$

t_{TRIP} = Tripping time
I_A = Motor starting current
t_{Amax} = Max. permissible starting time
I = Actual current flowing

Because the flow of current is the cause of the heating of the motor windings, this equation will accurately calculate the starting supervision time. The accuracy will not be affected by reduced terminal voltage that could cause a prolonged start. The trip time is an inverse current dependant characteristic (I^2t).

Block rotor can also be detected using a speed sensor connected to a binary input of the relay. If activated it will cause an instantaneous trip.

Load jam protection (ANSI 51M)

Load jam is activated when a sudden high load is applied to the motor because of mechanical failure of a pump for example. The sudden rise in current is detected by this function and can initiate an alarm or a trip. The overload function is too slow and thus not suitable

Unbalanced-load protection (ANSI 46)

The unbalanced load protection detects a phase failure or load unbalance due to system asymmetry, and protects the rotor from impermissible overheating.

Undercurrent monitoring (ANSI 37)

A sudden drop in current, which can occur due to a reduced load, is detected with this function. This may be due to shaft that breaks, no-load operation of pumps or fan failure.

Motor statistics

Essential statistical information is saved by the relay during a start. This includes the duration, current and voltage. The relay will also provide data on the number of starts, total operating time, total down time, etc. This data is saved as statistics in the relay.

Overvoltage protection (ANSI 59)

The two-element overvoltage protection detects unwanted network and machine overvoltage conditions. The function can operate either with phase-to-phase, phase-to-ground, positive phase-sequence or negative phase-sequence voltage. Three-phase and single-phase connections are possible.

Undervoltage protection (ANSI 27)

The two-element undervoltage protection provides protection against dangerous voltage drops (especially for electric machines). Applications include the isolation of generators or motors from the network to avoid undesired operating conditions and a possible loss of stability. Proper operating conditions of electrical machines are best evaluated with the positive-sequence quantities. The protection function is active over a wide frequency range (45 to 55, 55 to 65 Hz). Even when falling below this frequency range the function continues to work, however, with decrease accuracy. The function can operate either with phase-to-phase, phase-to-ground or positive phase-sequence voltage, and can be monitored with a current criterion. Three-phase and single-phase connections are possible.

Frequency protection (ANSI 81O/U)

Frequency protection can be used for overfrequency and underfrequency protection. Electric machines and parts of the system are protected from unwanted frequency deviations. Unwanted frequency changes in the network can be detected and the load can be removed at a specified frequency setting. Frequency protection can be used over a wide frequency range (40 to 60 (for 50 Hz), 50 to 70 (for 60 Hz)). There are four elements (individually set as overfrequency, underfrequency or OFF) and each element can be delayed separately. Blocking of the frequency protection can be performed by activating a binary input or by using an undervoltage element.

Customized functions (ANSI 51V, 55 etc.)

Additional functions, which are not time critical, can be implemented using the CFC measured values. Typical functions include reverse power, voltage controlled overcurrent, phase angle detection, and zero-sequence voltage detection.

Further functions

Measured values

The r.m.s. values are calculated from the acquired current and voltage along with the power factor, frequency, active and reactive power. The following functions are available for measured value processing:

- Currents I_{L1}, I_{L2}, I_{L3}, I_N, I_{EE}
- Voltages V_{L1}, V_{L2}, V_{L3}, V_{12}, V_{23}, V_{31}
- Symmetrical components I_1, I_2, $3I_0$; V_1, V_2, $3V_0$
- Power Watts, Vars, VA/*P*, *Q*, *S* (*P*, *Q*: total and phase selective)
- Power factor cos φ (total and phase selective)
- Frequency
- Energy ± kWh, ± kVarh, forward and reverse power flow
- Mean as well as minimum and maximum current and voltage values
- Operating hours counter
- Mean operating temperature of the overload function
- Limit value monitoring
  Limit values can be monitored using programmable logic in the CFC. Commands can be derived from this limit value indication
- Zero suppression
  In a certain range of very low measured values, the value is set to zero to suppress interference.

Metered values

For internal metering, the unit can calculate an energy metered value from the measured current and voltage values. If an external meter with a metering pulse output is available, the 7SK80 can obtain and process metering pulses through an indication input. The metered values can be displayed and passed on to a control center as an accumulated value with reset. A distinction is made between forward, reverse, active and reactive energy.

Expansion of the binary inputs and outputs with SICAM I/O Unit 7XV5673

To expand binary inputs and outputs, up to two SICAM I/O Units 7XV5673 can be connected to the SIPROTEC 7SK80. Every SICAM I/O Unit 7XV7653 has 6 binary inputs, 6 binary outputs and one ethernet switch for cascading. The connection to the protection device is established either via the DIGSI Ethernet service interface Port A or via IEC 61850 GOOSE to Port B (system interface with EN100 module).

Circuit-breaker wear monitoring/ circuit-breaker remaining service life

Methods for determining circuit-breaker contact wear or the remaining service life of a circuit-breaker (CB) allow CB maintenance intervals to be aligned to their actual degree of wear. The benefit lies in reduced maintenance costs.

There is no exact mathematical method to calculate the wear or the remaining service life of a circuit-breaker that takes arc-chamber's physical conditions into account when the CB opens.

This is why various methods of determining CB wear have evolved which reflect the different operator philosophies. To do justice to these, the relay offers several methods:

- ΣI
- ΣI^x, with x = 1..3
- $\Sigma i^2 t$.

The devices also offer a new method for determining the remaining service life:

- Two-point method

The CB manufacturers double-logarithmic switching cycle diagram (see Fig. 6/8) and the breaking current at the time of contact opening serve as the basis for this method. After CB opening, the two-point method calculates the remaining number of possible switching cycles. Two points P1 and P2 only have to be set on the device. These are specified in the CB's technical data.

All of these methods are phase-selective and a limit value can be set in order to obtain an alarm if the actual value falls below or exceeds the limit value during determination of the remaining service life.

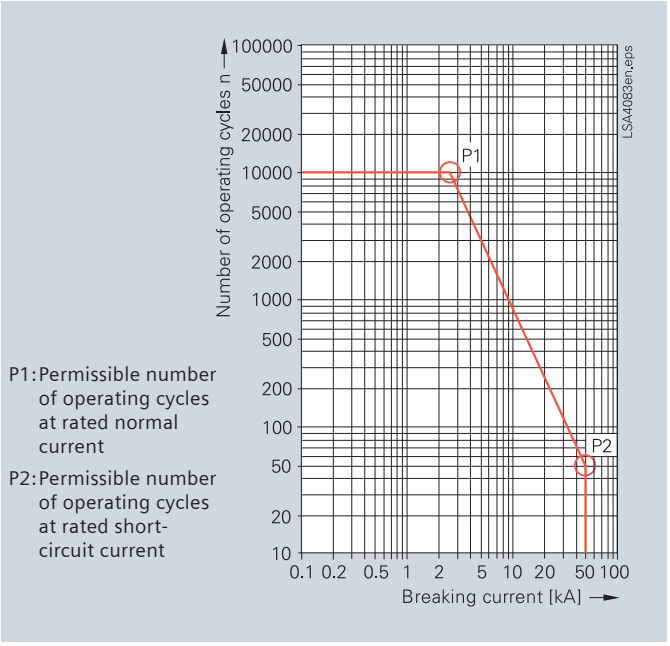

Fig. 6/8 Permissible number of operating cycles as a function of breaking current

Commissioning

Commissioning could not be easier and is supported by DIGSI 4. The status of the binary inputs can be read individually and the state of the binary outputs can be set individually. The operation of switching elements (circuit-breakers, disconnect devices) can be checked using the switching functions of the relay. The analog measured values are represented as wide-ranging operational measured values. To prevent transmission of information to the control center during maintenance, the communications can be disabled to prevent unnecessary data from being transmitted. During commissioning, all indications with test tag for test purposes can be connected to a control and protection system.

Test operation

During commissioning, all indications with test tag can be passed to a control system for test purposes.

Application examples

Radial systems

General hints:
The relay at the far end (D) from the infeed has the shortest tripping time. Relays further upstream have to be time-graded against downstream relays in steps of about 0.3 s.

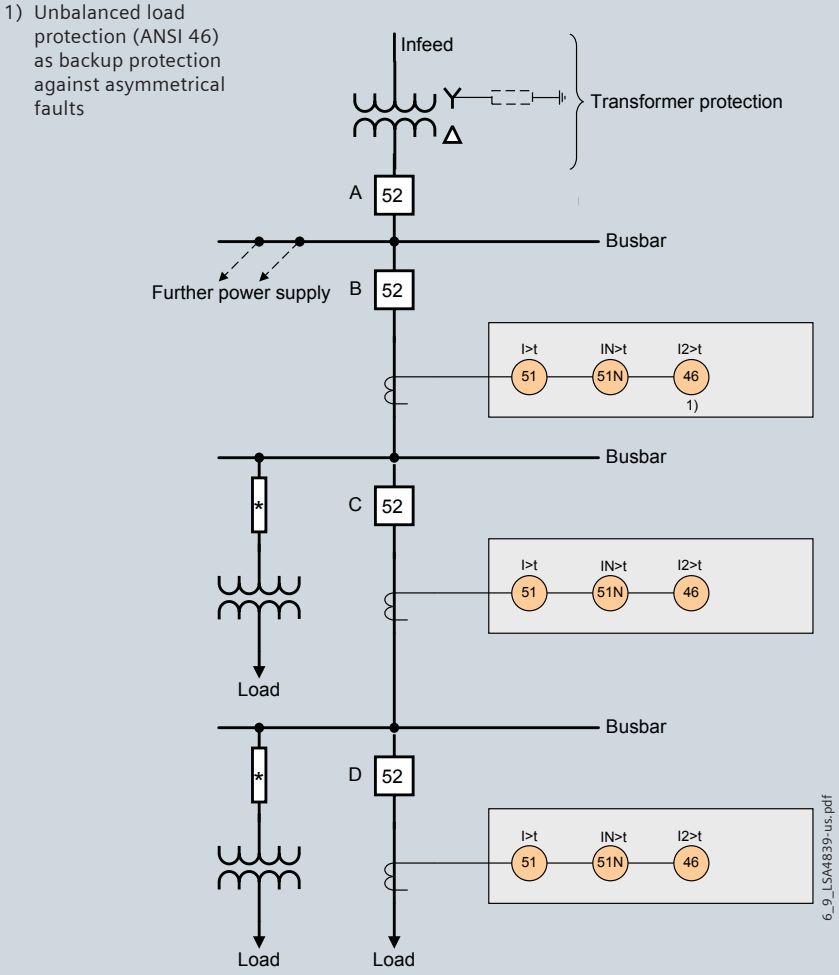

Fig. 6/9 Protection concept with overcurrent protection

Earth-fault detection in isolated or compensated systems

In isolated or compensated systems, an occurred earth fault can be easily found by means of sensitive directional earth-fault detection.

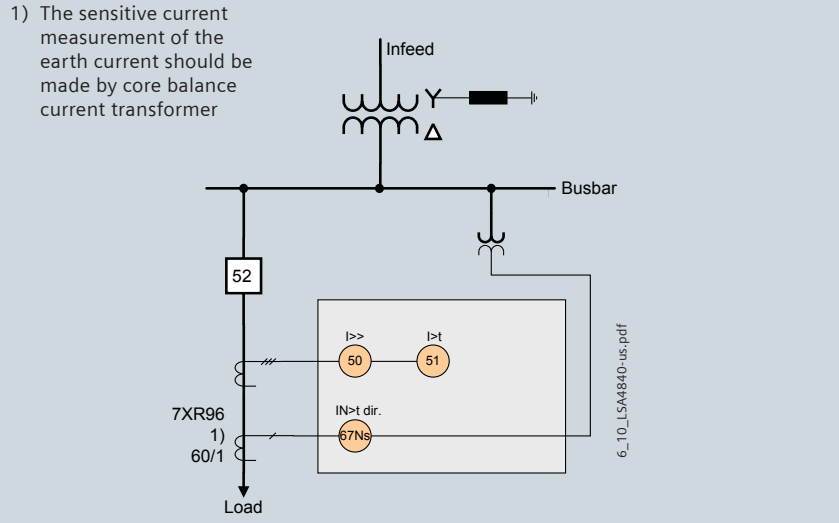

Fig. 6/10 Protection concept for directional earth-fault detection

Small and medium-sized motors < 1MW

Applicable, with effective and low-resistance infeed ($I_E \geq I_{N,\,Motor}$), to low-voltage motors and high-voltage motors with low-resistance infeed ($I_E \geq I_{N,\,Motor}$)

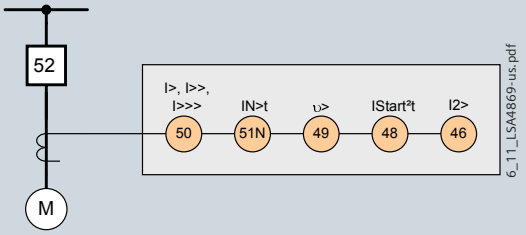

Fig. 6/11 Protection concept for small sized motors

High-resistance infeed ($I_E \leq I_{N,\,Motor}$)

1) Zero-sequence current transformer

2) The sensitive directional earth-fault detection (ANSI 67Ns) is only applicable with the infeed from an isolated system or a system earthed via Petersen coil.

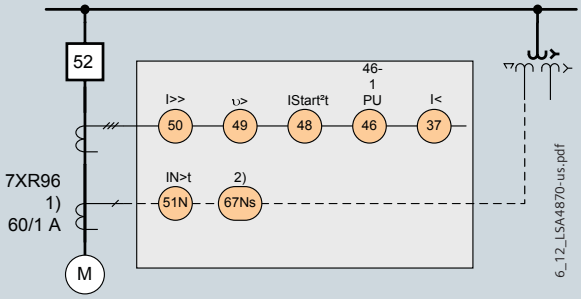

Fig. 6/12 Protection concept for medium sized motors

Generators < 500 kW

If a zero-sequence current transformer is available for the sensitive earth-fault protection, the SIPROTEC 7SK80 relay with the sensitive earth-current input should be used.

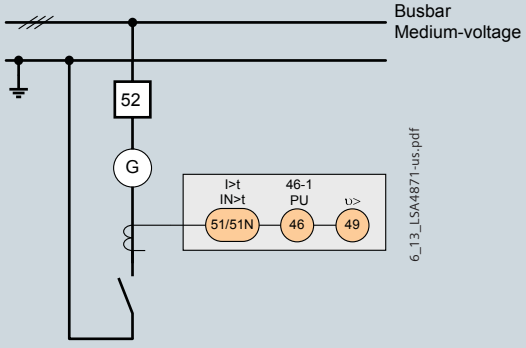

Fig. 6/13 Protection concept for smallest generators with solidly earthed neutral

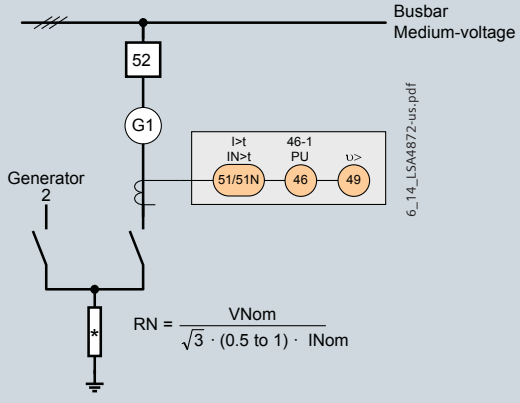

Fig. 6/14 Protection concept for smallest generators with low-resistance neutral earthing

Application examples

Generators up to 1MW

Two voltage transformers in V-connection are sufficient.

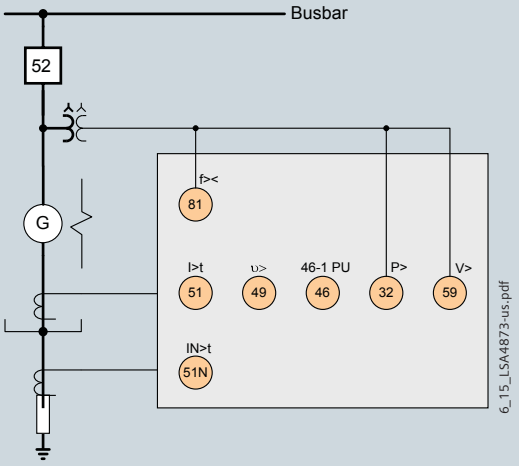

Fig. 6/15 Protection concept for small generators

Busbar protection by overcurrent relays with reverse interlocking

Applicable to distribution busbars without substantial (< 0.25 x I_N) backfeed from the outgoing feeders.

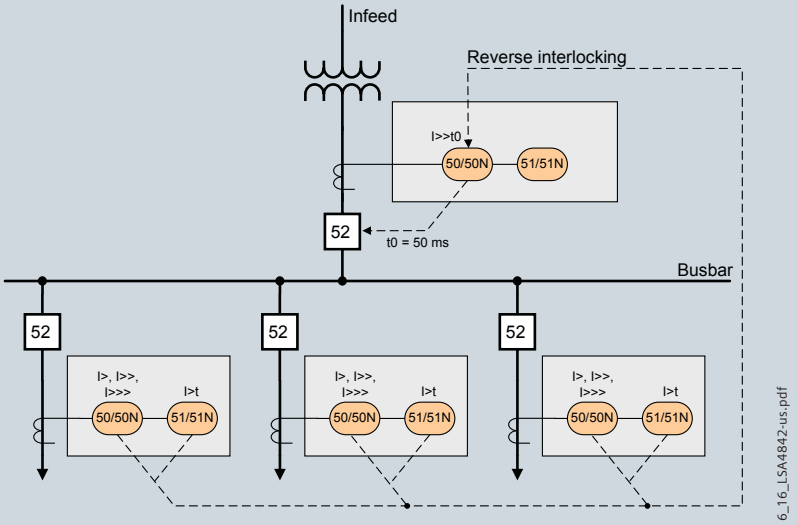

Fig. 6/16 Busbar protection with reverse interlocking

Line feeder with load shedding

In unstable power systems (e.g. solitary systems, emergency power supply in hospitals), it may be necessary to isolate selected consumers from the power system in order to protect the overall system. The overcurrent-time protection functions are effective only in the case of a short-circuit. Overloading of the generator can be measured as a frequency or voltage drop.

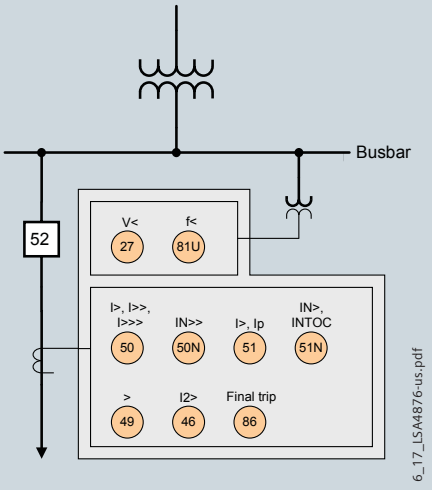

Fig. 6/17 Line feeder with load shedding

Protection of a transformer

The high-current stage enables a current grading, the overcurrent stages work as backup protection to subordinate protection devices, and the overload function protects the transformer from thermal overload. Low-current, single-phase faults on the low-voltage side, which are reproduced in the opposite system on the high-voltage side, can be detected with the unbalanced load protection. The available inrush blocking prevents pickup caused by the inrush currents of the transformer.

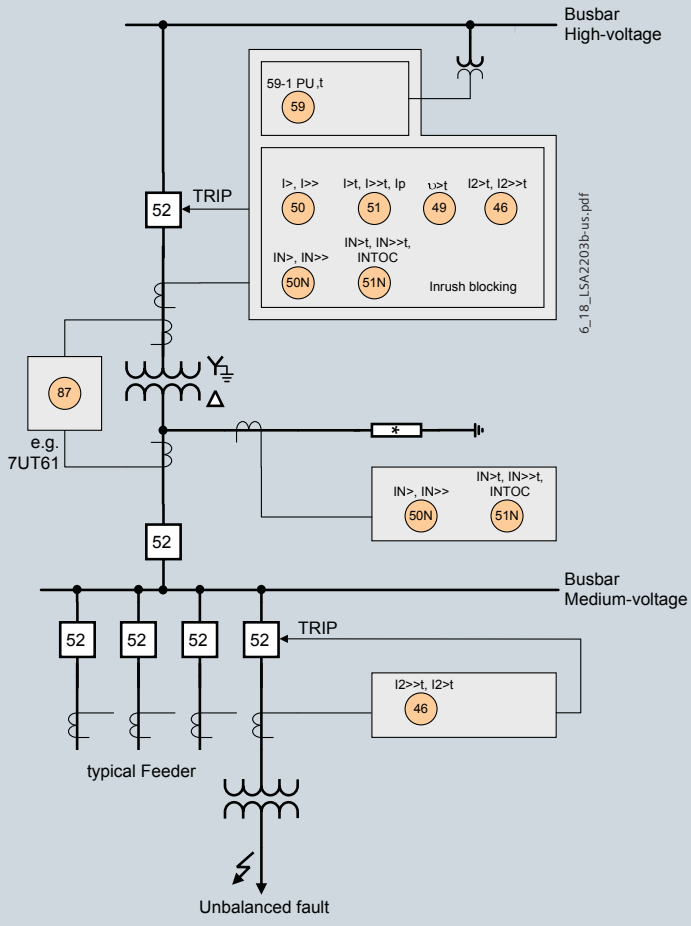

Fig. 6/18 Typical protection concept for a transformer

Motor protection

For short-circuit protection, the stages I>> and I_E>> are available, for example. Sudden load variations in running operation are acquired by the I_{load}> function. For isolated systems, the sensitive earth-fault detection (IEE>>, V_0>) can be used. The stator is protected against thermal overload by υs, the rotor by I_2>, start-time supervision and restart inhibit. A locked rotor is detected via a binary input, and shut down as fast as required. The restart inhibit can be deactivated by an “emergency start”.

The undervoltage function prevents a start when the voltage is too low; the overvoltage function prevents insulation damages.

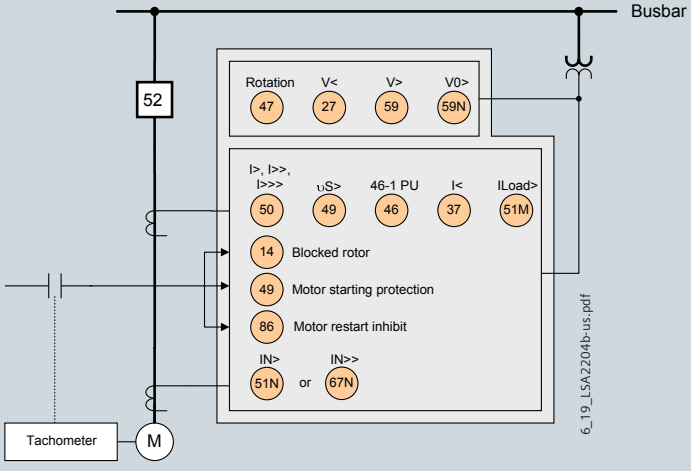

Fig. 6/19 Typical protection concept for an asynchronous high-voltage motor

Generator and Motor Protection SIPROTEC 7SK80

Selection and ordering data

Product description	Order No.	Short code
	1 2 3 4 5 6 7 8 9 10 11 12 13 14 15 16 17 18 19	
Motor Protection 7SK80 V4.7	7SK80 □□ - □ □□□□□ - □ □□□ + □□□	
Measuring inputs, binary inputs and outputs		
Housing 1/6 19"; 4 x I, 3 BI, 5 BO (2 Changeover / Form C), 1 life contact	1	
Housing 1/6 19"; 4 x I, 7 BI, 8 BO (2 Changeover / Form C), 1 life contact	2	
Housing 1/6 19"; 4 x I, 3 x V, 3 BI, 5 BO (2 Changeover / Form C), 1 life contact	3	
Housing 1/6 19"; 4 x I, 3 x V, 7 BI, 8 BO (2 Changeover / Form C), 1 life contact	4	
Housing 1/6 19"; 4 x I, 3 BI, 5 BO (2 Changeover / Form C), 5 RTD inputs, 1 life contact	5	
Housing 1/6 19"; 4 x I, 3 x V, 3 BI, 5 BO (2 Changeover / Form C), 5 RTD inputs, 1 life contact	6	
Measuring inputs, default settings I		
I_{ph} = 1 A / 5 A, I_e = 1 A / 5 A	1	
I_{ph} = 1 A / 5 A, I_{ee} (sensitive) = 0.001 to 1.6 A / 0,005 bis 8 A	2	
Auxiliary voltage		
24 V to 48 V	1	
DC 60 V to 250 V; AC 115 V; AC 230 V	5	
Construction		
Surface-mounting case, screw-type terminal	B	
Flush-mounting case, screw-type terminal	E	
Region specific default and language settings		
Region DE, IEC, language German (language changeable), standard front	A	
Region World, IEC / ANSI, language English (language changeable), standard front	B	
Region US, ANSI, language US-English (language changeable), US front	C	
Region FR, IEC / ANSI, language French (language changeable), standard front	D	
Region World, IEC / ANSI, language Spanish (language changeable), standard front	E	
Region World, IEC / ANSI, language Italian (language changeable), standard front	F	
Region RUS, IEC / ANSI, language Russian (language changeable), standard front	G	
Region CHN, IEC / ANSI, language Chinese (language changeable), chinese front	K	
Port B (at bottom of device, rear)		
No port	0	
IEC 60870-5-103 or DIGSI 4 / Modem, electrical RS232	1	
IEC 60870-5-103 DIGSI 4 / Modem or RTD-box, electrical RS485	2	
IEC 60870-5-103 DIGSI 4 / Modem or RTD-box, optical 820 nm, ST connector	3	
PROFIBUS DP slave, electrical RS485	9	L 0 A
PROFIBUS DP slave, optical, double ring, ST connector	9	L 0 B
MODBUS, electrical RS485	9	L 0 D
MODBUS, optical 820 nm, ST connector	9	L 0 E
DNP 3.0, electrical RS485	9	L 0 G
DNP 3.0, optical 820 nm, ST connector	9	L 0 H
IEC 60870-5-103, redundant, electrical RS485, RJ45 connector	9	L 0 P
IEC 61850, 100 Mbit Ethernet, electrical, double, RJ45 connector	9	L 0 R
IEC 61850, 100 Mbit Ethernet, optical, double, LC connector	9	L 0 S
DNP3 TCP + IEC 61850, 100 Mbit Ethernet, electrical, double, RJ45 connector	9	L 2 R
DNP3 TCP + IEC 61850, 100 Mbit Ethernet, optical, double, LC connector	9	L 2 S
PROFINET + IEC 61850, 100 Mbit Ethernet, electrical, double, RJ45 connector	9	L 3 R
PROFINET + IEC 61850, 100 Mbit Ethernet, optical, double, LC connector	9	L 3 S
IEC 60870-5-104 + IEC 61850, 100Mbit Ethernet, electrical,double, RJ45 connector	9	L 4 R
IEC 60870-5-104 + IEC 61850, 100Mbit Ethernet, optical, double, LC connector	9	L 4 S
Port A (at bottom of device, in front)		
No port	0	
With Ethernet interface (DIGSI, RTD-box, I / O-Unit, not IEC 61850), RJ45 connector	6	
Measuring / fault recording		
With fault recording	1	
With fault recording, average values, min / max values	3	

see next page

Selection and ordering data

ANSI No.	Product description	Order No.	Short code
		1 2 3 4 5 6 7 8 9 10 11 12 13 14 15 16 17 18 19 20	
Motor Protection 7SK80 V4.7		**7SK80**□□-□□□□□-□□□□+□□□□	
	Basic functionality (contained in all options)		**H D 0** [4]
50/51	Overcurrent protection phase $I>$, $I>>$, $I>>>$, I_p		
50N/51N	Overcurrent protection ground $I_E>$, $I_E>>$, $I_E>>>$, I_{Ep}		
50N(s)/51N(s) [1]	Sensitive ground fault protection $I_{EE}>$, $I_{EE}>>$, I_{EEp}		
	Intermittent ground fault protection		
49	Overload protection		
74TC	Trip circuit supervision		
50BF	Circuit breaker failure protection		
46	Unbalanced-load protection		
86	Lockout		
48	Starting time supervision		
37	Undercurrent monitoring		
66/86	Restart inhibit		
14	Locked rotor protection		
51M	Load jam protection		
	Motor statistics		
	Parameter changeover		
	Monitoring functions		
	Control of circuit-breaker		
	Flexible protection functions (current parameters)		
	Inrush restraint		
	Basic functionality + Directional sensitive ground fault, voltage and frequency protection + Directional intermittent ground fault protection		**H E 0** [5]
51V	Voltage dependent inverse-time overcurrent protection		
67N	Directional overcurrent protection ground, $I_E>$, $I_E>>$, $I_E>>>$, I_{Ep}		
67Ns [1]	Directional sensitive ground fault protection, $I_{EE}>$, $I_{EE}>>$, I_{EEp}		
67Ns [2]	Directional intermittent ground fault protection		
64/59N	Displacement voltage		
27/59	Under/Overvoltage		
81 U/O	Under/Overfrequency, $f<$, $f>$		
47	Phase rotation		
	Flexible protection functions (current and voltage parameters):		
27R/32/55/59R/81R	Protection function for voltage, power, power factor, rate-of-frequency change, rate-of-voltage change,		
ATEX100-certification			
with ATEX100-certification [3] for protection of explosion-proved machines of increased-safety type "e"			**Z X 9 9**

1) Depending on the ground current input the function will be either sensitive (I_{EE}) or non-sensitive (I_E).
2) Function only available with sensitive ground current input (Position 7 = **2**)
3) If no ATEX100-certification is required, please order without the order No. extension -**ZX99**
4) Only if position 6 = **1, 2** or **5**
5) Only if position 6 = **3**, **4** or **6**

You will find a detailed overview of the technical data (extract of the manual) under: http://www.siemens.com/siprotec

Connection diagrams

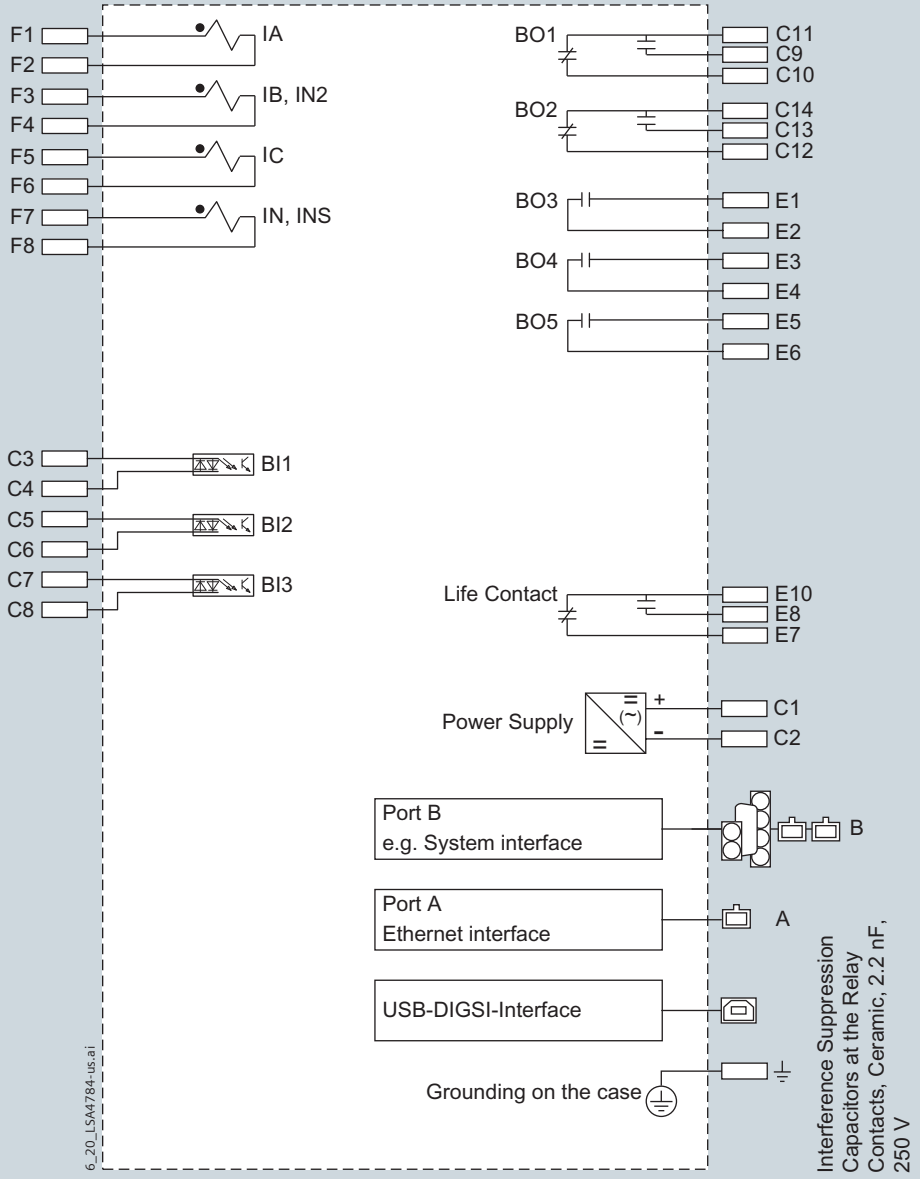

Fig. 6/20 Motor protection SIPROTEC 7SK801

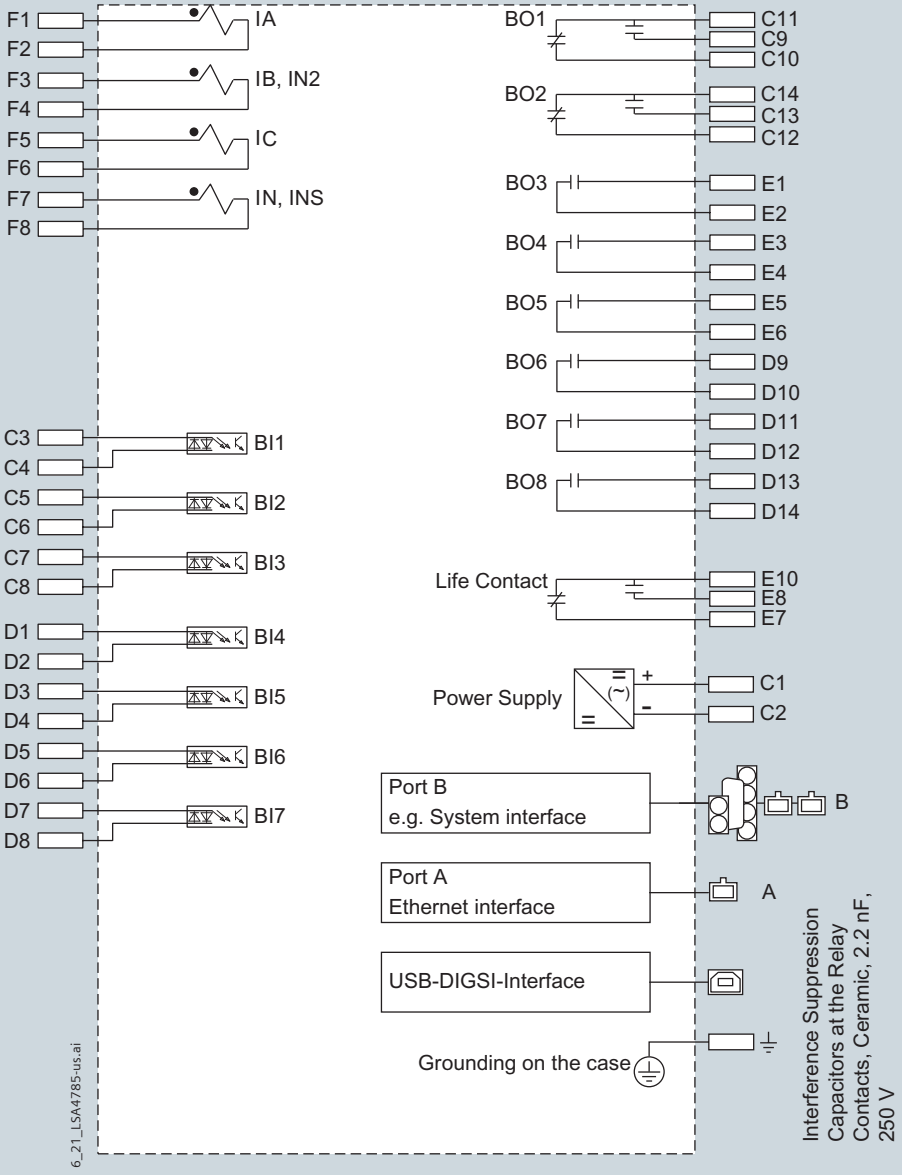

Fig. 6/21 Motor protection SIPROTEC 7SK802

Connection diagrams

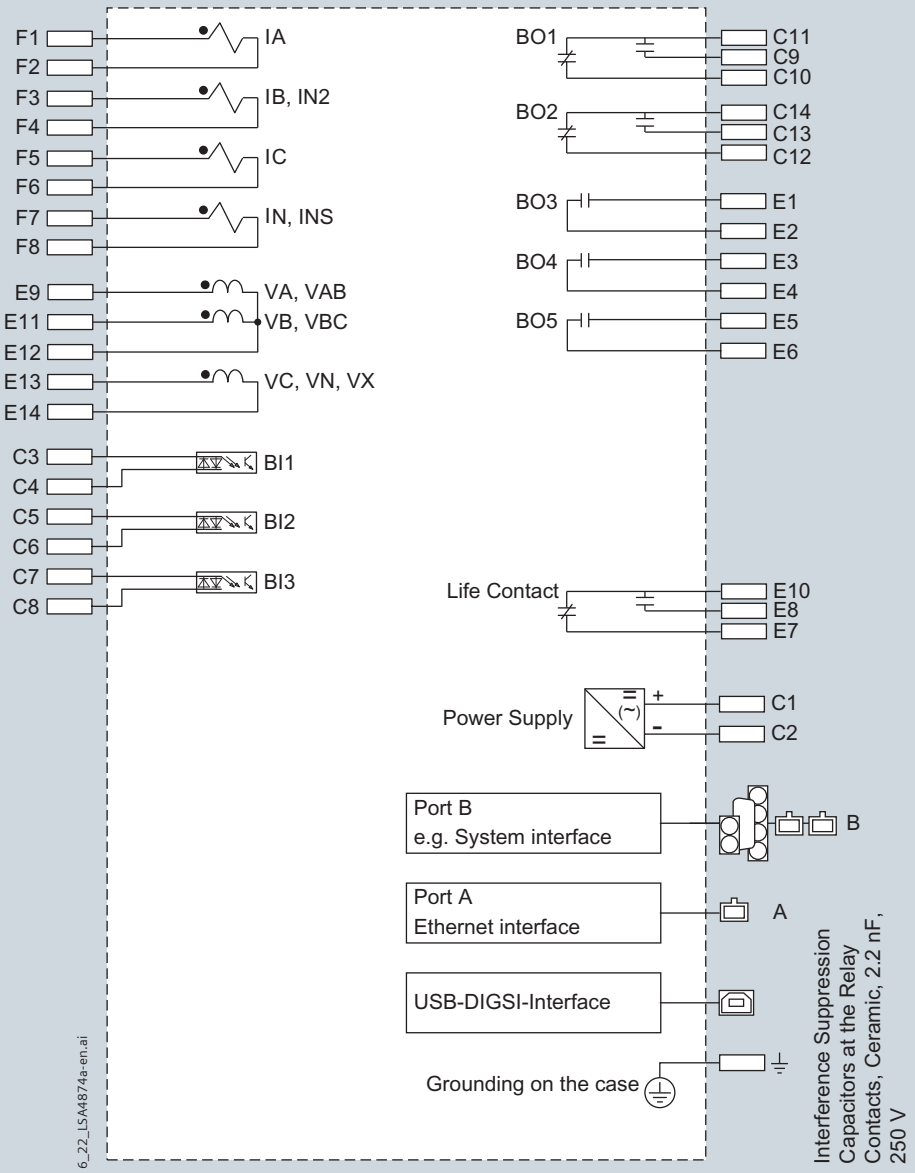

Fig. 6/22 Motor protection SIPROTEC 7SK803

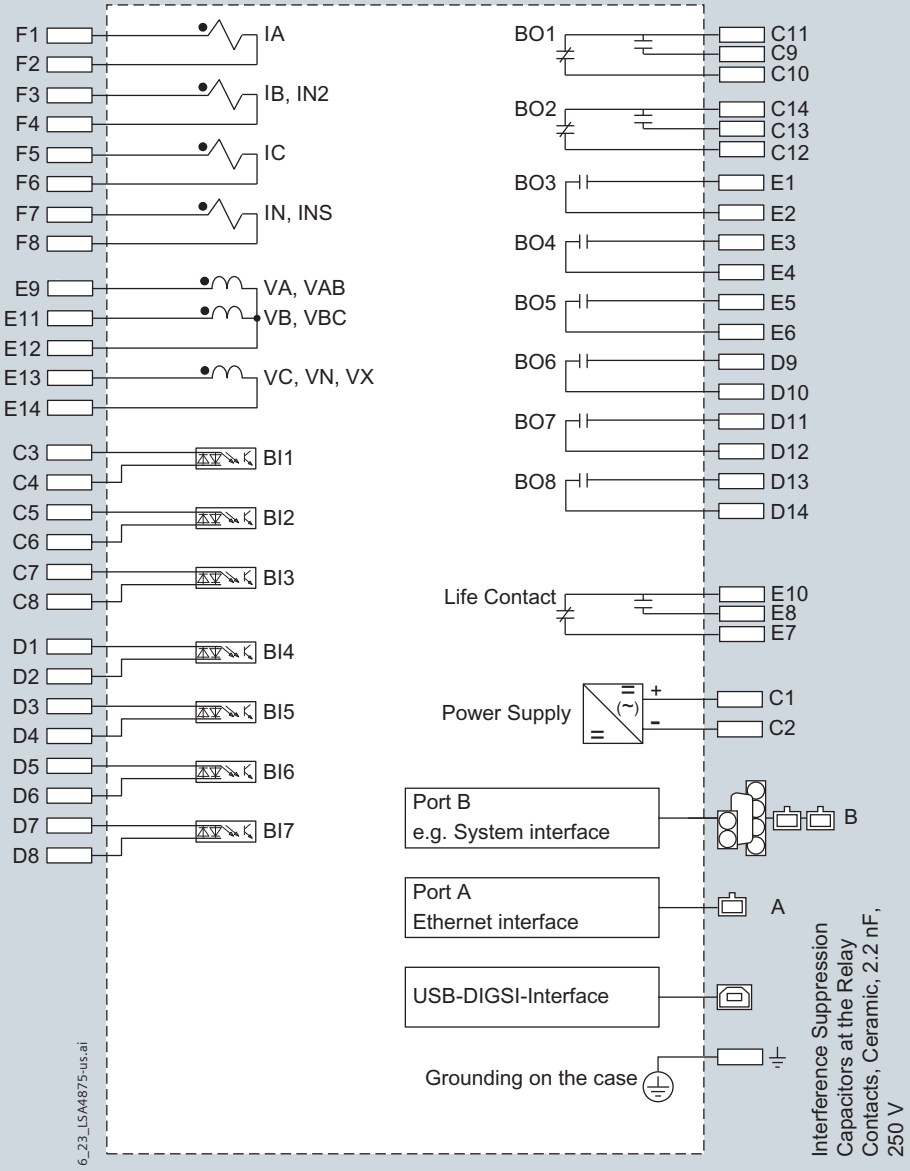

Fig. 6/23 Motor protection SIPROTEC 7SK804

Connection diagrams

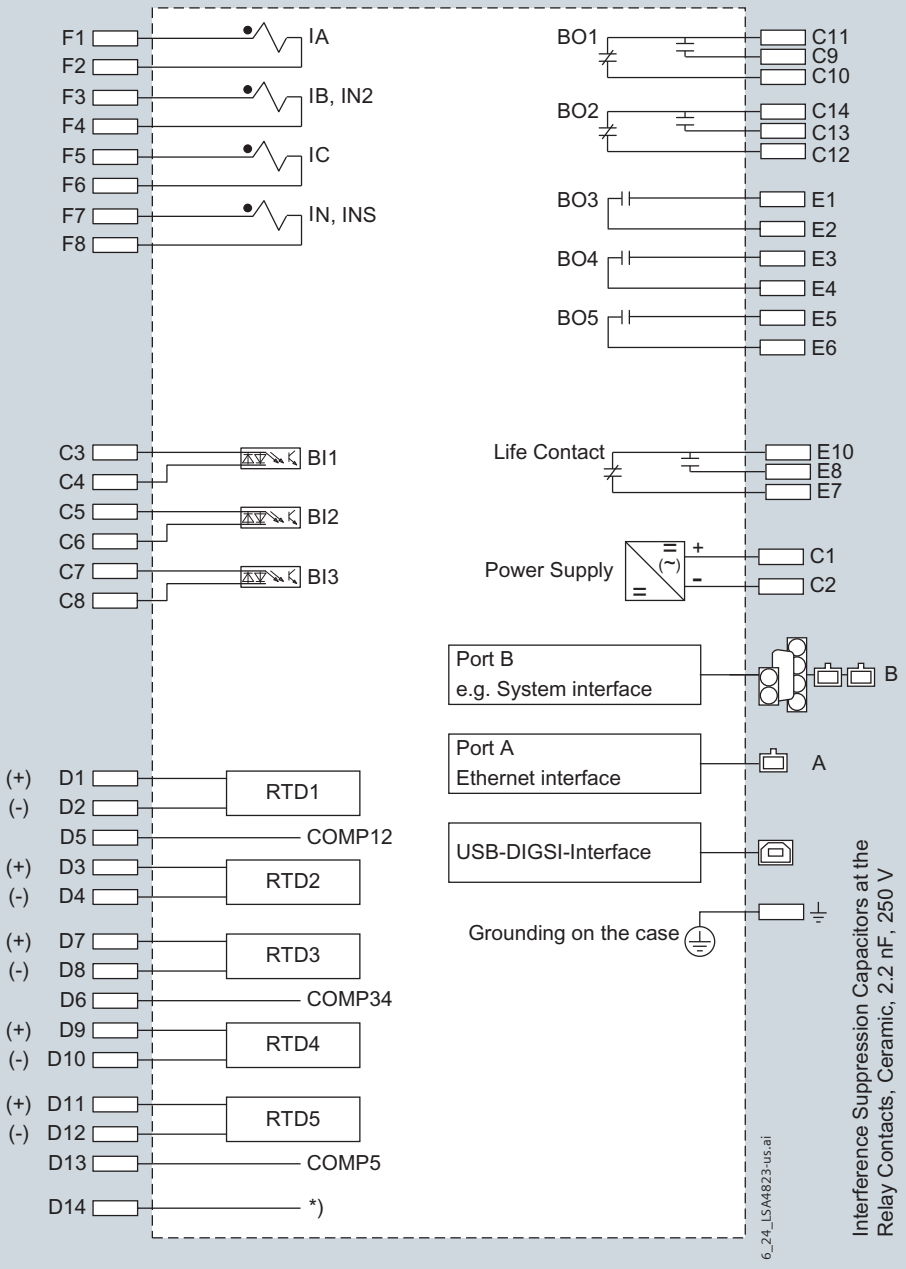

Fig. 6/24 Motor protection SIPROTEC 7SK805

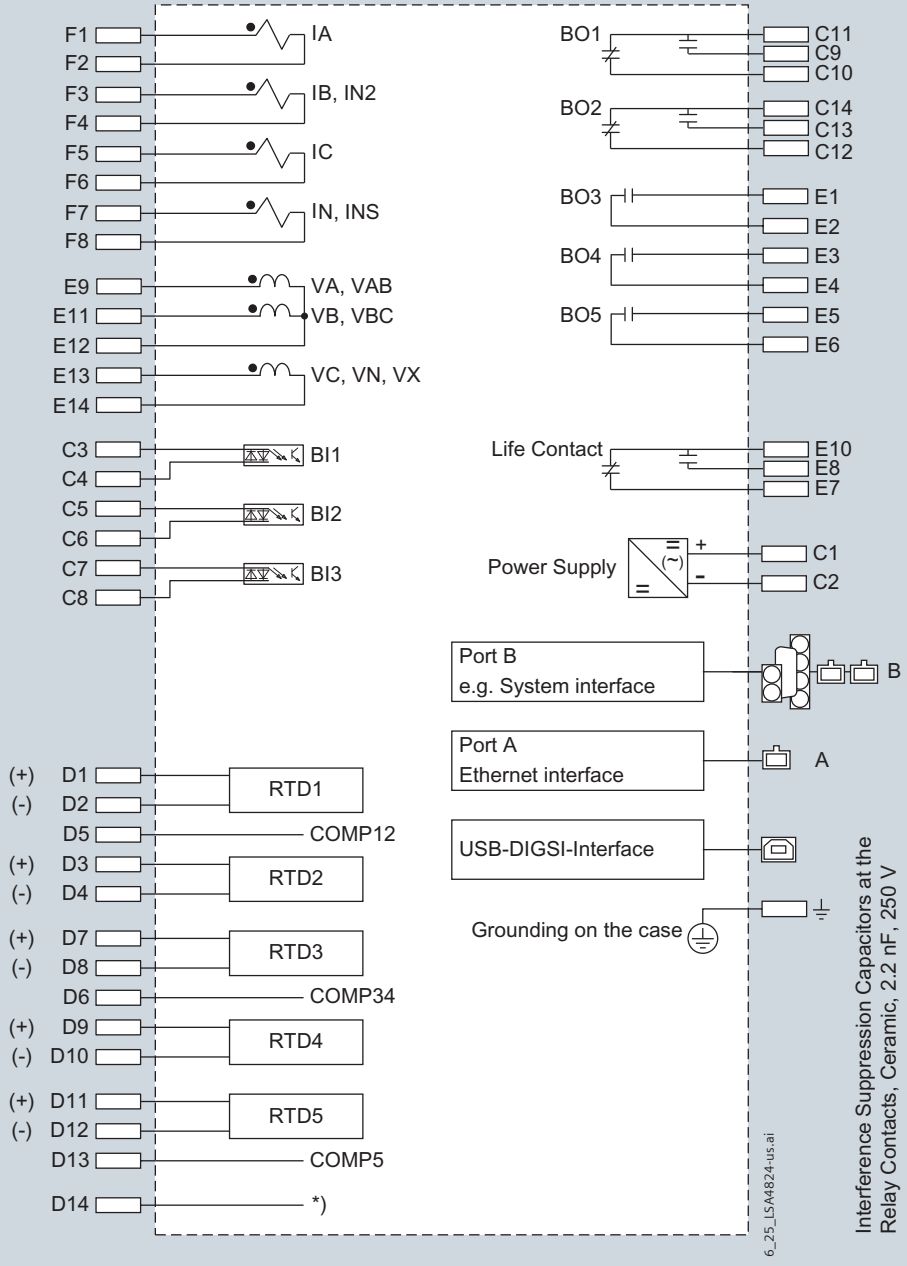

Fig. 6/25 Motor protection SIPROTEC 7SK806

Connection examples

Connection of current and voltage transformers

Standard connection

For grounded networks, the ground current is obtained from the phase currents by the residual current circuit.

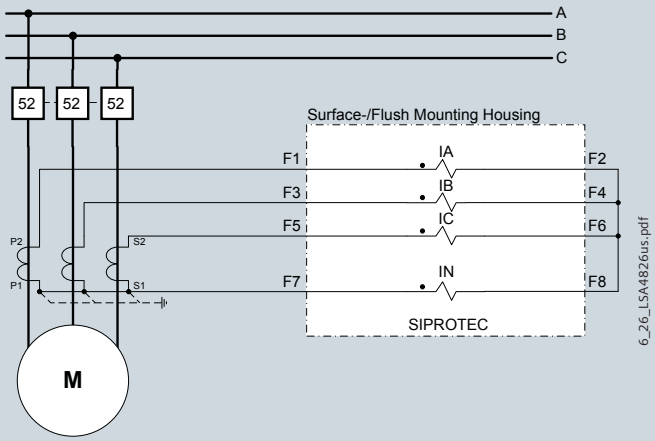

Fig. 6/26 Residual current circuit without directional element

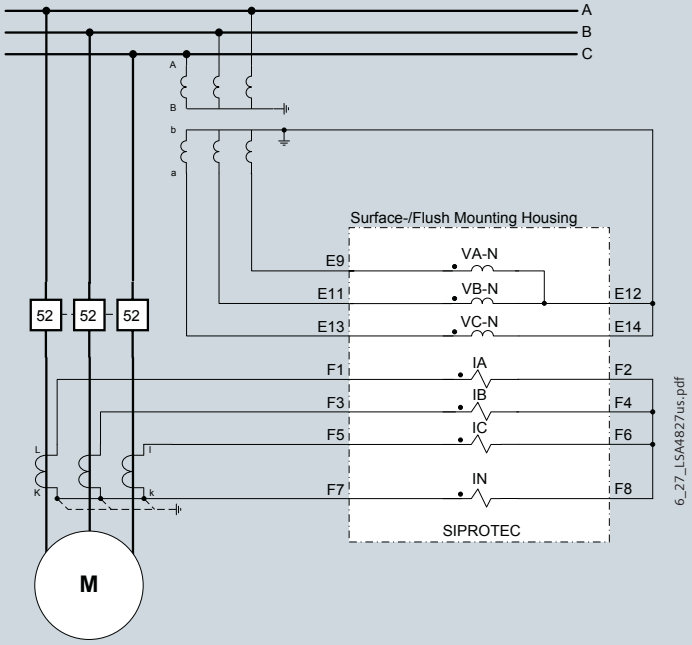

Fig. 6/27 Residual current circuit with directional element for ground (non directional element for phases)

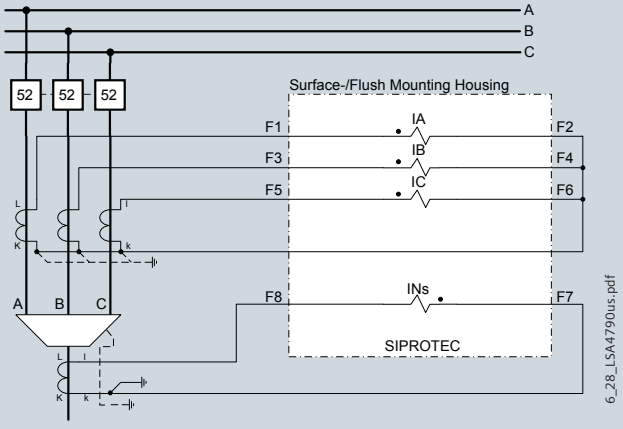

Fig. 6/28 Current transformer connections on three current transformers, earth current of additional summation current transformer

Connection for compensated networks

The figure shows the connection of two phase-to-ground voltages and the V_E voltage of the broken delta winding and a phase-balance neutral current transformer for the ground current. This connection maintains maximum precision for directional ground-fault detection and must be used in compensated networks.

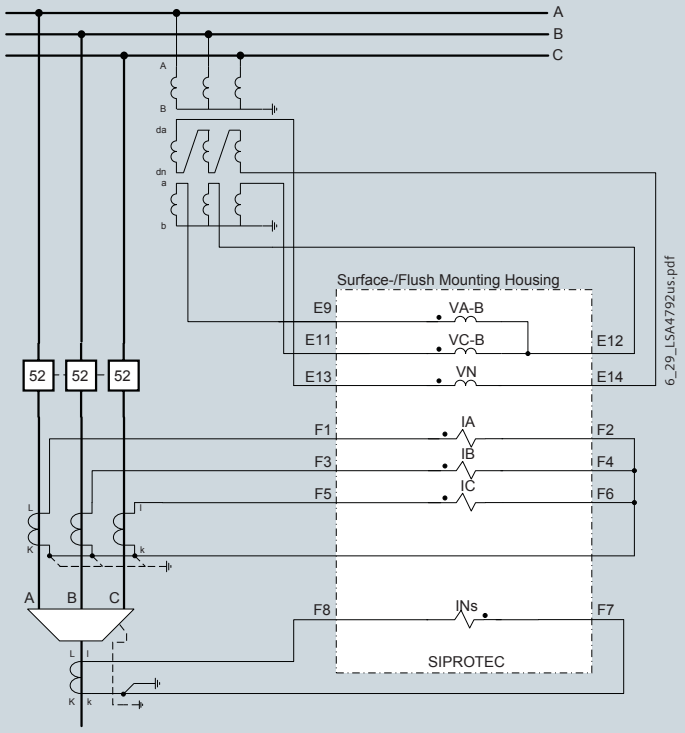

Fig. 6/29 Sensitive directional ground-fault detection (non directional element for phases)

Sensitive directional ground-fault detection.

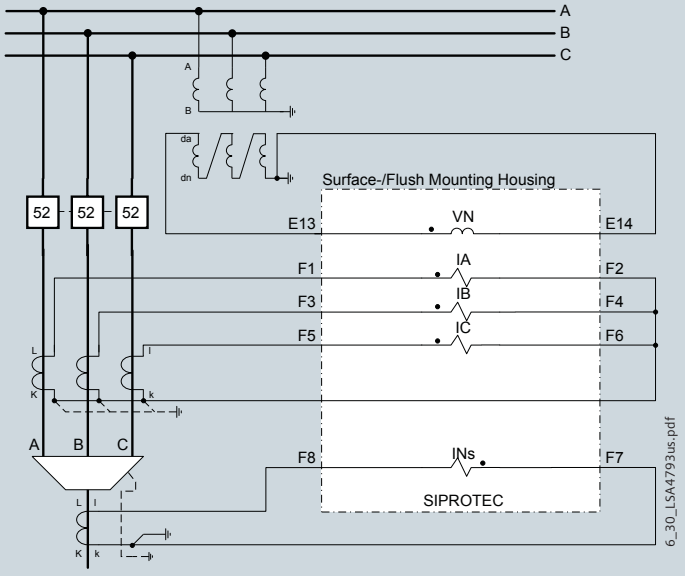

Fig. 6/30 Sensitive directional ground-fault detection

Connection examples

Connection for all types of power systems

The illustration shows the connection of three current transformers and two voltage transformers in V-connection.

A directional earth-fault protection is not possible, as the displacement voltage cannot be calculated.

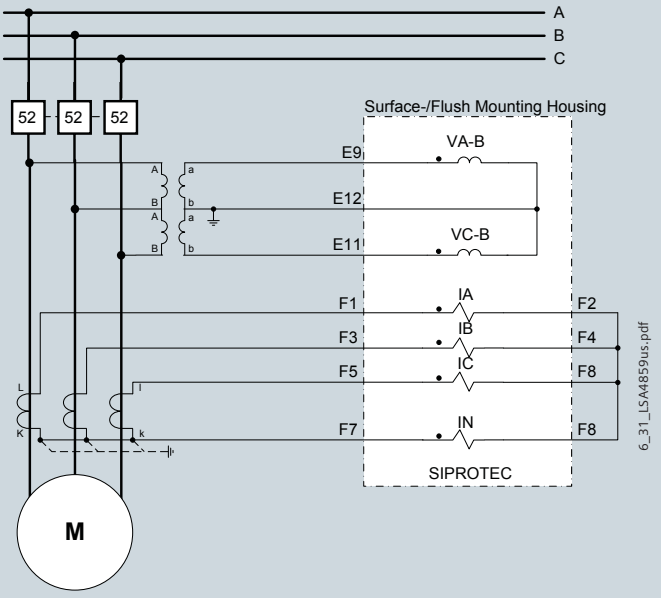

Fig. 6/31 Residual circuit with voltage functions (non directional element for phase)

Overview of connection types

Type of network	Function	Current connection	Voltage connection
(Low-resistance) grounded networks	Overcurrent protection phase / ground non-directional	Residual circuit, with 3 phase-current transformers required, phase-balance neutral current transformers possible	–
(Low-resistance) grounded networks	Sensitive ground-fault protection	Phase-balance neutral current transformers required	–
Isolated or compensated networks	Overcurrent protection phases non-directional	Residual circuit, with 3 or 2 phase-current transformers possible	–
(Low-resistance) grounded networks	Directional overcurrent protection, phase	Residual circuit, with 3 phase-current transformers possible	Phase-to-ground connection or phase-to-phase connection
Isolated or compensated networks	Directional overcurrent protection, phase	Residual circuit, with 3 or 2 phase-current transformers possible	Phase-to-ground connection or phase-to-phase connection
(Low-resistance) grounded networks	Directional overcurrent protection, ground-faults	Residual circuit, with 3 phase-current transformers required, phase-balance neutral current transformers possible	Phase-to-ground connection required
Isolated networks	Sensitive ground-fault protection	Residual circuit, if ground current > 0.05 I_N on secondary side, otherwise phase-balance neutral current transformers required	3 times phase-to-ground connection or phase-to-ground connection with broken delta winding
Compensated networks	Sensitive ground-fault protection cos φ measurement	Phase-balance neutral current transformers required	3 times phase-to-ground connection or phase-to-ground connection with broken delta winding

Table 6/4 Overview of connection types

SIEMENS



SIPROTEC Compact
Generator and Motor Protection 7SK81 for Low-Power CT and VT Applications

Generator and Motor Protection SIPROTEC 7SK81

for Low-Power CT and VT Applications

	Page
Description	7/3
Function overview	7/4
Applications	7/5
Application sheets	7/6
Application examples	7/12
Selection and ordering data	7/16
Connection diagrams	7/18
Connection examples	7/24

You will find a detailed overview of the technical data (extract of the manual) under:
http://www.siemens.com/siprotec

7

Description

The SIPROTEC 7SK81 provides 4 low-power current transformer inputs and optionally 3 low-power voltage transformer inputs. With the same low-power current transformer (LPCT) a wide range of primary rated line currents can be covered. Objects with rated currents in the range of 40 A to 5000 A can be protected when using low-power current transformers. The following low-power current transformer ratios are suitable for the following primary current operating ranges:

- 100 A/225 mV for a primary operating current range of 40 A ... 600 A
- 50 A/22.5 mV for a primary operating current range of 200 A ... 3000 A
- 400A/225mV for a primary operating current range of 200 A ... 2500 A
- 100 A/22.5 mV for a primary operating current range of 400 A ... 5000 A.

The SIPROTEC 7SK81 is a multi-functional motor protection relay. It is designed for protection of asynchronous motors of all sizes. The relays have all the required functions to be applied as a backup relay to a transformer differential relay.

The relay provides numerous functions to respond flexibly to the system requirements and to deploy the invested capital economically. Examples for this are: exchangeable interfaces, flexible protection functions and the integrated automation level (CFC). Freely assignable LEDs and a six-line display ensure a unique and clear display of the process states.
In combination with up to 9 function keys, the operating personnel can react quickly and safely in any situation. This guarantees a high operational reliability.

Highlights

- Inputs for low power VTs and CTs according IEC 61869-6 (formerly IEC 60044-7 and IEC 60044-8)
- Removable terminal blocks
- Binary input thresholds settable using DIGSI (3 stages)
- 9 programmable function keys
- 6-line display
- Buffer battery exchangeable from the front
- USB front port
- 2 additional communication ports
- Integrated switch for low-cost and redundant optical Ethernet rings
- Ethernet redundancy protocols RSTP, PRP and HSR for highest availability
- Relay-to-relay communication through Ethernet with IEC 61850 GOOSE
- Millisecond-accurate time synchronization through Ethernet with SNTP.



Fig. 7/1 SIPROTEC 7SK81 front view



Fig. 7/2 SIPROTEC 7SK81 rear view

Generator and Motor Protection SIPROTEC 7SK81

for Low-Power CT and VT Applications - Function overview

Protection functions	IEC	ANSI
Instantaneous and definite time-overcurrent protection (phase/neutral)	$I>$, $I>>$, $I>>>$, $I_E>$, $I_E>>$, $I_E>>>$; I_p, I_{Ep}	50, 50N; 51, 51N
Directional time-overcurrent protection, ground	$I_{E\ dir}>$, $I_{E\ dir}>>$, $I_{Ep\ dir}$	67N
Directional overcurrent protection, ground (definite/inverse)	$I_{EE}>$, $I_{EE}>>$, I_{EEp}	67Ns, 50Ns
Displacement voltage, zero-sequence voltage	V_E, $V_0>$	59N
Trip-circuit supervision	AKU	74TC
Undercurrent monitoring	$I<$	37
Temperature monitoring		38
Thermal overload protection	$\vartheta>$	49
Load jam protection		51M
Locked rotor protection		14
Restart inhibit		66/86
Undervoltage/overvoltage protection	$V<$, $V>$	27/59
Forward-power, reverse-power protection	$P<>$, $Q<>$	32
Power factor	cos φ	55
Overfrequency/underfrequency protection	$f<$, $f>$	81O/U
Breaker failure protection		50BF
Phase-balance current protection (negative-sequence protection)	$I_2>$	46
Unbalance-voltage protection and/or phase-sequence monitoring	$V_2>$, phase sequence	47
Start-time supervision		48
Lockout		86
Rate-of-frequency-change protection	df/dt	81R

Table 7/1 Function overview

7

Control functions/programmable logic

- Commands for the ctrl. of CB, disconnect switches (isolators/isolating switches)
- Control through keyboard, binary inputs, DIGSI 4 or SCADA system
- User-defined PLC logic with CFC (e.g. interlocking).

Monitoring functions

- Operational measured values V, I, f
- Energy metering values W_p, W_q
- Circuit-breaker wear monitoring
- Minimum and maximum values
- Trip-circuit supervision
- Fuse failure monitor
- 8 oscillographic fault records
- Motor statistics.

Communication interfaces

- System/service interface
  - IEC 61850 Edition 1 and 2
  - IEC 60870-5-103
  - PROFIBUS-DP
  - DNP 3.0
  - MODBUS RTU
  - Ethernet redundancy protocols RSTP, PRP and HSR
- Ethernet interface for DIGSI 4, RTD box
- USB front interface for DIGSI 4.

Hardware

- 4 current inputs
- 0/3 voltage inputs
- 3/7 binary inputs (thresholds configurable using software)
- 5/8 binary outputs (2 changeover)
- 0/5 RTD inputs
- 1 life contact
- Pluggable voltage terminals.

The SIPROTEC 7SK81 unit is a numerical motor protection relay for low power CT and VT inputs. It can perform control and monitoring functions and therefore provide the user with a cost-effective platform for power system management, that ensures reliable supply of electrical power to the customers. The ergonomic design makes control easy from the relay front panel. A large, easy-to-read display was a key design factor.

Control

The integrated control function permits control of disconnect devices, grounding switches or circuit-breakers through the integrated operator panel, binary inputs, DIGSI 4 or the control or automation system (e.g. SICAM).

Programmable logic

The integrated logic characteristics (CFC) allow the user to add own functions for automation of switchgear (e.g. interlocking) or switching sequence. The user can also generate user-defined messages. This functionality can form the base to create extremely flexible transfer schemes.

Operational measured value

Extensive measured values (e.g. I, V), metered values (e.g.W_p,W_q) and limit values (e.g. for voltage, frequency) provide improved system management.

Operational indication

Event logs, trip logs, fault records and statistics documents are stored in the relay to provide the user or operator with all the key data required to operate modern substations.

Motor protection

The SIPROTEC 7SK81 device is specifically designed to protect induction-type asynchronous motors.

Line protection

SIPROTEC 7SK81 units can be used for line protection of high and medium-voltage networks with grounded, low-resistance grounded, isolated or a compensated neutral point.

Transformer protection

The SIPROTEC 7SK81 device provides all the functions for backup protection for transformer differential protection. The inrush suppression effectively prevents unwanted trips that can be caused by inrush currents.

Backup protection

As a backup protection the SIPROTEC 7SK81 devices are universally applicable.

Switchgear cubicles for high/medium voltage

All units are designed specifically to meet the requirements of high/medium-voltage applications. In general, no separate measuring instruments (e.g., for current, voltage, frequency, ...) or additional control components are necessary.

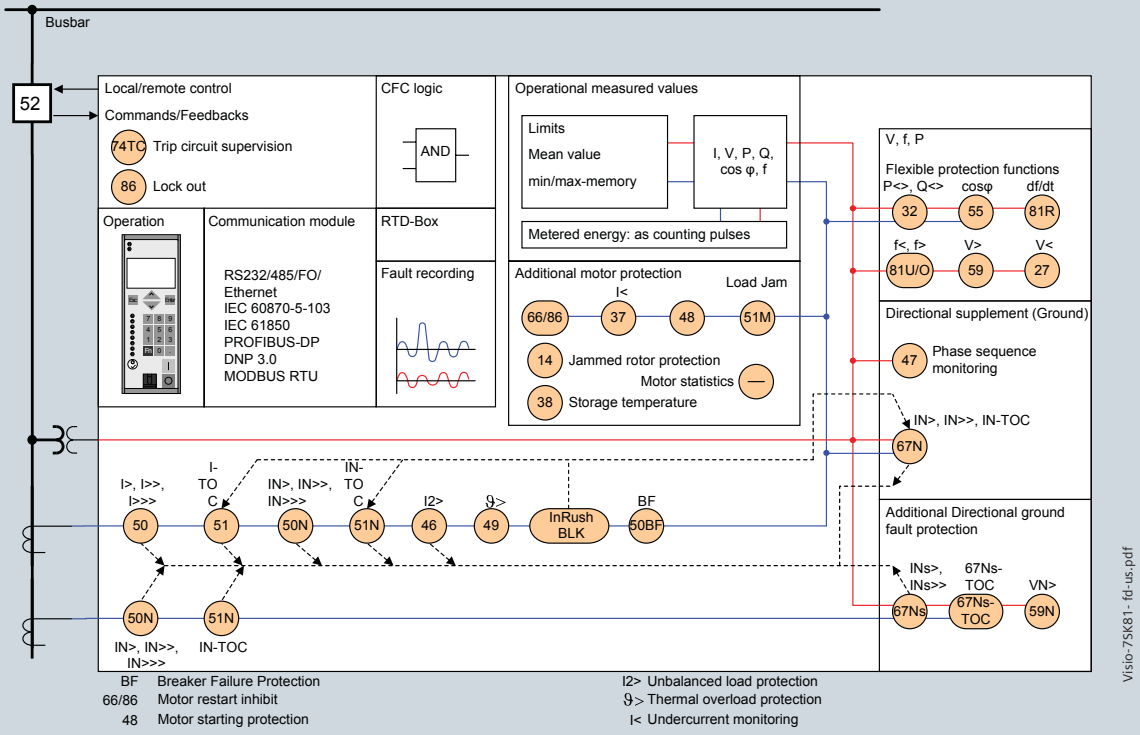

Fig. 7/3 Function diagram

Protection functions

Time-overcurrent protection (ANSI 50, 50N, 51, 51N)

This function is based on the phase selective measurement of the three phase currents and the ground current (four transformers). Three definite-time overcurrent protection elements (DMT) are available both for the phase and the ground elements. The current threshold and the delay time can be set in a wide range.

Inverse-time overcurrent protection characteristics (IDMTL) can also be selected and activated.

Reset characteristics

Time coordination with electromechanical relays are made easy with the inclusion of the reset characteristics according to ANSI C37.112 and IEC 60255-3 /BS 142 standards. When using the reset characteristic (disk emulation), the reset process is initiated after the fault current has disappeared. This reset process corresponds to the reverse movement of the Ferraris disk of an electromechanical relay (disk emulation).

Available inverse-time characteristics

Characteristics acc. to	IEC 60255-3	ANSI/IEEE
Inverse	•	•
Short inverse		•
Long inverse	•	•
Moderately inverse		•
Very inverse	•	•
Extremely inverse	•	•

Table7/2 Available inverse-time characteristics

Inrush restraint

If second harmonic content is detected during the energization of a transformer, the pickup of stages $I>$, I_p, $I>_{dir}$ and $I_{p\ dir}$ is blocked.

Dynamic settings group switching

In addition to the static parameter changeover, the pickup thresholds and the tripping times for the directional and non-directional time-overcurrent protection functions can be changed over dynamically. As changeover criterion, the circuit-breaker position, the prepared auto-reclosure, or a binary input can be selected.

Directional overcurrent protection, ground (ANSI 67N)

Directional ground protection is a separate function. It operates in parallel to the non-directional ground overcurrent elements. Their pickup values and delay times can be set separately. Definite-time and inverse-time characteristics aroffered. The tripping characteristic can be rotated by 0 to ± 180 degrees.

For ground protection, users can choose whether the direction is to be calculated using the zero-sequence or negative-sequence system quantities (selectable). If the zero-sequence voltage tends to be very low due to the zero-sequence impedance it will be better to use the negative-sequence quantities.

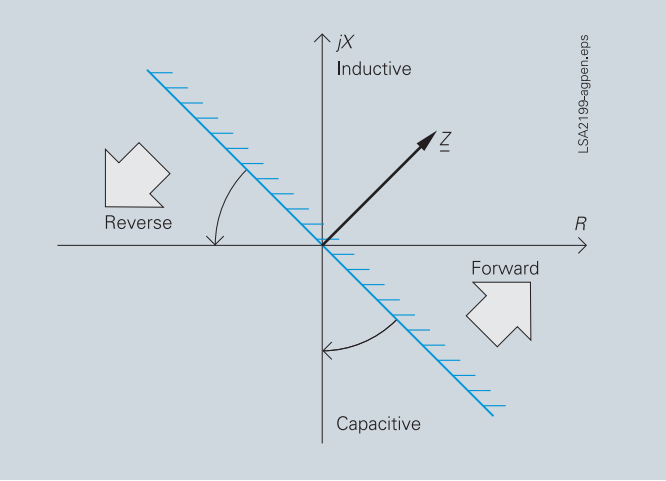

Fig. 7/4 Directional characteristic of the directional time-overcurrent protection, ground

(Sensitive) directional ground-fault detection (ANSI 59N/64, 67Ns, 67N)

For isolated-neutral and compensated networks, the direction of power flow in the zero sequence is calculated from the zero-sequence current I0 and zero-sequence voltage V0. For networks with an isolated neutral, the reactive current component is evaluated; for compensated networks, the active current component or residual resistive current is evaluated. For special network conditions, e.g. high-resistance grounded networks with ohmic-capacitive ground-fault current or low-resistance grounded networks with ohmic-inductive current, the tripping characteristics can be rotated approximately ± 45 degrees (see Fig. 7/5).

Two modes of ground-fault direction detection can be implemented: tripping or "signalling only mode".

- It has the following functions:
- TRIP via the displacement voltage VE
- Two instantaneous elements or one instantaneous plus one user-defined characteristic
- Each element can be set to forward, reverse or non-directional
- The function can also be operated in the insensitive mode as an additional short-circuit protection.

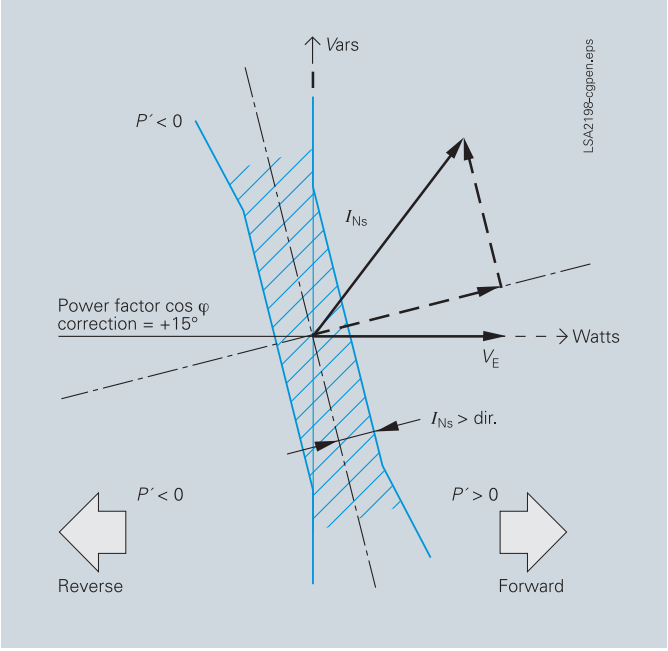

Fig. 7/5 Directional determination using cosine measurements for compensated networks

(Sensitive) ground-fault detection (ANSI 50Ns, 51Ns / 50N, 51N)

For high-resistance grounded networks, a sensitive input transformer is connected to a split-core low-power current transformer (also called core-balance CT). The function can also be operated in the normal mode as an additional short-circuit protection for neutral or residual ground protection.

Phase-balance current protection (ANSI 46) (Negative-sequence protection)

By measuring current on the high side of the transformer, the two-element phase-balance current/negative-sequence protection detects high-resistance phase-to-phase faults and phase-to-ground faults on the low side of a transformer (e.g. Dy 5). This function provides backup protection for high-resistance faults through the transformer.

Breaker failure protection (ANSI 50BF)

If a faulted portion of the electrical circuit is not disconnected when a trip command is issued to a circuit-breaker, another trip command can be initiated using the breaker failure protection which trips the circuit-breaker of an upstream feeder. Breaker failure is detected if, after a trip command is issued and the current keeps on flowing into the faulted circuit. It is also possible to make use of the circuit-breaker position contacts for indication as opposed to the current flowing through the circuit-breaker.

Flexible protection functions

SIPROTEC 7SK81 enables the user to easily add up to 20 additional protection functions. Parameter definitions are used to link standard protection logic with any chosen characteristic quantity (measured or calculated quantity). The standard logic consists of the usual protection elements such as the pickup set point, the set delay time, the TRIP command, a block function, etc. The mode of operation for current, voltage, power and power factor quantities can be three-phase or phase-selective. Almost all quantities can be operated with ascending or descending pickup stages (e.g. under and over- voltage). All stages operate with protection priority or speed.

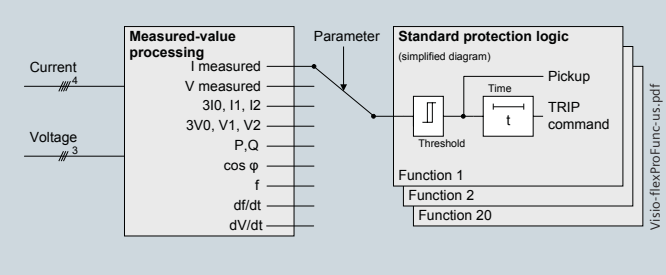

Fig. 7/6 Flexible protection functions

Protection functions/stages available are based on the available measured analog quantities:

Function	ANSI
$I>$, $I_E>$	50, 50N
$V<$, $V>$, $V_E>$	27, 59, 59N
$3I_0>$, $I_1>$, $I_2>$, $I_2/I_1>$, $3V_0>$, $V_1><$, $V_2><$	50N, 46, 59N, 47
$P><$, $Q><$	32
cos φ	55
$f><$	81O, 81U
$df/dt><$	81R

Table 7/3 Available flexible protection functions

For example, the following can be implemented:

- Reverse power protection (ANSI 32R)
- Rate-of-frequency-change protection (ANSI 81R).

Trip circuit supervision (ANSI 74TC)

One or two binary inputs can be used for monitoring the circuit-breaker trip coil including its incoming cables. An alarm signal is generated whenever the circuit is interrupted.

Lockout (ANSI 86)

All binary output statuses can be memorized. The LED reset key is used to reset the lockout state. The lockout state is also stored in the event of supply voltage failure. Reclosure can only occur after the lockout state is reset.

Thermal overload protection (ANSI 49)

To protect cables and transformers, an overload protection function with an integrated warning/alarm element for temperature and current can be used. The temperature is calculated using a thermal homogeneous body model (per IEC 60255-8), it considers the energy entering the equipment and the energy losses. The calculated temperature is constantly adjusted according to the calculated losses. The function considers loading history and fluctuations in load.

Protection of motors requires an additional time constant. This is used to accurately determine the thermal heating of the stator during the running and motor stopped conditions. The ambient temperature or the temperature of the coolant can be detected either through internal RTD inputs or via an external RTD-box. The thermal replica of the overload function is automatically adapted to the ambient conditions. If neither internal RTD inputs nor an external RTD-box exist, it is assumed that the ambient temperatures are constant.

Settable dropout delay times

If the relays are used in conjunction with electromechanical relays, in networks with intermittent faults, the long dropout times of the electromechanical relay (several hundred milliseconds) can lead to problems in terms of time coordina-tion/grading. Proper time coordination/grading is only possible if the dropout or reset time is approximately the same. This is why the parameter for dropout or reset times can be defined for certain functions, such as time-overcurrent protection, ground short-circuit and phase-balance current protection.

Motor protection

Restart inhibit (ANSI 66/86)

If a motor is subjected to many successive starts, the rotor windings or rotor bars can be heated up to a point where the electrical connections between the rotor bars and the end rings are damaged. As it is not possible to physically measure the heat of the rotor we need to determine the heat by measuring the current the rotor is drawing through the stator to excite the rotor. A thermal replica of the rotor is established using a I^2t curve. The restart inhibit will block the user from starting the motor if the relay determined that the rotor reached a temperature that will damage the rotor should a start be attempted. The relay will thus only allow a restart if the rotor has a sufficient thermal reserve to start (see Fig.).

Emergency start-up

If the relay determines that a restart of the motor is not allowed, the relay will issue a block signal to the closing command, effectively blocking any attempt to start the motor. The emergency startup will defeat this block signal if activated through a binary input. The thermal replica can also be reset to allow an emergency restart of the motor.

Temperature monitoring (ANSI 38)

Either 5 internal RTD inputs or up to 12 RTD inputs through an external RTD box can be applied for temperature detection. Example for the application with 5 internal RTD inputs: Two RTDs can be applied to each bearing (the cause of 50% of typical motor failures). The remaining RTD is used to measure the ambient temperature. Stator temperature is calculated by the current flowing through the stator windings. Alternatively up to 12 RTDs can be applied using an external RTD box connected either through RS485 on Port B or through Ethernet on Port A. The RTDs can also be used to monitor the thermal status of transformers or other pieces of primary equipment.

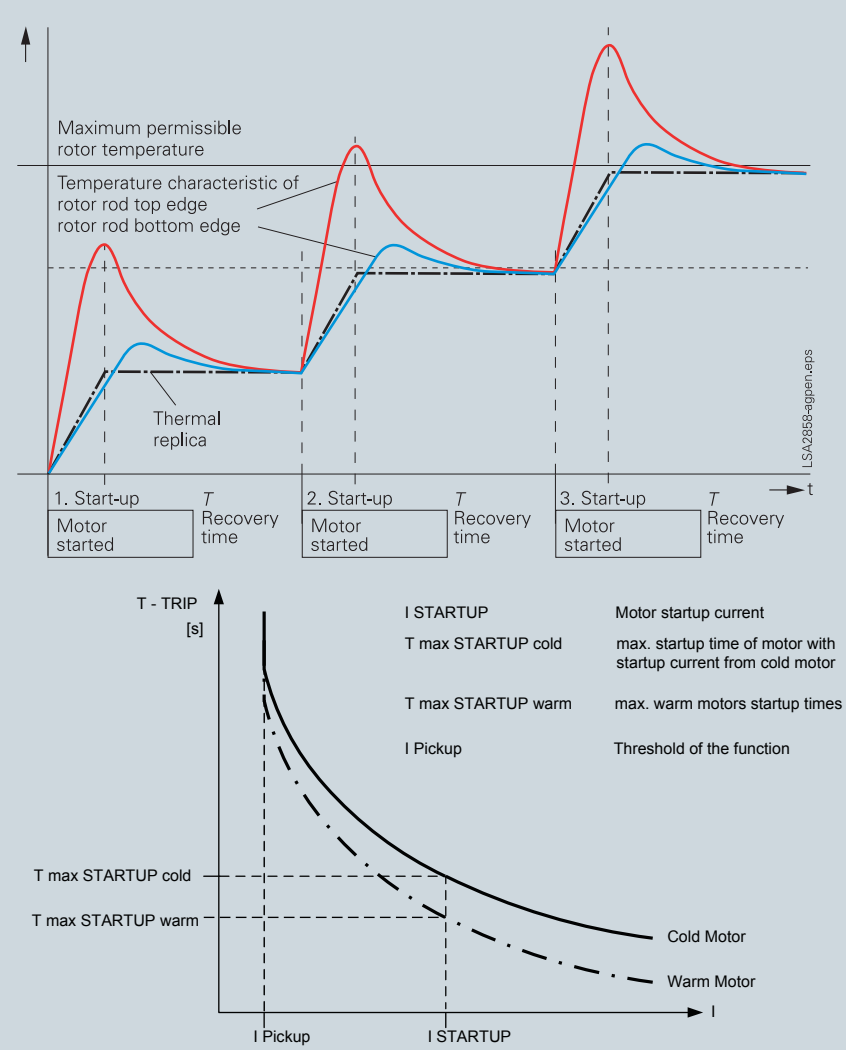

Fig. 7/7 Starting time supervision characteristics

Starting time supervision/Locked rotor protection (ANSI 48/14)

Starting time supervision protects the motor against unwanted prolonged starts that might occur in the event of excessive load torque or excessive voltage drops within the motor, or if the rotor is locked. Rotor temperature is calculated from measured stator current. The tripping time is calculated according to the following equation:

$$t_{TRIP} \quad \frac{I_A^2}{I} \; t_{Amax}$$

t_{TRIP} = Tripping time I_A= Motor starting current
t_{Amax} = Max. permissible starting time
I = Actual current flowing

Because the flow of current is the cause of the heating of the motor windings, this equation will accurately calculate the starting supervision time. The accuracy will not be affected by reduced terminal voltage that could cause a prolonged start. The trip time is an inverse current dependant characteristic (I^2t).

Block rotor can also be detected using a speed sensor connected to a binary input of the relay. If activated it will cause an instantaneous trip.

Load jam protection (ANSI 51M)

Load jam is activated when a sudden high load is applied to the motor because of mechanical failure of a pump for example. The sudden rise in current is detected by this function and can initiate an alarm or a trip. The overload function is too slow and thus not suitable.

Unbalanced load protection (ANSI 46)

The unbalanced load protection detects a phase failure or load unbalance due to system asymmetry, and protects the rotor from impermissible overheating.

Undercurrent monitoring (ANSI 37)

A sudden drop in current, which can occur due to a reduced load, is detected with this function. This may be due to shaft that breaks, no-load operation of pumps or fan failure.

Motor statistics

Essential statistical information is saved by the relay during a start. This includes the duration, current and voltage. The relay will also provide data on the number of starts, total operating time, total down time, etc. This data is saved as statistics in the relay.

Overvoltage protection (ANSI 59)

The two-element overvoltage protection detects unwanted network and machine overvoltage conditions. The function can operate either with phase-to-phase, phase-to-ground, positive phase-sequence or negative phase-sequence voltage. Three-phase and single-phase connections are possible.

Undervoltage protection (ANSI 27)

The two-element undervoltage protection provides protection against dangerous voltage drops (especially for electric machines). Applications include the isolation of generators or motors from the network to avoid undesired operating conditions and a possible loss of stability. Proper operating conditions of electrical machines are best evaluated with the positive-sequence quantities. The protection function is active over a wide frequency range (45 to 55, 55 to 65 Hz). Even when falling below this frequency range the function continues to work, however, with decreased accuracy. The function can operate either with phase-to-phase, phase-to-ground or positive phase-sequence voltage, and can be monitored with a current criterion. Three-phase and single-phase connections are possible.

Frequency protection (ANSI 81O/U)

Frequency protection can be used for overfrequency and underfrequency protection. Electric machines and parts of the system are protected from unwanted frequency deviations. Unwanted frequency changes in the network can be detected and the load can be removed at a specified frequency setting. Frequency protection can be used over a wide frequency range (40 to 60 (for 50 Hz), 50 to 70 (for 60 Hz)). There are four elements (individually set as overfrequency, underfrequency or OFF) and each element can be delayed separately. Blocking of the frequency protection can be performed by activating a binary input or by using an undervoltage element.

Customized functions (ANSI 51V, 55 etc.)

Additional functions, which are not time critical, can be implemented using the CFC measured values. Typical functions include reverse power, voltage controlled overcurrent, phase angle detection, and zero-sequence voltage detection.

Further functions

Measured values

The r.m.s. values are calculated from the acquired current and voltage along with the power factor, frequency, active and reactive power. The following functions are available for measured value processing:

- Currents I_{L1}, I_{L2}, I_{L3}, I_N, I_{EE}
- Voltages V_{L1}, V_{L2}, V_{L3}, V_{12}, V_{23}, V_{31}
- Symmetrical components I_1, I_2, 3 I_0; V_1, V_2, $3V_0$
- Power Watts, Vars, VA/P, Q, S (P, Q: total and phase selective)
- Power factor cos φ (total and phase selective)
- Frequency
- Energy ± kWh, ± kVarh, forward and reverse power flow
- Mean as well as minimum and maximum current and voltage values
- Operating hours counter
- Mean operating temperature of the overload function
- Limit value monitoring
  Limit values can be monitored using programmable logic in the CFC. Commands can be derived from this limit value indication
- Zero suppression
  In a certain range of very low measured values, the value is set to zero to suppress interference.

Metered values

For internal metering, the unit can calculate an energy metered value from the measured current and voltage values. If an external meter with a metering pulse output is available, the 7SK81 can obtain and process metering pulses through an indication input. The metered values can be displayed and passed on to a control center as an accumulated value with reset. A distinction is made between forward, reverse, active and reactive energy.

Circuit-breaker wear monitoring/ circuit-breaker remaining service life

Methods for determining circuit-breaker contact wear or the remaining service life of a circuit-breaker (CB) allow CB maintenance intervals to be aligned to their actual degree of wear. The benefit lies in reduced maintenance costs.

There is no exact mathematical method to calculate the wear or the remaining service life of a circuit-breaker that takes arc-chamber's physical conditions into account when the CB opens.

This is why various methods of determining CB wear have evolved which reflect the different operator philosophies. To do justice to these, the relay offers several methods:

- ΣI
- ΣI^x, with x = 1..3
- $\Sigma i^2 t$.

The devices also offer a new method for determining the remaining service life:

- Two-point method

The CB manufacturers double-logarithmic switching cycle diagram (see Fig. 7/8) and the breaking current at the time of contact opening serve as the basis for this method. After CB opening, the two-point method calculates the remaining number of possible switching cycles. Two points P1 and P2 only have to be set on the device. These are specified in the CB's technical data.

All of these methods are phase-selective and a limit value can be set in order to obtain an alarm if the actual value falls below or exceeds the limit value during determination of the remaining service life.

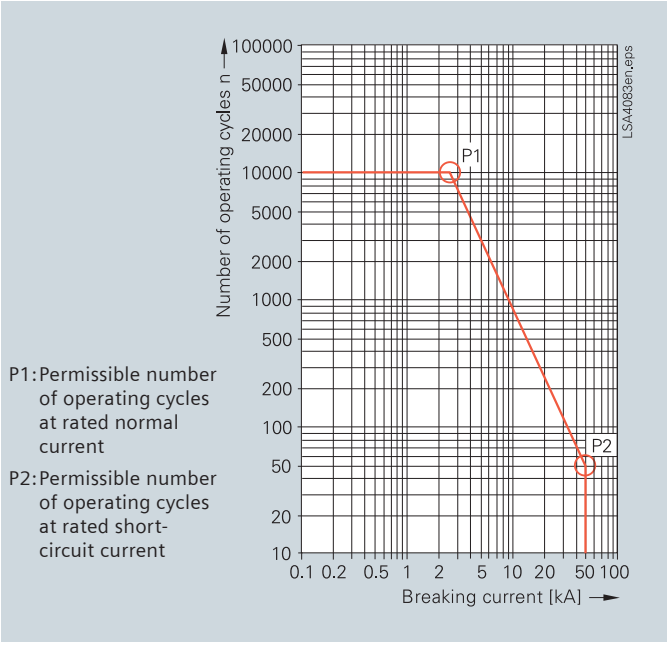

Fig. 7/8 Permissible number of operating cycles as a function of breaking current

Commissioning

Commissioning could not be easier and is supported by DIGSI 4. The status of the binary inputs can be read individually and the state of the binary outputs can be set individually. The operation of switching elements (circuit-breakers, disconnect devices) can be checked using the switching functions of the relay. The analog measured values are represented as wide-ranging operational measured values. To prevent transmission of information to the control center during maintenance, the communications can be disabled to prevent unnecessary data from being transmitted. During commissioning, all indications with test tag for test purposes can be connected to a control and protection system.

Test operation

During commissioning, all indications with test tag can be passed to a control system for test purposes.

Radial systems

General hints:
The relay at the far end (D) from the infeed has the shortest tripping time. Relays further upstream have to be time-graded against downstream relays in steps of about 0.3 s.

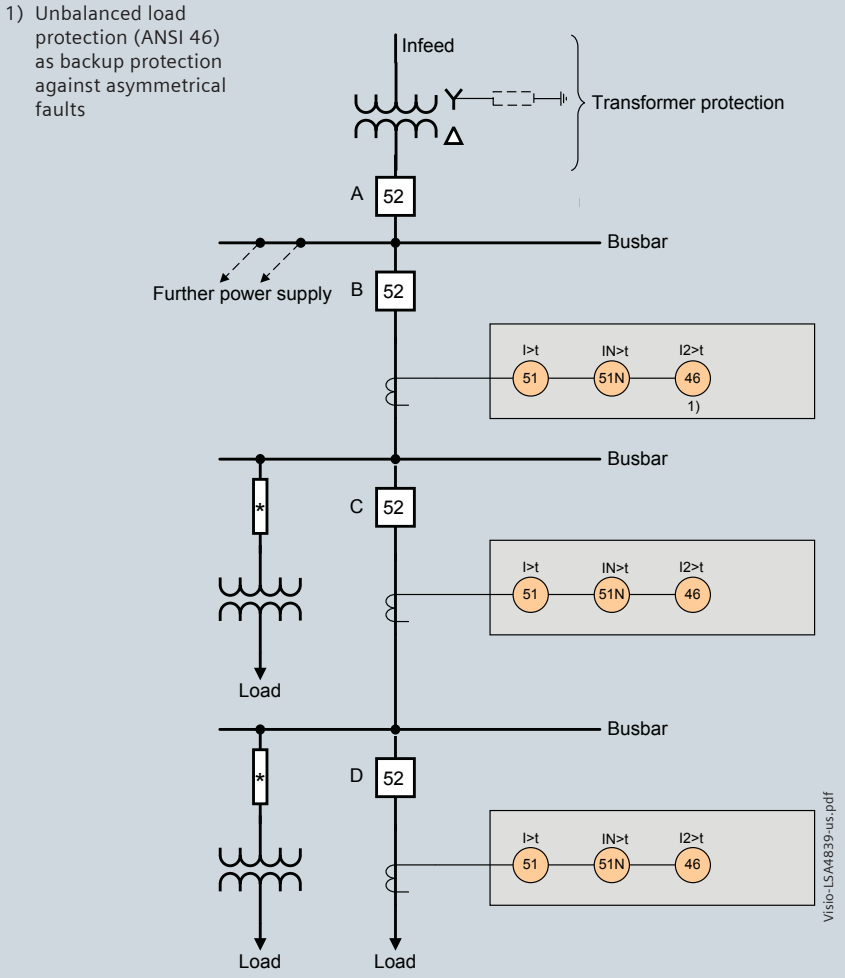

Fig. 7/9 Protection concept with overcurrent-time protection

Earth-fault detection in isolated or compensated systems

In isolated or compensated systems, an occurred earth fault can be easily found by means of sensitive directional earth-fault detection.

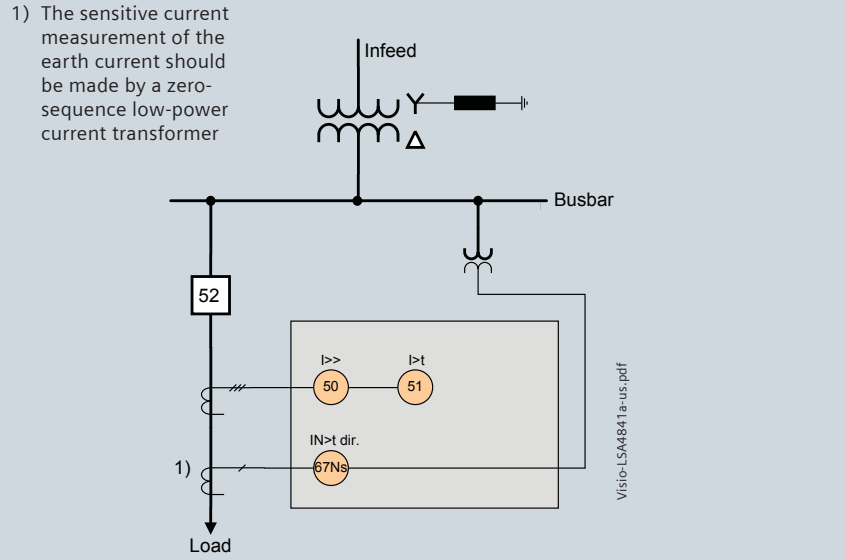

Fig. 7/10 Protection concept for directional earth-fault detection

Small and medium-sized motors < 1MW

Applicable, with effective and low-resistance infeed ($I_E \geq I_N$, Motor), to low-voltage motors and high-voltage motors with low-resistance infeed ($I_E \geq I_N$, Motor).

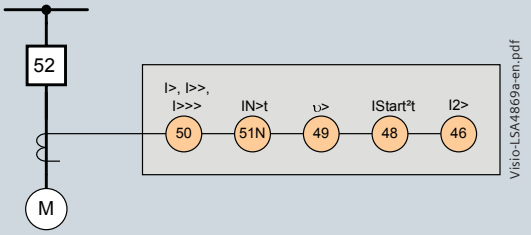

Fig. 7/11 Protection concept for small motors

High-resistance infeed

($I_E \leq I_N$, Motor)

1) The sensitive current measurement of the earth current should be made by a zero-sequence low-power current transformer

2) The sensitive directional earth-fault detection (ANSI 67Ns) is only applicable with the infeed from an isolated system or a system earthed via Petersen coil.

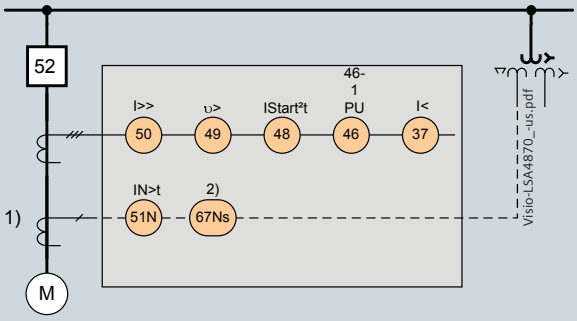

Fig. 7/12 Protection concept for medium motors

Generators < 500 kW

If a core balance current transformer for sensitive ground-fault protection is available, SIPROTEC 7SK80 should be used with sensitive ground-current input.

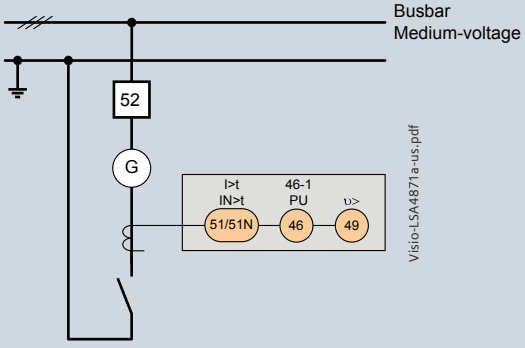

Fig. 7/13 Protection concept for smallest generators with solidly earthed neutral

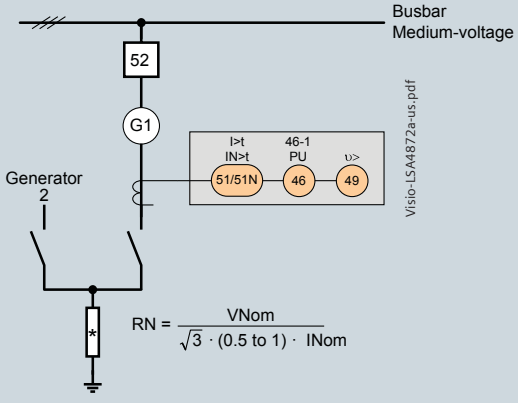

Fig. 7/14 Protection concept for smallest generators with low-resistance neutral earthing

Generators up to 1MW

Two voltage transformers in V circuit are enough.

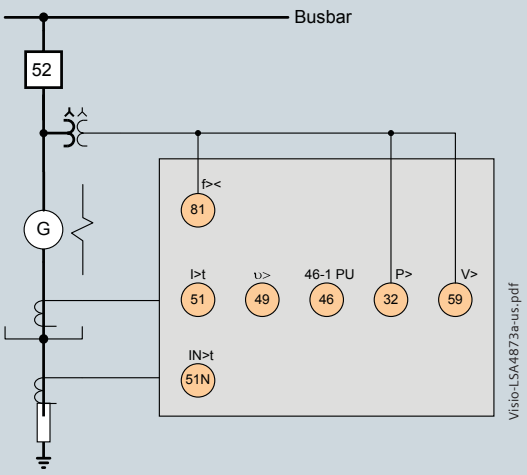

Fig. 7/15 Protection concept for small generators

Busbar protection by overcurrent relays with reverse interlocking

Applicable to distribution busbars without substantial (< 0.25 x I_N) backfeed from the outgoing feeders.

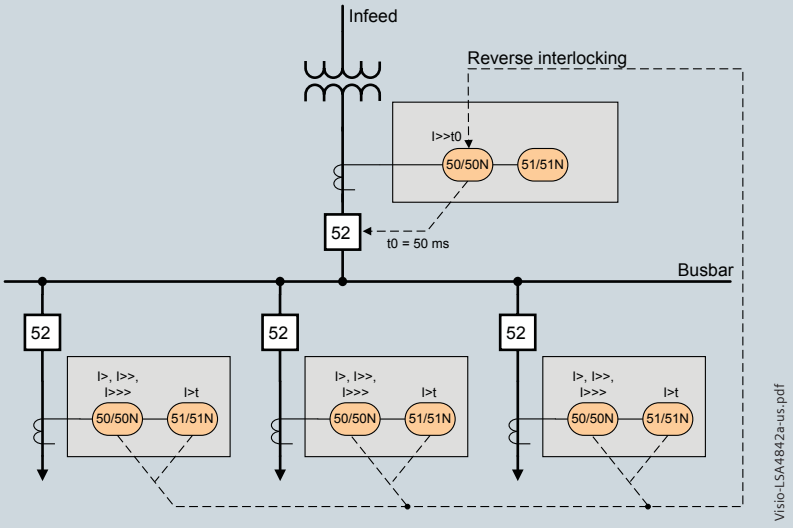

Fig. 7/16 Busbar protection with reverse interlocking

7

Line feeder with load shedding

In unstable power systems (e.g. solitary systems, emergency power supply in hospitals), it may be necessary to isolate selected consumers from the power system in order to protect the overall system. The overcurrent-time protection functions are effective only in the case of a short-circuit. Overloading of the generator can be measured as a frequency or voltage drop.

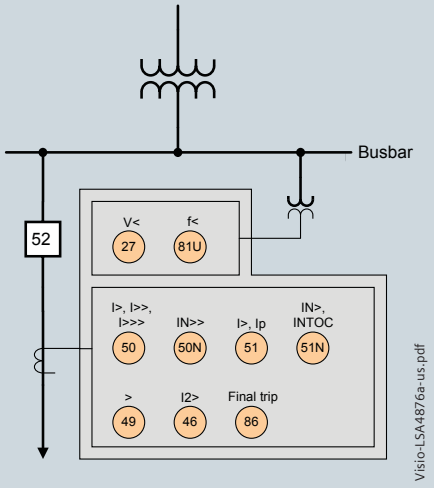

Fig. 7/17 Line feeder with load shedding

Motor protection

For short-circuit protection, the stages I>> and I_E>> are available, for example. Sudden load variations in running operation are acquired by the I_{load}> function. For isolated systems, the sensitive earth-fault detection (I_{EE}>>, V_0>) can be used. The stator is protected against thermal overload by θ, the rotor by I_2>, start-time supervision and restart inhibit. A locked rotor is detected via a binary input, and shut down as fast as required. The restart inhibit can be deactivated by an "emergency start".

The undervoltage function prevents a start when the voltage is too low; the overvoltage function prevents insulation damages.

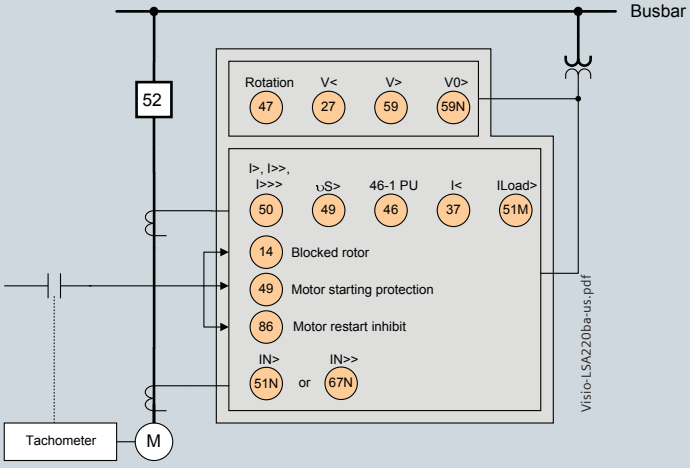

Fig. 7/18 Typical protection concept for an asynchronous high-voltage motor

Generator and Motor Protection SIPROTEC 7SK81

for Low-Power CT and VT Applications - Selection and ordering data

Product description	Order No. 1 2 3 4 5 6 7 8 9 10 11 12 13 14 15 16 17 18 19	Short code
	7SK81 □ 3 - □ □ □ □ □ - 3 □ □ □ + □ □ □	
Measuring inputs, binary inputs and outputs		
Housing 1/6 19"; 4 x I, 3 BI, 5 BO (2 Changeover), 1 life ontact	1	
Housing 1/6 19"; 4 x I, 7 BI, 8 BO (2 Changeover), 1 life contact	2	
Housing 1/6 19"; 4 x I, 3 x V, 3 BI, 5 BO (2 Changeover), 1 life contact	3	
Housing 1/6 19"; 4 x I, 3 x V, 7 BI, 8 BO (2 Changeover), 1 life contact	4	
Housing 1/6 19"; 4 x I, 3 BI, 5 BO (2 Changeover), 1 life contact, 5 RTD inputs	5	
Housing 1/6 19"; 4 x I, 3 x V, 3 BI, 5 BO (2 Changeover), 1 life contact, 5 RTD inputs	6	
Low Power Measuring Inputs	3	
Auxiliary voltage		
DC 24 V / 48 V	1	
DC 60 V / 110 V / 125 V / 220 V / 250 V, AC 115 V, AC 230 V	5	
Construction		
Flush mounting housing, screw-type terminal	E	
Region-specific default- and language settings		
Region DE, IEC, language German (language changeable)	A	
Region World, IEC/ANSI, language English (language changeable)	B	
Port B (at bottom of device)		
No port	0	
IEC 60870-5-103 or DIGSI 4/modem, electrical RS232	1	
IEC 60870-5-103 DIGSI 4/modem or RTD-box, electrical RS485	2	
IEC 60870-5-103 DIGSI 4/modem or RTD-box, optical 820 nm, ST connector	3	
PROFIBUS DP slave, electrical RS485	9	L 0 A
PROFIBUS DP slave, optical, double ring, ST connector	9	L 0 B
MODBUS, electrical RS485	9	L 0 D
MODBUS, optical 820 nm, ST connector	9	L 0 E
DNP 3.0, electrical RS485	9	L 0 G
DNP 3.0, optical 820 nm, ST connector	9	L 0 H
IEC 60870-5-103, redundant, electrical RS485, RJ45 connector	9	L 0 P
IEC 61850, 100 Mbit Ethernet, electrical, double, RJ45 connector	9	L 0 R
IEC 61850, 100 Mbit Ethernet, optical, double, LC connector	9	L 0 S
Port A (at bottom of device, in front)		
No port	0	
With Ethernet interface (DIGSI, RTD-box, not IEC 61850), RJ45 connector	6	
Measuring / fault recording		
With fault recording, average values, min/max values	3	

see next page

You will find a detailed overview of the technical data (extract of the manual) under: http://www.siemens.com/siprotec

ANSI No.	Product description	Order No.	Short code
		1 2 3 4 5 6 7 8 9 10 11 12 13 14 15 16 17 18 19	
		7SK81 □ **3** - □□□□□ - **3** □□□ + □□□	
Motor protection device		**H D 0** [2]	
	Basic functionality		
50/51	Overcurrent protection, phase $I>$, $I>>$, $I>>>$, I_p		
50N/51N	Overcurrent protection, ground $I_E>$, $I_E>>$, $I_E>>>$, I_{Ep}		
50N(s)/51N(s) [1]	Sensitive ground fault protection $I_{EE}>$, $I_{EE}>>$, I_{EEp}		
49	Thermal overload protection		
74TC	Trip-circuit supervision, TCS		
50BF	Circuit-breaker failure protection,CBFP		
46	Unbalanced-load protection		
86	Lockout		
48	Start-time supervision		
37	Undercurrent monitoring		
66/86	Restart inhibit		
14	Locked rotor protection		
51M	Load jam protection		
	Motor statistics		
	Parameter changeover		
	Monitoring functions		
	Control of circuit-breaker		
	Flexible protection functions (current parameters)		
	Inrush restraint		
	Basic functionality + Directional sensitive ground fault, voltage and frequency protection	**H E 0** [3]	
67N	Directional overcurrent protection for ground-faults, $I_E>$, $I_E>>$, I_{Ep}		
67N(s) [1]	Senitive ground-fault detection for systems with resonant or isolated neutral, $I_{EE}>$, $I_{EE}>>$, I_{EEp}		
59N	Overvoltage protection		
27/59	Under-/overvoltage protection V<, V>		
81 U/O	Under-/overfrequency protection $f<$, $f>$		
47	Phase rotation		
32/55/81R	Flexible protection functions (current and voltage parameters)		
	Protection function for voltage, power, power factor, frequency change		

1) Depending on the connected low-power current transformer the function will be either sensitive (I_{EE}) or non-sensitive (I_E).
2) Only if position 6 = **1**, **2** or **5**
3) Only if position 6 = **3**, **4** or **6**

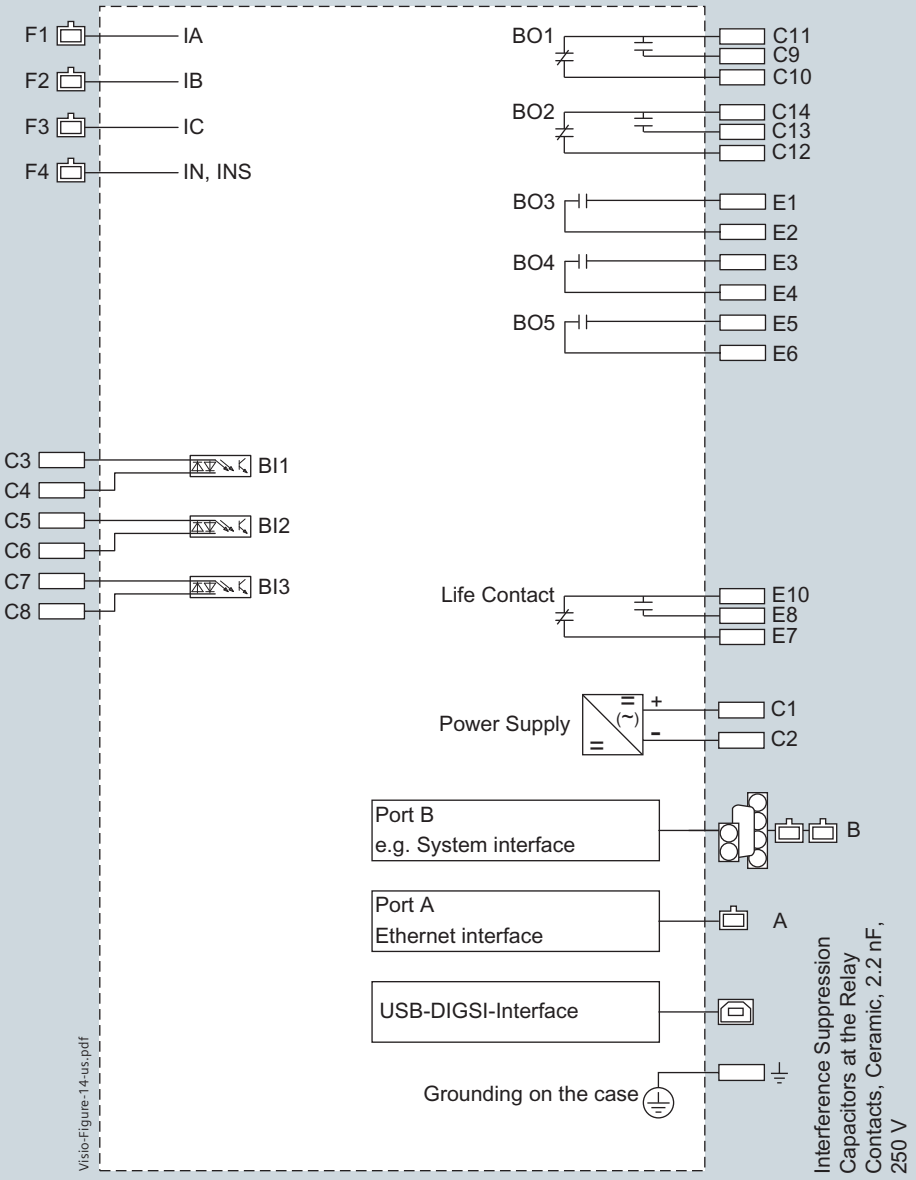

Fig. 7/19 Motor protection SIPROTEC 7SK811

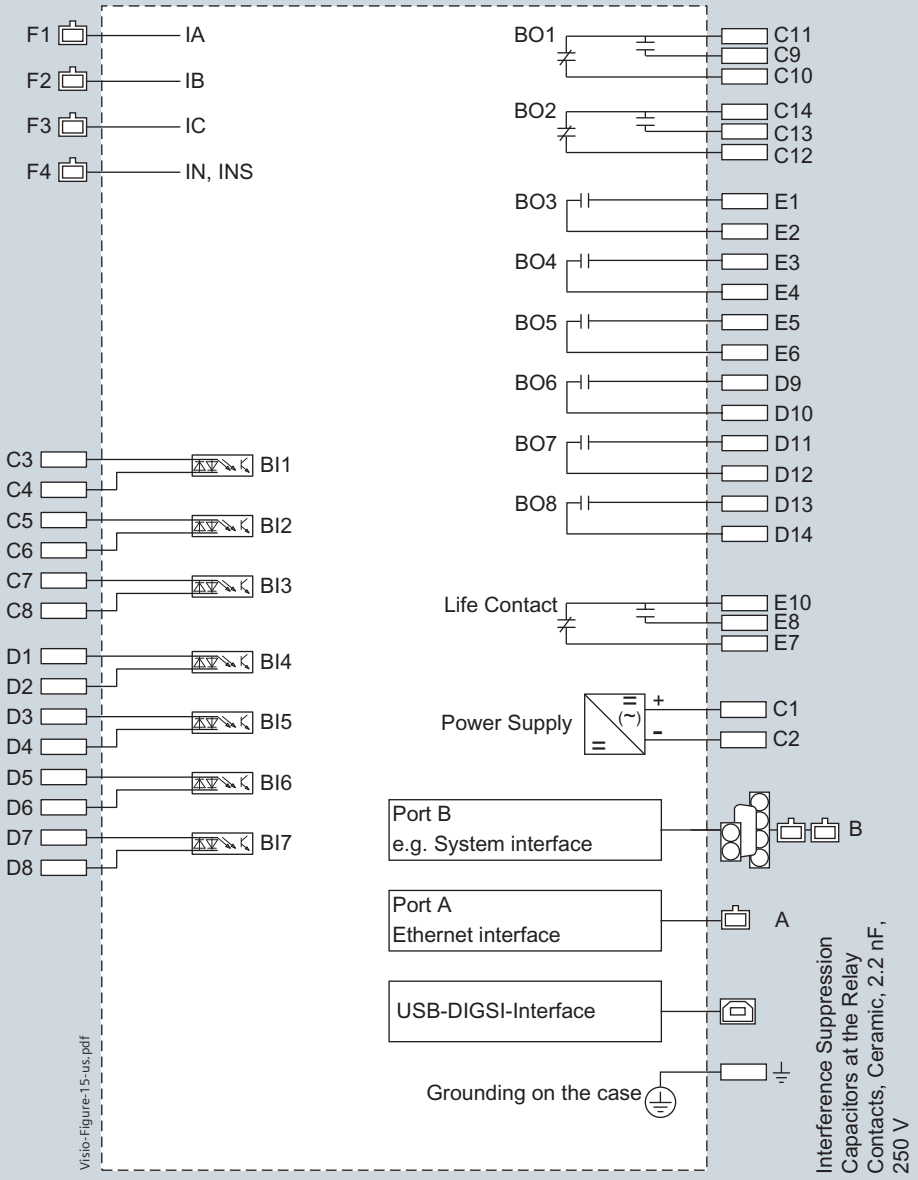

Fig. 7/20 Motor protection SIPROTEC 7SK812

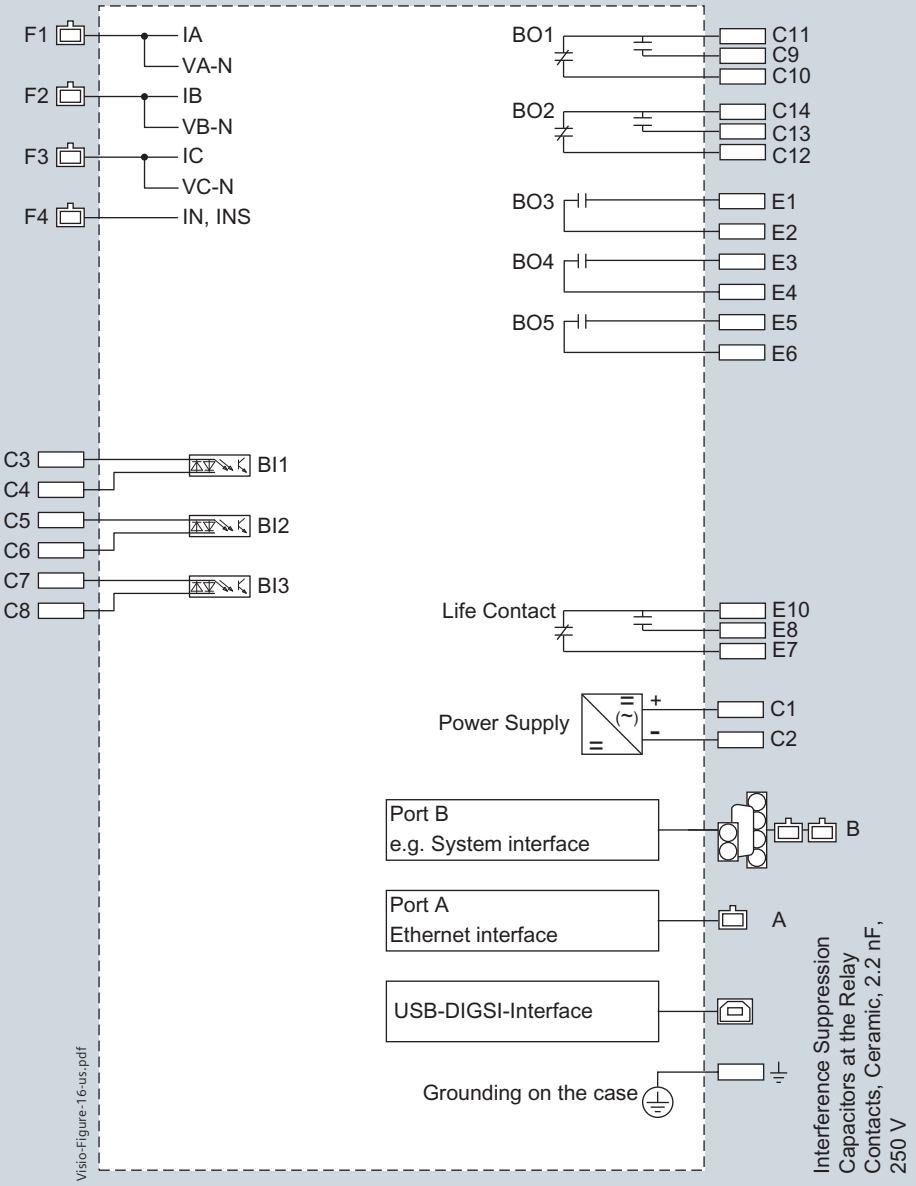

Fig. 7/21 Motor protection SIPROTEC 7SK813

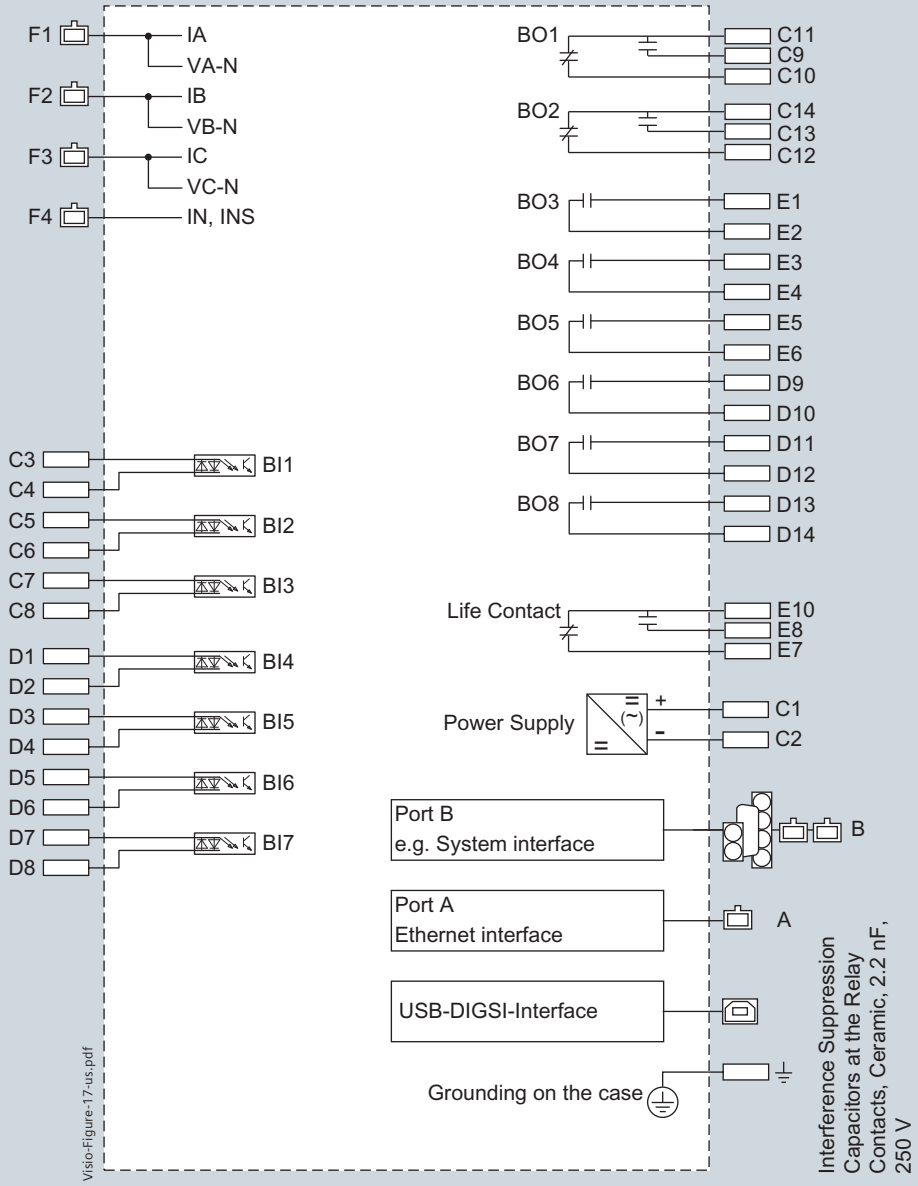

Fig. 7/22 Motor protection SIPROTEC 7SK814

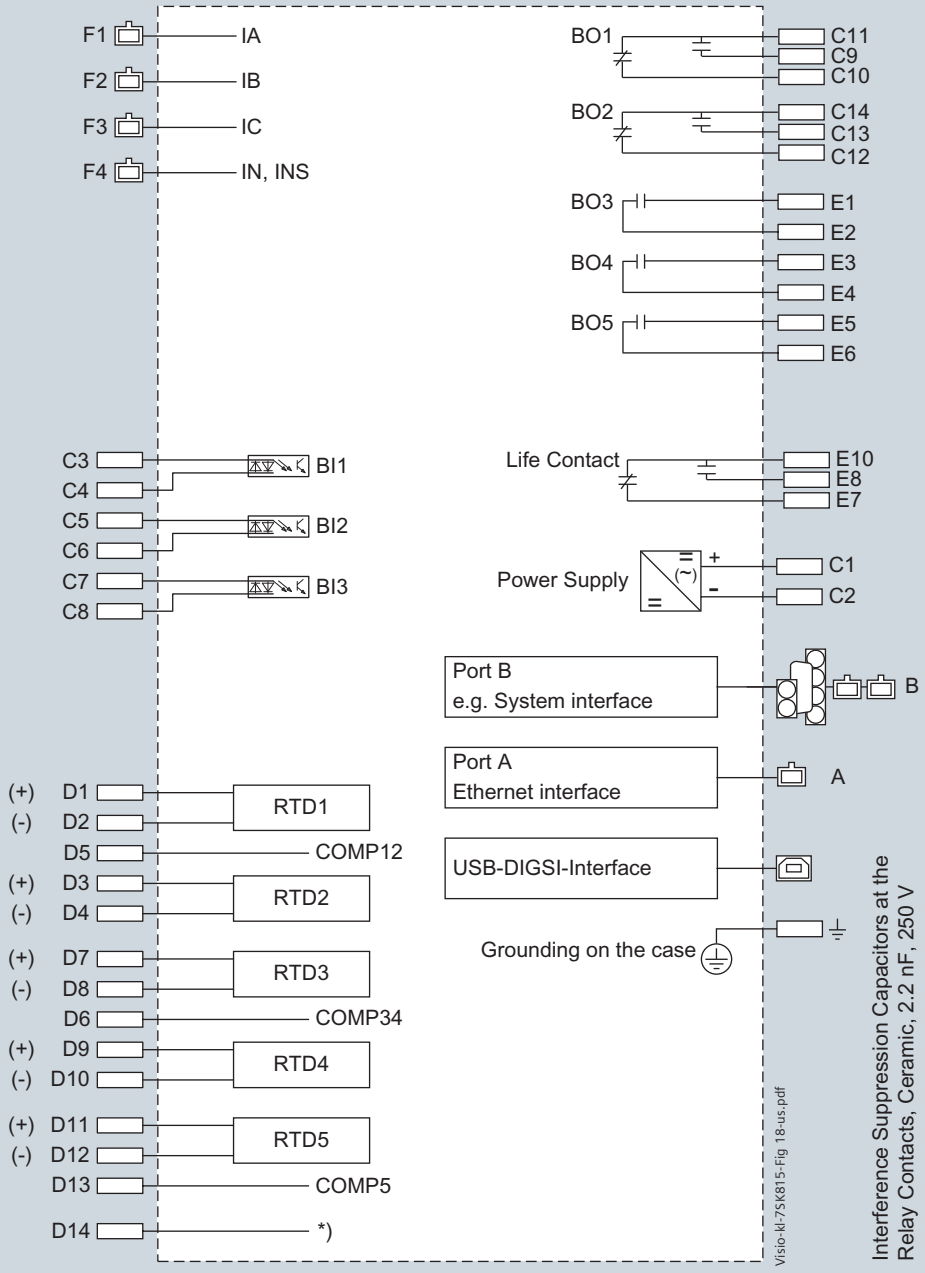

Fig. 7/23 Motor protection SIPROTEC 7SK815

*) The shielding of the connecting cable is connected directly to the shield cap.

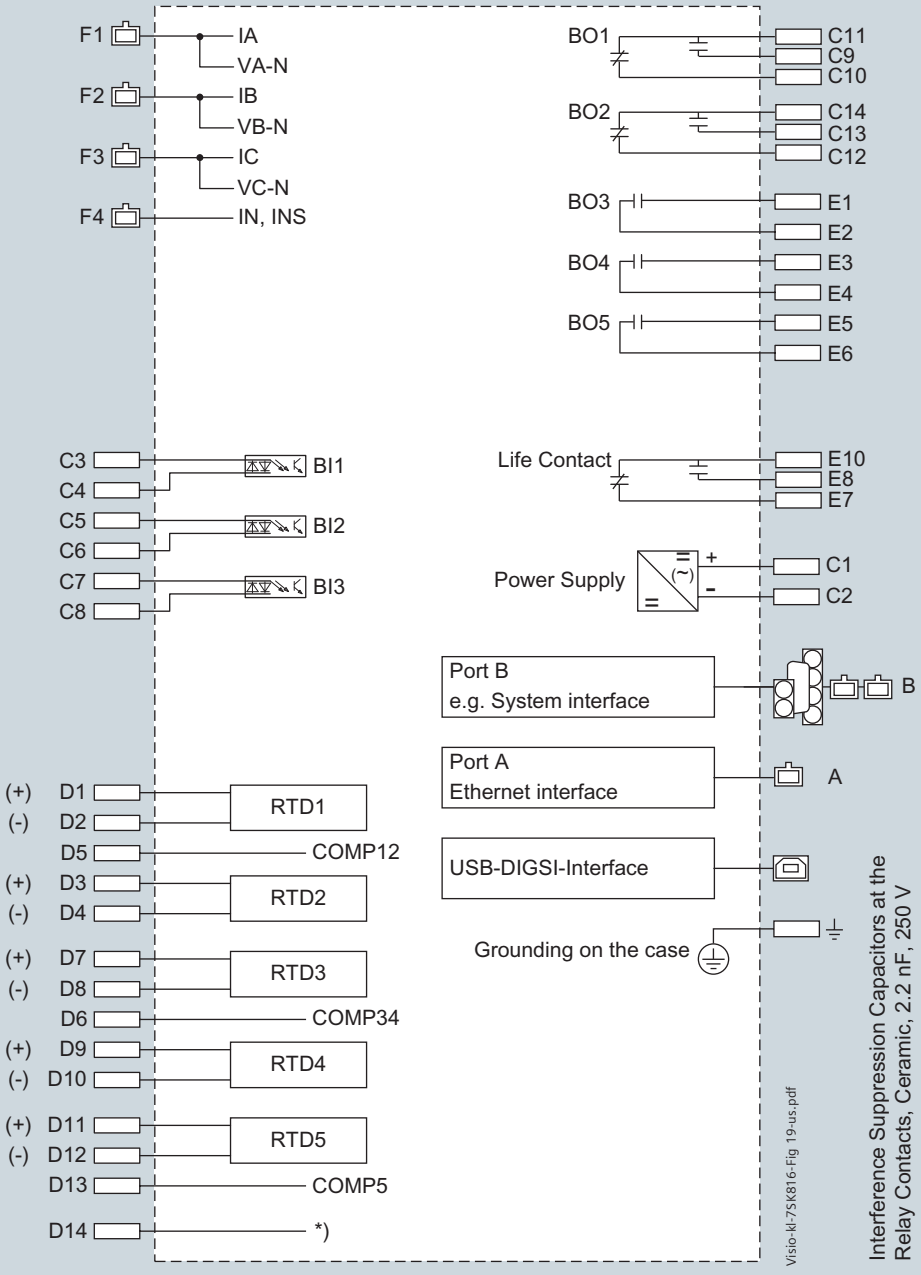

Fig. 7/24 Motor protection SIPROTEC 7SK816

*) The shielding of the connecting cable is connected directly to the shield cap.

Standard connection capabilities

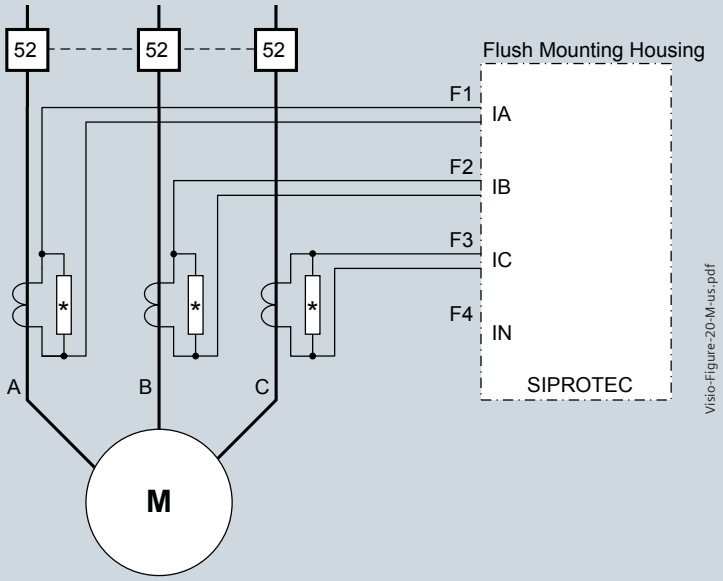

Fig. 7/25 Connection to 3 low-power CTs, normal circuit layout, appropriate for all networks

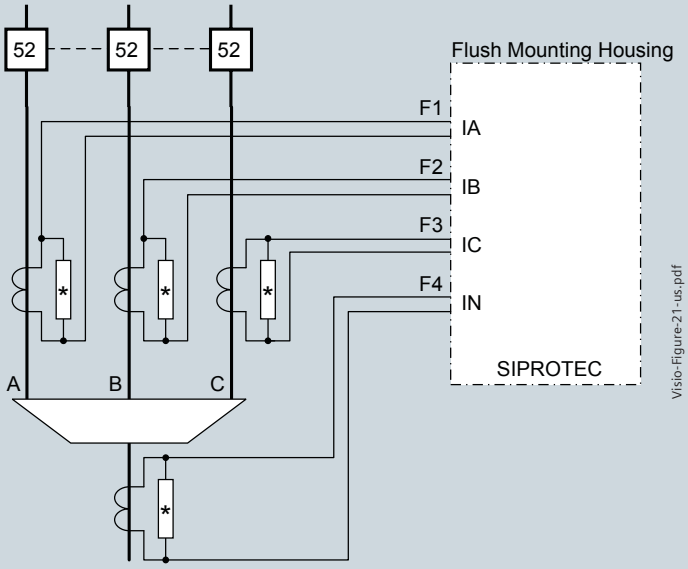

Fig. 7/26 Connection to 3 low-power CTs - additional low-power CT for sensitive ground fault detection INS - only for isolated or compensated networks

Standard connection capabilities

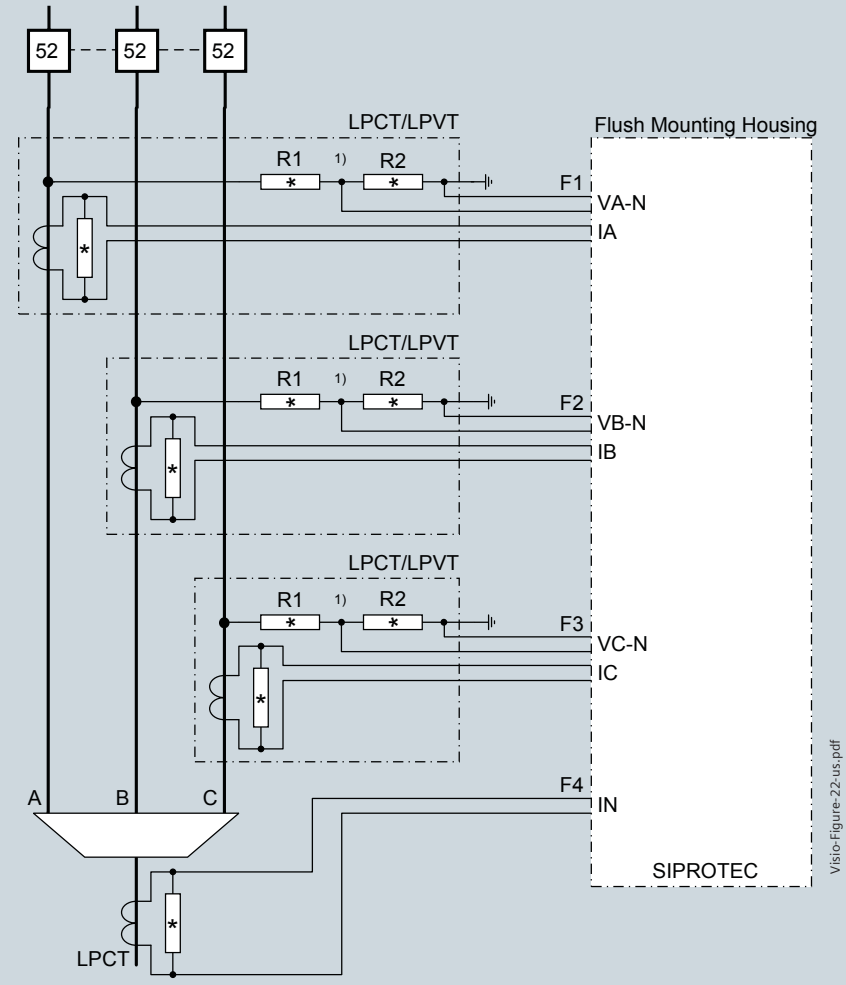

1) R1 and R2 represent the primary voltage divider.

Important! Cable Shield Grounding must be done on the Cable Side!

Fig. 7/27 Connection for combined low-power current and voltage transformers in phase L1, L2 and L3

7

Standard connection capabilities

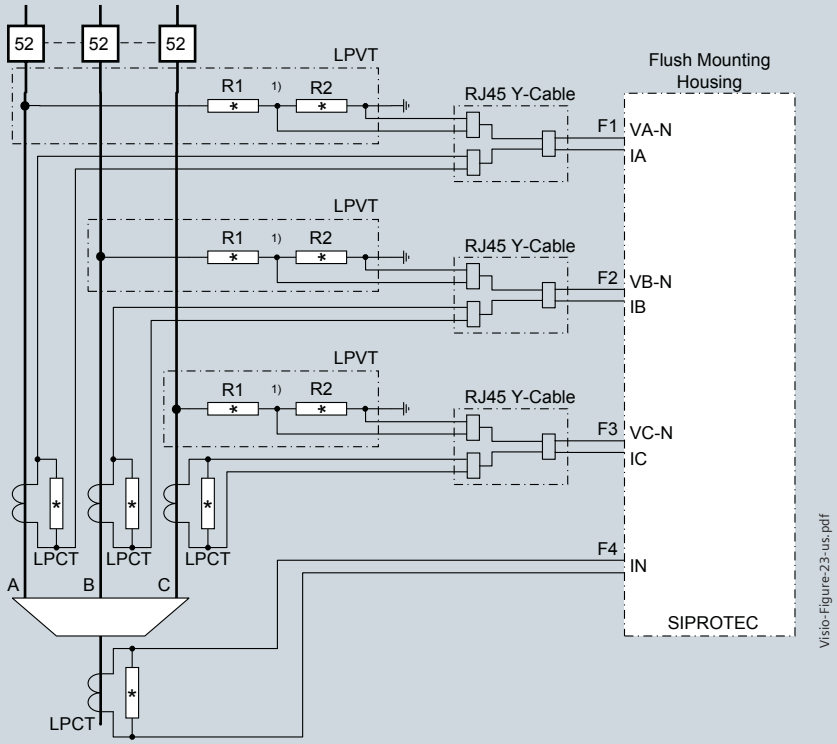

1) R1 and R2 represent the primary voltage divider.

Important! Cable Shield Grounding must be done on the Cable Side!

Fig. 7/28 Connection to low-power transformers for 3 phase currents, sensitive ground current INS and 3 phase-to-ground voltages.
The LPCT and the LPVT are connected to SIPROTEC 7SK81 through a Y-cable (refer to Fig. 7/29)

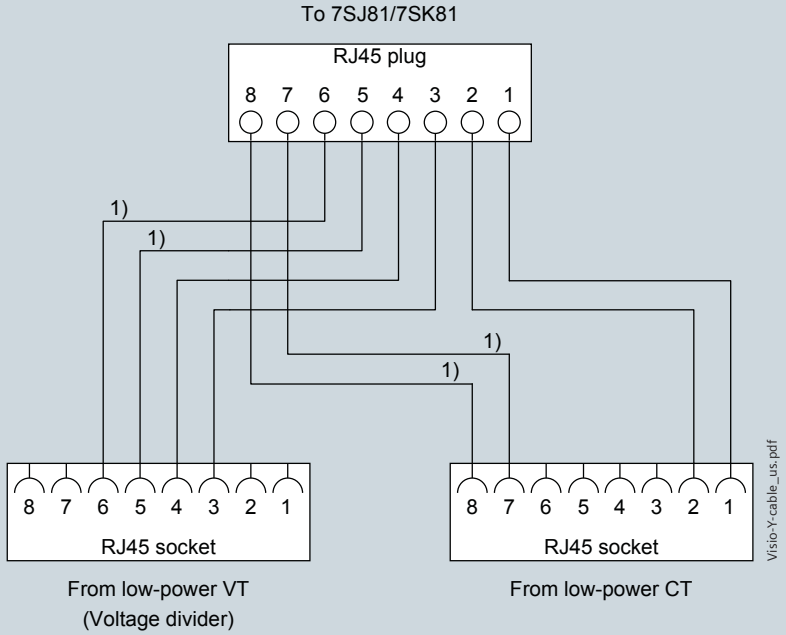

1) The connections 5, 6, 7 and 8 are optional, but not mandatory.

Fig. 7/29 Y-cable for a connection of LPCT and LPVT with SIPROTEC 7SK81

SIEMENS



Voltage and Frequency Protection 7RW80 SIPROTEC Compact

Voltage and Frequency Protection SIPROTEC 7RW80

	Page
Description	8/3
Function overview	8/4
Applications	8/5
Application sheets	8/6
Application examples	8/8
Selection and ordering data	8/10
Connection diagrams	8/12
Connection examples	8/14

You will find a detailed overview of the technical data (extract of the manual) under:
http://www.siemens.com/siprotec

8

Description

The SIPROTEC 7RW80 is a numerical, multi-function relay for connection to voltage transformers. It can be used in distribution systems, on transformers and for electrical machines. If the SIPROTEC Compact 7RW80 detects any deviation from the permitted voltage, frequency or overexcitation values, it will respond according to the values set. The relay can also be applied for the purposes of system decoupling and for load shedding if ever there is a risk of a system collapse as a result of inadmissibly large frequency drops. An integrated load restoration function allows the re-establishment of the power system after recovery of the system frequency.

The SIPROTEC 7RW80 features "flexible protection functions". Up to 20 additional protection functions can be created by the user. For example, a rate of change of frequency function or a reverse power function can be created.

The relay provides circuit-breaker control, additional primary switching devices (grounding switches, transfer switches and isolating switches) can also be controlled from the relay. Automation or PLC logic functionality is also implemented in the relay.

The integrated programmable logic (CFC) allows the user to add own functions, e.g. for the automation of switchgear (including: interlocking, transfer and load shedding schemes). The user is also allowed to generate user-defined messages. The communication module is independent from the protection. It can easily be exchanged or upgraded to future communication protocols.

Highlights

- Pluggable current and voltage terminals
- Binary input thresholds settable using DIGSI (3 stages)
- 9 programmable function keys
- 6-line display
- Buffer battery exchangeable from the front
- USB front port
- 2 additional communication ports
- Integrated switch for low-cost and redundant optical Ethernet rings
- Ethernet redundancy protocols RSTP, PRP and HSR for highest availability
- Relay-to-relay communication through Ethernet with IEC 61850 GOOSE
- Millisecond-accurate time synchronization through Ethernet with SNTP.



Fig. 8/1 SIPROTEC 7RW80 front view



Fig.8/2 SIPROTEC 7RW80 rear view

Voltage and Frequency Protection SIPROTEC 7RW80

Function overview

Protection functions	IEC	ANSI
Undervoltage/overvoltage protection	$V<$, $V>$	27/59
Rate-of-voltage-change protection	V_E, $V_0>$	59N [1)]
Overfrequency/underfrequency protection	$f<$, $f>$	81O/U
Load restoration		81LR
Jump of voltage vector	$\Delta\varphi>$	
Overexcitation protection	V/f	24
Phase-sequence-voltage supervision	$V_2>$, phase sequence	47
Synchrocheck		25
Rate-of-frequency-change protection	df/dt	81R
Rate-of-voltage-change protection	dV/dt	27R/59R
Trip circuit supervision	AKU	74TC
Lockout		86

Table 8/1 Function overview

Control functions/programmable logic

- Commands for the ctrl. of CB, disconnect switches (isolators/isolating switches)
- Control through keyboard, binary inputs, DIGSI 4 or SCADA system
- User-defined PLC logic with CFC (e.g. interlocking).

Monitoring functions

- Operational measured values V, f
- Minimum and maximum values
- Trip circuit supervision
- Fuse failure monitor
- 8 oscillographic fault records.

Communication interfaces

- System/service interface
  - IEC 61850 Edition 1 and 2
  - IEC 60870-5-103
  - PROFIBUS-DP
  - DNP 3.0
  - MODBUS RTU
  - Ethernet redundancy protocols RSTP, PRP and HSR
- Ethernet interface for DIGSI 4
- USB front interface for DIGSI 4.

Hardware

- 3 voltage transformers
- 3/7 binary inputs (thresholds configurable using software)
- 5/8 binary outputs (2 changeover)
- 1 life contact
- Pluggable terminal blocks.

8

1) Not available if function package “Q” or “E” (synchrocheck) is selected.

The SIPROTEC 7RW80 unit is a numerical protection device that can perform control and monitoring functions and therefore provide the user with a cost-effective platform for power system management, that ensures reliable supply of electrical power to the customers. The ergonomic design makes control easy from the relay front panel. A large, easy-to-read display was a key design factor.

Control

The integrated control function permits control of disconnect devices, grounding switches or circuit-breakers through the integrated operator panel, binary inputs, DIGSI 4 or the control or automation system (e.g. SICAM)

Programmable logic

The integrated logic characteristics (CFC) allow the user to add own functions for automation of switchgear (e.g. interlocking) or switching sequence. The user can also generate user-defined messages. This functionality can form the base to create extremely flexible transfer schemes.

Operational measured value

Extensive measured values (e.g. I, V), metered values (e.g.W_p,W_q) and limit values (e.g. for voltage, frequency) provide improved system management.

Operational indication

Event logs, trip logs, fault records and statistics documents are stored in the relay to provide the user or operator with all the key data required to operate modern substations.

Line protection

For the enhancement of the feeder protection the 7RW80 provides several stages for voltage and frequency protection.

Generator and transformer protection

Through implemented voltage, frequency and overexcitation protection the SIPROTEC 7RW80 can be used for generators and transformers in case of defective voltage or frequency control, full load rejection or operation in islanding generation systems.

System decoupling and load shedding

For system decoupling and load shedding the SIPROTEC 7RW80 provides voltage, frequency, rate-of-frequency-change and rate-of-voltage-change protection.

Load restoration

For power system recovery, frequency protection and load restoration are available in SIPROTEC 7RW80.

Switchgear cubicles for high/medium voltage

All units are designed specifically to meet the requirements of high/medium-voltage applications. In general, no separate measuring instruments (e.g., for current, voltage, frequency, ...) or additional control components are necessary.

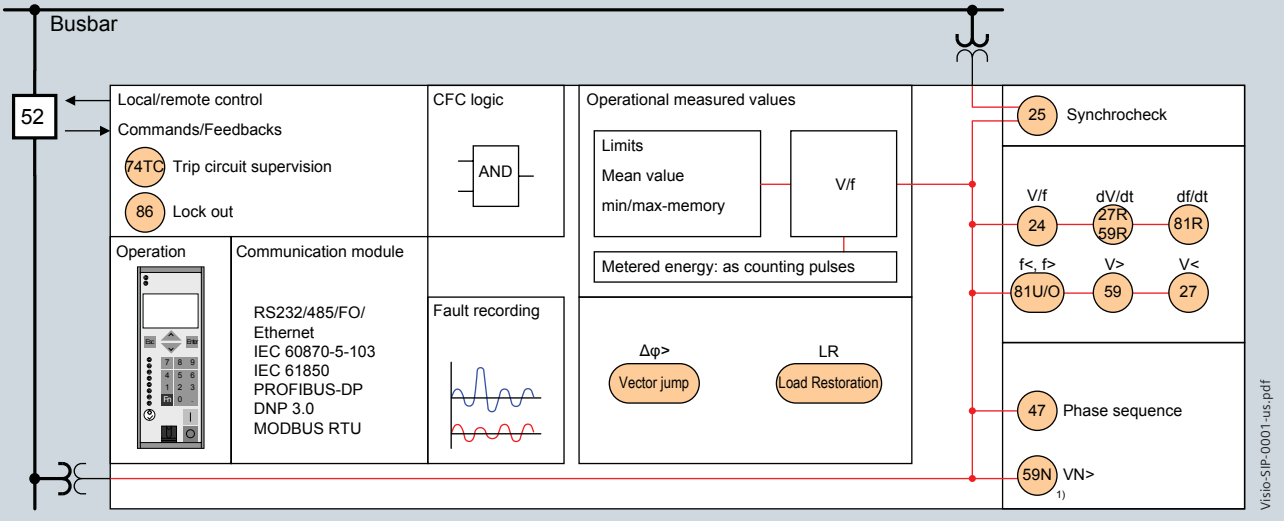

1) Not available if function package "Q" (synchrocheck) is selected.

Fig. 8/3 Function diagram

Protection functions

Undervoltage protection (ANSI 27)

The two-element undervoltage protection provides protection against dangerous voltage drops (especially for electric machines). Applications include the isolation of generators or motors from the network to avoid undesired operating conditions and a possible loss of stability. Proper operating conditions of electrical machines are best evaluated with the positive-sequence quantities. The protection function is active over a wide frequency range of 25 to 70 Hz. The function can operate either with phase-to-phase, phase-to-ground or positive phase-sequence voltage. Three-phase and single-phase connections are possible. In addition a user definable curve with up to 20 value pairs is available.

Overvoltage protection (ANSI 59)

The two-element overvoltage protection detects unwanted network and machine overvoltage conditions. The function can operate either with phase-to-phase, phase-to-ground, positive phase-sequence or negative phase-sequence voltage. Three-phase and single-phase connections are possible. In addition, a user definable curve with up to 20 value pairs is available.

Frequency protection (ANSI 81O/U)

Frequency protection can be used for overfrequency and underfrequency protection. Electric machines and parts of the system are protected from unwanted frequency deviations. Unwanted frequency changes in the network can be detected and the load can be removed at a specified frequency setting. Frequency protection can be used over a wide frequency range of 25 to 70 Hz. There are four elements (individually set as overfrequency, underfrequency or OFF) and each element can be delayed separately. Blocking of the frequency protection can be performed by activating a binary input or by using an undervoltage element.

Load restoration

The load restoration function provides an automatic reconnection of power system parts when the system frequency has recovered after load shedding. Four load restoration stages are available. They can be switched on and off separately. If the frequency conditions allow the assumption of sufficient generation resources, the load restoration function will consecutively reconnect small load parts at specified time intervals.

Overexcitation protection (ANSI 24)

The overexcitation protection serves for detection of an unpermissible high induction (proportional to *V*/*f*) in generators or transformers, which leads to thermal overloading. This may occur when starting up, shutting down under full load, with weak systems or under isolated operation. The inverse characteristic can be set via eight points derived from the manufacturer data. In addition, a definite-time alarm stage and an instantaneous stage can be used. For calculation of the *V*/*f* ratio, frequency and also the highest of the three line-to-line voltages are used. The frequency range that can be monitored comprises 25 to 70 Hz.

Jump of voltage vector

Monitoring the phase angle in the voltage is a criterion for identifying an interrupted infeed. If the incoming line should fail, the abrupt current discontinuity leads to a phase angle jump in the voltage. This is measured by means of a delta process. The command for opening the generator or coupler circuit-breaker will be issued if the set threshold is exceeded.

Flexible protection functions

SIPROTEC 7RW80 enables the user to easily add up to 20 additional protection functions. Parameter definitions are used to link standard protection logic with any chosen characteristic quantity (measured or calculated quantity). The standard logic consists of the usual protection elements such as the pickup set point, the set delay time, the TRIP command, a block function, etc.

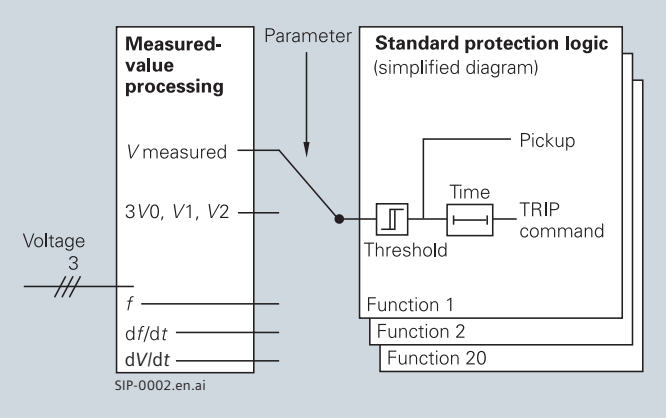

Fig. 8/4 Flexible protection functions

The mode of operation for voltage quantities can be three-phase or single-phase. Almost all quantities can be operated with ascending or descending pickup stages (e.g. under and overvoltage). All stages operate with protection priority or speed.

Protection functions/stages available are based on the available measured analog quantities:

Function	ANSI
$V<$, $V>$, $V_E>$	27, 59, 59N
$3V_0>$, $V_1><$, $V_2><$	59N, 47
$f><$	81O, 81U
$df/dt><$	81R
dV/dt	27R/59R

Table 8/2 Available flexible protection functions

For example, the following can be implemented:

- Rate-of-frequency-change protection (ANSI 81R)
- Rate-of-voltage-change protection (ANSI 27R/59R).

Synchrocheck, synchronizing function (ANSI 25)

When closing a circuit-breaker, the units can check whether two separate networks are synchronized. Voltage-, frequency- and phase-angle-differences are checked to determine whether synchronous conditions exist.

Lockout (ANSI 86)

All binary output statuses can be memorized. The LED reset key is used to reset the lockout state. The lockout state is also stored in the event of supply voltage failure. Reclosure can only occur after the lockout state is reset.

Trip circuit supervision (ANSI 74TC)

One or two binary inputs can be used for monitoring the circuit-breaker trip coil including its incoming cables. An alarm signal is generated whenever the circuit is interrupted.

Customized functions

Additional functions can be implemented using CFC or flexible protection functions.

Further functions

Measured values

The r.m.s. values are calculated from the acquired voltages along with the frequency. The following functions are available for measured value processing:

- Voltages V_{L1}, V_{L2}, V_{L3}, V_{L1L2}, V_{L2L3}, V_{L3L1}
- Symmetrical components V_1, V_2, V_0
- Frequency
- Mean as well as minimum and maximum voltage values
- Operating hours counter
- Limit value monitoring
  Limit values can be monitored using programmable logic in the CFC. Commands can be derived from this limit value indication
- Zero suppression
  In a certain range of very low measured values, the value is set to zero to suppress interference.

Commissioning

Commissioning could not be easier and is supported by DIGSI 4. The status of the binary inputs can be read individually and the state of the binary outputs can be set individually. The operation of switching elements (circuit-breakers, disconnect devices) can be checked using the switching functions of the relay. The analog measured values are represented as wide-ranging operational measured values. To prevent transmission of information to the control center during maintenance, the communications can be disabled to prevent unnecessary data from being transmitted. During commissioning, all indications with test tag for test purposes can be connected to a control and protection system.

Test operation

During commissioning, all indications with test tag can be passed to a control system for test purposes.

Application examples

Line feeder with load shedding

In unstable power systems (e.g. solitary systems, emergency power supply in hospitals), it may be necessary to isolate selected consumers from the power system in order to protect the overall system.

The overcurrent protection functions are effective only in the case of a short-circuit.

Overloading of the generator can be measured as a frequency or voltage drop.

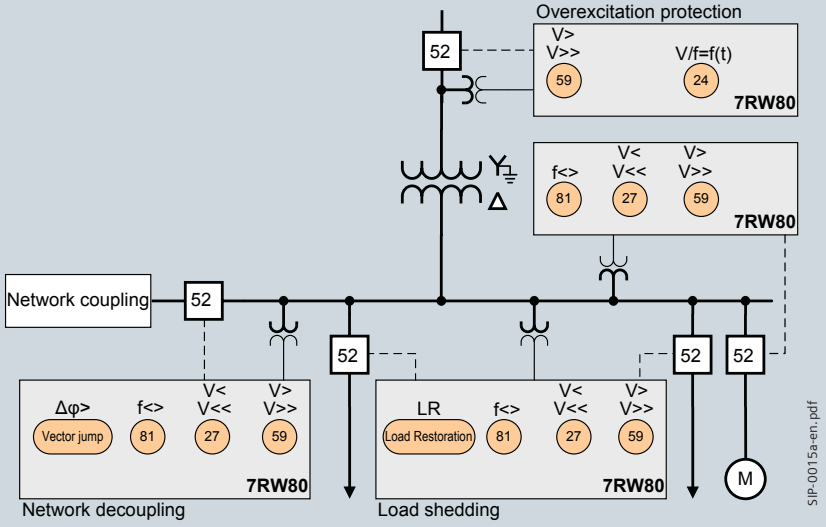

Fig. 8/5 Application example 7RW80

Load shedding with rate-of-frequency-change protection

From the measured frequency, the frequency difference is determined over a time interval. It corresponds to the momentary frequency change.

It is thus possible to quickly detect any major load drops in the power system, to disconnect certain consumers from the system, and to restore the system to stability. Unlike frequency protection, rate-of-frequency-change-protection already reacts before the pickup threshold of the frequency protection is reached.

The pickup value depends on the application, and follows the conditions of the power system. The rate-of-frequency-change protection function can also be used for the purposes of system decoupling.

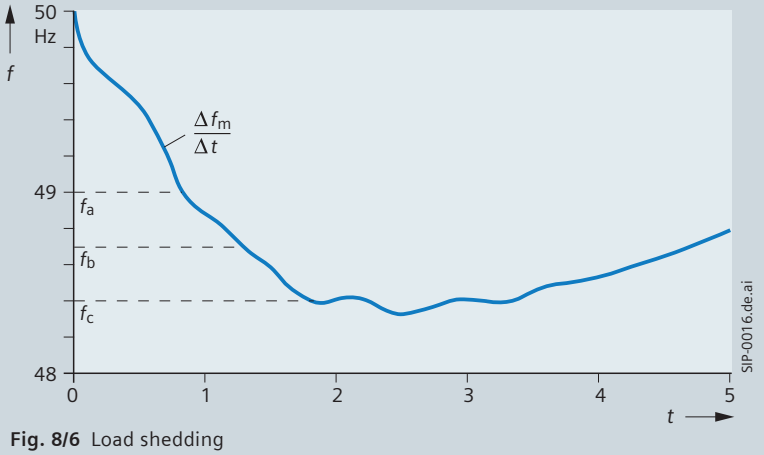

Fig. 8/6 Load shedding

Synchrocheck

Where two system sections are interconnected, the synchrocheck determines whether the connection is permissible without danger to the stability of the power system. In the example, load is supplied from a generator to a busbar through a transformer. The vector group of the transformer can be considered by means of a programmable angle adjustment, so that no external adjustment elements are necessary. Synchrocheck can be used for auto-reclosure, as well as for control functions (local or remote).

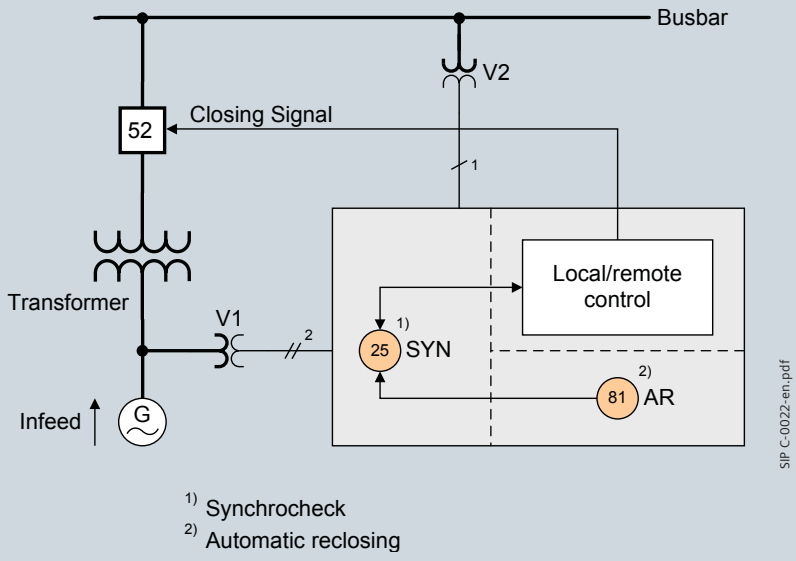

Fig. 8/7 Measurement of busbar and feeder voltage for synchronization

Voltage and Frequency Protection SIPROTEC 7RW80

Selection and ordering data

Product description	Order No. 1 2 3 4 5 6 7 8 9 10 11 12 13 14 15 16 17 18 19 — 7RW80 □ 0 - □ □ □ □ □ - □ □ □ □ + □ □ □	Short code
Voltage and frequency relay		
Housing, binary inputs and outputs		
Housing 1/6 19", 3x V, 3 BI, 5 BO [1], 1 life contact	1	
Housing 1/6 19", 3x V, 7 BI, 8 BO [1], 1 life contact	2	
Rated auxiliary voltage		
DC 24 V/48 V	1	
DC 60 V/110 V/125 V/220 V/250 V, AC 115 V, AC 230 V	5	
Unit version		
Surface mounting housing, screw-type terminal	B	
Flush mounting housing, screw-type terminal	E	
Region-specific default- and language settings		
Region DE, IEC, language German [2], standard front	A	
Region World, IEC/ANSI, language English [2], standard front	B	
Region US, ANSI, language US-English [2], US front	C	
Region FR, IEC/ANSI, language French [2], standard front	D	
Region World, IEC/ANSI, language Spanish [2], standard front	E	
Region World, IEC/ANSI, language Italian [2], standard front	F	
Region RUS, IEC/ANSI, language Russian [2], standard front	G	
Region CHN, IEC/ANSI, language Chinese [3], chinese front	K	
Port B (at bottom of device, rear)		
No port	0	
IEC 60870-5-103 or DIGSI 4/modem, electrical RS232	1	
IEC 60870-5-103 or DIGSI 4/modem, electrical RS485	2	
IEC 60870-5-103 or DIGSI 4/modem, optical 820 nm, ST connector	3	
PROFIBUS DP slave, electrical RS485	9	L 0 A
PROFIBUS DP slave, optical, double ring, ST connector	9	L 0 B
MODBUS, electrical RS485	9	L 0 D
MODBUS, optical 820 nm, ST connector	9	L 0 E
DNP 3.0, electrical RS485	9	L 0 G
DNP 3.0, optical 820 nm, ST connector	9	L 0 H
IEC 61850, 100 Mbit Ethernet, electrical, double, RJ45 connector	9	L 0 R
IEC 61850, 100 Mbit Ethernet, optical, double, LC connector	9	L 0 S
Port A (at bottom of device, front)		
No port	0	
With Ethernet interface (DIGSI, not IEC 61850), RJ45 connector	6	
Measuring / fault recording		
With fault recording, average values, min/max values	1	

see next page

1) 2 changeover/Form C.
2) Language selectable
3) Language not changeable

You will find a detailed overview of the technical data (extract of the manual) under: http://www.siemens.com/siprotec

ANSI No.	Product description	Order No.	Short code
		1 2 3 4 5 6 7 8 9 10 11 12 13 14 15 16 17 18 19	
		7RW80 □0-□□□□□-□ D □0+□□□	
	Voltage and frequency protection		A
27/59	Under/Overvoltage		
64/59N	Displacement voltage		
81U/O	Under/Overfrequency		
47	Phase rotation		
74TC	Trip circuit supervision		
86	Lockout		
	Parameter changeover		
	Monitoring functions		
	Control of circuit-breaker		
27R/59R/81R	Flexible protection functions (voltage parameters): Rate-of-frequency change, rate-of-voltage change		
	Voltage, frequency protection and load restoration		B
27/59	Under/Overvoltage		
64/59N	Displacement voltage		
81U/O	Under/Overfrequency		
	Load restoration		
47	Phase rotation		
74TC	Trip circuit supervision		
86	Lockout		
	Parameter changeover		
	Monitoring functions		
	Control of circuit-breaker		
27R/59R/81R	Flexible protection functions (voltage parameters): Rate-of-frequency change, rate-of-voltage change		
	Voltage, frequency protection and synchrocheck		C
27/59	Under/Overvoltage		
81U/O	Under/Overfrequency		
25	Synchrocheck		
47	Phase rotation		
74TC	Trip circuit supervision		
86	Lockout		
	Parameter changeover		
	Monitoring functions		
	Control of circuit-breaker		
27R/59R/81R	Flexible protection functions (voltage parameters): Rate-of-frequency change, rate-of-voltage change		
	Voltage, frequency, overexcitation protection and vector jump		D
27/59	Under/Overvoltage		
64/59N	Displacement voltage		
81U/O	Under/Overfrequency		
24	Overexcitation		
	Vector jump		
47	Phase rotation		
74TC	Trip circuit supervision		
86	Lockout		
	Parameter changeover		
	Monitoring functions		
	Control of circuit-breaker		
27R/59R/81R	Flexible protection functions (voltage parameters): Rate-of-frequency change, rate-of-voltage change		
	Voltage, frequency, overexcitation protection and vector jump, load restoration and synchrocheck		E
27/59	Under/Overvoltage		
81U/O	Under/Overfrequency		
24	Overexcitation		
	Vector jump		
	Load restoration		
25	Synchrocheck		
47	Phase rotation		
74TC	Trip circuit supervision		
86	Lockout		
	Parameter changeover		
	Monitoring functions		
	Control of circuit-breaker		
27R/59R/81R	Flexible protection functions (voltage parameters): Rate-of-frequency change, rate-of-voltage change		

Connection diagrams

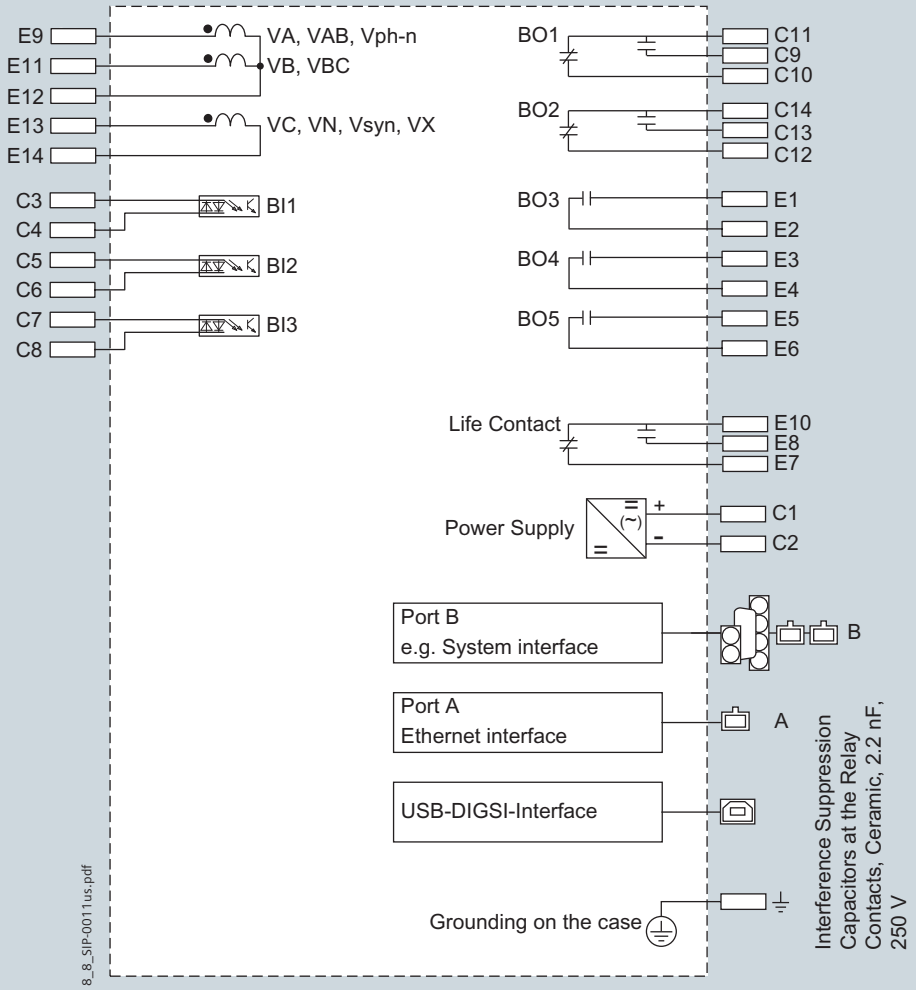

Fig. 8/8 Voltage and frequency protection SIPROTEC 7RW801

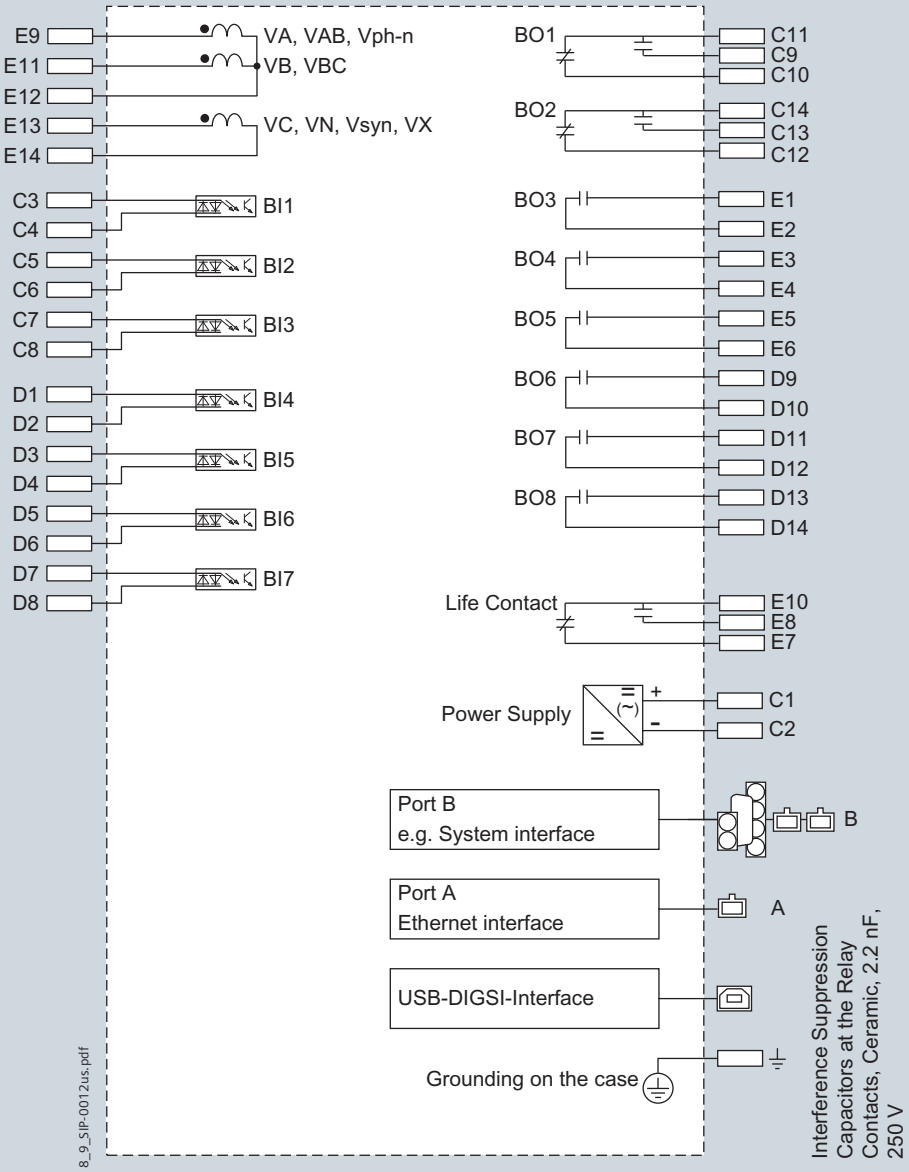

Fig. 8/9 Voltage and frequency protection SIPROTEC 7RW802

Connection examples

Standard connection

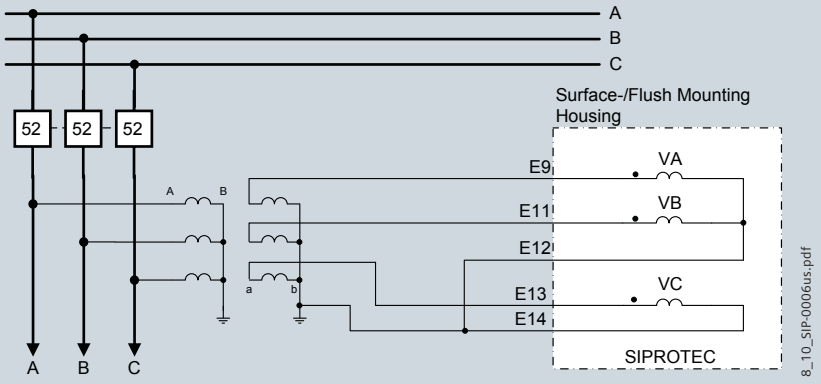

Fig. 8/10 Example for connection type "V_{AN}, V_{BN}, V_{CN}" load-side voltage connection

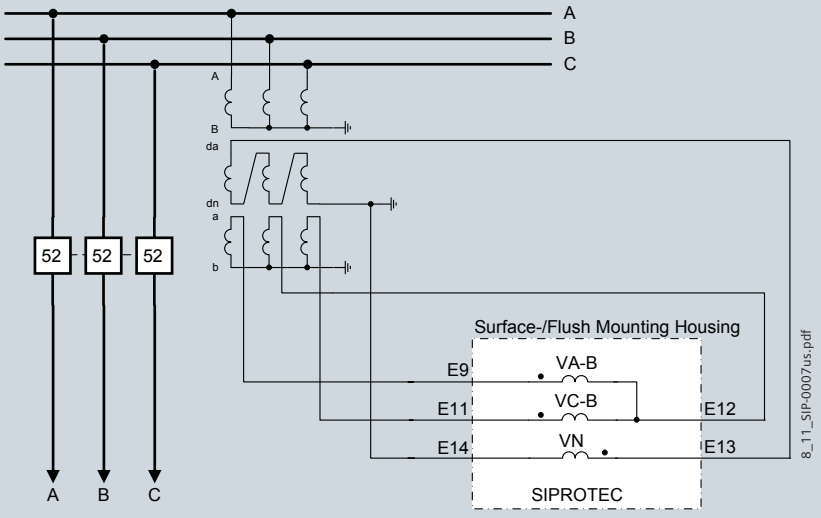

Fig. 8/11 Voltage transformer connections to two voltage transformers (phase-to-phase voltages) and broken data winding (da-dn)

Connection V_x

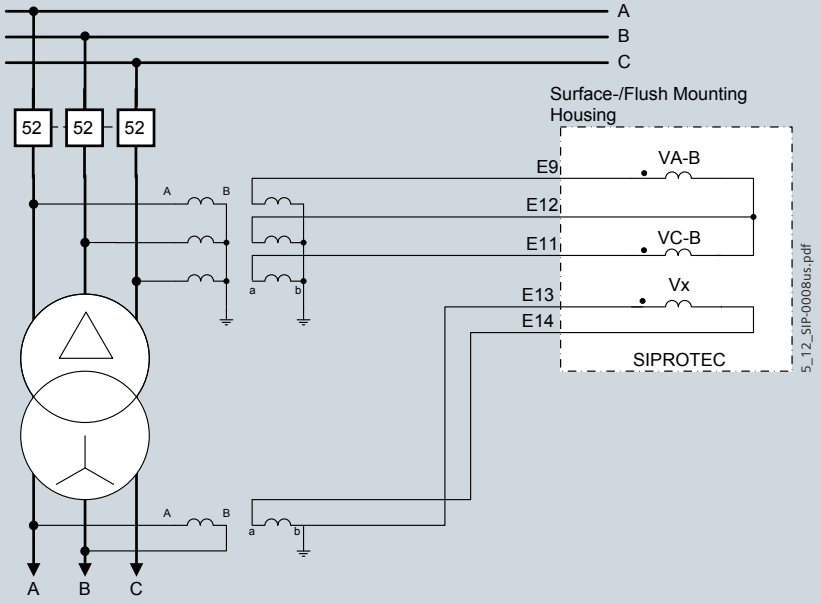

Fig. 8/12 Example for connection type "V_{AB}, V_{BC}, V_x"

Connection for synchrocheck

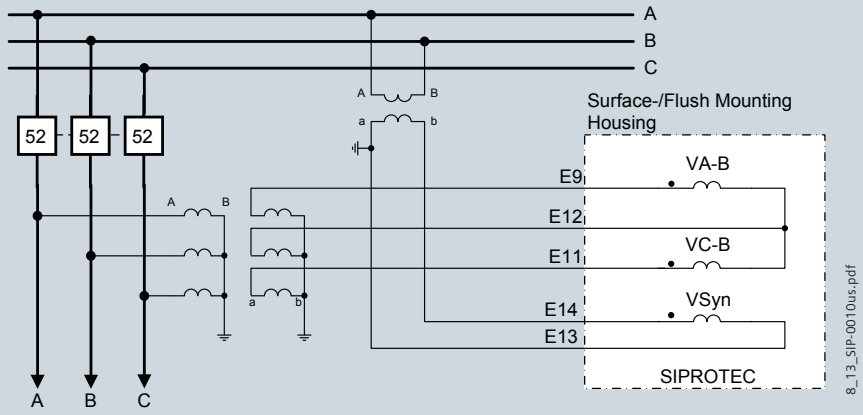

Fig. 8/13 Example for connection type "V_{AB}, V_{BC}, V_{SYN}"

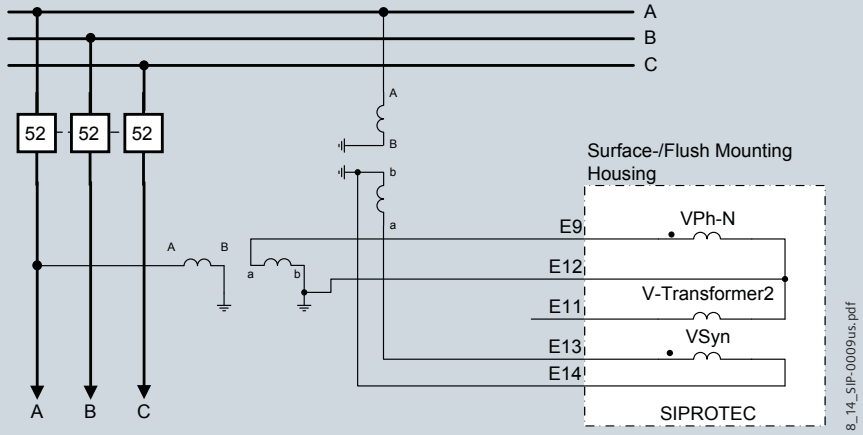

Fig. 8/14 Example for connection type "V_{ph-n}, V_{syn}".
The connection can be established at any one of the three phases.
The phase must be the same for V_{ph-n} and V_{syn}.

8

SIEMENS



Feeder Protection 7SC80
SIPROTEC Compact

Feeder Protection SIPROTEC 7SC80

	Page
Description	9/3
Function overview	9/4
Applications	9/5
Construction and hardware	9/6
Transformers	9/7
Function description	9/8
Application examples	9/14
Selection and ordering data	9/20
Connection diagrams	9/22
Connection examples	9/26
Connection types	9/30
SNTP Server/Master	9/31

You will find a detailed overview of the technical data (extract of the manual) under:
http://www.siemens.com/siprotec

Description

The SIPROTEC 7SC80 feeder protection can be used for protection and automation of medium-voltage distribution feeders with grounded, low-resistance grounded, isolated, or compensated neutral.

The SIPROTEC 7SC80 features "flexible protection functions". 20 additional protection functions can be created by the user. For example, a rate of change of frequency function or a reverse power function can be created. The relay provides circuit-breaker control. Additional primary switching devices (grounding switches, transfer switches and isolating switches) can also be controlled from the relay. Automation or PLC logic functionality is also implemented in the device.

The integrated programmable logic (CFC) allows the user to add own functions, e.g. for the automation of switchgear (including: interlocking, transfer and load shedding schemes). The user is also allowed to generate user-defined messages.

The upgrade of device and communication firmware is also possible via Ethernet.

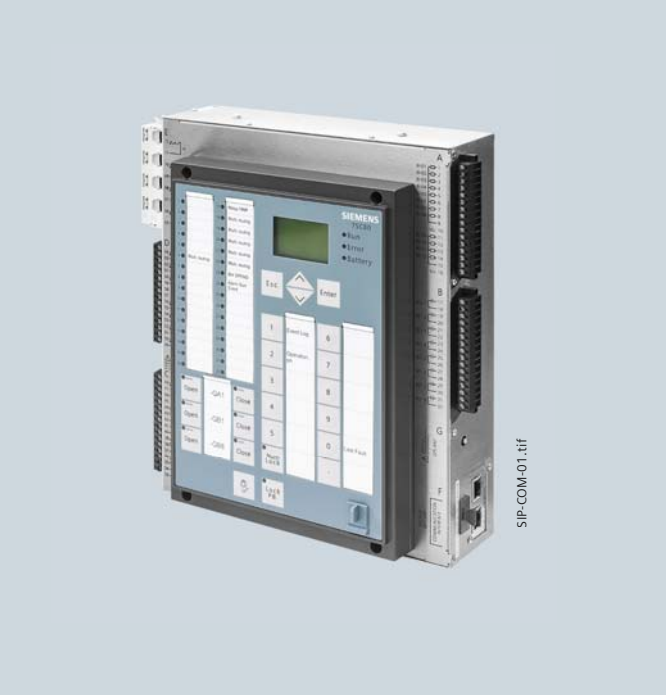

Fig. 9/1 SIPROTEC 7SC80 front view with HMI



Fig. 9/2 SIPROTEC 7SC80 side view with detached HMI

Highlights

- Support of feeder automation applications, e.g. fault isolation and service restauration
- Designed for harsh environment
- Extended temperature range –50 °C up to 85 °C
- Open for all different communication technologies, e.g. radio, which are used for feeder automation
- Integrated GPS module is available for time synchronisation
- Full remote access supported for firmware and parameter updates and upgrades
- A web based HMI provides complete remote control of the device
- 9 programmable function keys
- 6-line display
- Integrated switch for low-cost and redundant optical rings. Devices can be connected directly with each other at electrical modules
- Parallel running communication protocols
- Redundancy protocols RSTP, PRP and HSR for highest availability
- Current Jump detector
- Extended CFC capabilities
- 24 km Single mode interface
- RTU version without protection features
- Pluggable terminals
- Secondary current transformers values (1 A / 5 A9 settable using DIGSI
- Buffer battery exchangeable from the side
- USB front port
- Relay-to-relay communication through Ethernet with IEC 61850 GOOSE
- Stainless steel housing
- Millisecond-accurate time synchronization through Ethernet with SNTP
- Inputs for Low power CTs and VTs according IEC 61869-6 (formerly IEC 60044-7 and IEC 60044-8).

Feeder Protection SIPROTEC 7SC80

Function overview

Protection functions	IEC	ANSI No.
Definite and inverse time-overcurrent protection (phase/ground)	$I>$, I_p, I_{Np}	50, 50N; 51, 51N
Directional time-overcurrent protection phase	$I>$, $I>>$, $I>>>$, I_p	67
Directional time-overcurrent protection ground	$I_E>$, $I_E>>$, $I_E>>>$, I_{Ep}	67N
Directional sensitive ground fault protection	$I_{EE}>$, $I_{EE}>>$, I_{EEp}	67Ns, 50Ns
Overvoltage protection, zero-sequence system	V_E, $V_0>$	59N
High-impedance restricted ground-fault protection		87N
Inrush restraint		
Trip-ciruit supervision	TCS	74TC
Undercurrent monitoring	$I<$, P>	37
Overload protection	$\vartheta>$	49
Undervoltage/overvoltage protection	$V<$, $V>$	27/59
Overfrequency/underfrequency protection	$f<$, $f>$	81O/U
Circuit-breaker failure protection	CBFP	50BF
Voltage dependent inverse-time overcurrent protection		51V
Unbalanced-load protection	$I_2>$	46
Phase-sequence-voltage supervision	LA, LB, LC	47
Synchrocheck	Sync	25
Automatic reclosing	AR	79
Fault locator	FL	FL
Lockout		86
Forward power supervision, reverse power protection	$P<>$, $Q<>$	32
Power factor	cos φ	55
Rate-of-frequency-change protection	df/dt	81R
Rate-of-voltage-change protection	dV/dt	27R, 59R

Table 9/1 Function overview

Control functions / programmable logic

- Commands for the ctrl. of CB, disconnect switches (isolators/isolating switches)
- Control through keyboard, binary inputs, DIGSI 4 or SCADA system
- User-defined PLC logic with CFC (e.g. interlocking).

Monitoring functions

- Operational measured values *V, I, f*
- Energy metering values W_p, W_q
- Minimum and maximum values
- Circuit-breaker wear monitoring
- Fuse failure monitor
- 8 oscillographic fault records
- Trip circuit supervision.

Communication interfaces

- Ethernet electrical and optical (miltimode or singlemode)
- IEC 61850 Edition 1 and 2
- DNP3 TCP
- PROFINET
- IEC 60870-5-104
- Ethernet redundancy protocols RSTP, PRP and HSR
- USB front interface for DIGSI 4.

Hardware

- 4 current transformers
- 1/4 voltage transformers
- 12 binary inputs
- 8 binary outputs
- 1 life contact
- Pluggable current and voltage terminal blocks
- Connection option for low-power current and voltage transformers.

The feeder protection SIPROTEC 7SC80 is a numerical protection device that can perform control and monitoring functions and therefore provides the user with a cost-effective platform for power system management, that ensures reliable supply of electrical power to the customers.

Device operation was designed according to ergonomic aspects. Top priority was given to good display readability and large function keys. The 32 LEDs allow displaying numerous states and alarms.

Control

The integrated control function permits control of disconnect devices, grounding switches or circuit-breakers through the integrated operator panel, binary inputs, DIGSI 4 or the systems control (e.g. SICAM).

Programmable logic

The integrated logic characteristics (CFC) allow the user to add own functions for automation of switchgear (e.g. interlocking), switching sequence or of the distribution system. The user can also generate user-defined messages.

Operational measured values

Extensive measured values, metered values and limit values provide improved system management as well as commissioning.

Operational indication

Event logs, trip logs, fault records and statistics documents are stored in the relay to provide the user or operator with all the key data required to operate modern substations.

Line protection

The SIPROTEC 7SC80 units can also be used for line protection of medium-voltage distribution feeders with grounded, low-resistance grounded, isolated, or compensated neutral.

Transformer protection

The device provides all the functions for backup protection for transformer differential protection. The inrush suppression effectively prevents unwanted trips that can be caused by inrush currents. The high-impedance restricted ground-fault protection detects short-circuits and insulation faults on the transformer.

Backup protection

As a backup protection the SIPROTEC 7SJ80 devices are universally applicable.

Switchgear cubicles for high/medium voltage

All units are designed specifically to meet the requirements of high / medium-voltage applications. In general, no separate measuring instruments (e.g., for current, voltage, frequency, ...) or additional control components are necessary.

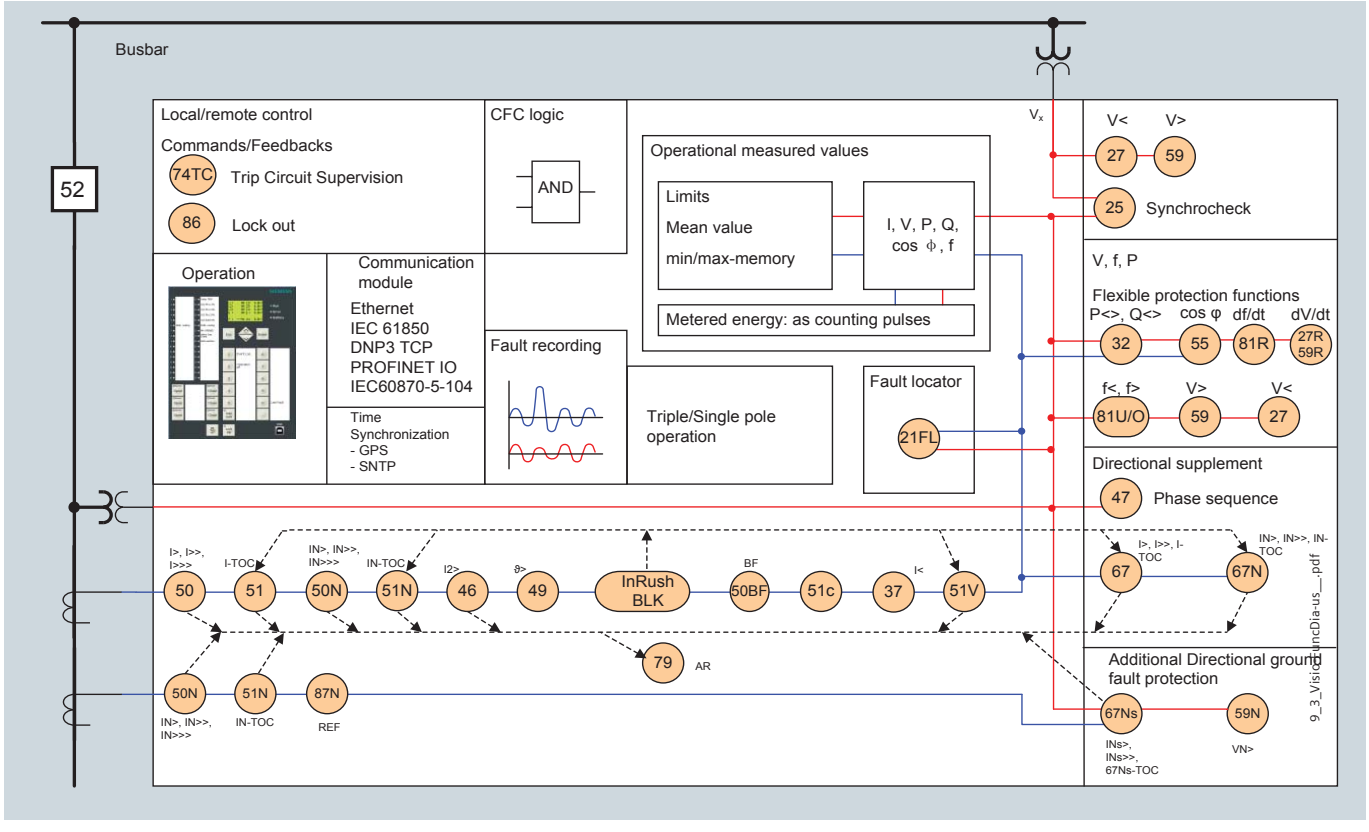

Fig. 9/3 Function diagram

Construction and hardware

Housing with many advantages

The SIPROTEC 7SC80 has a complete other form factor than all other SIPROTEC Compact devices. All interfaces are at the left and right hand side of the relay. A small print onto the enclosure next to the clamps describes each port in detail. All clamps are pluggable and therefore a pre-wiring and easy replacement in case of maintenance is possible. A short circuit is integrated in the pluggable CT clamp to avoid any risk of unclosed secondary CT circuits. The first eight binary inputs and the second four binary inputs have a common ground. The threshold is fixed for 24 V and higher. The secondary values of the CTs 1 A or 5 A can be set via DIGSI.

Operation panel/HMI

The relay features both a clip-on and a web-based operation panel/HMI (web monitor) with 32 LEDs and 9 programmable keys that can be used to configure shortcuts for menu operations or other applications (see Fig. 9/6).

The web monitor can be started just by entering the device IP address in an internet browser. All device monitoring and control functions are thus available in real-time through a communication link. The access rights can be restricted. If security requirements are more stringent, this function can also be disabled completely.

The second web monitor view provides a graphic display which represents control displays and also enables control operations. Additionally, the web monitor gives access to operational indications, protection indications, fault records, primary and secondary values.

You can print or save this data.

The operation panel/HMI is not mandatory for the correct functioning of the SIPROTEC 7SC80. It can be attached or detached during operation without any adverse effects. It is installed either directly on the SIPROTEC 7SC80 base device or connected detached using a 3 m cable.

SIPROTEC 7SC80 is suited for panel flush mounting or panel surface mounting.



Fig. 9/4 Process termial



Fig. 9/5 Current terminal

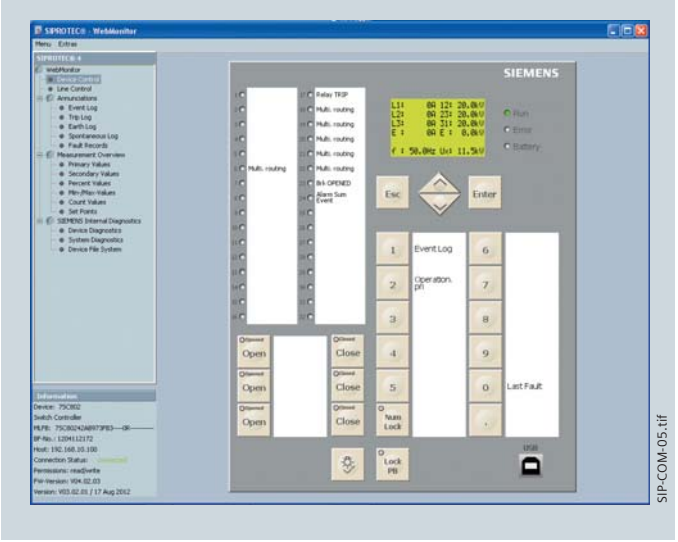

Fig. 9/6 WebMonitor

Current terminals – single cables	
Cable cross-sections	AWG 14-12 (2.6 mm^2 to 3.3 mm^2)
When using lugs	AWG 14-10 (2.6 mm^2 to 6.6 mm^2)
Permissible tightening torque	2.7 Nm
Stripping length (for solid conductor)	10 mm to 11 mm (0.39 in to 0.43 in) Only solid copper wires may be used.
Process terminal connections	
Cable cross-sections	AWG 18-12 (1.0 mm^2 to 2.5 mm^2)
Permissible voltages	300 V
Permissible currents	5 A Only solid copper wires may be used.
Permissible tightening torque	0.4 - 0.5 Nm
Stripping length	7 mm (0.28 in)

Table 9/2 Wiring specifications for process connection

The SIPROTEC 7SC80 variants are always equipped with at least one single voltage input Vx. This input can be used e.g. to detect line voltage of a single phase.

An optional internal GPS module can be ordered to provide high accuracy time synchronization to the device. The GPS coordinates of the device can e.g. be provided to a control center.

The SIPROTEC 7SC80 devices are always equipped with either an electrical or an optical Ethernet module. IEC 61850 is always available on the module and optionally together with one of the protocolls IEC 60870-5-104, PROFINET IO or DNP3 TCP.

The optical module can be equipped with single mode ports to bridge distances up to 24 km, the well known integrated ethernet switch functionality is of course included.

Low-power transformer terminals

The SIPROTEC 7SC80 is available in two hardware configurations, featuring 3 inputs for connecting low-power current transformers (if the ground current has to be measured separately, the input Vx can be used) and optionally 3 inputs for voltage transformers. Here, the low-power voltage transformers are connected to the standard voltage transformer inputs. The required measuring range is activated via parameter set. A secondary voltage corresponding to the primary value is required; differential sensors are not supported.

Low-power current transformers

You can generally connect all sensors to the low-power current transformer inputs that support the following SIPROTEC 7SC80 specifications:

Measuring range	20mV - 50V AC (measuring accuracy +/- 1mV at 25°C)
Input impedance	40 kOhms
Rated voltage	200mV - 20V at rated current
Thermal rating	200V for 10s
Cable	2-pole shielded, open cable end

This enables various rated operating current ranges depending on the sensors used. To prevent early saturation, the overcurrents to be expected must also be observed in the low-power transformers.

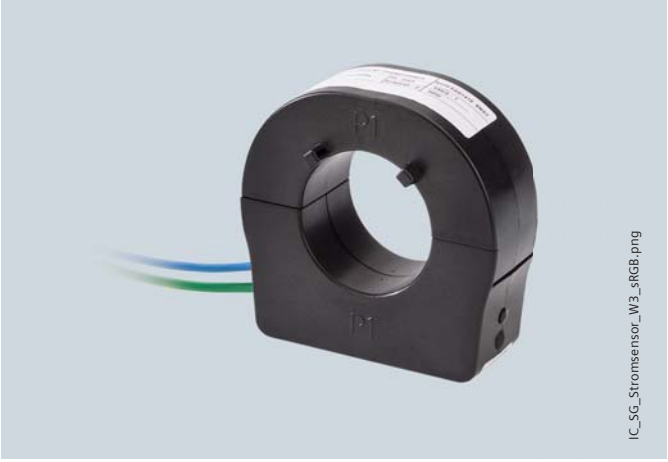

Fig. 9/7 Current transformer

Low-power voltage transformers

Resistive voltage dividers are provided as low-power voltage transformers. You can generally connect all sensors that support the following SIPROTEC 7SC80 specifications:

Measuring range	100mV - 250V AC (measuring accuracy +/- 1mV at 25°C)
Input impedance	1.2 MOhms (mismatches can be corrected in the 7SC80 parameters if necessary)
Rated voltage	200mV - 40V
Thermal rating	230V continuous
Cable	2-pole shielded, open cable end

This enables various rated operating voltage ranges depending on the sensors used.



Fig. 9/8 Voltage transformer

The following low-power transformers can be ordered directly via MLFB:

Typ	MLFB	Ratio	Description
Phase current sensor	6MD2320-0GA00-1AA0	300A/225mV	split core transformer for cable systems; internal diameter 52 mm; accuracy 1 %, 5P10; impedance > 20 kohms
Summation current	6MD2320-0AF00-1AA0	60A/225mV	sensor split core transformer for cable systems; internal diameter 110 mm; impedance > 20 kohms
Voltage senso 10kV	6MD2320-0AA04-1AA0	10kV/√3 -> 3.25/√3	for T-connector with C-taper; accuracy 99 %, rated burden 200 kohms
Voltage senso 20kV	6MD2320-0AA07-1AA0	20kV/√3 -> 3.25/√3	for T-connector with C-taper; accuracy 99 %, rated burden 200 kohms

Table 9/3 Available low-power transofrmers e.g. Zelisko

Protection functions

Battery monitor

The DC 24/48 V auxiliary voltage version allows monitoring an external 24 V or 48 V battery. The DC voltage is measured directly and provided as measured value. The battery is tested periodically. For this purpose, the external battery loader is deactivated temporarily, and after a short waiting time, an external load impedance is connected to the battery. The battery voltage before and after the test is measured. If the voltage difference is too great, a message can be generated. A number of other battery-related messages are available. The battery status is also indicated by a special battery LED.

Overcurrent protection (ANSI 50, 50N, 51, 51N, 51V)

This function is based on the phase-selective measurement of the three phase currents and the ground current (four transformers). Three definite time-overcurrent protection elements (DMT) are available both for the phase and the ground elements. The current threshold and the delay time can be set in a wide range. Inverse-time overcurrent protection characteristics (IDMTL) can also be selected and activated.

Reset characteristics

Time coordination with electromechanical relays are made easy with the inclusion of the reset characteristics according to ANSI C37.112 and IEC 60255-3 / BS 142 standards. When using the reset characteristic (disk emulation), the reset process is initiated after the fault current has disappeared. This reset process corresponds to the reverse movement of the Ferraris disk of an electromechanical relay (disk emulation).

Inrush restraint

The relay features second harmonic restraint. If second harmonic content is detected during the energization of a transformer, the pickup of stages (I>, I_p, $I>_{dir}$ and $I_{p\,dir}$ is blocked.

Dynamic setting change

The pickup thresholds and the trip times of the directional and non-directional time-overcurrent protection functions can be changed via binary inputs or by setable time control.

Static parameter switchover

Numerous protection-relevant parameters can be switched over statically, e.g. via binary contacts, protocol or internal logic. 8 parameter groups are available.

Directional comparison protection (cross-coupling)

It is used for selective instantaneous tripping of sections fed from two sources, i.e. without the disadvantage of time delays of the set characteristic. The directional comparison protection is suitable if the distances between the protection zones are not significant and pilot wires are available for signal transmission. In addition to the directional comparison protection, the directional coordinated time-overcurrent protection is used for complete selective backup protection.

Available inverse-time characteristics

Characteristics acc. to	IEC 60255-3	ANSI/IEEE
Normal invers	•	•
Short inverse		•
Long inveres	•	•
Moderately inverse		•
Very inverse	•	•
Extremely inverse	•	•

Table 9/4 Available inverse-time characteristics

Moreover there are further recloser inverse-time characteristic curves available.

Directional time-overcurrent protection (ANSI 67, 67N)

Directional phase and ground protection are separate functions. They operate in parallel to the non-directional overcurrent elements. Their pickup values and delay times can be set separately. Definite-time and inverse-time characteristics are offered.

The tripping characteristic can be rotated by ± 180 degrees. By making use of the voltage memory, the directionality can be determined reliably even for close-in (local) faults. If the primary switching device closes onto a fault and the voltage is too low to determine direction, the direction is determined using voltage from the memorized voltage. If no voltages are stored in the memory, tripping will be according to the set characteristic.

For ground protection, users can choose whether the direction is to be calculated using the zero-sequence or negative-sequence system quantities (selectable). If the zero-sequence voltage tends to be very low due to the zero-sequence impedance it will be better to use the negative-sequence quantities.

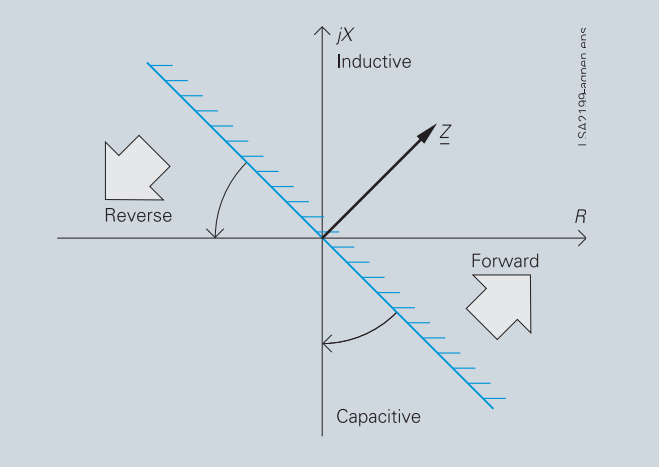

Fig. 9/9 Directional characteristics of the directional time-overcurrent protection

(Sensitive) directional ground-fault detection (ANSI 59N/64, 67Ns, 67N)

For isolated-neutral and compensated networks, the direction of power flow in the zero sequence is calculated from the zero-sequence current I_0 and zero-sequence voltage V_0. For networks with an isolated neutral, the reactive current component is evaluated; for compensated networks, the active current component or residual resistive current is evaluated.

For special network conditions, e.g. high-resistance grounded networks with ohmic-capacitive ground-fault current or lowresistance grounded networks with ohmic-inductive current, the tripping characteristics can be rotated approximately ± 45 degrees (see Fig.9/10).

Two modes of ground-fault direction detection can be implemented: tripping or "signalling only mode".

It has the following functions:

- TRIP via the displacement voltage V_E
- Two instantaneous elements or one instantaneous plus one user-defined characteristic
- Each element can be set to forward, reverse or non-directional
- The function can also be operated in the insensitive mode as an additional short-circuit protection.

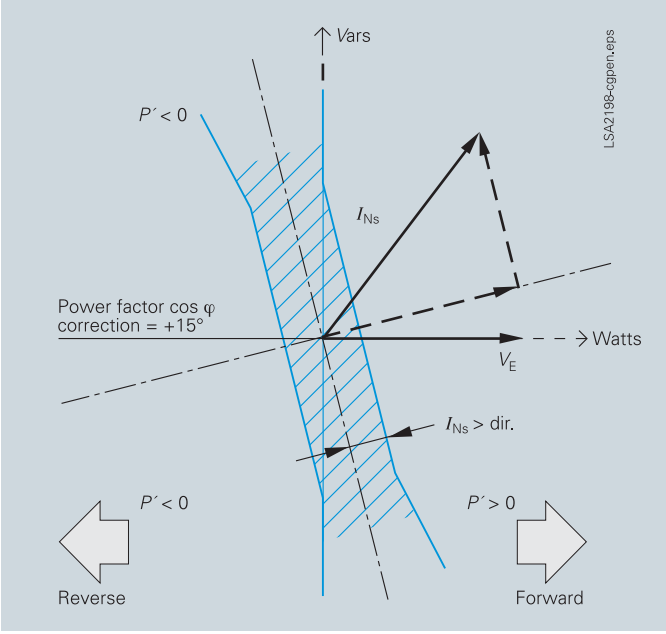

Fig. 9/10 Directional determination using cosine measurements for compensated networks

Phase-balance current protection (ANSI 46) (Negative-sequence protection)

By measuring current on the high side of the transformer, the two-element phase-balance current/negative-sequence protection detects high-resistance phase-to-phase faults and phase-to-ground faults on the low side of a transformer. This function provides backup protection for high-resistance faults through the transformer.

(Sensitive) ground-fault detection (ANSI 50Ns, 51Ns / 50N, 51N)

For high-resistance grounded networks, a sensitive input transformer is connected to a phase-balance neutral current transformer (also called core-balance CT). The function can also be operated in the normal mode as an additional short-circuit protection for neutral or residual ground protection.

Breaker failure protection (ANSI 50BF)

If a faulted portion of the electrical circuit is not disconnected when a trip command is issued to a circuit-breaker, another trip command can be initiated using the breaker failure protection which trips the circuit-breaker of an upstream feeder. Breaker failure is detected if, after a trip command is issued the current keeps on flowing into the faulted circuit. It is also possible to make use of the circuit-breaker position contacts for indication as opposed to the current flowing through the circuit-breaker.

High-impedance restricted ground-fault protection (ANSI 87N)

The high-impedance measurement principle is a simple and sensitive method to detect ground faults, especially on transformers. It can also be used on motors, generators and reactors when they are operated on a grounded network.

When applying the high-impedance measurement principle, all current transformers in the protected area are connected in parallel and operated through one common resistor of relatively high *R*. The voltage is measured across this resistor (see Fig. 9/11).

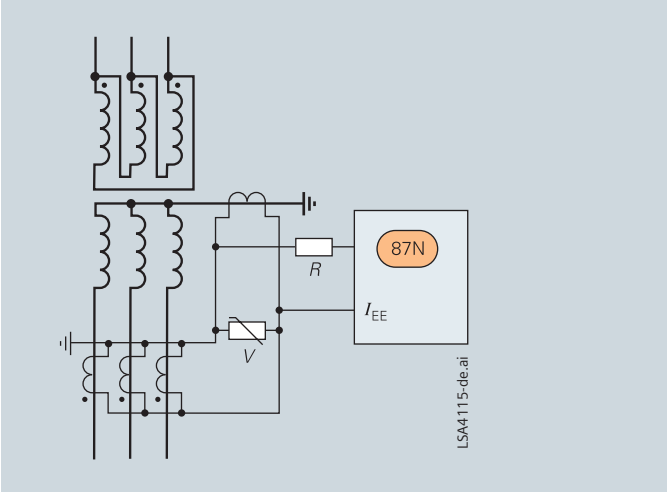

Fig. 9/11 High-impedance restricted ground-fault protection

The voltage is measured by detecting the current through the (external) resistor *R* at the sensitive current measurement input I_{EE}. The varistor *V* serves to limit the voltage in the event of an internal fault.

It limits the high instantaneous voltage spikes that can occur at current transformer saturation. At the same time, this results to smooth the voltage without any noteworthy reduction of the average value.

If no faults have occurred and in the event of external or through faults, the system is at equilibrium, and the voltage through the resistor is approximately zero. In the event of internal faults, an imbalance occurs which leads to a voltage and a current flowing through the resistor *R*.

The same type of current transformers must be used and must at least offer a separate core for the high-impedance restricted ground-fault protection. They must have the same transformation ratio and approximately an identical knee-point voltage. They should also have only minimal measuring errors.

Auto-reclosure (ANSI 79)

Multiple re-close cycles can be set by the user and lockout will occur if a fault is present after the last re-close cycle. The following functions are available:

- 1/3-pole ARC for all types of faults
- Separate settings for phase and ground faults
- Multiple ARC, one rapid auto-reclosure (RAR) and up to nine delayed auto-reclosures (DAR)
- Initiation of the ARC is dependant on the trip command selected (e.g. $I_2>$, $I>>$, I_p, $I_{dir}>$)
- The ARC function can be blocked by activating a binary input
- The ARC can be initiated from external or by the PLC logic (CFC)
- The directional and non-directional elements can either be blocked or operated non-delayed depending on the auto-reclosure cycle
- If the ARC is not ready it is possible to perform a dynamic setting change of the directional and non-directional overcurrent elements.

Flexible protection functions

SIPROTEC 7SC80 devices enables the user to easily add up to 20 additional protection functions. Parameter definitions are used to link standard protection logic with any chosen characteristic quantity (measured or calculated quantity). The standard logic consists of the usual protection elements such as the pickup set point, the set delay time, the TRIP command, a block function, etc. The mode of operation for current, voltage, power and power factor quantities can be three-phase or single-phase. Almost all quantities can be operated with ascending or descending pickup stages (e.g. under and over voltage). All stages operate with protection priority.

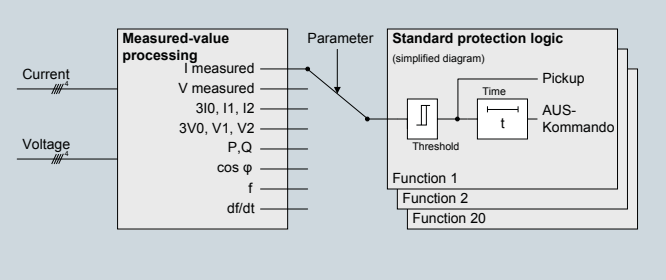

Fig. 9/12 Flexible protection functions

Protection functions/stages available are based on the available measured analog quantities:

Function	ANSI
$I>$, $I_E>$	50, 50N
$V<$, $V>$, $V_E>$	27, 59, 59N
$3I_0>$, $I_1>$, $I_2>$, $I_2/I_1>$, $3V_0>$, $V_1><$, $V_2><$	50N, 46, 59N, 47
$P><$, $Q><$	32
cos φ	55
$f><$	81O, 81U
$df/dt><$	81R
$dI/dt><$	current jump function

Table 9/5 Available flexible protection functions

For example, the following can be implemented:

- Reverse power protection (ANSI 32R)
- Rate-of-frequency-change protection (ANSI 81R)
- Rate-of-voltage-change protection (ANSI 27R/59R)
- Simplified differential protection via IEC 61850 GOOSE communication.

Synchrocheck, synchronizing function (ANSI 25)

When closing a circuit-breaker, the units can check whether two separate networks are synchronized. Voltage-, frequency- and phase-angle-differences are checked to determine whether synchronous conditions exist.

Trip circuit supervision (ANSI 74TC)

One or two binary inputs can be used for monitoring the circuit-breaker trip coil including its incoming cables. An alarm signal is generated whenever the circuit is interrupted.

Lockout (ANSI 86)

All binary output statuses can be memorized. The LED reset key is used to reset the lockout state. The lockout state is also stored in the event of supply voltage failure. Reclosure can only occur after the lockout state is reset.

Thermal overload protection (ANSI 49)

To protect cables and transformers, an overload protection function with an integrated warning/alarm element for temperature and current can be used. The temperature is calculated using a thermal homogeneous body model (per IEC 60255-8), it considers the energy entering the equipment and the energy losses. The calculated temperature is constantly adjusted according to the calculated losses. The function considers loading history and fluctuations in load.

Settable dropout delay times

If the relays are used in conjunction with electromechanical relays, in networks with intermittent faults, the long dropout times of the electromechanical relay (several hundred milliseconds) can lead to problems in terms of time coordination/grading. Proper time coordination/grading is only possible if the dropout or reset time is approximately the same. This is why the parameter for dropout or reset times can be defined for certain functions such as overcurrent protection, ground short-circuit and phase-balance current protection.

Undercurrent monitoring (ANSI 37)

A sudden drop in current, which can occur due to a reduced load, is detected with this function. This may be due to shaft that breaks, no-load operation of pumps or fan failure.

Overvoltage protection (ANSI 59)

The two-element overvoltage protection (possible per phase)detects unwanted network and machine overvoltage conditions. The function can operate either with phase-to-phase, phase-to-ground, positive phase-sequence or negative phase-sequence voltage.

Undervoltage protection (ANSI 27)

The two-element undervoltage protection provides protection against dangerous voltage drops (especially for electric machines). Applications include the isolation of generators or motors from the network to avoid undesired operating conditions and a possible loss of stability. Proper operating conditions of electrical machines are best evaluated with the positive-sequence quantities. The protection function is active over a wide frequency range (45 to 55, 55 to 65 Hz). Even when falling below this frequency range the function continues to work, however, with decreased accuracy. The function can operate either with phase-to-phase, phase-to-ground or positive phase-sequence voltage, and can be monitored with a current criterion. Three-phase and single-phase connections are possible.

1-pole operation

1-pole operation is optionally possible; switching objects can be opened and closed for each phase. Furthermore, 1-pole tripping on a fault and automatic reclosing is possible for each phase.

Frequency protection (ANSI 81O/U)

Frequency protection can be used for overfrequency and underfrequency protection. Electric machines and parts of the system are protected from unwanted frequency deviations. Unwanted frequency changes in the network can be detected and the load can be removed at a specified frequency setting. Frequency protection can be used over a wide frequency range (40 to 60 (for 50 Hz), 50 to 70 (for 60 Hz)). There are four elements (individually set as overfrequency, underfrequency or OFF) and each element can be delayed separately. Blocking of the frequency protection can be performed by activating a binary input or by using an undervoltage element.

Fault locator (ANSI FL)

The integrated fault locator calculates the fault impedance and the distance to fault. The results are displayed in Ω, kilometers (miles) and in percent of the line length.

Customized functions (ANSI 32, 51V, 55 etc.)

Additional functions, which are not time critical, can be implemented using the CFC measured values. Typical functions include reverse power, voltage controlled overcurrent, phase angle detection, and zero-sequence voltage detection.

Further functions

Measured values

The r.m.s. values are calculated from the acquired current and voltage along with the power factor, frequency, active and reactive power. The following functions are available for measured value processing:

- Currents I_{L1}, I_{L2}, I_{L3}, I_N, I_{EE}
- Voltages U_{L1}, U_{L2}, U_{L3}, U_{12}, U_{23}, U_{31}
- Symmetrical components I_1, I_2, $3I_0$; U_1, U_2, $3U_0$
- Power Watts, Vars, VA/P, *Q*, *S* (*P*, *Q*: total and phase selective)
- Power factor (cos φ), (total and phase selective)
- Frequency
- Energy ± kWh, ± kVarh, forward and reverse power flow
- Mean as well as minimum and maximum current and voltage values
- Operating hours counter
- Mean operating temperature of the overload function
- DC voltage measurement of an external battery
- Measurement of the internal device temperature
- Limit value monitoring
  Limit values can be monitored using programmable logic in the CFC. Commands can be derived from this limit value indication
- Zero suppression
  In a certain range of very low measured values, the value is set to zero to suppress interference.

Metered values

For internal metering, the unit can calculate an energy metered value from the measured current and voltage values. If an external meter with a metering pulse output is available, the 7SC80 can obtain and process metering pulses through an indication input. The metered values can be displayed and passed on to a control center as an accumulated value with reset. A distinction is made between forward, reverse, active and reactive energy.

Binary I/O extension with SICAM I/O-Unit 7XV5673

To extend binary inputs and binary outputs for SIPROTEC 7SC80 up to two SICAM I/O-Units 7XV5673 can be added. Each SICAM I/O-Unit 7XV7653 is equipped with 6 binary inputs and 6 binary outputs and an Ethernet switch for cascading. The connection to the protection device can be either through the DIGSI Ethernet service interface Port A or through IEC 61850 GOOSE on Port B (System interface with EN100 module).

Circuit-breaker wear monitoring/ circuit-breaker remaining service life

Methods for determining circuit-breaker contact wear or the remaining service life of a circuit-breaker (CB) allow CB maintenance intervals to be aligned to their actual degree of wear. The benefit lies in reduced maintenance costs.

There is no exact mathematical method to calculate the wear or the remaining service life of a circuit-breaker that takes arc-chamber's physical conditions into account when the CB opens.

This is why various methods of determining CB wear have evolved which reflect the different operator philosophies. To do justice to these, the relay offers several methods:

- ΣI
- ΣI^x, with x = 1..3
- Σi^2t.

The devices also offer a new method for determining the remaining service life:

- Two-point method

The CB manufacturers double-logarithmic switching cycle diagram (see Fig. 9/13) and the breaking current at the time of contact opening serve as the basis for this method. After CB opening, the two-point method calculates the remaining number of possible switching cycles. Two points P1 and P2 only have to be set on the device. These are specified in the CB's technical data.

All of these methods are phase-selective and a limit value can be set in order to obtain an alarm if the actual value falls below or exceeds the limit value during determination of the remaining service life.

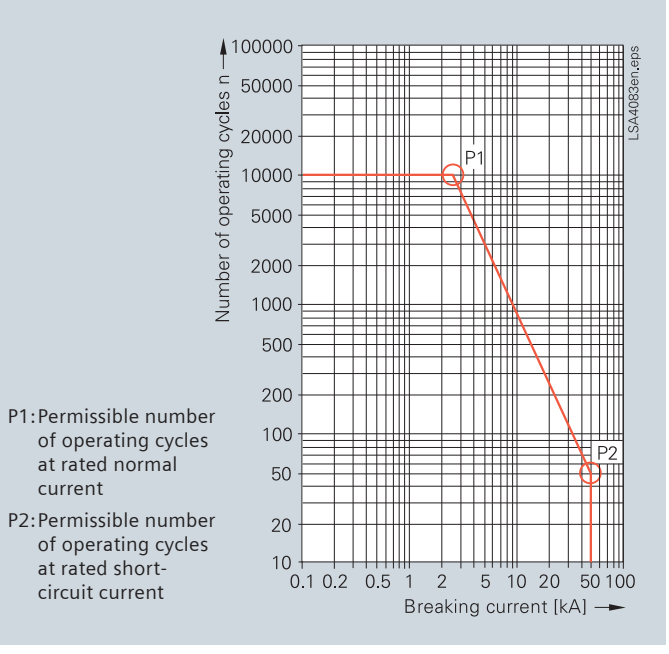

Fig. 9/13 Permissible number of operating cycles as a function of breaking current

Commissioning

Commissioning could not be easier and is supported by DIGSI 4. The status of the binary inputs can be read individually and the state of the binary outputs can be set individually. The operation of switching elements (circuit-breakers, disconnect devices) can be checked using the switching functions of the relay. The analog measured values are represented as wide-ranging operational measured values. To prevent transmission of information to the control center during maintenance, the communications can be disabled to prevent unnecessary data from being transmitted. During commissioning, all indications with test tag for test purposes can be connected to a control and protection system.

Test operation

During commissioning, all indications can be passed to a control system for test purposes.

Application examples

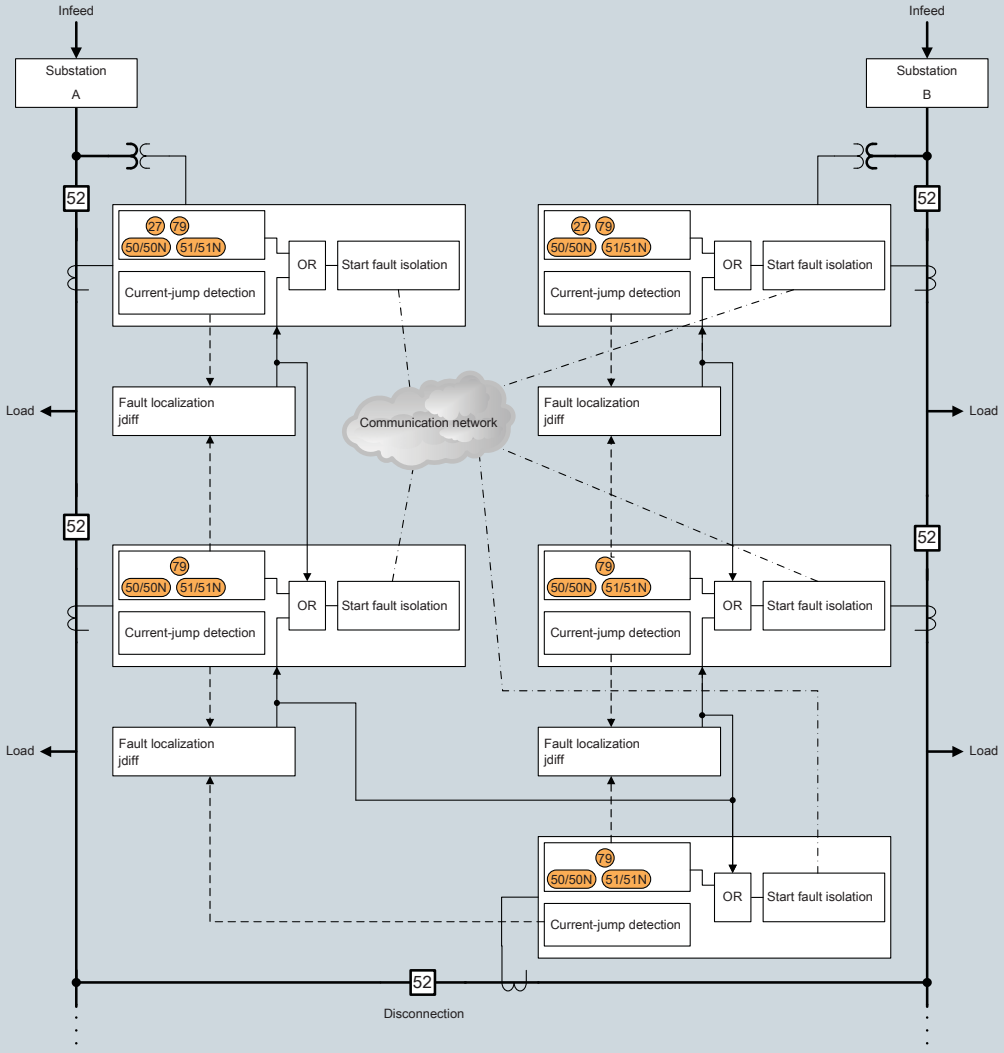

Fig. 9/14 Ring system application with SIPROTEC 7SC80

Radial systems

General hints:
The relay at the far end (D) from the infeed has the shortest tripping time. Relays further upstream have to be time-graded against downstream relays in steps of about 0.3 s.

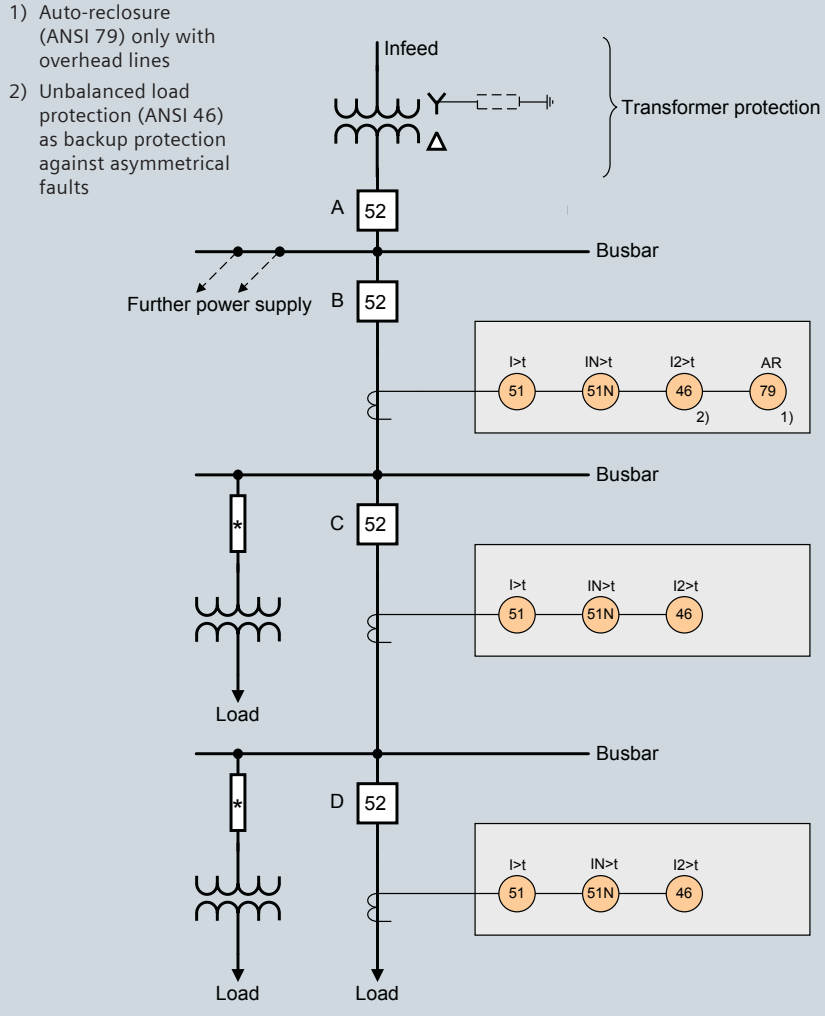

Fig. 9/15 Protection concept with overcurrent protection

Application examples

Earth-fault detection in isolated or compensated systems

In isolated or compensated systems, an occurred earth fault can be easily found by means of sensitive directional earth-fault detection.

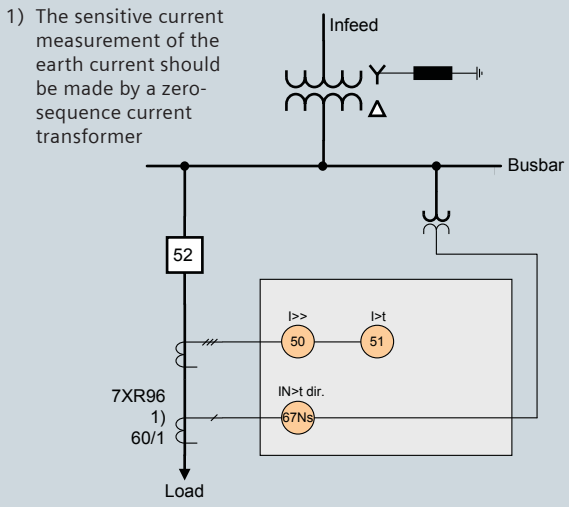

Fig. 9/16 Protection concept for directional earth-fault detection

Ring-main cable

With the directional comparison protection, 100 % of the line can be protected via instantaneous tripping in case of infeed from two sources (ring-main cable).

For lines with infeed from two sources, no selectivity can be achieved with a simple definite time-overcurrent protection. Therefore, the directional definite time-overcurrent protection must be used. A non-directional definite time-overcurrent protection is enough only in the corresponding busbar feeders. The grading is done from the other end respectively.

Advantage: 100% protection of the line via instantaneous tripping, and easy setting.

Disadvantage: Tripping times increase towards the infeed.

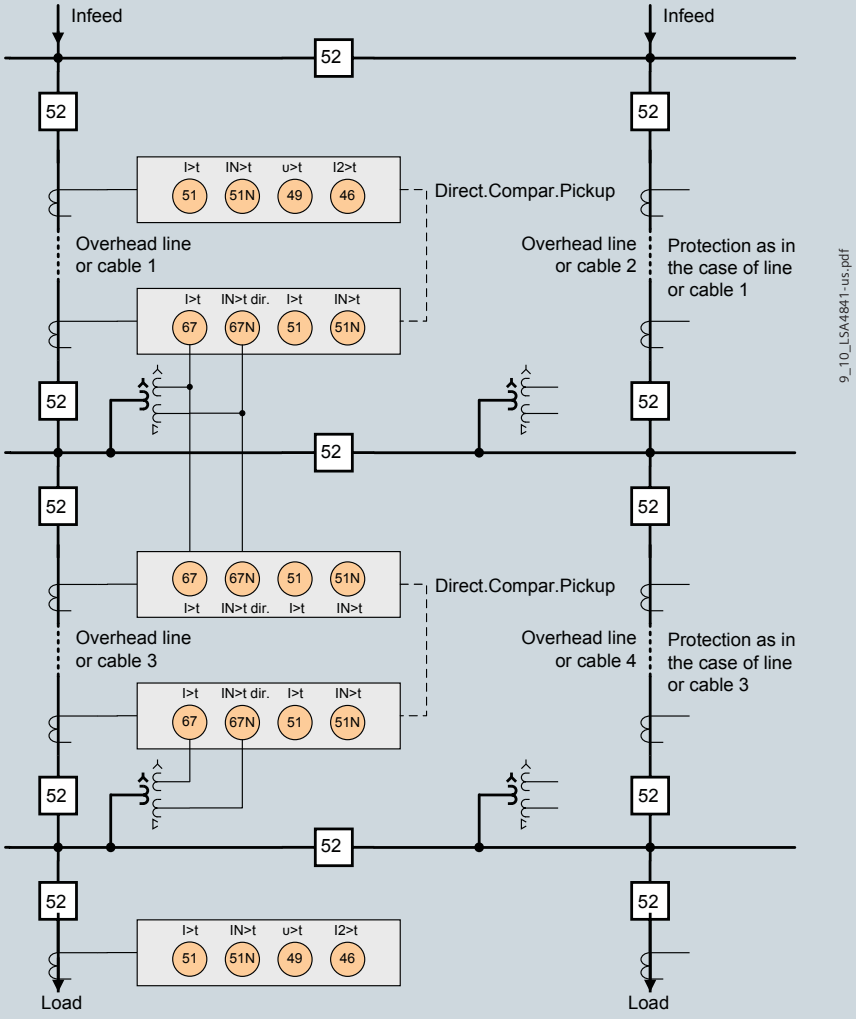

Fig. 9/17 Protection concept of ring power systems

Busbar protection by overcurrent relays with reverse interlocking

Applicable to distribution busbars without substantial (< 0.25 x I_N) backfeed from the outgoing feeders.

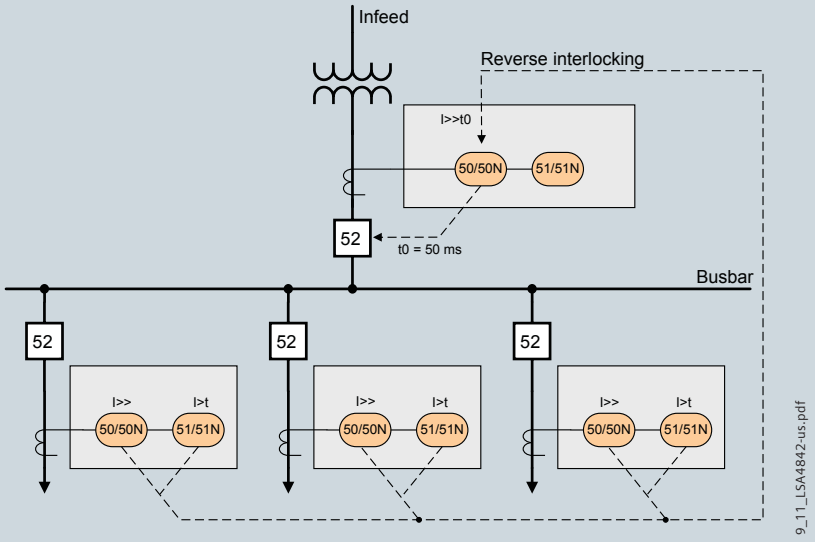

Fig. 9/18 Busbar protection via overcurrent relays with reverse interlocking

Line feeder with load shedding

In unstable power systems (e.g. solitary systems, emergency power supply in hospitals), it may be necessary to isolate selected consumers from the power system in order to protect the overall system.

The overcurrent protection functions are effective only in the case of a short-circuit.

Overloading of the generator can be measured as a frequency or voltage drop.

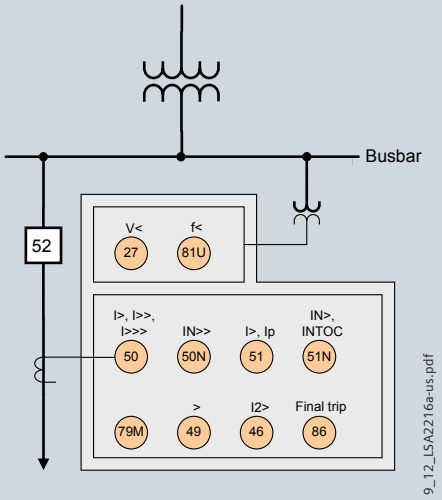

Fig. 9/19 Line feeder with load shedding

Application examples

Automatic reclosing

The Automatic reclosing function (AR) has starting and blocking options. In the opposite example, the application of the blocking of the high-current stages is represented according to the reclosing cycles. The overcurrent protection is graded (stages I, I_p) according to the grading plan. If an Automatic reclosing function is installed in the incoming supply of a feeder, first of all the complete feeder is tripped instantaneously in case of fault. Arc faults will be extinguished independently of the fault location. Other protection relays or fuses do not trip (fuse saving scheme). After successful Automatic reclosing, all consumers are supplied with energy again. If there is a permanent fault, further reclosing cycles will be performed. Depending on the setting of the AR, the instantaneous tripping stage in the infeed is blocked in the first, second or third cycle, i.e., now the grading is effective according to the grading plan. Depending on the fault location, overcurrent relays with faster grading, fuses, or the relay in the infeed will trip. Only the part of the feeder with the permanent fault will be shut down definitively.

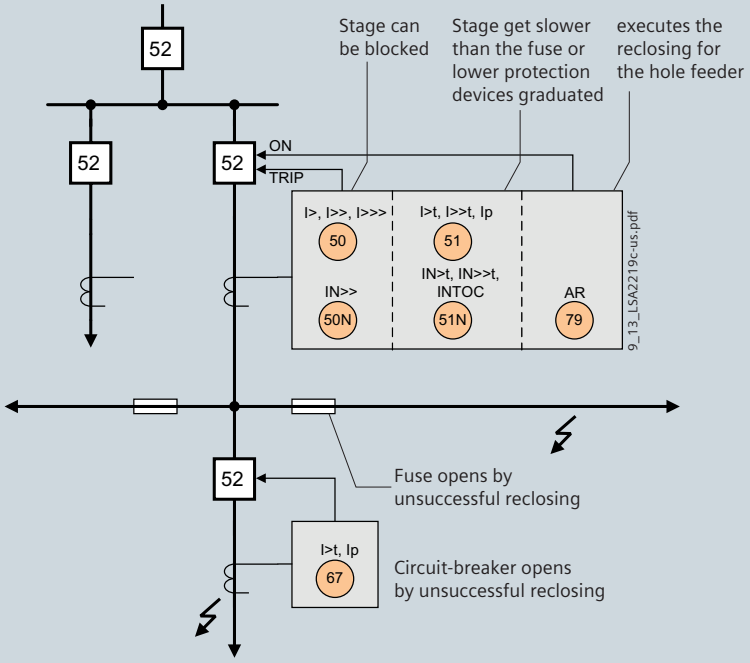

Fig. 9/20 Auto-reclosure

Reverse power protection with parallel infeeds

If a busbar is supplied by two parallel infeeds and there is a fault in one of the infeeds, the affected busbar shall be selectively shut down, so that supply to the busbar is still possible through the remaining infeed. To do this, directional devices are required, which detect a short circuit from the busbar towards the infeed. In this context, the directional time-overcurrent protection is normally adjusted over the load current. Low-current faults cannot be shut down by this protection. The reverse power protection can be adjusted far below rated power, and is thus also able to detect reverse power in case of low-current faults far below the load current. The reverse power protection is implemented through the "flexible protection functions".

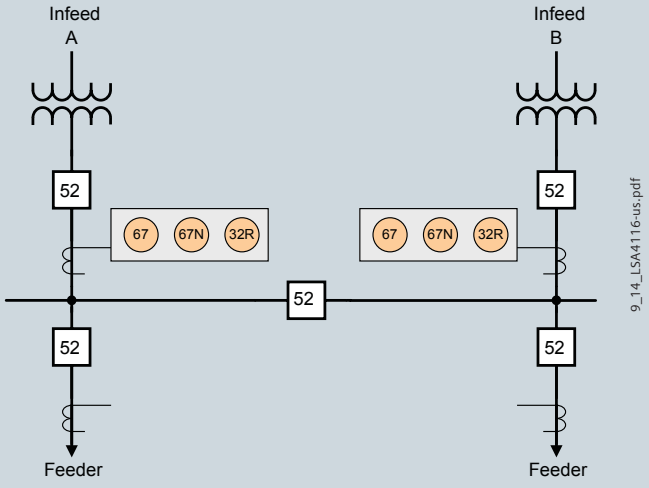

Fig. 9/21 Reverse power protection with parallel infeeds

Synchrocheck

Where two system sections are interconnected, the synchrocheck determines whether the connection is permissible without danger to the stability of the power system. In the example, load is supplied from a generator to a busbar through a transformer. The vector group of the transformer can be considered by means of a programmable angle adjustment, so that no external adjustment elements are necessary. Synchrocheck can be used for auto-reclosure, as well as for control functions (local or remote).

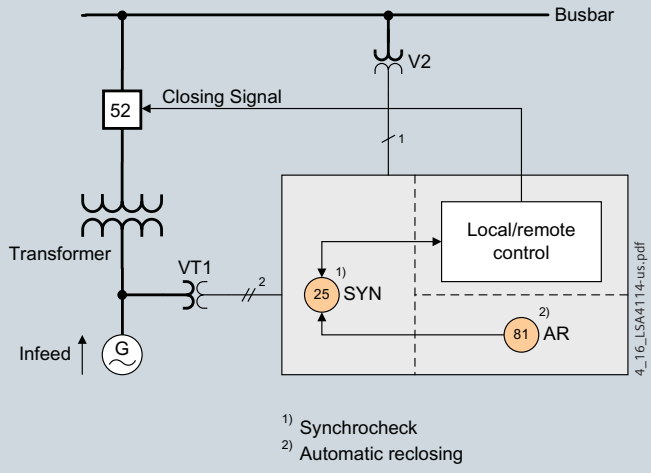

Fig. 9/22 Measurement of busbar and feeder voltage for synchronization

Protection of a transformer

The high-current stage enables a current grading, the overcurrent stages work as backup protection to subordinate protection devices, and the overload function protects the transformer from thermal overload. Low-current, single-phase faults on the low-voltage side, which are reproduced in the opposite system on the high-voltage side, can be detected with the unbalanced load protection. The available inrush blocking prevents pickup caused by the inrush currents of the transformer.

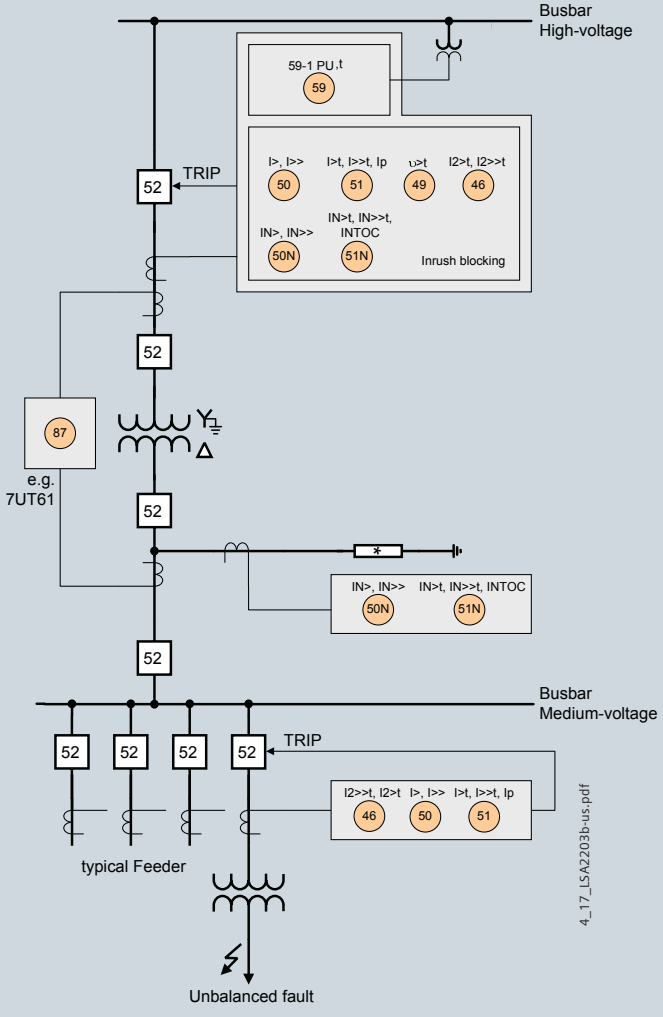

Fig. 9/23 Typical protection concept for a transformer

Feeder Protection SIPROTEC 7SC80

Selection and ordering data

Description	Order No.	Short code
	1 2 3 4 5 6 7 8 9 10 11 12 13 14 15 16	17 18 19
	7SC80 □ □ - □ □ □ □ □ □ - 3 □ □ □ -	□ □ □
Feeder Protection SIPROTEC 7SC80		
Housing, binary inputs and outputs		
Housing, 12 BI, 8 BO, 1 life contact	2	
Specification of CT and VT measurement inputs		
3 x I LPS/LoPo, 1 x V [4]	1	
4 x I 1 A/5 A, 1 x V	2	
3 x I LPS/LoPo, 4 x V [4]	3	
4 x I 1 A/5 A, 4 x V	4	
3 x I 1A/5A, 1 x Iee (sensitive) = 0,001 to 1,6A/0,005 to 8A, 1 x V	5	
3 x I 1A/5A, 1 x Iee (sensitive) = 0,001 to 1,6A/0,005 to 8A, 4 x V	6	
Rated auxiliary voltage		
DC 60 V to 250 V; AV 115 V; AV 230 V	1	
DC 24 V / 48 V	2	
DC 24 V/48 V, Battery Monitoring [3]	3	
Unit version		
Surface mounting housing [5]	A	
Surface / Flush mounting housing with HMI	B	
Surface mounting housing with detached HMI	C	
Region-specific default and language settings [2]	A	
Region DE, IEC, language German	B	
Region World, IEC / ANSI, language English	C	
Region US, ANSI, language US-English	E	
Region World, IEC / ANSI, language Spanish	C	
Region World, IEC/ ANSI, language Russian	E	
System interface		L □ □
100 Mbit Ethernet, electrical, RJ45 connector	9	R
100 Mbit Ethernet, with integrated switch, optical, 2 x LC connector multimode	9	S
100 Mbit Ethernet, with integrated switch, optical, 2 x LC connector singlemode 24 km	9	T
Protocol for system interface		
IEC 61850		0
IEC 61850 + DNP3 TCP		2
IEC 61850 + PROFINET [1]		3
IEC 61850 + IEC 60870-5-104		4
Additional interfaces		
No module	0	
GPS module	7	
Functionality		
MLFB - number 13, 14, 15, 16 for optional features	see next page	

1) only with 100 Mbit Ethernet electrical and multimode
2) language selectable
3) in preparation
4) The mentioned sensors of SICAM FCM can be used. For protection related purpose the usability of the sensors have to be checked
5) HMI can be ordered separately: without cable: C53207 - A406 - D242 - 1 / with cable: C53207 - A406 - D243 - 1

You will find a detailed overview of the technical data (extract of the manual) under: http://www.siemens.com/siprotec

ANSI No.	Description	Order No.	Short code
		1 2 3 4 5 6 7 8 9 10 11 12 13 14 15 16 17 18 19	
		7SC80□□-□□□□□-3□□□-□□□	
Software packages	**Base Package A**		F A
50/51	Time-overcurrent protection phase: $I>$, $I>>$, $I>>>$, Ip		
50N/51N	Time-overcurrent protection ground $I_E>$, $I_E>>$, $I_E>>>$, I_{EP}		
50N(s)/51N(s)	Sensitive ground fault protection $I_{EE}>$, $I_{EE}>>$, I_{EEp} [4]		
50BF	Circuit-breaker failure protection		
46	Negative sequence / unbalanced load protection		
49	Thermal Overload protection		
87N	High impedance REF [3]		
74TC	Trip circuit supervision		
37	Undercurrent		
51c	Cold load pickup		
86	Lockout		
60CTS	CT supervision		
	Parameter changeover		
	Monitoring functions		
	Control of circuit breaker		
	Flexible protection functions (current parameters)		
	Under- / overfrequency		
	Inrush restraint		
	Fault recording, average values, min/max values		
	Base Package B (containing A) [1]		F B
67	Directional overcurrent protection phase $I>$, $I>>$		
67N	Directional overcurrent protection ground $I_E>$, $I_E>>$		
67Ns	Directional sensitive ground fault protection $I_{EE}>$, $I_{EE}>>$, I_{EEp} [4]		
27/59	Under- / overvoltage		
81U/O	Under- / overfrequency $f<$,$f>$		
25	Sync-check		
47	Phase rotation		
64/59N	Displacement voltage		
60VTS	VT supervision		
32/55/81R	Flexible protection functions (current and voltage parameters)		
	Protective function for voltage, power, power factor, frequency change		
	Base Package N (containing R) [2] [5]		F N
	NTP-server functionality, no protection		
	Base Package R [2]		F R
	pure RTU functionality, no protection		
	Additional functions		
	Without		0
79	With autoreclose		1
FL	With fault locator [1]		2
79/FL	With autoreclose and fault locator		3
79/TS	With single/triple pole autoreclose [1]		4
79/TS/FL	With single/triple pole autoreclose and fault locator [1]		5

1) Only with position 7 = **3**, **4** or **6**
2) Only with position 16 = **0**
3) 87N (REF) only with sensitive ground current input (position 7 = **5** oder **6**)
4) Depending On the ground current Input the function will be either sensitive (I_{EE}) or Non-sensitive (I_E)
5) Only with position 12 = **7**

You will find a detailed overview of the technical data (extract of the manual) under: http://www.siemens.com/siprotec

Connection diagrams

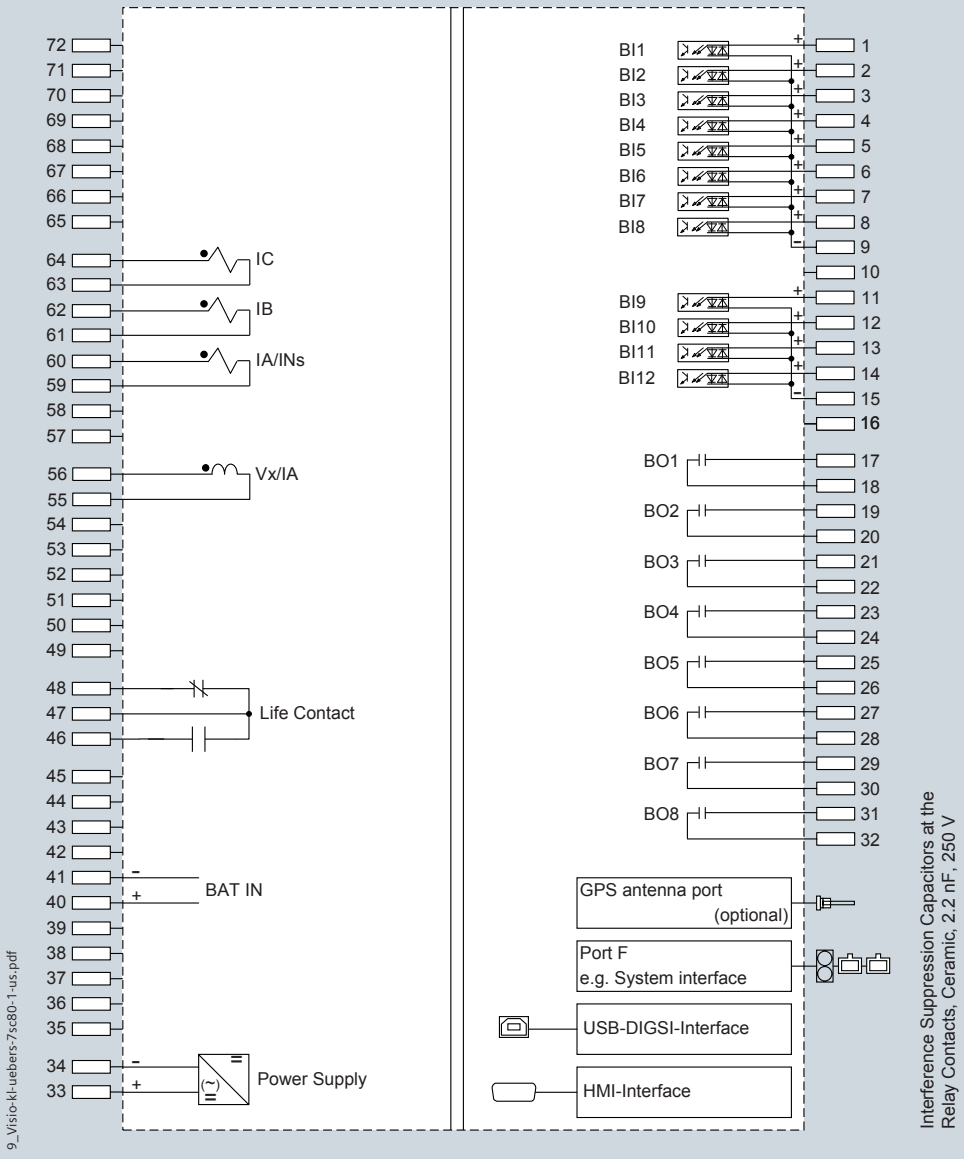

Fig. 9/24 Connection diagram SIPROTEC 7SC8021

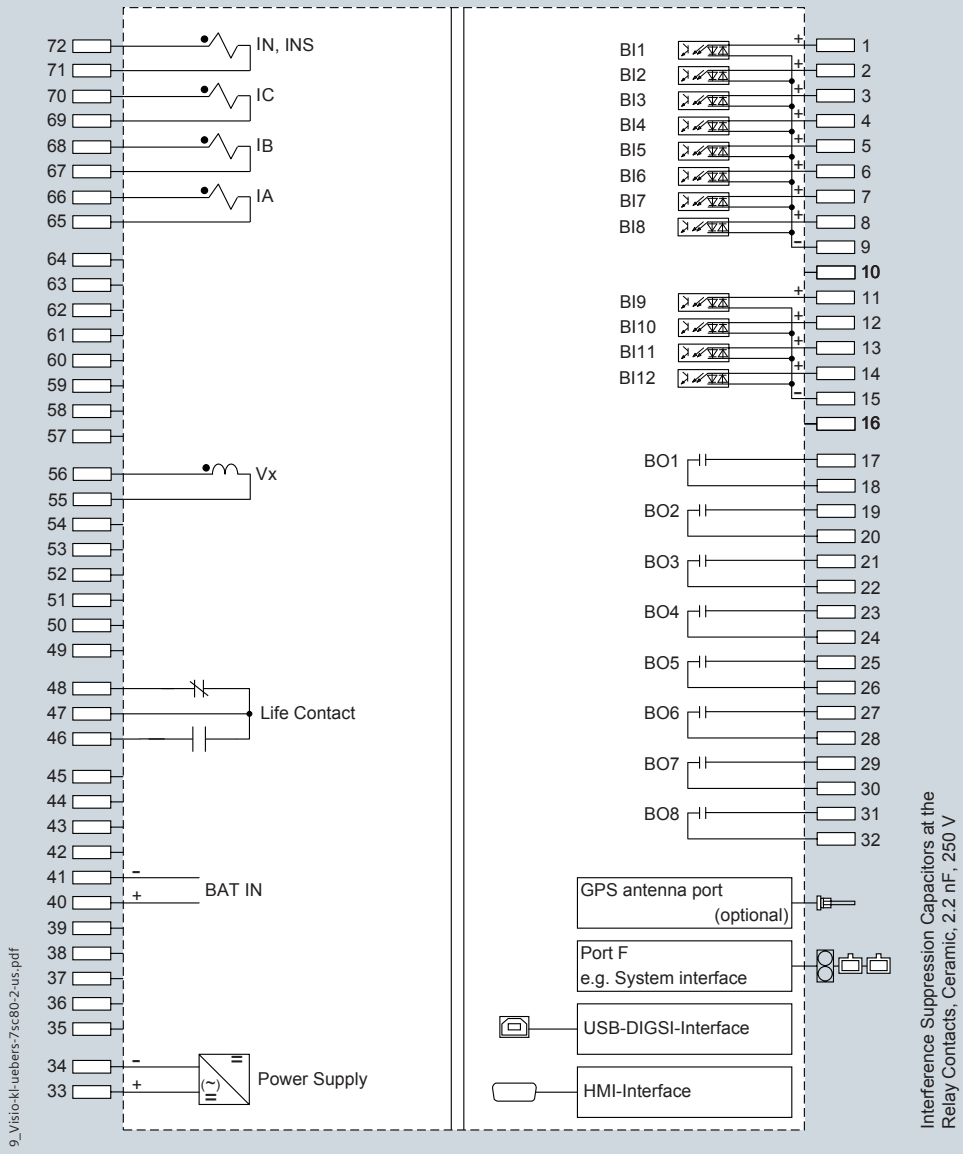

Fig. 9/25 Connection diagram SIPROTEC 7SC8022 and SIPROTEC 7SC8025

Connection diagrams

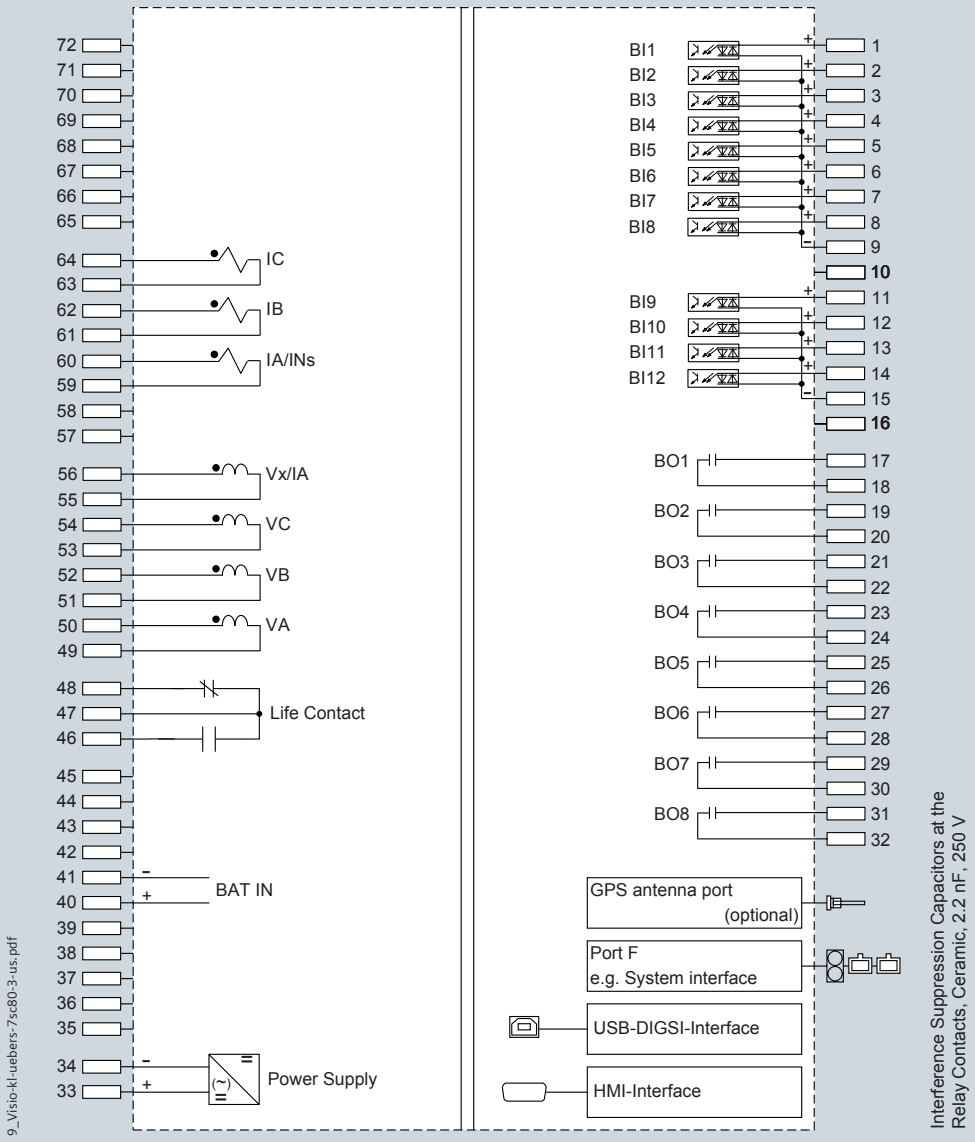

Fig. 9/26 Connection diagram SIPROTEC 7SC8023

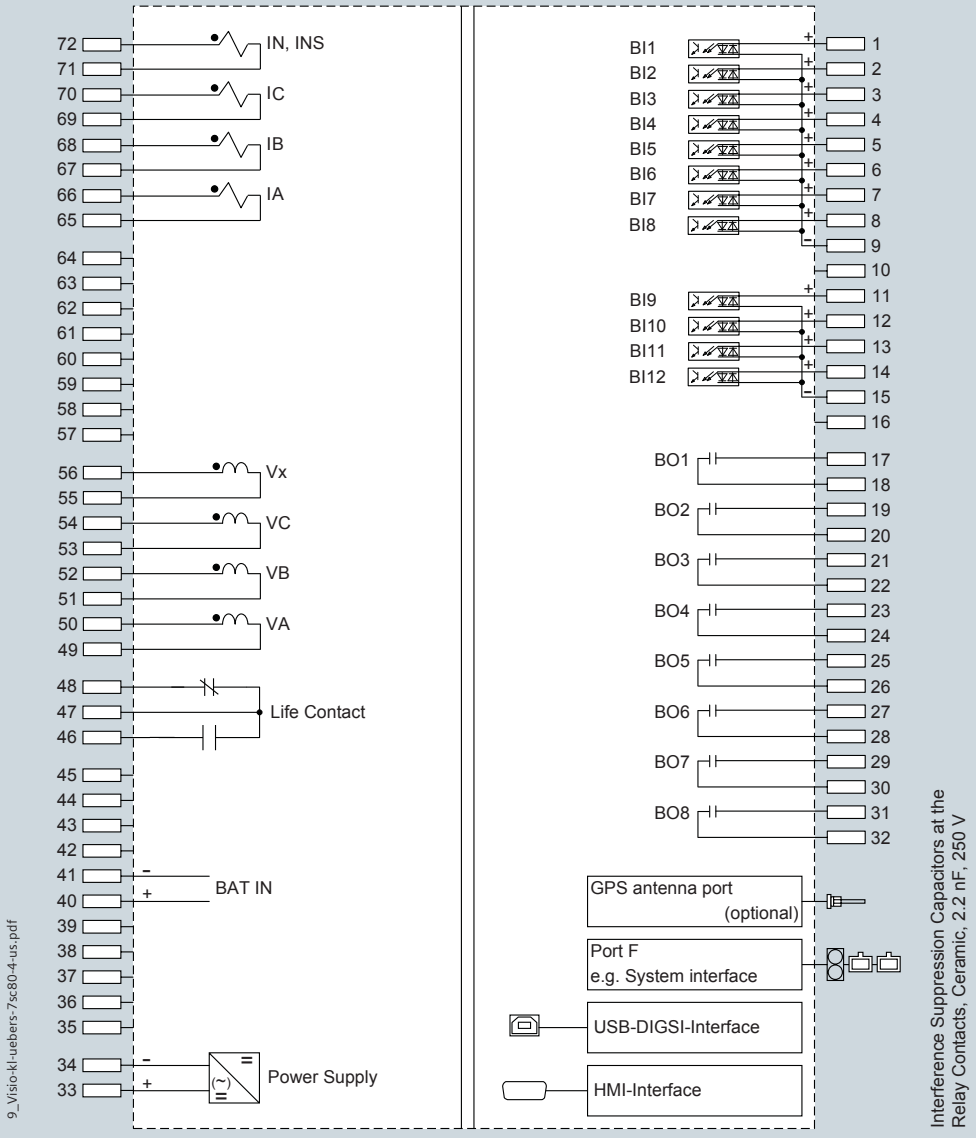

Fig. 9/27 Connection diagram SIPROTEC 7SC8024 and SIPROTEC 7SC8026

Connection examples

Connection of current and voltage transformers

Standard connection

For grounded networks, the ground current is obtained from the phase currents by the residual current circuit.

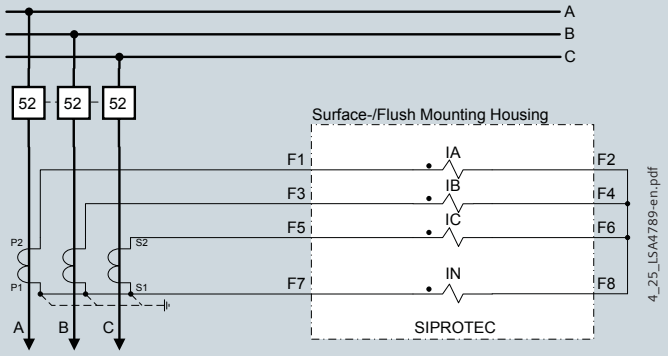

Fig. 9/28 Residual current circuit without directional element

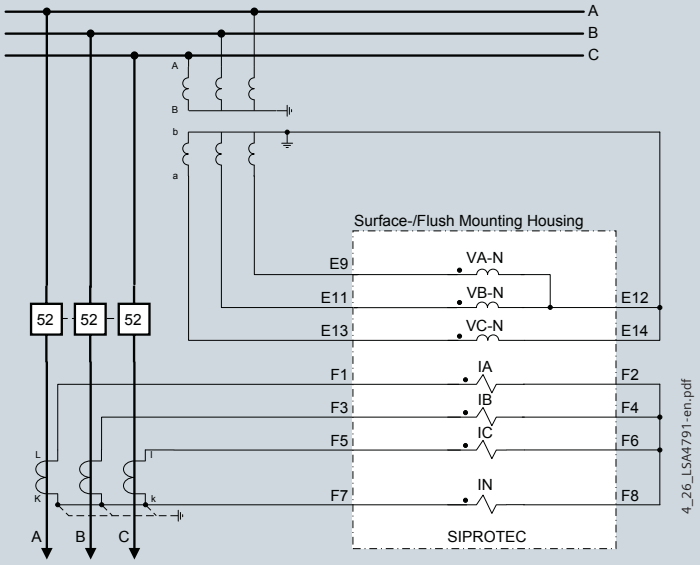

Fig. 9/29 Residual current circuit with directional element

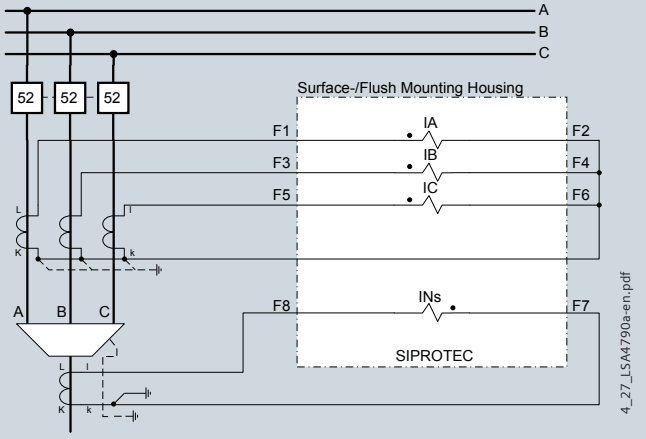

Fig. 9/30 Sensitive ground current detection without directional element

9

For power systems with small earth currents, e.g. isolated or compensated systems, the earth current is measured by a zero-sequence current transformer.

Connection for compensated networks

The figure shows the connection of two phase-to-ground voltages and the V_E voltage of the broken delta winding and a phase-balance neutral current transformer for the ground current. This connection maintains maximum precision for directional ground-fault detection and must be used in compensated networks.

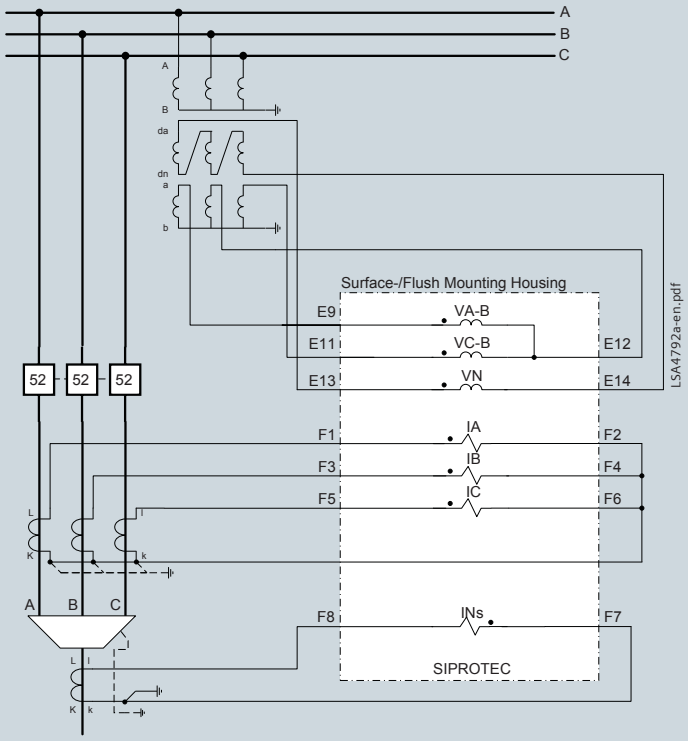

Fig. 9/31 Sensitive directional ground-fault detection with directional element for phases

Sensitive directional ground-fault detection.

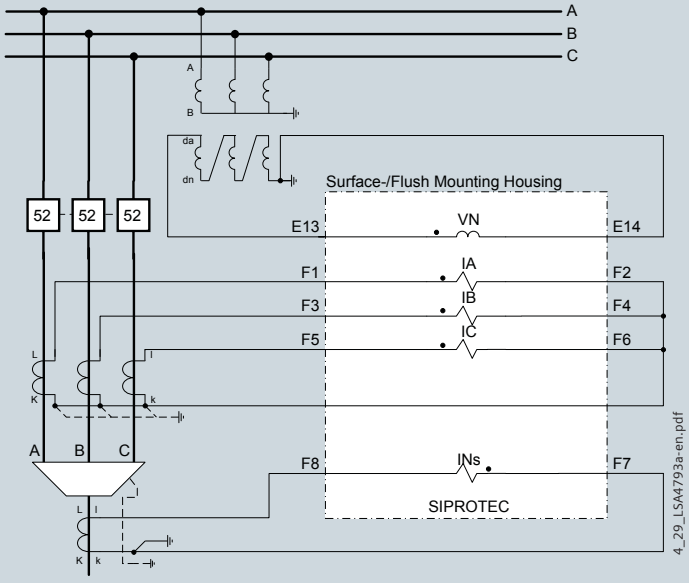

Fig. 9/32 Sensitive directional ground-fault detection

Connection examples

Connection for the synchrocheck function

If no directional earth-fault protection is used, connection can be done with just two phase current transformers. For the directional phase short-circuit protection, the phase-to-phase voltages acquired with two primary transformers are sufficient.

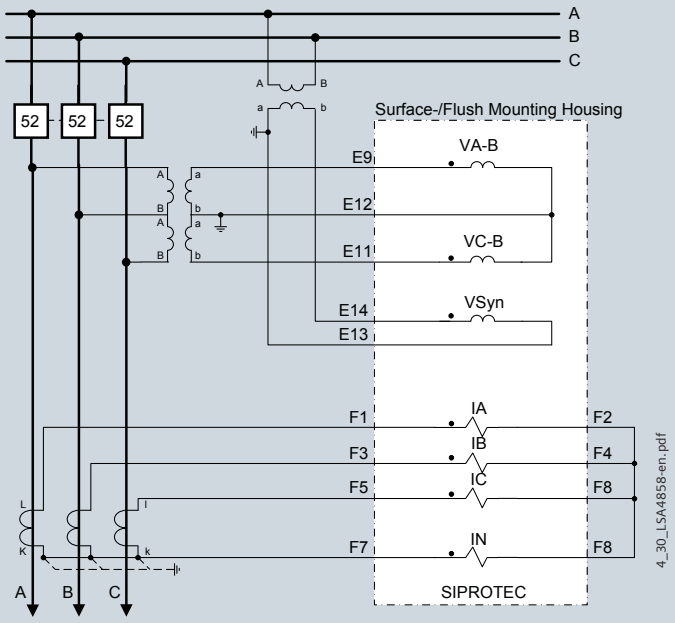

Fig. 9/33 Measuring of the busbar voltage and the outgoing feeder voltage for synchronization

Transformer connections to three current transformers and three voltage transformers

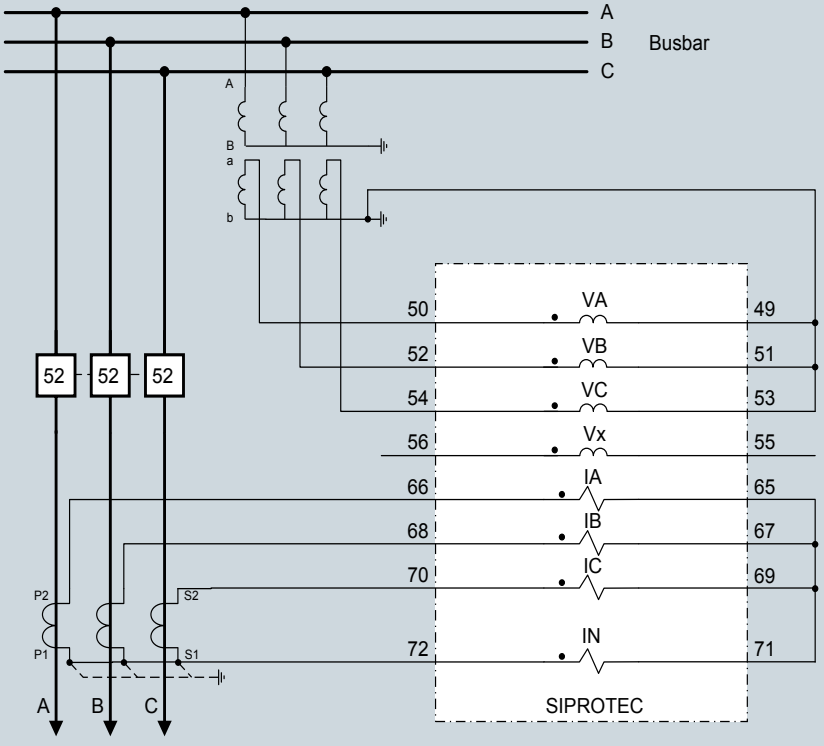

Fig. 9/34 Transformer connections to three current transformers and three voltage transformers (phase-to-ground voltages), normal circuit layout – appropriate for all networks.

Standard connection capabilities

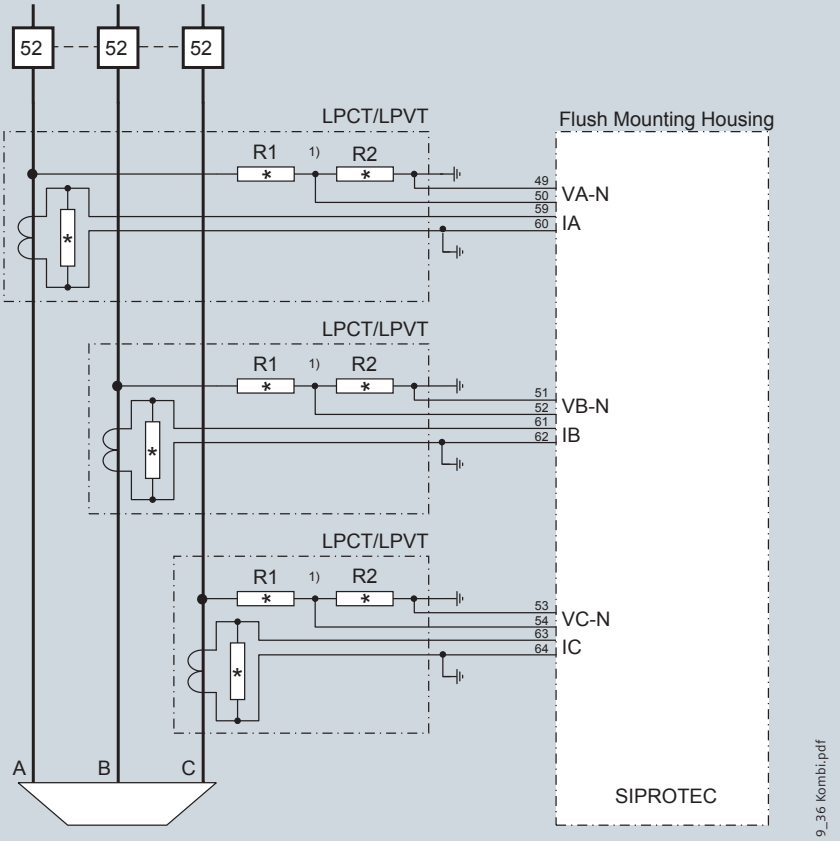

1) R1 and R2 represent the primary voltage divider.

Fig. 9/35 Connection to combined transformer with low-power current-transformer and integrated voltage divider for the 3 phases

Connection types

Overview of connection types

Type of network	Function	Current connection	Voltage connection
(Low-resistance) grounded networks	Time-overcurrent protection phase/ground non-directional	Residual circuit, with 3 phase-current transformers required, phase-balance neutral current transformers possible	–
(Low-resistance) grounded networks	Sensitive ground-fault protection	Phase-balance neutral current transformers required	–
Isolated or compensated networks	Overcurrent protection phases non-directional	Residual circuit, with 3 or 2 phase-current transformers possible	–
(Low-resistance) grounded networks	Directional time-overcurrent protection, phase	Residual circuit, with 3 phase-current transformers possible	Phase-to-ground connection or phase-to-phase connection
Isolated or compensated networks	Directional time- overcurrent protection, phase	Residual circuit, with 3 or 2 phase-current transformers possible	Phase-to-ground connection or phase-to-phase connection
(Low-resistance) grounded networks	Directional time-overcurrent protection, ground-faults	Residual circuit, with 3 phase-current transformers required, phase-balance neutral current transformers possible	Phase-to-ground connection required
Isolated networks	Sensitive ground-fault protection	Residual circuit, if ground current > 0.05 I_N on secondary side, otherwise phase-balance neutral current transformers required	3 times phase-to-ground connection or phase-to-ground connection with broken delta winding
Compensated networks	Sensitive ground-fault protection cos φ measurement	Phase-balance neutral current transformers required	3 times phase-to-ground connection or phase-to-ground connection with broken delta winding

Table 9/5 Overview of connection types

Description

The hardware variant of the SIPROTEC 7SC80 integrates an SNTP server and a GPS module.

With it the first substation hardened SNTP server with GPS receiver is available for precise time synchronization for all SIPROTEC protection devices and all other SNTP-capable devices, e.g. SICAM T/Q80 or 3rd-party products. Protection functions are not provided. The few configuration settings (e.g. IP-address) will be done with DIGSI 4.

The communication redundancy protocols RSTP/PRP/HSR and IEC 61850 are supported completely. With these features the SNTP Server with optical interfaces can be operated directly as part of SIPROTEC ring networks.

A GPS antenna kit with antenna, mounting and 25 m cable is available separately.

Funktionsübersicht

- GPS-antenna interface (SMB-connector)
- USB-Port for configuration with DIGSI 4
- Default equipped with 2 electrical Ethernet ports RJ45
- Dual armed connection in Active-Standby configuration
- Equipped with 2 optical Ethernet interfaces (optional)
- Detached operation possible, with single-mode interfaces up to 24 km
- Complete support of redundant ring structures with RSTP/PRP/HSR Protocol
- Fulfills EMC requirements in substations
- Extended temperature range -50 °C - +85 °C
- Robust against heavy GOOSE load in IEC 61850 networks
- Can be used as central data concentrator, e.g. recording of GOOSE messages
- Supports IEC 61850 Edition1 and Edition 2
- Integration in IEC 61850 substation controller (with max. 6 Clients)
- Integration in DIGSI 4 IEC 61850 system configurator
- Additional deployment for automation (CFC)
- Remote Access
- Optimized for use together with SIPROTEC devices and EA-Products
- In accordance with SIPROTEC protective relays.



Fig.9/36 SNTP-Master/Server 7SC80

Applications

With the 7SC80 SNTP time server all Ethernet attached devices can be synchronized via SNTP protocol (Simple Network Time Protocol) at a millisecond accuracy base. The transmitted time is standardized UTC-time or local time.

For this application all (protection) devices need a suitable Ethernet interface, e.g. in SIPROTEC 4 port B (EN100 module) is needed.

The GPS antenna is mounted to an outside wall or flat roof with line of sight to the sky (order separately).

The SNTP server will be mounted close to the antenna and will be typically supplied with the same auxiliary voltage as the protective relays. By using the optical interfaces, any EMC influence is excluded, even with long distances between SNTP Server and protective relays.

By using the 7SC80 for time synchronization the typical accuracy is ±1 ms. A dedicated network for time synchronization is not necessary.

The deployment of 7SC80 in redundant SNTP time server scenarios is possible as well. The integration in DIGSI-projects can be done with the complete 7SC80 parameter set; the usage of SNTP.ICD files is no longer necessary.

In the protective relays the time source has to be adjusted to „Ethernet NTP“. Local time settings, e.g. summer/winter time switchover or time offset, can be considered as well.

SNTP-Master/Server SIPROTEC 7SC80

Selection and ordering data

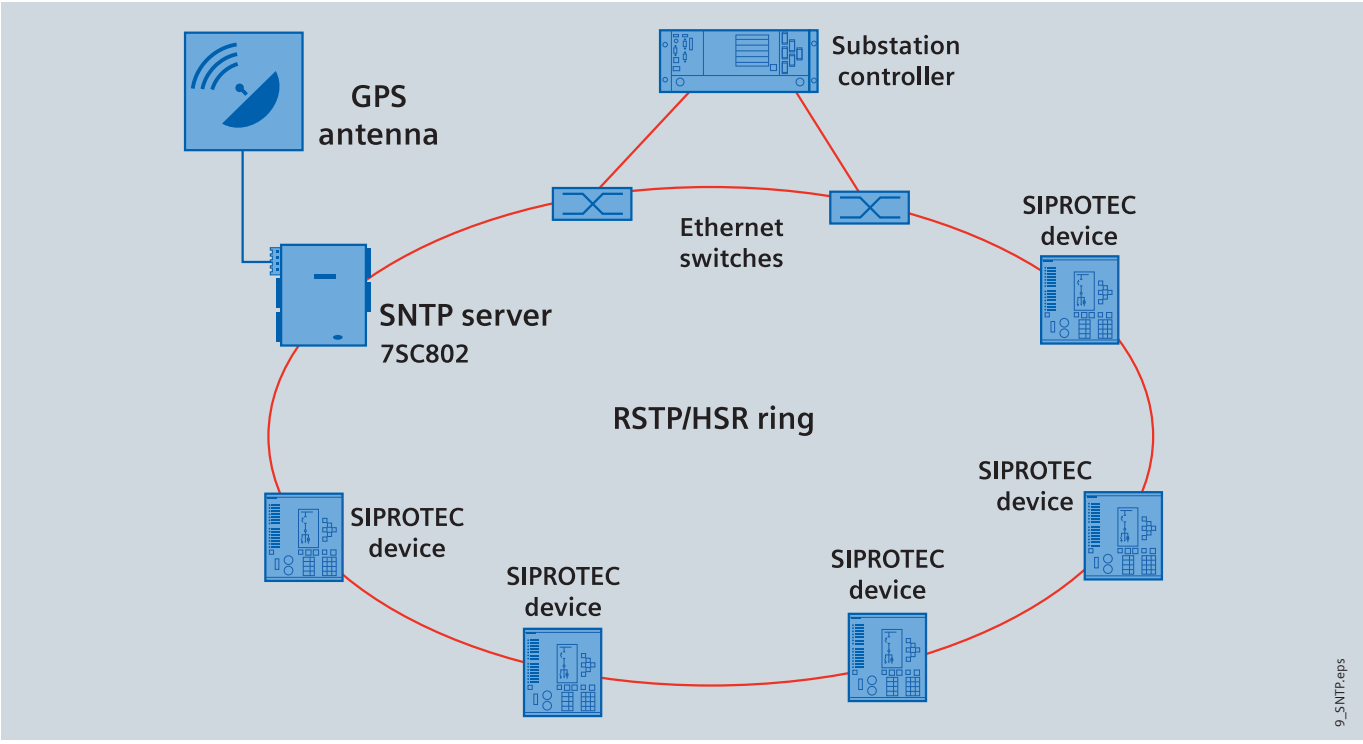

Fig. 9/37 Example of a redundant integration of a 7SC80 SNTP server in an optical SIPROTEC ring network

Selection and ordering data

Description	Order No.
	1 2 3 4 5 6 7 8 19
SNTP-Master/Server 7SC80	**7SC8021-□AB97-3FNO-L0□**
Rated auxiliary voltage	
DC 60 V bis 250 V; AC 115 V; AC 230 V	1
DC 24 V/48 V	2
System interface	
100 Mbit Ethernet, electical 2 x RJ45 Stecker	R
100 Mbit Ethernet, with integrated switch, optical, 2 x LC connector multi-mode	S
100 Mbit Ethernet, with integrated switch, optical, 2 x LC connector single-mode 24 km	T
GPS antenna kit	**7XV5663-0AA00**
Indirect lightning protection	**7XV5664-0LA00**

SIEMENS



Attachment
SIPROTEC Compact

Attachment

	Page
Ordering examples and accessories	10/3
Selection and ordering data	10/4
Dimension drawings	10/5
Legal notice	10/7

10

Ordering example

Position	Description	Order No.	Short code
		1 2 3 4 5 6 7 8 9 10 11 12 13 14 15 16 7RW80 2 0 - 5 E C 9 6 - 1 D A 0 + L 0 G	
6	Housing 1/6 19", 3xV, 7 BI, 8 BO[1], 1 life contact	2	
8	Rated auxiliary voltage: DC 60 V to 250 V; AC 115 V; AC 230 V	5	
9	Flush mounting housing, screw-type terminal	E	
10	Region US, language US-English, US front, ANSI	C	
11	Communication: System interface: DNP 3.0, electrical RS485	9	L 0 G
12	Communication: With Ethernet interface (DIGSI, not IEC 61850), RJ45 connector	6	
13	Measuring / fault recording	1	
14 / 15	Protection function: Voltage and frequency relay	D A	

1) 2 changeover/Form C.

Assessories

Product description	Variants	Order No.
DIGSI 4 Software for projecting and usage of all Siemens protection devices is running under 32 bit and 64 bit MS Windows XP Professional/ MS Windows 7 Ultimate, Enterprise and Professional, MS Windows Server 2008/R2	**Basis** Basic version with license for 10 computers (authorisation by serial number)	**7XS5400-0AA00**
	Professional DIGSI 4 Basis + SIGRA (Fault record analysis) + CFC-Editor (Logic-Editor) + Display-Editor (Editor for control displays) + DIGSI 4 Remote (Remote operation) with license for 10 computers (authorisation by serial number)	**7XS5402-0AA00**
	Professional + IEC 61850 Professional version and IEC 61850 System configurator with license for 10 computers (authorisation by serical number)	**7XS5403-0AA00**
Terminals		
Voltage terminal block C or block E		**C53207-A406-D181-1**
Voltage terminal block D (inverse printed)		**C53207-A406-D182-1**
Jumper voltage block (6 pice)		**C53207-A406-D194-1**
Standard USB cable (Typee A-Typee B)		available in specialist stores
Surface console	Accessories for flush-mounted variant perform an surface-mounted variant	**C53207-A356-D850-1**
Mounting bracket set for 19" frame		**C73165-A63-D200-1**

Attachment

Selection and ordering data

Description	Order No.
SIGRA 4 Software for graphic visualisation, analysis and evaluation of fault and measurement records is running under 32- and 64-Bit MS Windows XP Professional MS Windows 7 MS Windoxs Server 2008 R2 see product information for supported service packs of operating systems	
SIGRA 4 for DIGSI With license for 10 PCs (authorisation by serial number) For ordering the specification of a DIGSI 4 serial number is required.	**7XS5410-0AA00**
SIGRA 4 Scientific Installation without DIGSI 4 only for university-level institutions with license for 10 PCs (authorisation by serial number)	**7XS5416-1AA00**
Stand Alone Version Installation without DIGSI 4 (authorisation by serial number)	**7XS5416-0AA00**
Trial SIGRA 4 Like SIGRA 4 Stand Alone, but only valid for 30 days (test version) (no authorisation required)	**7XS5411-1AA00**
Upgrade SIGRA 4 Trial to SIGRA 4 Stand Alone Like SIGRA 4 Stand Alone. For customers who want to unlock their trial version. With license for 10 PCs	**7XS5416-2AA00**

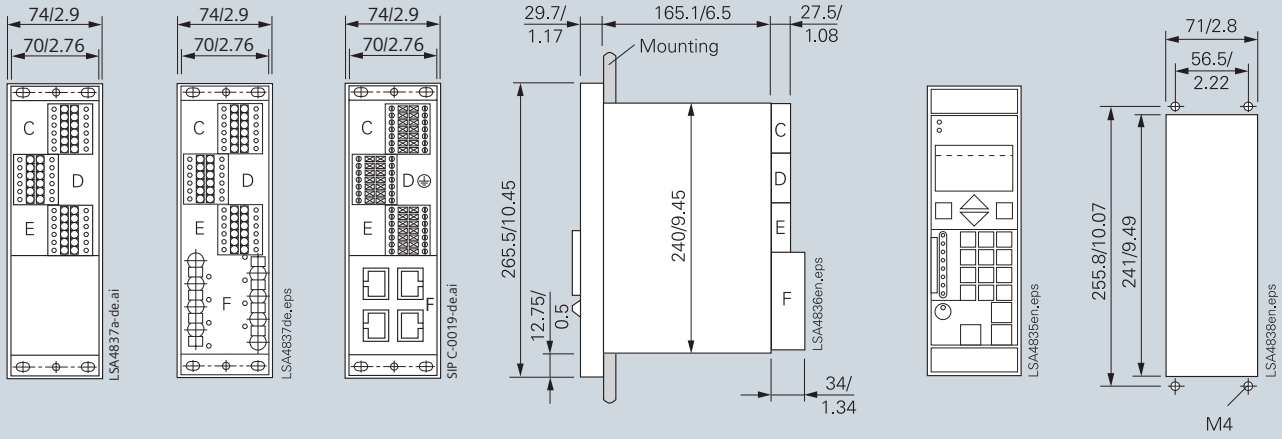

Rear view 7RW80 | Rear view 7SJ80, 7SK80 and 7SD80 | Rear view 7SJ81, 7SK81 | Side view | Front view | Panel cut-out

Fig. 10/1 Panel surface and cabinet flush mounting

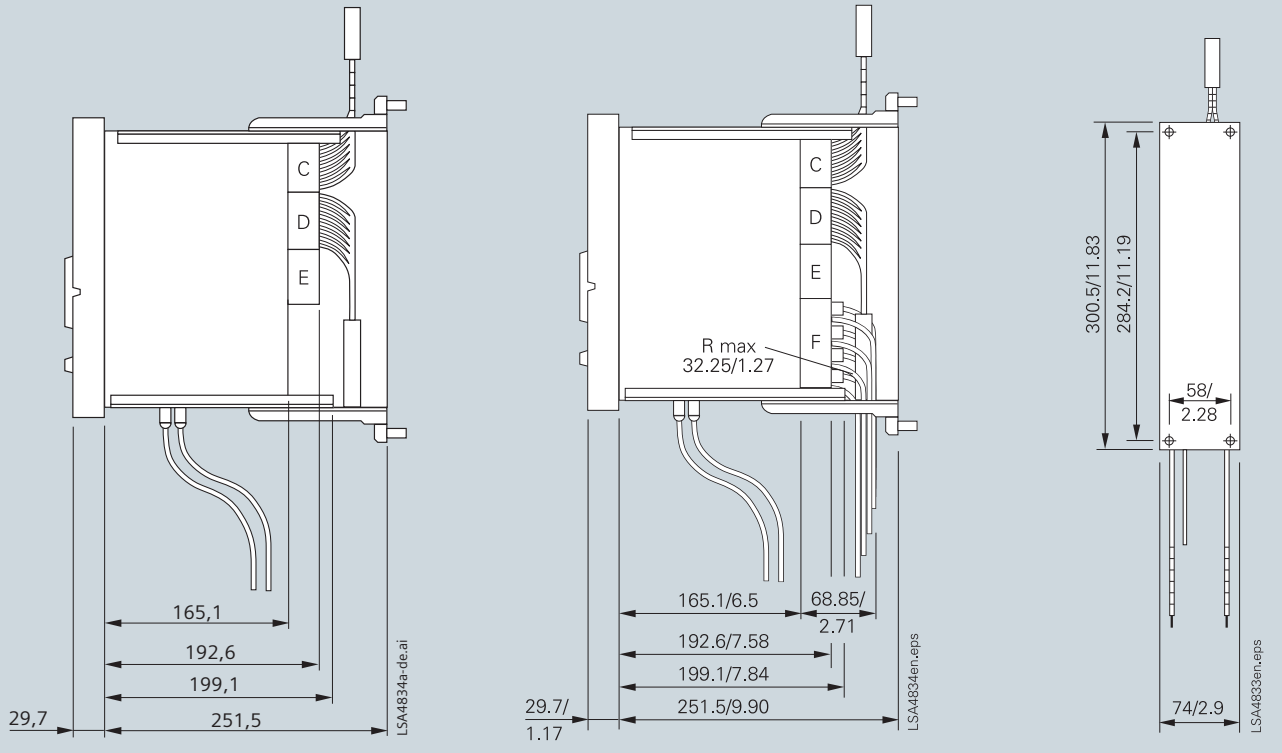

Side view 7RW80 | Side view 7SJ8, 7SK8, 7SD80 | Front view

Fig.10/2 Side views for panel surface mounting

Note: Dimensions in mm
Values in Brackets in inches

Dimension drawings

Dimension drawings SIPROTEC 7SC80

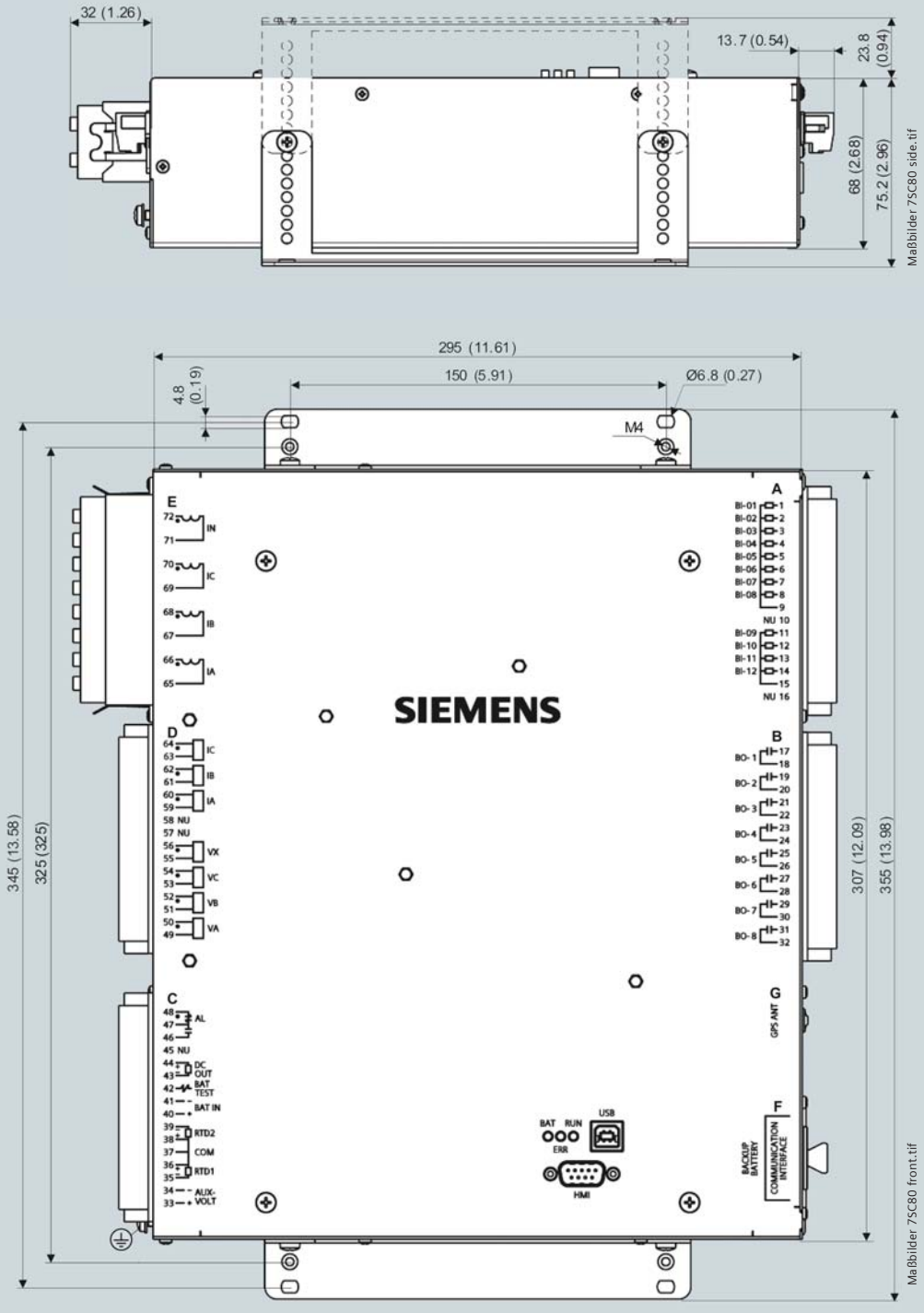

Fig. 10/3 SIPROTEC 7SC80 dimensions

Note: Dimensions in mm
Values in Brackets in inches

Legal notice

Indication of conformity

CE This product complies with the directive of the Council of the European Communities on the approximation of the laws of the Member States relating to electromagnetic compatibility (EMC Council Directive 2004/108/EC) and concerning electrical equipment for use within specified voltage limits (Low-voltage Directive 2006/95/EC).

This conformity has been established by means of tests conducted by Siemens AG in accordance of the Council Directive in agreement with the generic standards EN 61000-6-2 and EN 61000-6-4 for the EMC directives, and with the standard EN 60255-5 for the low-voltage directive.

The device has been designed and produced for industrial use. The product is conforming to the international standards of the series IEC 60255 and the German regulation of VDE 0435.

Disclaimer of liability

This document has been subjected to rigorous technical review before being published. It is revised at regular intervals, and any modifications and amendments are included in the subsequent issues. The content of this document has been compiled for information purposes only. Although Siemens AG has made best efforts to keep the document as precise and up-to-date as possible, Siemens AG shall not assume any liability for defects and damage which result through use of the information contained herein.

This content does not form part of a contract or of business relations; nor does it change these. All obligations of Siemens AG are stated in the relevant contractual agreements.

Document version: 03

Release status: 12.2013

Version of the product described: V4.x

Copyright

Copyright © Siemens AG 2013. All rights reserved.

The reproduction, transmission or use of this document or its contents is not permitted without express written authority. Offenders will be liable for damages. All rights, including rights created by patent grant or registration of a utility model or design, are reserved.

Registered trademarks

SIMATIC®, SIMATIC NET®, SIPROTEC®, DIGSI®, SIMEAS® , SICAM® and SINAUT® are registered trademarks of SIEMENS AG. All other product and brand names in this manual might be trademarks, the use of which by third persons for their purposes might infringe the rights of their respective owners.

Published by and copyright © 2014:
Siemens AG
Infrastructure & Cities Sector
Smart Grid Division
Energy Automation
Humboldtstr. 59
90459 Nuremberg
Germany

All rights reserved.
If not stated otherwise on the individual pages of this
catalog, we reserve the right to include modifications,
especially regarding the stated values, dimensions and weights.

Drawings are not binding.
All product designations used are trademarks or product
names of Siemens AG or other suppliers.
If not stated otherwise, all dimensions in this
catalog are given in mm (inch).

Subject to change without prior notice.
The information in this document contains general
descriptions of the technical Optionals available, which
may not apply in all cases. The required technical
Optionals should therefore be specified in the contract.

For all products using security features of OpenSSL the following shall apply:
This product includes software developed by the OpenSSL Project for use in
the OpenSSL Toolkit. (http://www.openssl.org/)
This product includes cryptographic software written by Eric Young
(eay@cryptsoft.com)

For more information,
please contact our
Customer Support Center.
Tel.: +49 180 524 84 37
Fax: +49 180 524 24 71
(Charges depending on provider)
E-Mail: support.ic@siemens.com
www.siemens.com/siprotec

Order No. IC1000-K4403-A011-A3-7600
Printed in Germany
Dispo 06200
KG 01.14 1.6 210 En
E02018413 HHGlobal
Printed on elementary chlorine-free bleached paper.