SIEMENS



www.siemens.com/energy

Three-Phase Distribution Transformers 50 to 3150 kVA

Answers for energy.

Range covered, standards and specifications 2
Range covered 2
Standards and specifications 2
Terms and parameters 3
Core 3
Windings 3
Tappings and tapping range 3
Voltages 3
Currents 3
Operational rating 4
Rated power (S_r) 4
Rated frequency (f_r) 4
Rated voltage ratio (n_r) 4
Losses*) 4
Impedance voltage at rated current (U_{Zr}, u_{Zr}) 5
Impedance voltage (U_Z, u_Z) 5
Resistance voltage (U_R, u_R) 5
Reactance voltage (U_X, u_X) 5
Sustained short-circuit current (I_{kd}) 6
Voltage drop ($u\varphi$) 6
Efficiency (η) 6
Connections and vector groups 6
Noise level 7
Tolerances 7
60 Hz rated frequency 8
60 Hz supply 8
Design for 60 Hz with 10% higher rated power 8
Single-phase transformers 8
Testing 9
Routine tests 9
Type and special tests 9
Acceptance tests 9
Transformer operation 10
Temperature rise 10
Overload capacity 10
Installation 11
Parallel operation 11
General requirements for parallel operation 11
Economics of parallel operation 15

*) Information on the evaluation of transformer losses is available on request.

Range covered, standards and specifications

Range covered

This publication contains general information on distribution transformers derived from EN 60076 and from IEC Publication 60076. It is applicable to liquid-immersed distribution transformers, GEAFOL cast-resin transformers, and transformers with higher ratings. Any differences are expressly indicated.

Standards and specifications

The transformers comply with the relevant VDE regulations for "Transformers and reactors" and the "Technical conditions of supply for three-phase transformers" issued by VDEW and ZVEI.

They also satisfy the requirements of the international standards in IEC Publication 60076.

For other specifications, enquiries are necessary. Only the US (IEEE/ANSI/NEMA) and Canadian (CSA) standards differ from IEC to any substantial degree.

Terms and parameters

Core
The core carries the magnetic flux.

Windings
The windings carry the magnetomotive force. The winding that takes in power is called the input winding and the one that delivers power is the output winding. The winding designed for the highest rated voltage is called the high-voltage winding and the one for the lowest rated voltage is the low-voltage winding.

Tappings and tapping range
Tappings are additional connections to the windings for altering the voltage ratio.

The tapping range is the difference between the rated voltage and the maximum or minimum adjustable voltage of a winding. The tapping range is specified as a positive and negative percentage of the rated voltage.

Voltages
The maximum voltage for equipment U_m is the maximum rms value of the phase-to-phase voltage for which the insulation of a transformer winding is designed. Standard values for U_m in kV are specified in EN 60076-3 and IEC-Publication 60076-3. The U_m values are related to values of rated power frequency withstand voltage (AC, rms) and rated lightning impulse withstand voltage (*LI*, peak value; for $U_m > 1.1$ kV only) that identify the insulation level of the particular winding.

The rated voltage (U_r) of a winding is that voltage which must be applied between the line terminals of one winding of a multi-phase transformer, or between the terminals of a single-phase transformer winding, or which occurs there at no-load.

No-load voltage
is the voltage between the connecting terminals of an energized transformer on the non-loaded output side.

Full-load voltage
is the voltage between the connecting terminals on the output side when the transformer is carrying rated current. It is a function of the power factor cos φ.

Currents
Rated current (I_r)
is the current flowing through the line terminal of a winding; it is calculated by dividing the rated power of the winding by its rated voltage and by the corresponding phase factor.



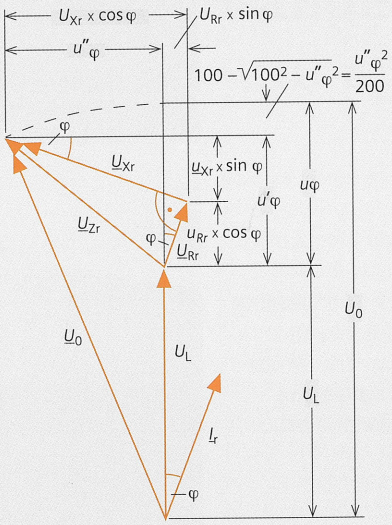

Fig. 1: Graphical determination of the voltage drop $u\varphi$ at rated current I_r

No-load current (I_0)
is the current flowing through the line terminal of one winding when rated voltage at rated frequency is applied to it and while the other winding(s) are carrying no load. It is expressed as the mean value of the three phases and as a percentage of the rated current.

Operational rating
The operational rating is defined as operation at rated voltage on the input side, rated current on the output side, and rated frequency.

Rated power (S_r)
Rated power is the apparent power that provides a basis for design and testing and that determines a specific value of rated current which may flow when rated voltage is applied.

Rated frequency (f_r)
Rated frequency is the operating frequency for which the transformer is designed.

Rated voltage ratio (n_r)
The rated voltage ratio is the proportion of the rated voltage of one winding to the lower or equal rated voltage of another winding.

Losses
No-load loss (P_0)
is the active power consumed when rated voltage at rated frequency is applied to the terminals on one winding while the other winding remains unloaded. It comprises the losses in the core and in the dielectric and the losses arising from the no-load current in the windings. The losses in the dielectric and the windings are generally insignificant.

Iron loss, i.e. the majority of the no-load loss, comprises hysteresis loss and eddy-current loss.

Hysteresis loss is due to the movement of the microcrystals which behave as elementary magnets. They provide a resistance to all rotations and alignments and the work expended is generally irreversible; it occurs as a heat loss.

Eddy-current loss, which occurs in addition to hysteresis loss, is due to the time-variable magnetic field which induces voltages in the iron. These voltages give rise to currents which circulate in closed circular paths. The relationship I^2R between the eddy currents and the resistance of the iron produces the eddy-current loss. However, this loss can be kept to a minimum by using very thin laminations insulated from each other.

Load loss (P_k)
is the active power consumed at rated frequency when rated current is flowing through the line terminal of one winding while the terminals of the other winding are short-circuited. The load loss comprises the heat loss due to the current in the resistance (I^2R) and the additional losses caused by eddy currents in the windings and in the structural components.

The load loss is converted to a reference temperature. For oil-immersed transformers, this reference temperature is 75°C. For cast-resin transformers, the following values apply:

A =	80°C
E =	95°C
B =	100°C
F =	120°C
H =	145°C

If a transformer features different classes, the highest reference temperature for the particular class applies. In a conversion to 75°C, for example, the proportion of the loss corresponding to the DC resistance must be increased in the ratio

$$\frac{225 + 75}{225 + \vartheta_c}$$

in the case of aluminum windings, whereas the proportion corresponding to the additional losses must be reduced in the ratio

$$\frac{225 + \vartheta_c}{225 + 75}$$

where ϑ_c is the temperature at which the losses are measured. For copper windings, the conversion constant "225" in the formula must be changed to "235."

For a load other than the operational rating, the load loss P_k varies in the ratio

$$\left(\frac{\text{Load current}}{\text{Rated current}}\right)^2$$

Impedance voltage at rated current (U_{Zr}, u_{Zr})

Impedance voltage at rated current is that voltage which must be applied at rated frequency to the line terminals of one winding of a multi-phase transformer, or to the winding terminals of a single-phase transformer, in order to cause rated current to flow through the terminals while the terminals of the other winding are short-circuited. The impedance voltage at rated current is usually expressed as a percentage of the rated voltage of that winding to which the voltage is applied.

Impedance voltage (U_Z, u_Z)

This impedance voltage is similar to the impedance voltage at rated current, but can refer to values of current and/or tappings other than the principal tapping. When the load differs from the operational rating, the impedance voltage expressed as a percentage of the rated voltage is

$$u_Z = u_{Zr} \frac{\text{Load current}}{\text{Rated current}} \quad [\%]$$

Resistance voltage (U_R, u_R)

Resistance voltage is that component of an impedance voltage that is in phase with the current. It is calculated for rated current as a percentage of the rated voltage as follows:

$$u_{Rr} = \frac{P_k\,[\text{kW}]}{S_r\,[\text{kVA}]} \times 100\ [\%]$$

Reactance voltage (U_X, u_X)

Reactance voltage is that component of an impedance voltage that is displaced in phase from the current by 90°. It is calculated for rated current as a percentage of the rated voltage as follows:

$$u_{Xr} = \sqrt{u_{Zr}^2 - u_{Rr}^2} \quad [\%]$$



Sustained short-circuit current (I_{kd})

Sustained short-circuit current is the rms value of the current at the line terminal which occurs after the DC component has decayed and when there is a triple-pole short-circuit on the output side, assuming a constant input voltage.

When the transformer is operated at rated voltage and frequency and is set to the principal tapping, the sustained short-circuit current can be calculated from the rated current Ir and from the impedance voltage at rated current u_{Zr} as follows:

$$I_{kd} = \frac{I_r\,[A]}{u_{Zr}\,[\%]} \times 100$$

Voltage drop ($u\varphi$)

The voltage drop is the difference between the rated voltage of a winding and that voltage which occurs at particular values of load and power factor when rated voltage is applied to the other winding(s).

The voltage drop on the principal tapping as a percentage of the rated voltage is the same for a certain value of partial load n and a certain power factor cos φ:

$$u_\varphi = n \times u_\varphi' + \frac{1}{2}\,\frac{(n \times u_\varphi'')^2}{10^2}\,[\%]$$

where

$$u_\varphi' = u_{Rr} \times \cos\varphi + u_{Xr} \times \sin\varphi$$

$$u_\varphi'' = u_{Rr} \times \sin\varphi + u_{Xr} \times \cos\varphi$$

u_{Rr} and u_{Xr} (see above)

$$n = \text{Partial-load factor} = \frac{\text{Partial load}}{\text{Rated power}}$$

For impedance voltages at rated current up to 4%,

$$u\varphi \approx n \times u\varphi'$$

and similarly

$$u\varphi \approx n \times u_{Rr},$$

where cos φ = 1.

Efficiency (η)

Efficiency is the ratio of output active power to input active power.

For a particular value of partial load n and power factor cos φ, the formula is as follows:

$$\eta = 100 - \frac{P_O + n^2 \times P_k}{n \times S_r \times \cos\varphi\,(1 - \frac{U\varphi}{100}) + P_O + n^2 \times P_k} \times 100\,[\%]$$

$$\approx 100 - \frac{P_O + n^2 \times P_k}{n \times S_r \times \cos\varphi + P_O} \times 100\,[\%]$$

The latter formula yields sufficiently accurate values for practical purposes.

A transformer is at maximum efficiency when the loading is such that $P_0 = n^2 \times P_k$. This occurs at a load factor (referred partial load) of

$$n = \sqrt{\frac{P_O}{P_k}}$$

Connections and vector groups

The connections of three-phase transformers are the interconnections of the phase windings on the input or output sides to form star, delta or zigzag connections. Diagrams of these connections and the corresponding vector diagrams are shown in *Fig. 2*. The vector group is a notation indicating the connection of the phases of two windings of a transformer and their relative phase displacement. The connections are identified by the following code letters:

Star connection	Y, y
Delta connection	D, d
Zigzag connection	Z, z

The upper-case letters refer to the connections of the high-voltage winding and the lower-case letters to those of the low-voltage winding. Upper-case letters are always written first in the vector groups.

When the neutral point of a winding is brought out in a star or zigzag connection, the notation is YN or ZN and yn or zn.

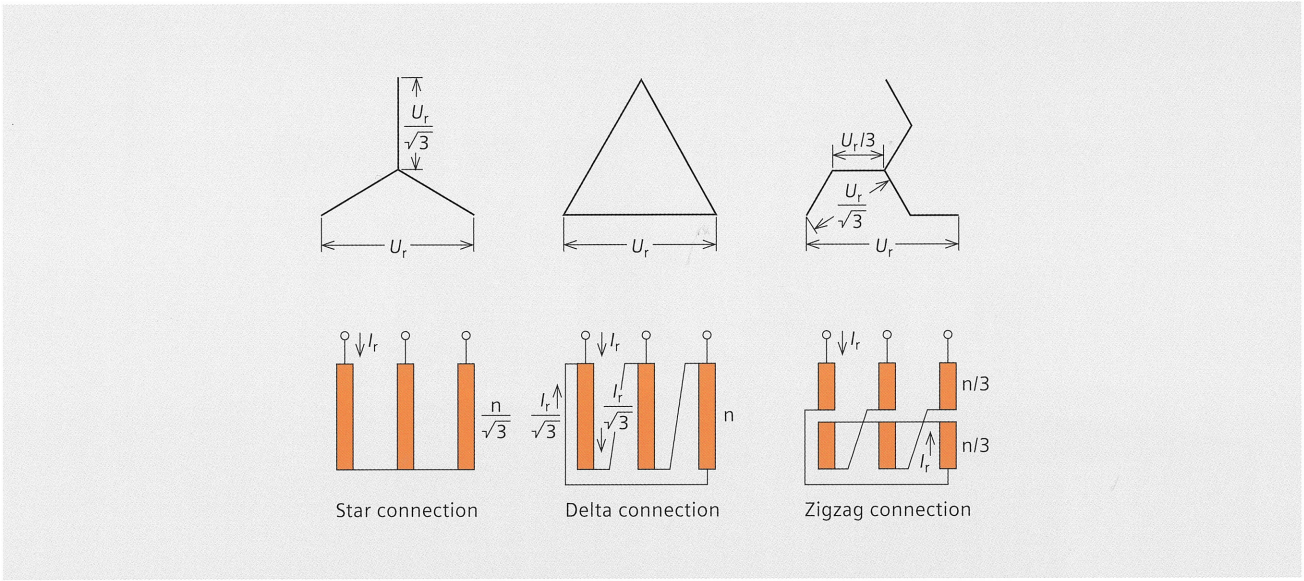

Fig. 2: Three-phase transformer connections and vector diagrams

The numeral (0, 5, etc.) in the vector diagram indicates the multiple of 30° by which the low-voltage vector lags counter-clockwise behind the high-voltage vector with the corresponding terminal designation.

Common vector groups
The most common vector groups are:

Yy0 (Yy6), Yz5 (Yz11), Dy5 (Dy11)

Transformers with these vector groups can have a neutral point brought out on the output side for connection of a neutral conductor in a three-phase distribution system. The vector-group notation is then:

Yyn0 (Yyn6), Yzn5 (Yzn11), Dyn5 (Dyn11)

On transformers of vector groups Yyn0 (Yyn6), the neutral point may only be used for grounding purposes or for a load not exceeding 10% of the rated current. Therefore, the Yyn connection is generally unsuitable for feeding distribution systems having a fourth, neutral conductor. One of the other vector groups must be used. The Yzn and Dyn connections allow the neutral point to carry 100% of the rated current.

In the zigzag connection the current from the line terminal to the neutral terminal always flows through two limb windings.

The included angle between the partial voltages of each limb in the three-phase system is 120°.

Therefore, the voltage between the line terminals of the turns (n) comprising a phase is not twice the partial voltage per limb, but only $\sqrt{3}$ of the partial voltage. This means that the zigzag connection requires $\frac{2}{\sqrt{3}}$ more winding material than the star connection.

The delta connection requires $\sqrt{3}$ times more turns on each limb than the star connection in order to obtain the same voltage.

On the other hand, the conductor cross-section for the delta connection is $\frac{1}{\sqrt{3}}$ times smaller than for the star connection.

Noise level

The noise produced by distribution transformers is primarily due to magnetostriction in the core laminations. The noise standards for oil-immersed transformers are defined in DIN EN 50464 and for cast-resin transformers in EN 50541-1.

The noise level is taken as the sound power measured according to DIN EN 60076-10.

Tolerances

Due to limitations in accuracy of manufacture, it is necessary to allow tolerances with respect to the technical data. Such tolerances are the permitted deviation of the actual value from the setpoint. They are defined in the individual standards and specifications and are quoted as a percentage of the setpoint.



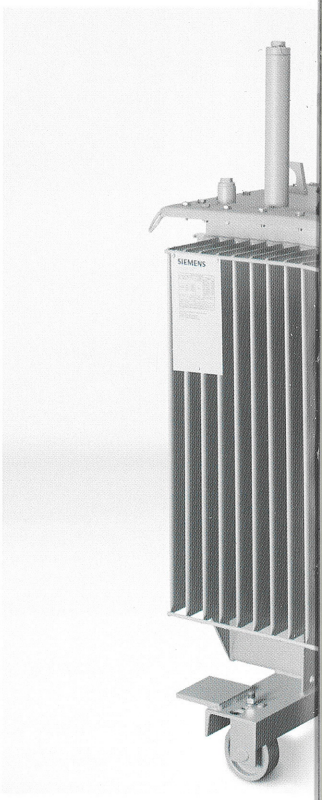

60 Hz rated frequency

60 Hz supply

A transformer designed for a rated frequency of 50 Hz can also be operated in a system of identical voltage but with a rated frequency of 60 Hz. The rated power and load loss remain the same, but the no-load loss falls by 20 to 25% and the reactance voltage increases by about 20%.

Design for 60 Hz with 10% higher rated power

In this case, the load loss, no-load loss and temperature rise are unchanged.
Resistance voltage:

$$u_{Rr\ 60\ Hz} = \frac{u_{Rr}}{1.1}\ [\%]$$

Impedance voltage at rated current

$$u_{Zr\ 60\ Hz} = \sqrt{\left(\frac{u_{Rr}}{1.1}\right)^2 + 1.2 \times (u_{Zr}^2 - u_{Rr}^2)}\ [\%]$$

Single-phase transformers

Approximate rated data for a single-phase transformer having a power $\frac{2}{3}$ of that of a three-phase transformer listed in the catalog can be ascertained from the catalog data as follows:

$$P_{0\ 1\text{-ph.}} \approx \frac{2}{3} P_{03ph}$$

$$P_{k\ 1\text{-ph.}} \approx \frac{2}{3} P_{k3ph}$$

$$u_{Z\ 1\text{-ph.}} \approx u_{Z\ 3ph}$$

$$\text{Weight}_{1\text{-ph.}} \approx 0.7 \times \text{weight}_{3ph}$$

$$\text{Length}_{1\text{-ph.}} \approx 0.7 \times \text{length}_{3ph}$$

$$\text{Width}_{1\text{-ph.}} \approx \text{Width}_{3ph}$$

$$\text{Height}_{1\text{-ph.}} \approx \text{Height}_{3ph}$$

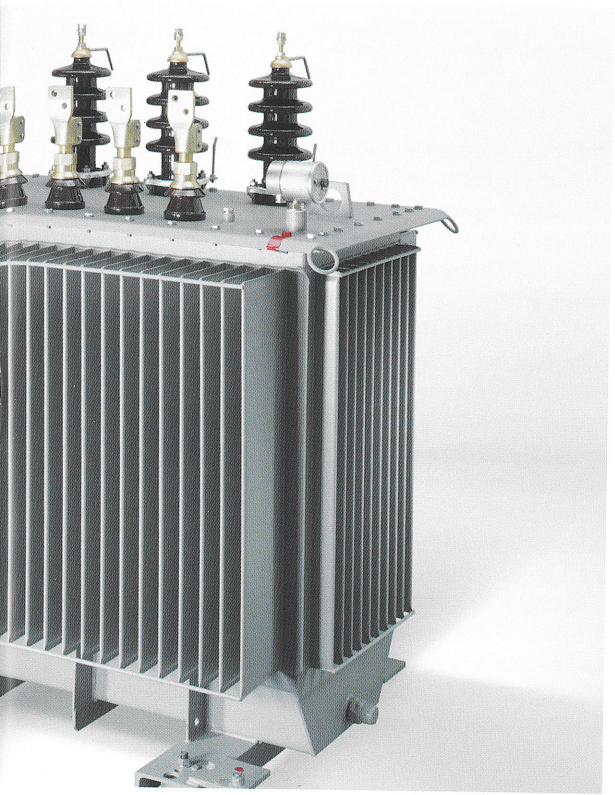

Testing

The purpose of testing is to prove conformity with the technical data and to ensure that the transformer operates properly. Our transformers are subjected to all the routine tests and type tests specified in EN 60076 and IEC Publication 60076 and the respective national regulations listed on page 2.

Routine tests

Routine tests are carried out on all transformers and involve the following measurements and checks:

- Measurement of winding resistance
- Measurement of voltage ratio and verification of polarity or vector group
- Measurement of impedance voltage
- Measurement of load loss
- Measurement of no-load loss and no-load current
- Induced overvoltage withstand test
- Separate-source voltage withstand test
- Test of freedom from partial discharges (cast-resin transformers)

Test reports are issued.

Type and special tests

Type tests are carried out whenever a new range of equipment is introduced or at the customer's request. They include:

- Measurement of temperature rise
- Lightning impulse test
- Measurement of noise level
- Short-circuit test
- Test of climatic, fire and environmental class

Acceptance tests

These tests are a repetition of the routine and type tests and therefore involve additional work and expense.



Transformer operation

Temperature rise

Transformers are designed so that the temperature rise specified by the regulations is not exceeded during operation under rated conditions. The temperature rise of the winding and that of the cooling and insulating liquid (in the case of liquid-immersed transformers) is the difference in temperature between the winding and the ambient air. The regulations specify maximum temperatures as well as average daily and annual temperatures for the ambient air.

For the winding, the mean temperature rise determined through resistance in relation to temperature applies.

The maximum temperature rise of the cooling and insulating liquid is obtained by measurement at the thermometer pocket. On our transformers, it is usually less than the permitted temperature rise of the insulating liquid.

Overload capacity

Overloading of a transformer is permitted by IEC regulations, provided that the specified coolant temperatures are not exceeded. The temperature rise figures may be increased by the same amount. The corresponding increase in power can be determined for our transformers by a rule-of-thumb method as follows: 1% per 1 K[1)] below the cooling-air temperature for oil-immersed transformers, 0.6% per 1 K for GEAFOL transformers.

Overloading without exceeding the permitted winding temperature rise is also permissible for short periods, provided that the preceding continuous load has been below the rated power level, and thus the permitted temperature rise figure has not been attained. Additional overload capacity (as a function of power up to about 50%) can be obtained by forced cooling of the transformers with fans (it can also be performed subsequently if necessary).

Transformers are usually operated in a continuous, repetitive 24-hour load cycle. Under these conditions, the use of life of the transformer is usually less than the "normal" use of life, which assumes continuous operation at rated power and at an ambient temperature of 20°C.
DIN IEC 60076-7 "Loading guide for oil-immersed transformers" and IEC 60076-12 "Loading guide for dry-type transformers" provide guidelines for checking the load capacity or for selecting a suitable transformer size, while taking into account temporarily increased or reduced use of life.

Values of overload capacity for liquid-immersed transformers and GEAFOL cast-resin transformers are given in the relevant catalogs.

Fig. 3: Possible connections for the parallel operation of transformers with vector group numerical indices of 5 and 11

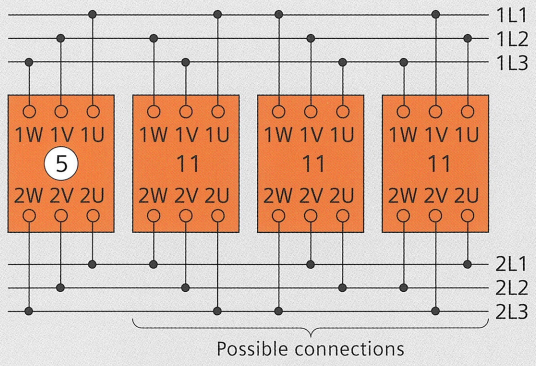

1L1, 1L2, 1L3 – High voltage
2L1, 2L2, 2L3 – Low voltage
Required index 5

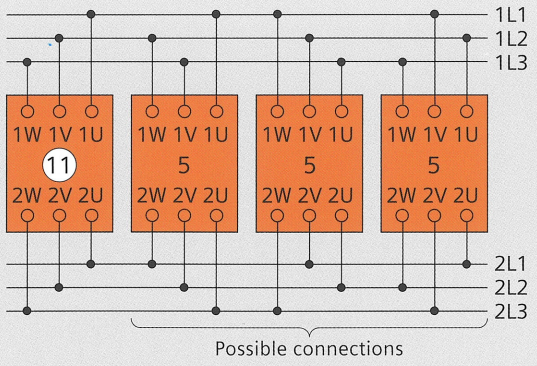

1L1, 1L2, 1L3 – High voltage
2L1, 2L2, 2L3 – Low voltage
Required index 11

1) 1 K = SI unit 1°C temperature difference

Installation

Transformers listed in the catalogs are suitable for installation at altitudes up to 1000 m above sea level. Because the cooling properties of air decrease with increasing altitude, either a special design must be used or the rated power must be reduced for altitudes above 1000 m. For every 100 m above the permitted installation altitude, the rated power must be reduced by approx. 0.4% for liquid-immersed transformers and by approx. 0.5% for dry-type transformers. Because the dielectric strength of air also decreases with altitude, the installation altitude must be stated in the order if this altitude is more than 1000 m above sea level so that flashover distances and minimum air clearances can be designed accordingly.

If transformers are to be operated at locations where the cooling-air temperature exceeds the values specified in the regulations, the permitted temperature rise must be reduced equal to the increase in cooling-air temperature. The values shall be rounded to the nearest whole number of K.

In a similar manner to the increases in power, decreases in power for our transformers can also be determined by a rule-of-thumb method as follows:

- 1.5 % per 1 K above the cooling-air temperature for oil-immersed transformers
- 0.8 % per 1 K for GEAFOL transformers

When transformers are intended for operation under tropical conditions, any special requirements concerning paint finish and temperature must be stated. For hot and humid tropical climates and for exposure to sea air or industrial atmospheres, we recommend the use of oil-immersed transformers with dehydrating breathers (if not hermetically sealed) and GEAFOL transformers with special paintwork.

Parallel operation

Parallel operation means transformers are connected to the same power systems on the input side and on the output side. There are two types of parallel operation:

- In parallel with bus
- In parallel with system

General requirements for parallel operation

Vector groups of equal phase displacement

Transformers with vector groups of equal phase displacement are suitable for parallel operation. The terminals with similar notation must be interconnected. However, it is also possible to operate transformers with certain other vector groups of different phase displacement in parallel if the line terminals are interchanged appropriately. *Fig. 3* shows the possible connections for parallel operation of transformers with vector groups with the commonly used numerical indices 5 and 11.

Approximately equal voltage ratio and tapping range

When the voltage ratios are equal, the total load is distributed between the parallel-connected transformers in direct proportion to the transformer powers and in inverse proportion to their impedance voltages. When the input voltages of two parallel-connected transformers are equal and the output voltages are unequal, an equalizing current flows through both transformers that can be determined from the following approximate formula:

$$I_{\text{Equal Tr 1}} \approx \frac{I\ \Delta u\ I}{u_{Zr1} + u_{Zr2} \times \frac{S_{r1}}{S_{r2}}} \times 100$$

$I_{\text{Equal Tr 1}}$ = Equalizing current as % of rated current of Transformer 1

$I\ \Delta u\ I$ = Absolute value of voltage difference as % of output voltage of Transformer 1 at no-load

u_{Zr1}, u_{Zr2} = Impedance voltages at rated current or impedance voltages for certain tappings and/or deviations from the rated induction for Transformers 1 and 2

$\frac{S_{r1}}{S_{r2}}$ = Ratio of rated powers

The equalizing current is completely independent of the load and of its distribution; it also flows when there is no load.

	No-load output voltage V	Rated power kVA	Impedance voltage at rated current %
Transformer 1	400	630	6
Transformer 2	390	1000	6

$$|\Delta u| = \left|\frac{400-390}{400} \times 100\right| = 2.5\,\%$$

$$\frac{S_{r1}}{S_{r2}} = \frac{630}{1000} = 0.63$$

$$I_{\text{Equal Tr 1}} \approx \frac{2.5}{6 + 6 \times 0.63} \times 100 \approx 25.6\,\%$$

Example 1

	No-load output voltage V	Rated power kVA	Impedance voltage at rated current %
Transformer 1	400	630	6
Transformer 2	411	1000	5.7 (≈ 95% of 6)

$$|\Delta u| = \left|\frac{400-411}{400} \times 100\right| = 2.75\,\%$$

$$\frac{S_{r1}}{S_{r2}} = \frac{630}{1000} = 0.63$$

$$I_{\text{Equal Tr 1}} \approx \frac{-2.75}{6 + 5.7 \times 0.63} \times 100 \approx 28.7\,\%$$

Example 2

When a load is present, the load current is added geometrically to the equalizing current. If the load current has an inductive power factor, this results in an increased total current in the transformer with the higher secondary voltage and a decreased total current in the transformer with the lower secondary voltage.

In *Example 1* above, it is unfortunately the smaller transformer that has the higher secondary voltage and therefore must carry the higher total current. Based on this example, this means that when the equalizing current is 25.6%, a load current of only 74.4% is permitted to avoid exceeding the rated current of Transformer 1 (= 100%). Therefore, the whole transformer set can be operated at only 74.4% of its total power of 630 + 1000 = 1630 kVA, i.e. approx. 1213 kVA. When the load power factor is less than 0.9, this approximate calculation gives sufficiently accurate values, but when the power factor exceeds 0.9 the increasing vectorial differential raises the permitted total power.

Under certain circumstances, changing the setting of the tapping switch on one transformer can improve the load capacity. If, in the case of the 630 kVA transformer in *Example 1*, it were possible to select a higher tapping on the high-voltage side (for example, 5% more turns), the low voltage would be reduced by 1/1.05 (i.e. to 381 V instead of 400 V) owing to the reduced induction with connection to the same high voltage. If this method were to produce too low a distribution voltage, a possible alternative would be to select a lower tapping on the high-voltage side of the 1000 kVA transformer (for example, 5% fewer turns), which would increase the low voltage by 1/0.95 (i.e. to 411 V instead of 390 V) owing to the increased induction (it must be verified that this is permissible due to the increase in noise level, core temperature, and no-load current).

When the voltage setting is changed, it must be remembered that the impedance voltage also changes. With our transformers conforming or similar to DIN, the indirect voltage adjustment associated with a change in induction alters the impedance voltage in approximate proportion to the percentage of increased or decreased turns.

The calculations in Example 1 are now repeated using a 5% lower tapping on the 1000 kVA transformer *(Example 2)*.

Now that Transformer 2 has the higher no-load secondary voltage, it carries the combined load current and equalizing current and therefore determines the permitted total load of the parallel units.

The equalizing current referred to Transformer 2 then becomes:

$$I_{\text{Equal Tr 2}} = I_{\text{Equal Tr 1}} \times \frac{S_{r1}}{S_{r2}}$$

Example:

$$I_{\text{Equal Tr 2}} = 28.7\,\% \times \frac{630}{1000} = 18.1\,\%$$

The load current thus permitted for Transformer 2 is

$$100\,\% - 18.1\,\% \approx 81.9\,\%$$

of the rated current. Consequently, when the load power factor is less than 0.9, the entire transformer set can be operated at approx. 81.9% of its total power of 1630 kVA, i.e. roughly 1335 kVA.

Approximately equal impedance voltages
The impedance voltages of the individual transformers should not deviate by more than ±10% from the mean value of all the transformers to be operated in parallel. If S_{r1}, S_{r2} ... S_{rp} are the rated powers of the parallel transformers, and u_{Zr1}, u_{Zr2}, ... u_{Zrp} are their impedance voltages at rated current (where the lowest subscript (1) corresponds to the lowest impedance voltage, etc.), the maximum possible total load S can be calculated using the following approximation formula:

$$S \approx S_{r1} + S_{r2} \times \frac{u_{Zr1}}{u_{Zr2}} + S_{r3} \times \frac{u_{Zr1}}{u_{Zr3}} + \\ + \ldots S_{rp} \times \frac{u_{Zr1}}{u_{Zrp}}$$

At identical rated power levels, the partial loads are inversely proportional to the impedance voltages.



The total load that is possible in practice is calculated from:

	Rated power kVA	Impedance voltage for rated current %
Transformer 1	400	3.6
Transformer 2	400	4.0
Transformer 3	400	4.4

Transformer 1 $400 \times \frac{3.6}{3.6} = 400$ kVA (100 % of S_r)

Transformer 2 $400 \times \frac{3.6}{4.0} = 360$ kVA (90 % of S_r)

Transformer 3 $400 \times \frac{3.6}{4.4} = 327$ kVA (82 % of S_r)

Total load = 1,087 kVA = 91% of theoretical total power of 3 x 400 = 1,200 kVA

Whereas Transformer 1 carries 100% load, Transformer 2 can be operated at only 90% of rated load and Transformer 3 at only 82%.

The transformer with the lower impedance voltage carries more load than the one with the higher impedance voltage.

Deviations in the impedance voltage between 10 and 20% are generally still economically acceptable if the transformer with the lower rated power has the higher impedance voltage. In the opposite case, even a 1:3 ratio of the powers of the parallel-connected transformers can result in uneconomical operation.

As a remedial measure, a parallelling reactor can be connected in series with the transformer carrying too high a load, e.g. on the low-voltage side. Its function is simply to increase the impedance voltage, and it is not suitable for limiting the short-circuit current owing to the saturation of the reactor core which occurs.

Perfectly satisfactory parallel operation is possible under the above-mentioned conditions. Under some circumstances, greater deviations in impedance voltage are permissible if operation is in parallel with the system through system impedances, and is not in parallel with the bus.

Fig. 4: Possible connections for the parallel operation of transformers with vector group numerical indices of 5 and 11

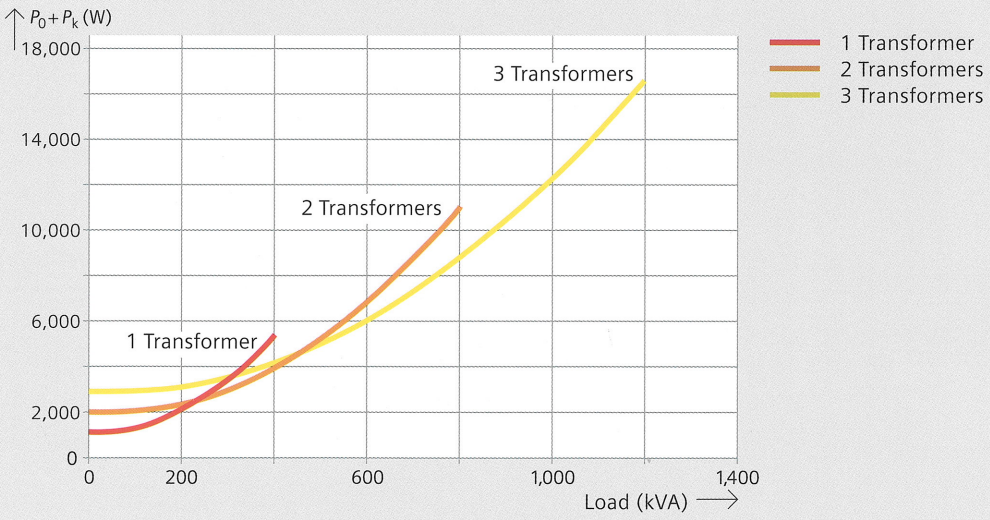

Sample calculation for three identical transformers to be connected in parallel:

Rated data

Rated power	S_r	400 kVA
No-load ratio	$\ddot{u}_r$	10/0.4 kV
Vector group		Dyn5
Rated frequency	f_r	50 Hz
No-load losses	P_0	930 W
Load losses	P_k	4,600 W
Impedance voltage at rated current	u_{Zr}	4%

with p = 2

$$n = \sqrt{\frac{2 \times 1 \times 930}{4{,}600}} = 0.64$$

$S_{Group} = 0.64 \times 400 = 256$ kVA

with p = 3

$$n = \sqrt{\frac{3 \times 2 \times 930}{4{,}600}} = 1.10$$

$S_{Group} = 1.10 \times 400 = 440$ kVA

Economics of parallel operation

When a group of several parallel-connected transformers is subjected to a time-variable load over a specified period of time, total losses can be minimized by connecting or disconnecting individual transformers. The load loss varies as the square of the load, i.e. the sum of the load loss and no-load loss when the load is distributed among several transformers can, under certain circumstances, be less than when fewer transformers are used.

In order to avoid a complicated comparison of the losses of the parallel-connected transformers, it is possible to calculate the partial load at which the switching-in of another identical transformer (the pth transformer) becomes economical as follows:

$$\text{Partial-load factor } n = \frac{\text{Partial load}}{\text{Rated power}}$$

Power of the group

$S_{Group} = n \times S_r$

S_r = Rated power of the individual transformer

The partial-load factor for the economical switching-in of another identical transformer (the pth transformer) can be calculated using the following formula:

$$n = \sqrt{\frac{p \times (p-1) \times P_0}{P_k}}$$

p = Number of transformers to be connected in parallel

Therefore, it is most economical to switch in the second transformer at 256 kVA and the third at 440 kVA, a figure precisely 10% above the rated power of one transformer. This can also be seen in *Fig. 4*.

Published by and copyright © 2012:
Siemens AG
Energy Sector
Freyeslebenstrasse 1
91058 Erlangen, Germany

Transformatorenwerk Kirchheim
Power Transmission Division
Transformers
Hegelstrasse 20
73230 Kirchheim/Teck, Germany
Phone: +49 (0) 7021 508-0
Fax: +49 (0) 7021 508-495

For more information, please contact
our Customer Support Center.
Phone: +49 180/524 70 00
Fax: +49 180/524 24 71
(Charges depending on provider)

E-mail: support.energy@siemens.com

Power Transmission Division
Order No. E50001-G640-A149-V1-4A00 | Printed in Germany |
Dispo 19201 | c4bs-No. 7481 |
TH 101-120539 | WÜ | 472902 | WS | 06121.0

Printed on elementary chlorine-free bleached paper.

All rights reserved.
Trademarks mentioned in this document
are the property of Siemens AG, its affiliates,
or their respective owners.

Subject to change without prior notice.

The information in this document contains general descriptions of the technical options available, which may not apply in all cases. The required technical options should therefore be specified in the contract.