Carrier

United Technologies

turn to the experts

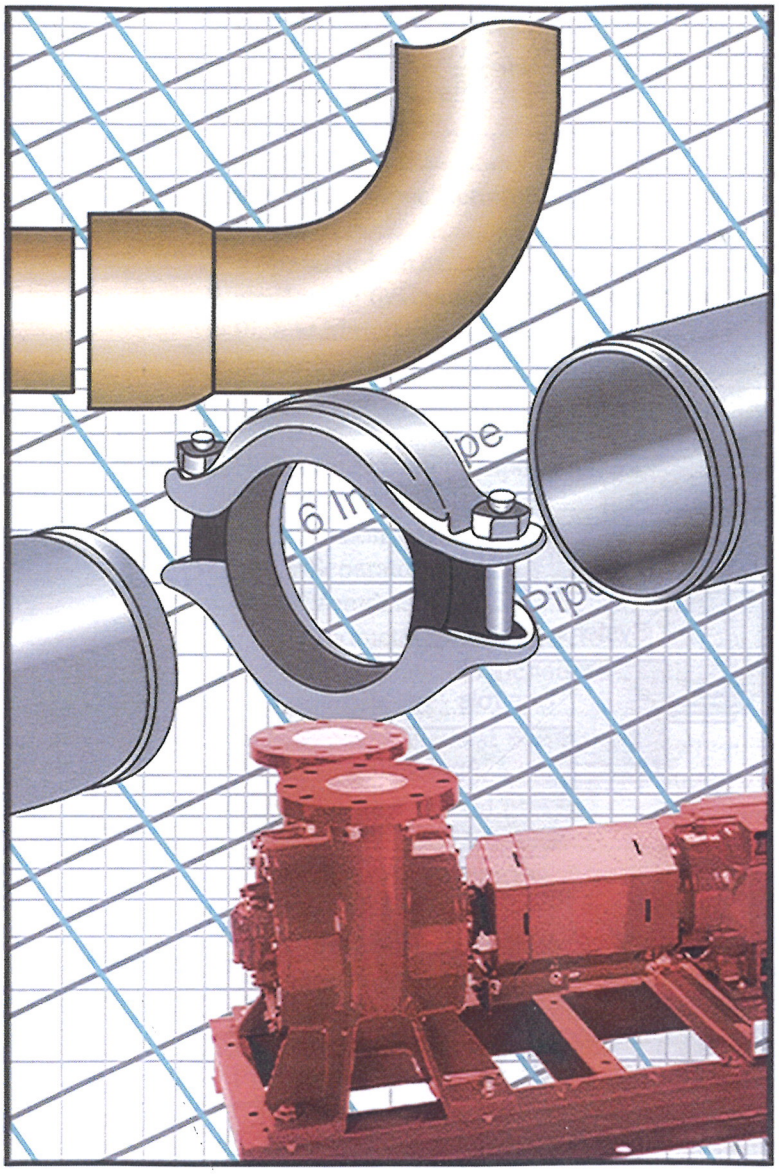

DISTRIBUTION SYSTEMS

Water Piping and Pumps

Technical Development Program

Technical Development Programs (TDP) are modules of technical training on HVAC theory, system design, equipment selection and application topics. They are targeted at engineers and designers who wish to develop their knowledge in this field to effectively design, specify, sell or apply HVAC equipment in commercial applications.

Although TDP topics have been developed as stand-alone modules, there are logical groupings of topics. The modules within each group begin at an introductory level and progress to advanced levels. The breadth of this offering allows for customization into a complete HVAC curriculum – from a complete HVAC design course at an introductory-level or to an advanced-level design course. Advanced-level modules assume prerequisite knowledge and do not review basic concepts.

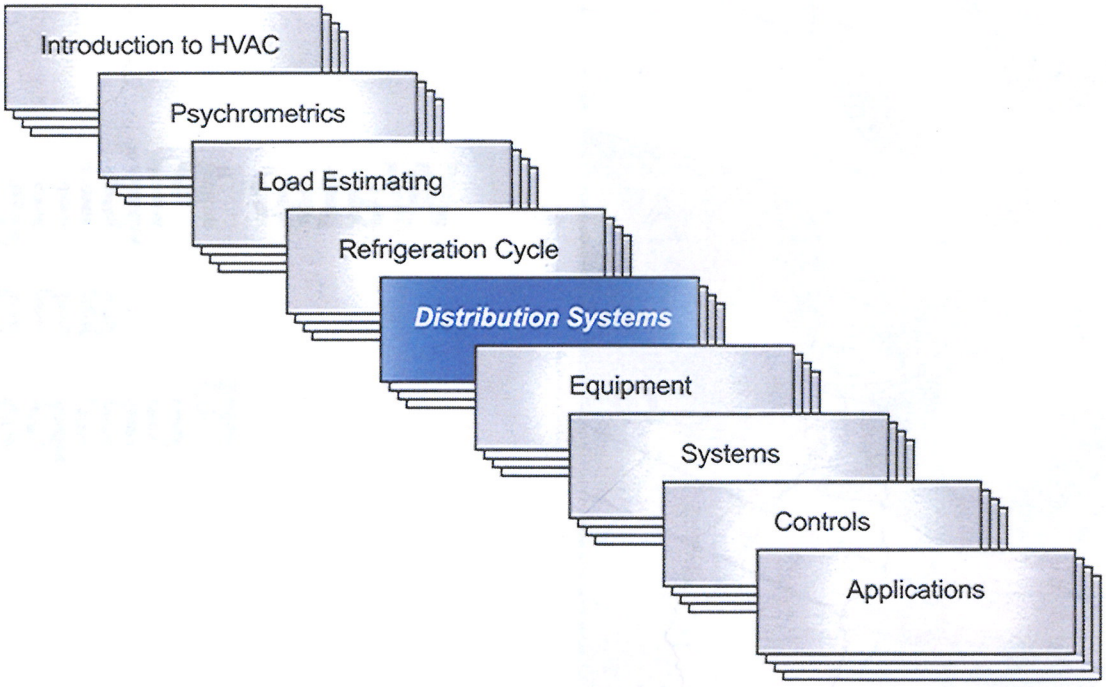

Water piping and pumping is a fundamentals topic of HVAC design. The correct layout, selection and sizing of the piping system and associated hydronic components is required to properly deliver chilled and hot water as required to maintain comfort conditions. Piping connections at various equipment are covered, along with piping arrangements for chilled water systems. Pump basics, pipe sizing, and a pump selection example complete the TDP.

© 2005 Carrier Corporation. All rights reserved.

The information in this manual is offered as a general guide for the use of industry and consulting engineers in designing systems. Judgment is required for application of this information to specific installations and design applications. Carrier is not responsible for any uses made of this information and assumes no responsibility for the performance or desirability of any resulting system design.

The information in this publication is subject to change without notice. No part of this publication may be reproduced or transmitted in any form or by any means, electronic or mechanical, for any purpose, without the express written permission of Carrier Corporation.

Printed in Syracuse, NY

CARRIER CORPORATION
Carrier Parkway
Syracuse, NY 13221, U.S.A.

Table of Contents

Introduction 1
Types of Piping Systems 1
  Closed-Loop (Evaporator) 1
  Open-Loop (Condenser) 2
  Once-Thru 2
Water Distribution Systems 3
  1-Pipe Systems 3
  2-Pipe Systems 4
  3-Pipe Systems 5
  4-Pipe Systems 6
Direct and Reverse Return Systems 7
  Direct Return 7
  Reverse Return 8
Water Piping Components and Accessories 8
  Pipe Materials 9
  Joints 9
  Fittings 10
  Valves 11
  Hydronic System Components 16
    Strainers 16
    Expansion Tanks 16
    Air Separators 18
    Air Vents 18
    Thermometers, Gauges, Pete's Plugs 19
    Pipe Hangars and Anchors 19
    Volume Tanks 20
Typical Piping Details at Equipment 21
  Chillers 21
  AHU Coil or Fan Coil 22
  Pumps 22
System Piping Arrangements 23
  Parallel and Series Chiller Evaporators 23
  Single Water-Cooled Chiller Loop 24
  Multiple Water-Cooled Chiller Loop with Dedicated Pumps 24
  Multiple Water-Cooled Chillers with Manifolded Pumps 25
  Primary-Secondary Chilled Water System 25
  Primary-Only, Variable-Flow Chilled Water System 26
  Chiller Head Pressure Control 27
    Head Pressure Control Piping Methods with Diverting Valve 28
    Head Pressure Control Piping Method with VFD or Modulating Valve 29
Pump Basics and Types of Pumps 29
  Pump Curve 32
  Selection 35
  Centrifugal Pump Types 36

Pipe Sizing and Pump Selection Example 37
Step 1: Determine Water Velocity in Piping 37
Step 2: Determining Piping Friction Losses 37
Step 3: Gather Job Specific Component Pressure Drops and Design Data 38
Step 4: Review the Highest Pressure Drop Circuit and Calculate Water Flows 39
Step 5: Size the Pipe; Find the Friction Rate/100 ft 40
Step 6: Find the Longest Circuit Pressure Drop 41
Step 7: Sum All the Pressure Drops for Pump Selection 42
Step 8: Size the Chilled Water Loop 43
Step 9: Check Evaporator Loop Volume 45
Piping System Calculator Tool 46
Summary 46
Work Session 47
Appendix 49
References 49
Charts and Tables 49
Chart 1 – Friction Loss for Closed Loop 50
Chart 2 – Friction Loss for Open Loop 51
Chart 3 – Friction Loss for Closed and Open Copper Tubing System 52
Table 4 – Physical Properties of Steel Pipe 53
Table 5 – Friction Loss of Valves in Equivalent Length of Straight Pipe 54
Table 6 – Friction Loss of Pipe Fittings in Equivalent Feet of Straight Pipe 55
Table 7 – Special Fitting Losses in Equivalent Feet of Straight Pipe 56
Table 8 – Control Valves and Strainer Losses in Equivalent Feet of Straight Pipe 57
Work Session Answers 58

Introduction

In this TDP module we will cover major topics associated with chilled water piping, and to a limited extent, hot water piping. We will discuss the three types of piping systems and the four basic piping distribution designs used to supply and return water to HVAC hydronic equipment.

There are important components and accessories that are required to complete a water piping system. These include valves, tanks, and air eliminators. We will examine these system components and define their role in the total hydronic system.

After examining some typical piping hook-ups to commercial HVAC equipment, we will diagram and discuss popular piping arrangements, such as primary secondary and primary variable flow. We will then discuss a popular pipe-sizing tool from a noted pump manufacturer that streamlines the sizing process. We will also examine types of water pumps used in HVAC systems and their characteristics and applications.

Upon completion of this TDP, the reader should feel comfortable identifying, selecting, and applying the major components of water piping systems.

smaller sys use → If put somewhere else, need use enclose tank. pressure > than pressure @ pipe @ tat pt. but ex.

Purging of Air @ top.

Types of Piping Systems

(Min specific vol @ 4°C)

Before piping design can be discussed in detail, you must first have an understanding of the three basic types of piping systems: closed-loop, open-loop, and once-thru.

Closed-Loop (Evaporator)

In a closed-loop piping system, the water is contained within a closed piping system, or loop, through which it circulates. While there may be some nominal contact with the air depending on the type of tank used, the system is considered closed to the environment. Typically, closed-loop systems are chemically treated to control corrosion, scale, slime, and algae within the piping but their chemical treatment requirements typically are not as extensive as an open-loop.

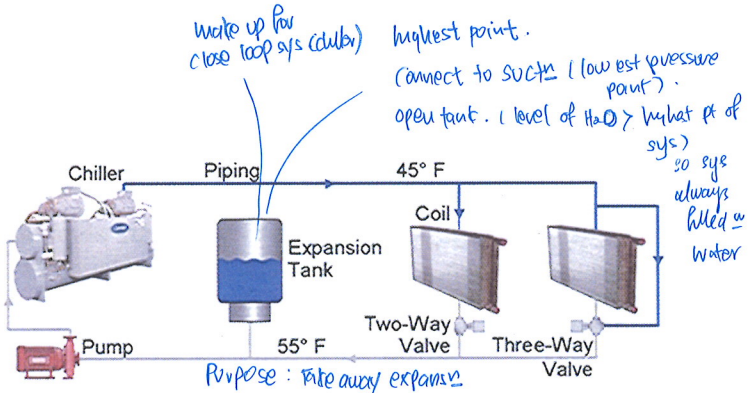

wake up for close loop sys (clubs) highest point. connect to suction (lowest pressure part). open tank. (level of H_2O > highest pt of sys) so sys always filled w water

Purpose: take away expansion pressure.

Includes:

- A chiller and/or a boiler - water (1% of sys H_2O)
- Coils that produce cooling or heating
- Two or three-way valves to control the coils
- Piping and pump to circulate water
- An expansion tank (insignificant water contact with air)

Pipe r completely filled w water. If not Air-lock

Figure 1

Example of a Closed-Loop Piping System

expans valve @ return so wont affect

Open-Loop (Condenser)

In an open-loop piping system, the water is in constant contact with the air and the system is therefore open to the atmosphere. A typical example of an open-loop system is a recirculating condenser water system with a cooling tower where the water is circulated through the cooling tower, sprayed over the tower media surface, collected into the tower basin, circulated through the condenser, and then sent back through the cooling tower.

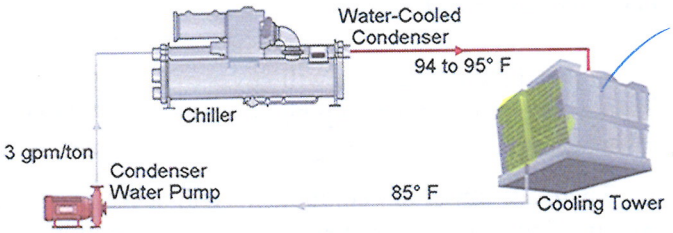

- The water-cooled condenser is typically part of a water-cooled chiller or water-cooled package unit
- A cooling tower rejects the condenser heat to the atmosphere
- Flow rates and temperatures are industry standards for North America
- Piping and pumps circulate water
- Water is reused and exposed to the ambient conditions in the cooling tower

Figure 2

Example of an Open-Loop Recirculating System

Once-Thru

In this type of system, water passes through the system once and is then discharged. An example of a once-thru system would be a chiller with river water piped into its water-cooled condenser. The rejected heat from the condenser is introduced back into the river, which is not always acceptable from an environmental perspective. In general, once-thru systems that use "city" water are not allowed because they use excessive amounts of water.

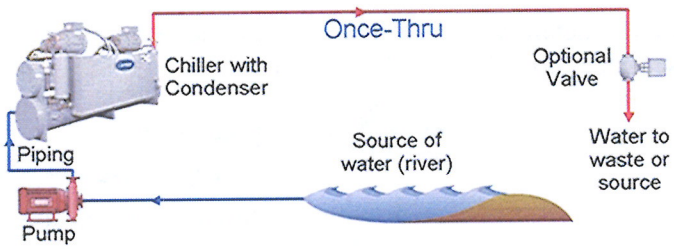

- Much less common due to environmental concerns
- Water is sent to waste or returned back to source
- Large consumption of water
- Source example: river, lake, well

Figure 3

Example of a Once-Thru System

Pipe-sizing methods

are virtually the same for all three types of systems, however there are differences in friction loss due to expected corrosion rates in the pipes. Hence pipe-sizing charts differ between open and closed-loop systems. A once-thru system is considered an open-loop system, but typically does not get any chemical treatment like an open system does. But because river water may have more contaminants, the open-loop tables should be used, and may be conservative.

Water Distribution Systems

There are four main types of water distribution systems. They are defined by the number of pipes used in the system – 1-pipe, 2-pipe, 3-pipe, and 4-pipe. While this TDP will discuss primarily chilled water and condenser water system piping system design, it is important to understand the evolution from 1-pipe into the other three systems, all of which are used for heating as well as cooling.

1-Pipe Systems

A 1-pipe water distribution system is a system that has a one main pipe looping around the building and then returning.

1-Pipe System Uses

Since 1-pipe systems are typically only used for heating, the supply and return are shown connecting to a boiler instead of a chiller.

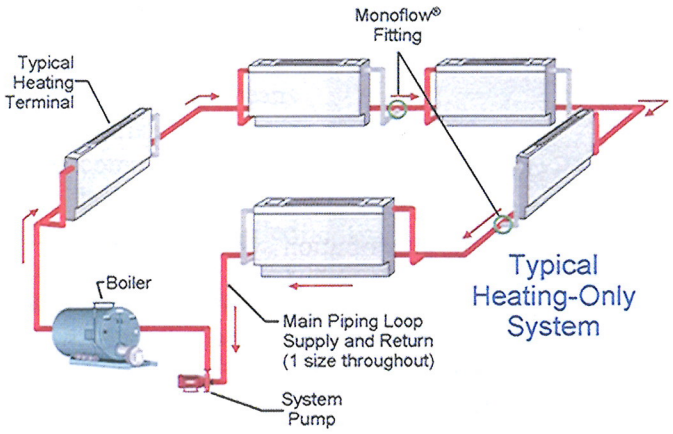

Figure 4

1-Pipe Distribution System

This pipe is both the supply and return main. Its size is constant throughout, and all of the water in the system flows through it feeding one or more zone heating terminals.

A small amount of water is induced to leave the main at each riser by the use of a special flow fitting used on 1-pipe systems, sometimes referred to as a "monoflow" fitting. These fittings create a pressure drop in the main equal to or greater than the pressure drop through the riser, runout, zone terminal unit, and return piping.

Control of flow rate to the zone terminal units in a 1-pipe system is often difficult to achieve. The pressure drop from the point where water leaves the main to where it returns is small and small changes in resistance in this line result in large changes in flow rate. As a result, many 1-pipe systems avoid flow rate control at the zone terminals and achieve capacity control by regulating airflow over the zone terminals instead.

History of 1-Pipe Systems

The 1-pipe system has been used for many years in residential and smaller commercial buildings. It has been used as a hot water distribution system and seldom, if ever, for the distribution of chilled water.

Some advantages of the 1-pipe system include the simple design of the system that requires one pipe size. This simplicity of design leads to easy installation and low installed cost.

However, 1-pipe systems have several disadvantages. The pumping head is generally higher than that in other systems because of the resistances occurring in series. That means the pump and pump energy is larger than other distribution systems of comparable size.

The change in water temperature as the water moves through the system (the water gets colder after each successive terminal because of mixing) creates the possible need of larger units at the end of the main, which will complicate the selection of the zone terminal units and add cost due to oversized units near the end. Also, at part load, the end unit may be over or under capacity.

In order to keep the pressure loss through the unit coils low, the water velocity through the coils must be kept low. This results in coils with large tube diameter, a greater number of tubes in parallel, or larger coils than used with other distribution systems. Therefore, a physical space and terminal cost penalty exist when a 1-pipe system is used.

The 1-pipe system is poorly suited to chilled water distribution for several reasons. The water quantity used in chilled-water systems is usually considerably higher than that used for heating because the unit coils work on smaller temperature differentials in the cooling mode than in the heating mode. In order to economically accommodate higher flow rate, zone terminals used for chilled water would need to be redesigned so they are not prohibitively large, expensive, or space-consuming.

2-Pipe Systems

The 2-pipe water distribution system is used with both heating and cooling equipment containing water coils. It is equally useful for room fan coil units and medium or large central air handlers using combination hot water and chilled water coils. The 2-pipe system can be used to distribute either hot or cold water, or alternate between the two. The same piping is used for both heating and cooling so there must be a definite outdoor temperature, which is called the "changeover temperature," or some other indicator of building load, at which point the hot water in the piping is replaced by the chilled water and vice versa.

Some 2-pipe fan coil units are equipped with electric heat in addition to the heating capability of the hot water coil. This "touch up" electric heat can be used if heating is required for a fan coil but the system is still not changed over to the heating mode.

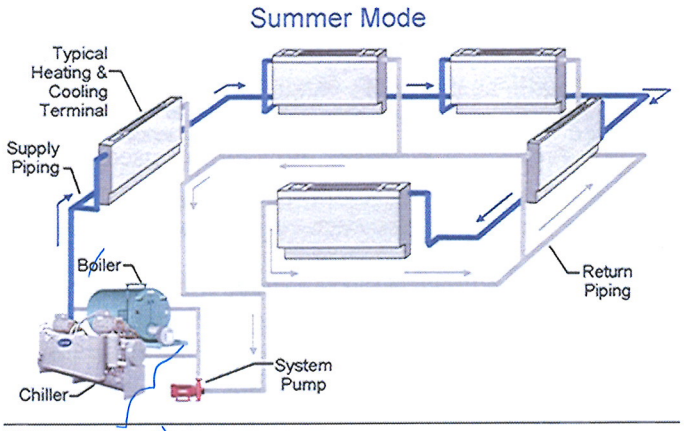

Figure 5

2-Pipe Reverse Return Distribution System

2-pipe system changeover

takes time and normally is done seasonally.

There are two forms of 2-pipe water distribution systems in common use: 2-pipe direct return and 2-pipe reverse return. Direct and reverse return will be covered later.

In a 1-pipe system, the supply and return main is the same pipe. The quantity of water flowing through the main is approximately constant and the main is built of one diameter pipe throughout its length. On the other hand, in the 2-pipe system, the supply and return mains are separate pipes and water leaving the supply main goes into the return main. As water leaves the

supply main and goes through the terminal units, the quantity of water flowing in the main is reduced, so the pipe diameter can be reduced. The opposite is true for the return main, which starts out small at the furthest terminal and has to be increased in size as water enters it.

Advantages of 2-pipe systems include the fact that a higher friction loss can be taken in both the piping and the zone terminal units and still have a total pumping head lower than that in the same size 1-pipe system because the zone terminals are in parallel water circuits, not series. Also, it is easier to balance the flow to each unit in this system than in the 1-pipe system, assuming branch balancing valves are installed in the piping as the system is installed. Another advantage of 2-pipe systems is that the water temperature entering each zone terminal will be the same in temperature because the return water from each terminal unit does not mix with the supply water in the supply main.

However, the installed cost is greater than that for a 1-pipe system. In systems of the same size, even though the average pipe diameter in the 2-pipe system is smaller than that in the 1-pipe system, the extra pipe and greater number of fittings means that this system will have a greater first cost. Like the 1-pipe system, the 2-pipe system distributes only a common temperature fluid to the zone terminals. Because the system cannot deliver hot water or chilled water simultaneously to the coils, it must be in either the heating or cooling mode. To change over from heating to cooling, the water in the mains must be completely circulated through the chiller and back to the unit before any cooling is available at the zones. Changeover takes time. It is not practical to plan to change over frequently. Seasonal changeover is the most common method used. Two-pipe supplemental heating systems are also quite common, both for separate perimeter heating and zone reheat at the terminals.

Pumping head

refers to the total pressure drop in ft wg that the water pump(s) must overcome to circulate the water through the system. Lower head results in lower pump energy consumption.

Cooling to Heating

When a 2-pipe system is changed over from cooling to heating or vice versa, it is important that the water introduced is not too hot or too cold. This would cause thermal shock to the boiler or the chiller.

3-Pipe Systems

The 3-pipe water distribution system has two supply mains feeding each zone terminal, one for chilled water and one for hot water, and a common return main. The chilled water supply and hot water supply lines are sized according to normal standards and the return is sized to handle the maximum flow rate (which is the cooling flow rate). As with 2-pipe systems, the return main can be either direct return or reverse return configuration.

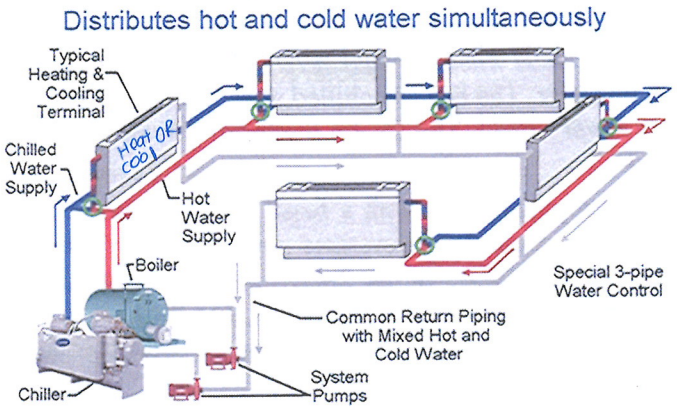

Figure 6

3-Pipe Distribution System

Because of the two supply mains to each zone terminal, there is always hot and cold water present at the entrance to the zone coil ready to be used when needed. This gives any fan coil or air handler supplied by the 3-pipe water distribution system the ability to heat or cool at any time. No changeover from summer to winter cycle is needed in the 3-pipe system.

However, the operating cost of this system can become prohibitively high because of the mixing of hot and cold return water. It is important to be familiar with 3-pipe systems because they have been installed in existing buildings and are still in use.

ASHRAE 90.1

ASHRAE 90.1 does not allow for the use of 3-pipe systems because of the mixing of hot and cold water in the common return pipe uses excess energy.

4-Pipe Systems (best)

The 4-pipe water distribution system is actually two, 2-pipe systems in parallel; each system consisting of its own supply and return main. One system is always distributing chilled water to the units and returning it to the chiller. The other is distributing hot water to the units and returning the water to the boiler. Unlike the 3-pipe system, there is no mixing of hot and cold water. By using two separate coils in each zone terminal unit, or one coil with a separate cooling and heating circuit, the heating and cooling systems are completely separated. The chilled water flows through a cooling coil and the hot water flows through a separate heating coil. At no point are the two circuits connected. In a 4-pipe water distribution system, each terminal unit can become a separate zone of control, with its own thermostat. Both hot and cold water are available to all units at one time.

Distributes hot and cold water simultaneously

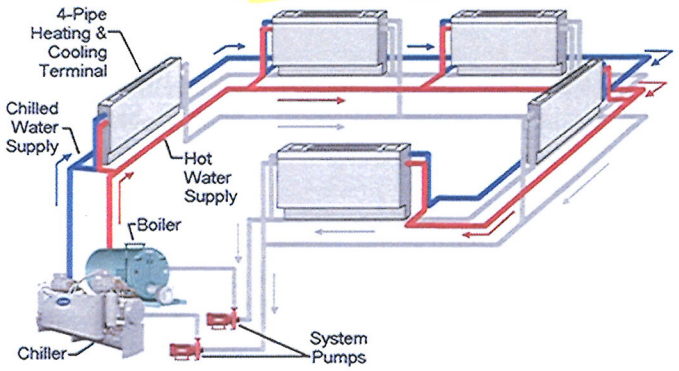

Figure 7

4-Pipe Distribution System

Boiler can be replaced by Heat machine Hot H2O

Four-pipe distribution systems are actually two 2-pipe systems in parallel. This system offers both hot and chilled water to all zones simultaneously, enabling the system to meet cooling and heating loads whenever and wherever they occur. There is no need for seasonal or more frequent changeover. The hot and chilled water circuits are completely separate and the two water streams are never mixed. The design methods, valves, and controls are similar to 2-pipe and 3-pipe systems.

A 4-pipe system with a fossil fuel-fired boiler can deliver a competitive or lower operating cost than some 2-pipe systems with "touch-up" electric heat built into the unit. That is because the electric heaters in the 2-pipe unit must sometimes operate more often than is expected and electric resistance heat is expensive, and the heaters may require a larger building electric service. This operation occurs prior to the entire system changeover to heating. Fossil fuel rates typically offer an advantage to electric rates.

However, 4-pipe systems have a higher installed price than 2-pipe and most 3-pipe systems. The extra pipe and valves at the zone terminals tend to make the 4-pipe system the most costly in terms of installed cost. Four-pipe systems also require terminal units with dual coils or a 2-circuit coil, which costs more. Also, there are four pipes to run throughout the building, which takes more time and consumes more space for piping than the other systems.

For commercial buildings, the choice comes down to 2-pipe versus 4-pipe designs. The comfort and control advantage of 4-pipe over 2-pipe must be weighed against the higher installed cost of the 4-pipe system. Where the building configuration and layout of spaces may require long periods of both heating and cooling simultaneously, and occupant comfort is a requirement, 4-pipe makes the most sense. When the building lends itself to a seasonal changeover without large compromises in comfort, 2-pipe is suitable.

Direct and Reverse Return Systems

Closed-loop systems can be further classified as direct return or reverse return.

Direct Return

The direct return system allows piping to be run in the most direct path to optimize piping costs. The disadvantage is that the flow at each fan coil unit or air handler usually needs to be balanced using a balancing valve. The length of the water circuit through the supply and return piping to each fan coil or air handler is different in direct return piping. Fan coils close to the pump receive greater flow rate than those further away unless balancing is accomplished.

Open-loop systems such as the condenser water system discussed earlier with a cooling tower are always direct return since individual terminals don't exist and balancing is relatively simple.

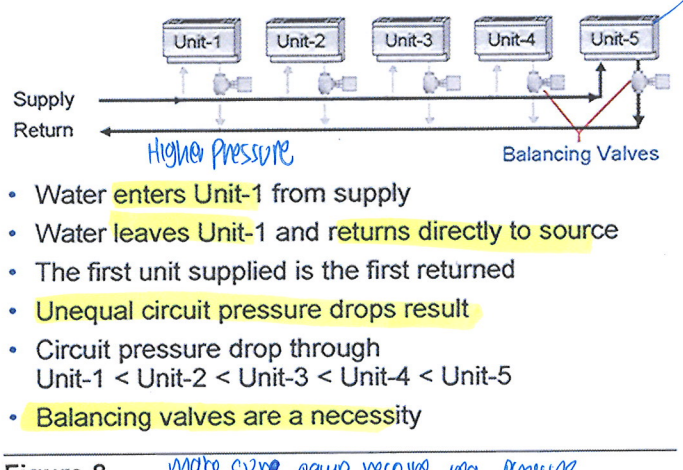

Figure 8

Direct Return Horizontal System Layout

Reverse Return

The reverse return system is piped so that the length of the water circuit through the supply and return piping to each fan coil or air handler is essentially the same. Therefore, pressure drops are basically equal. Buildings such as hotels with multiple identical fan coil units with identical flows are excellent candidates for reverse return systems.

Reverse return has greater pipe lengths and cost. However, the cost of adding a balancing valve for each fan coil using a direct return system could offset the additional costs of the added reverse return piping.

If the individual fan coil or air-handling unit water pressure drops are not reasonably close to each other, engineers will often specify balancing valves anyway, regardless of the piping arrangement.

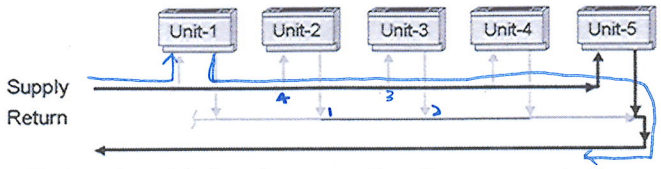

- Return header flow is same direction as supply flow
- Water leaves Unit-1 and goes all the way around in returning to source
- The first unit supplied is the last returned
- Circuit pressure drop through Unit-1 = Unit-2 = Unit-3 = Unit-4 = Unit-5
- Balancing valves may be eliminated

Figure 9

Reverse Return Horizontal System Layout

Arrangement of units impt (extra piping) (Ring)

Water Piping Components and Accessories

Operating cost lesser (no B.V)

There are many, varied, components that make up all water, and air-water systems. Pipe, fittings, valves, strainers, pumps, chillers, air-handling units, cooling towers, expansion tanks, air separators, Pete's plugs, thermometers, gauges, air vents, pipe supports, and possibly a volume tank are all included. Following are descriptions of hydronic components that are used in chilled water piping systems.

• Power 2
• 10% in P drop. impact is 5%.

Pipe Materials

Typically the piping used in an HVAC system is either schedule 40 black steel welded or cut-grooved pipe, or lighter gauge rolled-groove steel pipe for sizes 2-1/2-in. diameter and above. Type L copper or threaded schedule 40 black steel pipe is normally used for 2-in. diameter and smaller. In some closed-loop water source heat pump applications, schedule 40 PVC piping has been used where local codes and inspectors permit. If PVC is used on the exterior of a building it should be protected from the elements with insulation so that the piping does not deteriorate from extended exposure.

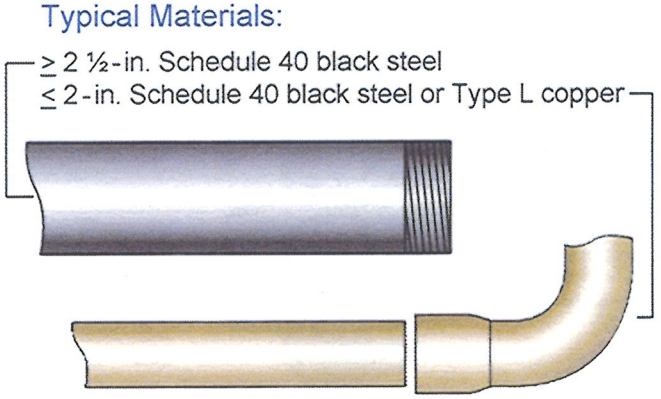

Figure 10

Materials Used for Water Piping

Use of PVC Piping

Schedule 40 PVC is sometimes used on the interior of the building where codes allow or, in some climates, on the exterior as a means to reduce cost.

Joints

Steel pipe is offered with weld, mechanical groove or threaded connections. Copper pipe is offered with solder or mechanical rolled-groove connections. PVC pipe is offered with solvent or mechanical grooved connections.

Weld-joint pipe has beveled ends so that when two pieces are butted together they form a groove for welding.

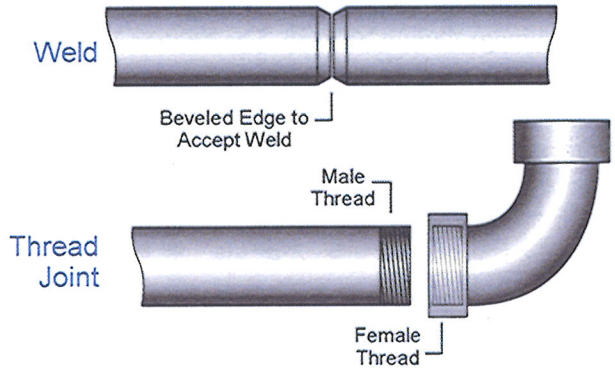

Figure 11

Weld and Threaded Joint

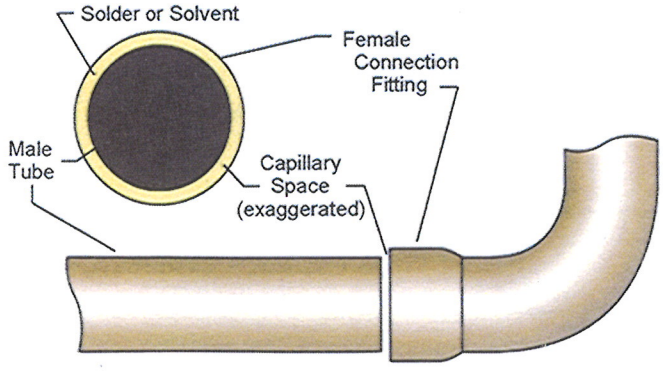

Figure 12

Sweat or Solvent Joint

The threaded joint design has male tapered threads at the end of the pipe that screw into the female thread of a fitting.

Solder (sweat) joints and solvent joints are formed by one end that slips inside the other; solder or glue is used to seal the joint.

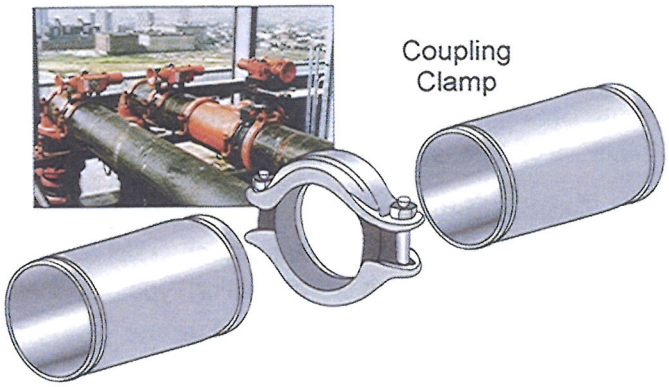

Figure 13

Mechanical (Groove) Joint
Actual photo courtesy of Victaulic Company

Mechanical groove joints have a groove that is cut or rolled into the end of the pipe and fitting. The joint is then completed with a mechanical coupling that locks into the grooves. Each coupling has a rubber gasket that seals the joint.

Grooved Joints

Large equipment like centrifugal chillers are often available with a choice of either weld stub-outs or groove stub-outs factory-installed for the chilled water and the condenser water connections.

Fittings

Numerous fittings are available such as 90 and 45-degree elbows, tees, concentric reducers, eccentric reducers, flanges, etc. Fittings that allow for the least pressure drop, best routing and proper drainage should be used. The friction loss that best represents the type of fittings for a specific project (standard radius elbow versus long radius elbow for instance) can be most easily found in the Fitting Equivalent Length Pressure Drop Charts in the Appendix when calculating total system pressure drop.

Equivalent lengths for unusual fittings not covered in the Tables will have to be determined by consulting with the manufacturer.

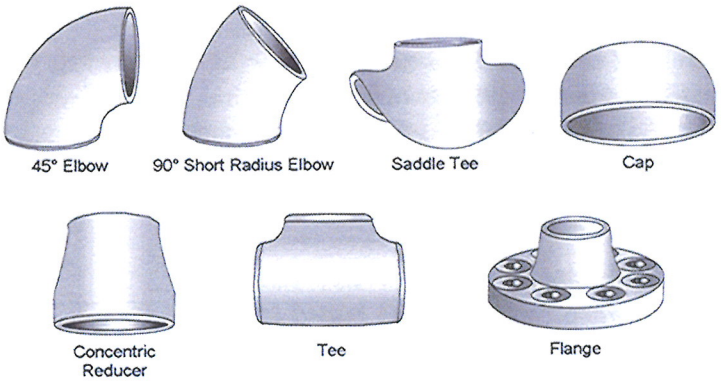

Figure 14

Example of Various Pipe Weld Fittings

Valves

Many types of valves are available in the HVAC industry. Each type of valve has certain characteristics that make it better for certain applications such as shutoff, balancing, control (also referred to as "throttling"), or one-way flow. Some valves are suitable for multiple applications. A brief description of the different types of valves and their applications are listed below.

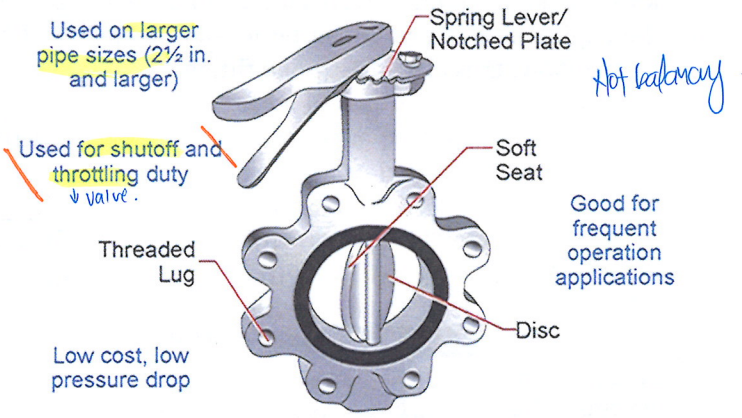

Figure 15
Butterfly Valves, Lug Pattern

Butterfly valves are generally found on larger sized systems and are used for shutoff duty, throttling duty and where there is frequent operation. They have good flow control (linear relationship between percent open and percent of full flow through the valve), low cost, high capacity and low pressure drop. They typically have bigger valves and are used on pipe sizes 2 ½-in. and larger. Lug-pattern will either through-bolt between two flanges, or be secured at the end of a pipe section, while a wafer-pattern is a more economical style that just sits between the bolted flanges without its own lugs.

Gate valves, also known as "stop valves," are designed for shutoff duty. When the valve is in the wide-open position, the gate is completely out of the fluid stream, thus providing straight through flow and a very low pressure drop. Gate valves should not be used for throttling. They are not designed for this type of service and consequently it is difficult to control fluid flow with any degree of accuracy. Vibration and chattering of the disc occurs when the valve is used for throttling, resulting in damage to the seating surface. The flow rate arrows in the figure indicate that a gate valve can be installed without regard to direction of flow within the pipe; they can seat in either direction. The globe valves shown next need to seat against the flow, which is why there is only one flow direction arrow on the figure.

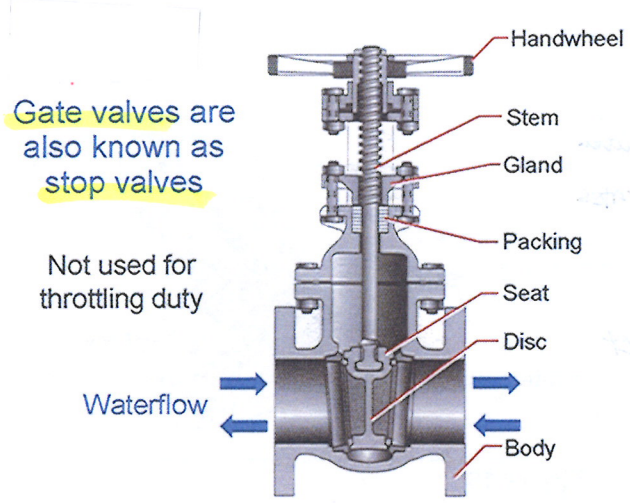

Figure 16
Gate Valve

Globe, angle, and "Y" valves are of the same basic design and are designed primarily for throttling (balancing) duty. The angle or Y-pattern valve is recommended for full flow service since it has a substantially lower pressure drop at this condition than the globe valve. Another advantage of the angle valve is that it can be located to replace an elbow, thus eliminating one fitting.

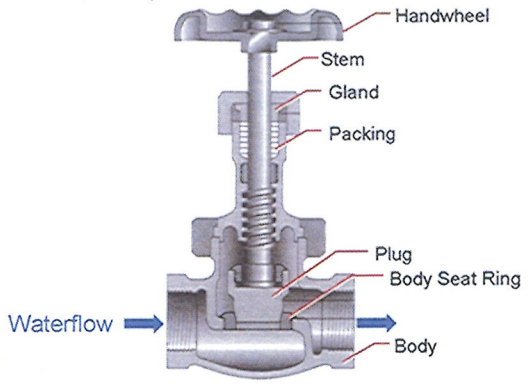

Figure 17

Globe Valve

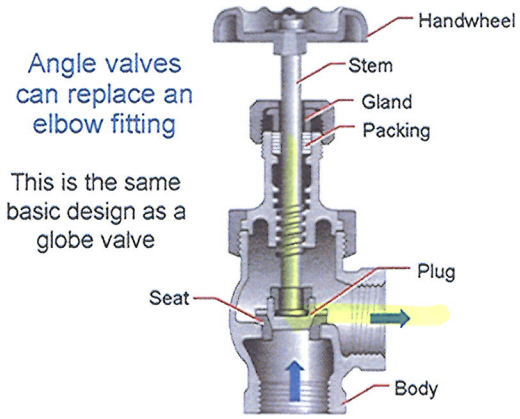

Figure 18

Angle Globe Valve

Globe, angle and Y valves can be opened or closed substantially faster than a gate valve because of the shorter lift of the disc. When valves are to be operated frequently, the globe design provides the more convenient operation. The seating surfaces of the globe, angle or Y valves are subject to less wear and the plug and seat are easy to replace compared to the gate valve discussed previously.

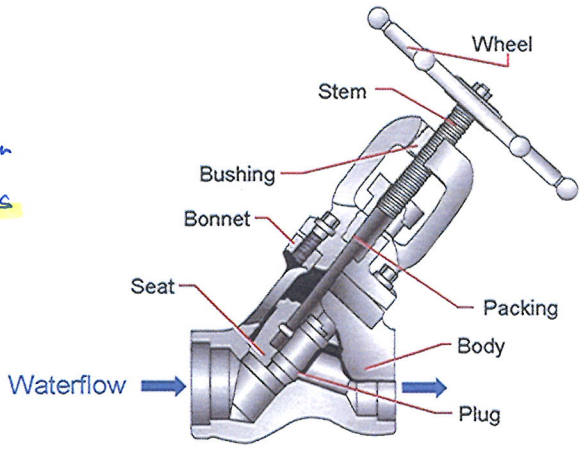

Figure 19

Y-Globe Valve

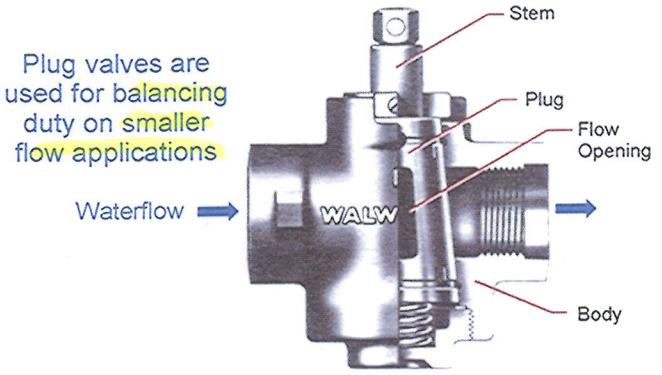

Figure 20

Plug Valve (Balancing) 1 time setting.

Plug valves, also called plug cocks, are primarily used for balancing flow rates in systems not subject to frequent flow changes. They come with cylindrical or tapered plugs that are usually lubricated to reduce galling, turning torque, and face leakage. Plug valves have approximately the same loss as a gate valve when in the fully open position. When partially closed for balancing, this line loss increases substantially. For large flow rate applications, a globe or butterfly will be used instead of a plug valve. Their sizes are limited to smaller applications because of cost.

Ball valves are used for full open/closed service, with limited requirement for precise control. They are best suited for quick-open linear control. Their advantage is low cost, high capacity, low leakage, and tight sealing.

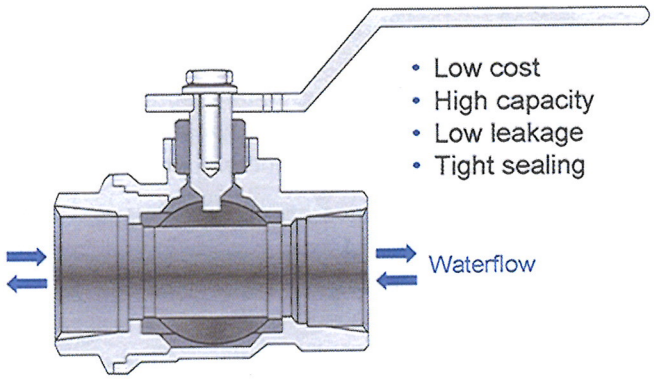

Figure 21

Ball Valve (open/close)

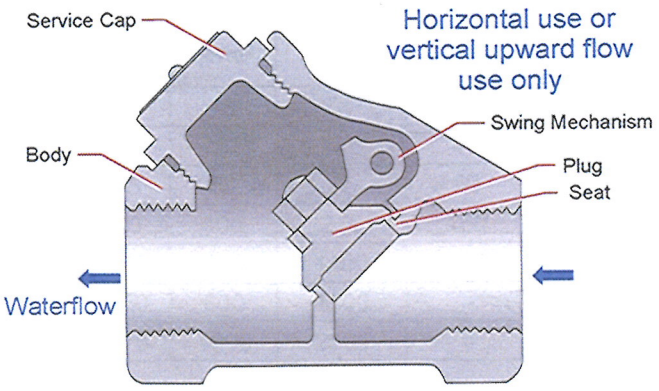

Figure 22

Swing Check Valve Pumps! (1 direction)

Check valves prevent the flow of water in the reverse direction. There are two basic designs of check valves, the swing check and the lift check. The swing check valve may be used in a horizontal line or in a vertical line if flow is upward. The flow through the swing check is in a straight line and without restriction at the seat. Swing checks are generally used in combination with gate valves.

The lift check operates in a manner similar to that of a globe valve and, like the globe valve, its flow is restricted. The disc is seated by backflow or by gravity when there is no flow, and is free to rise and fall, depending on the pressure under it. The lift check should only be installed in horizontal piping and usually is used in combination with globe, angle and Y valves.

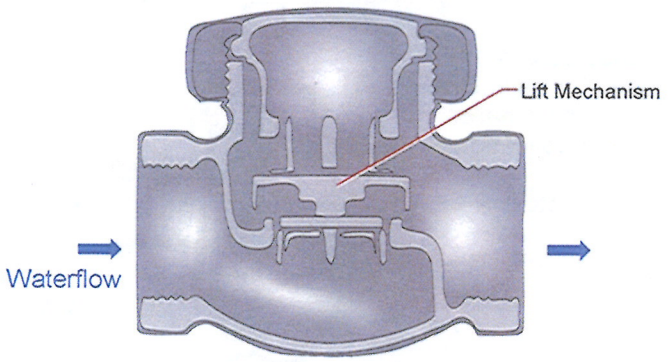

Figure 23

Lift Check Valve

Control Valves: 3-Way and 2-Way

Control valves can be 2-position (open or closed), 2-way modulating (modulates to vary flow through the coil and system), or 3-way modulating (modulates flow through the coil by bypassing water back to the return thereby maintaining a nearly constant flow through the system). Three-way valves are used for hot and cold water flow control on chillers, boilers, air coils, and most all HVAC hydronic units where temperature control is necessary.

Three-way mixing valves have two inlets and one outlet. Three-way diverting valves have one inlet and two outlets. Mixing valves are typically used to vary the flow through a load (such as a chilled or hot water coil). Diverting valves are used to direct the flow one way or another and are useful in applications like 2-pipe changeover or in bypass applications.

Three-way valves are used in many applications such as flow rate variation, temperature variation, and primary-secondary pumping systems in both 2-pipe and 4-pipe systems.

Two-way modulating valves are used for variable flow through heating and cooling coils. They throttle the flow for part-load control instead of bypassing the flow around the coil.

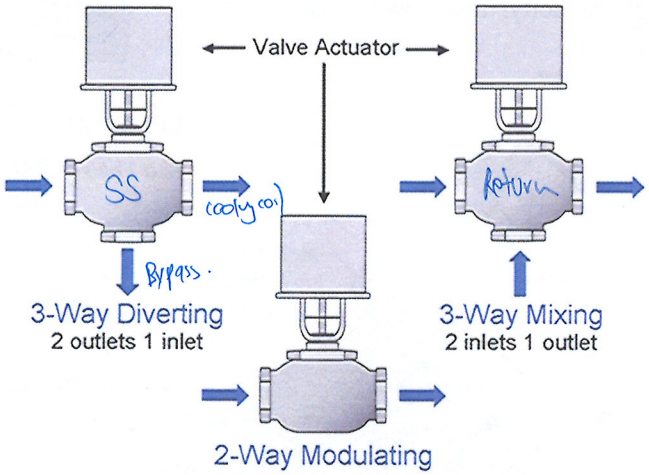

Figure 24

Control Valve Types

2 way - either same
3 way. use e return.

Circuit Setters™ are valves that allow for preset balancing as in direct return system. The manufacturer's application information should be used when using circuit setters in a design.

The Circuit Setter™ balance valve is designed specifically for pre-set proportional system balance. This valve assures optimum system flow balance at minimum operating horse-power. A Circuit Setter™ is a popular three-function valve providing flow balance, flow metering, and shutoff.



Figure 25

Circuit Setter
Photo courtesy of Bell & Gossett

A Triple Duty Valve™ is often used on the discharge of the pump to replace an individual shut off valve, balancing valve and check valve. Triple duty valves are used to save cost of material and labor.

Determining which valve to use is a matter of choice, based on the application and cost.

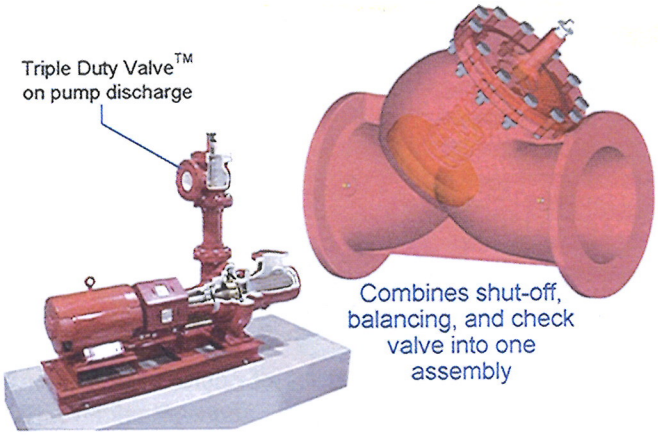

Figure 26

Triple Duty Valve
Photo courtesy of Bell & Gossett

Relative Valve Comparison Chart $

Size	Ball[1]	Gate[2]	Globe[2]	Swing Check[1]	Wafer Butterfly[3]	Lug Butterfly[3]
¼	6	40	50	40	–	–
½	6	30	50	40	–	–
1	15	50	75	60	–	–
2	40	100	215	150	100	120
3	210	310	1100	500	120	140
4	250	600	1300	–	140	160
6	375	1000	2500	–	220	260

Notes:
1. All sizes threaded bronze body
2. Sizes ¼ to 2-in. threaded bronze body; sizes 3 to 6-in. threaded iron body
3. All sizes cast iron body

Figure 27

Comparison of Valve Costs

Hydronic System Components

Strainers

The typical strainer used in the HVAC industry is a "Y" strainer. The strainer (minimum 20 mesh) is used to prevent construction debris from entering the equipment during initial startup and to catch any small debris that may be circulating through the system during normal operation or servicing. Strainers are normally installed on the inlet side of a chiller as well as the suction side of a pump. In some rare cases, strainers are also installed at the inlet of chilled water coils.

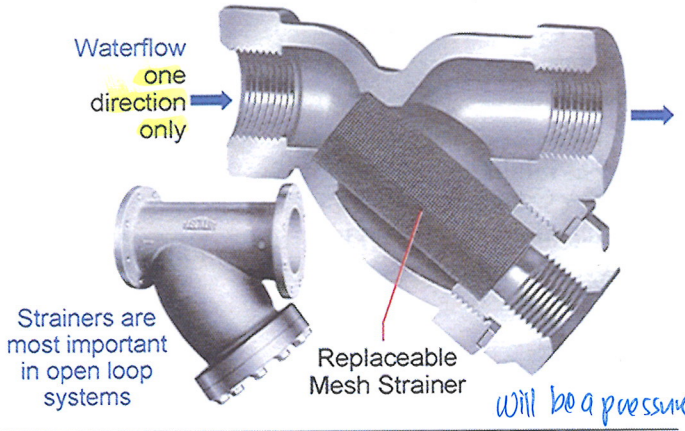

Will be a pressure drop

Figure 28

"Y" Strainer
Photo courtesy of Flexicraft Industries

Strainers

are very important in open-loop systems and once-through systems since debris can enter the system at any time. They are also important to use on packaged units that use a brazed plate, or tube-in-tube heat exchanger because the small water passages should be kept clean.

Systems with large quantities of debris may use a "basket" strainer in lieu of a "Y" strainer. The basket strainer has two baskets and a transfer valve that allows flow to be changed from one basket to the other. This allows for one basket to be cleaned while the other is in use. A basket strainer is expensive and is used sometimes for extra straining of condenser water systems on water-cooled chillers.

Expansion Tanks

Not req'd in open sys

Temperature changes cause the water to expand or contract within a closed-loop system. As the temperature increases, the water occupies a larger volume of space. An expansion tank is sized to handle the excess water that is a result of temperature change and water expansion and should be part of every closed-loop system, chilled water, condenser water, or hot water. Expansion tanks are not required in open systems like a cooling tower water loop.

An expansion tank also provides a make-up location for automatic replacement of water to the system that has been lost due to various reasons such as, leakage through pump glands or servicing. Expansion tanks are available as an open tank, or a closed type tank. A diaphragm tank is a closed tank with an internal diaphragm that separates the water and air and is in the closed tank category. The open tank is just that, a tank that is open to the atmosphere.

Bladder Tanks

The most commonly used tank is the bladder tank since it can be installed at any convenient point in the system and is usually most cost effective.

The variation of water volume caused by temperature changes can be calculated by determining the total water volume in the system and then multiplying the volume by the change in specific volume of water between the highest and lowest temperatures expected.

Bladder tanks are another type of closed tank and cost more per gallon than diaphragm tanks, but bladder tanks have a larger "acceptance volume" (the actual amount of water the tank can hold) than diaphragm; so for the particular application, the cost difference can be negligible.

The liner (bladder) is replaceable, whereas the membrane for the diaphragm tank is not. The diaphragm membrane can be a wear point due to expansion/contraction. Bladder tanks have an acceptance volume of approximately 95 percent, which means if the system expansion were calculated to be 200 gallons, the actual tank size required would be approximately 210 gallons.

Volume of Expansion Tanks

Practically speaking, the change in water system volume is usually about 1 percent for chilled-water systems and about 3-4 percent for normal hot water systems. This volume, however, is not the volume of the expansion tank. It represents the expansion volume of the system.

To size an expansion tank you will need to know the total gallons of water in the system, temperature of the water when the system is filled, average maximum operating temperature of the water, minimum operating pressure, and the maximum operating pressure which is typically chosen at 10 percent below the relief valve setting. Elevation differences between the tank, pumps, relief valves, and top of the system may also be considered.

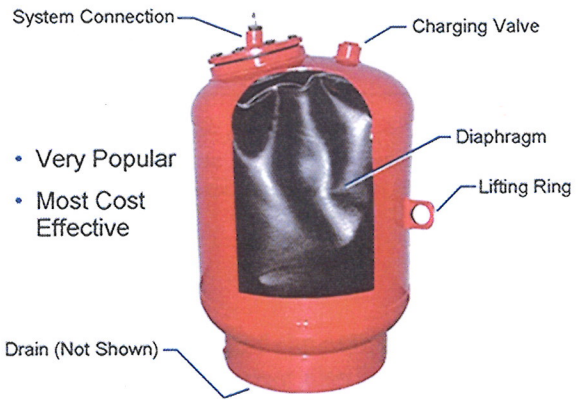

Figure 29

Diaphragm Type Expansion Tank
Photo courtesy of Bell & Gossett

For maximum pump protection, the tank should be located on the suction side of the pumps, usually the point of no pressure change (where a gauge would read 0 psig). Consulting with your local tank vendor for advice on the best location is advised in critical situations. A wrong location may result in pump cavitation or the need for excess residual system pressure.

Open Tank
- open to air
- Air - H2O interface.



closed Tank
- V popular
- captured air space
- air - water interface.



closed diaphragm Tank
- flexible membrane
- No air water interface
- V popular

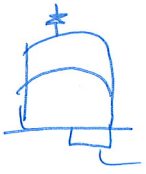

Air Separators

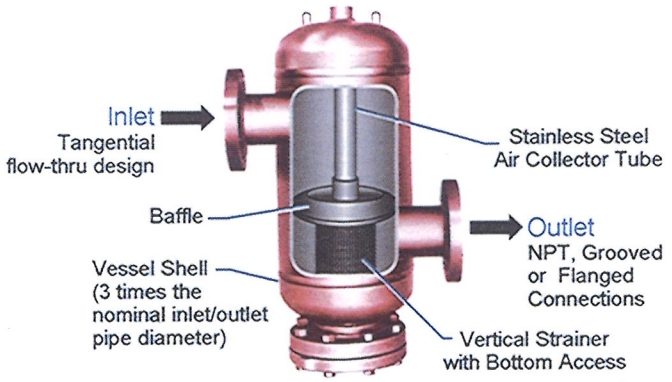

Figure 30

Air Separator

Air Vents

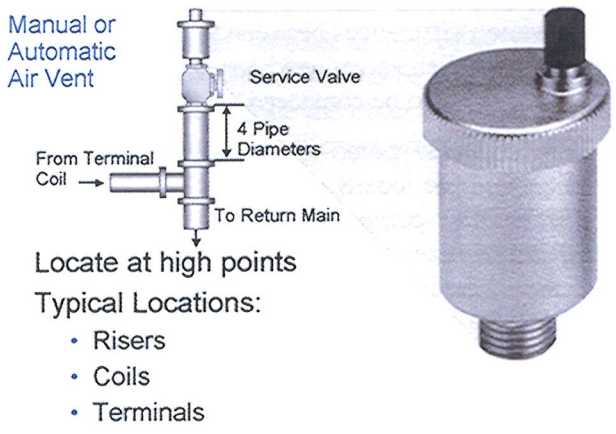

Figure 31

Air Vent Piping

Thermometers, Gauges, Pete's Plugs

It is recommended that thermometers, sensors, and gauges be mounted at the inlet and outlet of each major piece of equipment. Major pieces of equipment are chillers, boilers, air handler coils, cooling towers, thermal storage tanks, and pumps.

Pete's plugs are small fittings with a rubber seal that can be used to read temperature or pressure with an insertion type thermometer or pressure gauge. They can be used in lieu of fixed location thermometers and gauges and are typically installed at small air-handling units, fan coil units, water source heat pumps, etc. Pressures are used to verify flow through heat exchangers and temperatures are used to measure equipment performance. It is very important that gauges or Pete's plugs are located immediately upstream and downstream of each piece of equipment's connection stub-out but prior to any valves. If mounted after the valve the pressure reading would include the pressure loss through the valve, this would give an inaccurate reading.

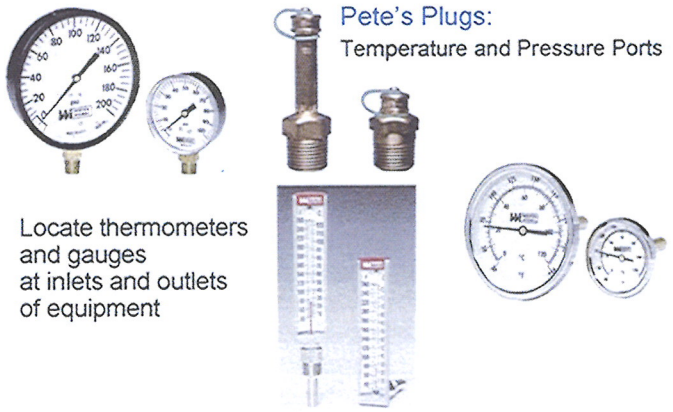

Figure 32

Typical Thermometers, Pete's Plugs, and Gauges
Gauges and thermometer photos courtesy of Weiss Instruments, Inc.

Pipe Hangars and Anchors

All piping should be supported with hangers that can withstand the combined weight of pipe, pipe fittings, valves, fluid in the pipe, and the insulation. They must also be capable of keeping the pipe in proper alignment when necessary. Where extreme expansion or contraction exists, roller-type hangers and saddles should be used. The pipe supports must have a smooth, flat bearing surface, free from burrs or other sharp projections that would wear or cut the pipe.

Recommended Support Spacing for Schedule 40 Pipe	
Nominal Pipe Size (in.)	Distance Between Supports (ft)
¾ - 1¼	8
1½ - 2½	10
3 – 3½	12
4 – 6	14
8 - 12	16
14 - 24	20

Figure 33

Recommended Support Spacing for Schedule 40 Pipe

The controlling factor in the spacing of supports for horizontal piping is the deflection of piping due to its own weight, weight of the fluid, piping accessories, and the insulation. The table lists the recommended support spacing for Schedule 40 steel pipe, using the listed conditions with water as a fluid. The support spacing for copper tubing is given in the next table, which also includes the weight of the tubing filled with water, fittings, accessories and insulation.

100 ft. 4 inch sch 40 Black steel pipe.
how many needed? 100 ft = 1079 lb. H_2O 551 lb: 1630 lb ÷ 2.2.
water vol 1 Gal = 8.33 lb. $\frac{551}{8.33}$ = 66.15 Gal ×800 by

In the vertical direction, on a tall building, i.e. 20-stories, the risers might be anchored on the 5th floor and on the 15th floor with an expansion device located at the 10th floor. This arrangement allows the riser to expand in both directions from the 5th and 15th floor, resulting in less pipe travel at headers, whether they are located at the top or bottom of the building or in both locations. Smaller buildings, i.e. 5-stories, risers are anchored but once. Usually this is done near the header, allowing the riser to grow in one direction only, either up or down depending on the header location.

Recommended Support Spacing for Copper Tubing

Tube OD (in.)	Distance Between Supports (ft)
5/8	6
7/8 - 1 1/8	8
1 3/8 - 2 1/8	10
2 5/8 - 5 1/8	12
6 1/8 - 8 1/8	14

Figure 34

Recommended Support Spacing for Copper Tubes

Pipe Anchors

Unless piping is adequately and properly anchored, expansion may put excessive strain on fittings and equipment. Anchors, guides and expansion loops or compensators are located according to job conditions.

Horizontal expansion is usually taken up in the many direction changes that occur in a normal layout. When long straight runs occur, proper anchoring is required, as are guides and either expansion devices or pipe loops to allow proper movement of the pipe as it goes through its temperature range. Detailed presentations on this topic are available in the Carrier System Design Manual, Part 3, and the ASHRAE Handbook-HVAC Systems and Equipment.

Volume Tanks

An important factor in piping design involves having enough volume of chilled water in the piping system to assure stable operation of the chiller. Loop volume is the amount of fluid in the cooler, piping, cooling coils and optional storage tank that remains in circulation at all times. If the loop volume is too small, fluctuations in the loading will affect the chiller much more quickly and result in greater compressor cycling with resulting chilled water temperature swings. All chiller manufacturers require a minimum loop volume for proper operation of their chillers to prevent rapid changes in water temperature and short cycling of the compressor. In effect, adequate loop volume acts as a "flywheel" so that the chiller does not cycle too quickly. To minimize cycling, the minimum loop volume should be at least three gallons per nominal ton capacity at the design point for normal comfort cooling duty applications. For process and loads that operate under variable flow conditions; the minimum should be from six to ten gallons per ton. Applications that operate under low ambient temperatures or use brine typically also require six to ten gallons per nominal ton. All recommendations are manufacturer dependent.



Suggested volume tank designs

Rule of thumb for chilled-water systems:

- 3 gallons per ton of chiller for normal air-conditioning duty
- 6 to 10 gallons per ton of chiller for process duty or low ambient unit operation

Figure 35

Volume Tank Requirements

A method to increase the loop volume is the addition of a volume tank connected to the chilled water system.

For example, suppose a chiller installation with a 200-ton chiller was connected to a system calculated to have a loop volume of 400 gallons. The recommended minimum loop volume would be:

(200 nominal tons) * (3 gallons/nominal ton) = 600 gallons

If the loop volume were 400 gallons and the minimum required loop volume 600 gallons, a volume tank holding a minimum of 200 gallons would be required.

Typical Piping Details at Equipment

Now that we have a basic understanding of piping systems and valves, let's take a look at some typical piping details at various pieces of equipment.

Chillers

The installer should mount the valves high, when the piping permits, to allow for removal of piping in order to service the equipment.

Locating thermometers in vertical piping helps avoid damage that could result from mounting them on a horizontal section of pipe.

Locate gauges close to the equipment so that the condenser and cooler pressure drops can be measured and flow verified.

All of these devices must be accessible. The thermometers and gauges must be at an elevation and angle so they can be read.

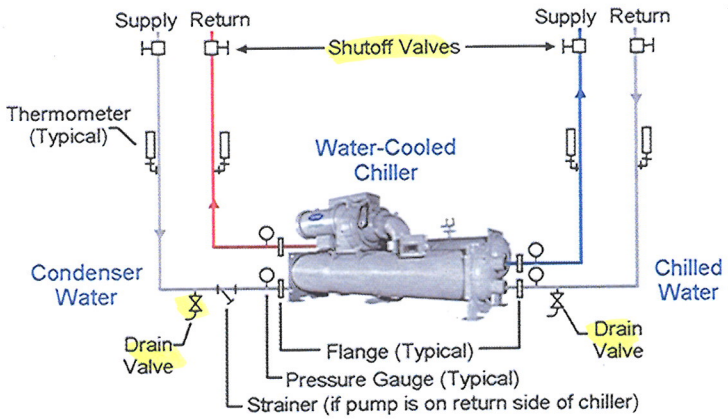

Figure 36

Typical Water-Cooled Chiller Piping Details, Two-Pass Evaporator And Condenser Shown.

AHU Coil or Fan Coil

For coil piping, where unit discharge conditions are critical, a good recommendation is to use a separate balancing valve so flow can be set and then the valve locked in place. Having a valve on each side of the control valve also allows for control valve servicing.

Mount the valves high and install flanges or unions on the entering and leaving coil connections to allow for removal of piping to service equipment.

Locate Pete's Plugs as close to the coil as possible so pressure can be measured and flow verified.

Coil control valves can be 2-position, 2-way modulating, or 3-way modulating. Multi-row coils should always be piped for counterflow and per the manufacturer's recommendations. This means the water moves through the coil opposite the direction of airflow. This maximizes heat transfer. For a complete discussion on counterflow, refer to TDP-614, Coils: Direct Expansion, Chilled Water, and Heating.

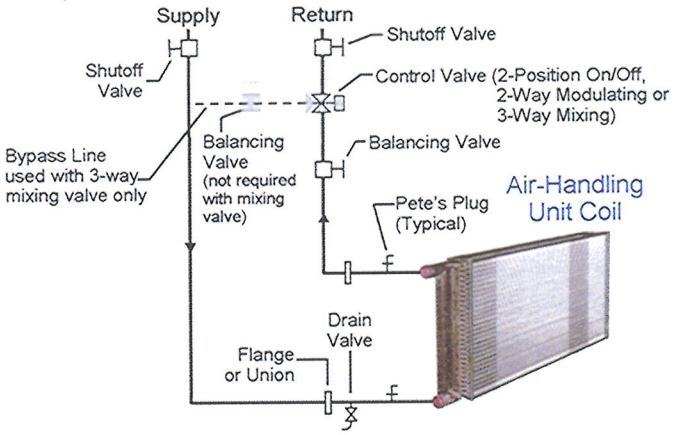

Figure 37

Typical Hot or Chilled Water Coil Piping Detail

Pumps

A concentric reducer is recommended at the pump discharge to allow for smooth flow.

A triple-duty valve

can be substituted in lieu of a separate shutoff, balancing, and check valve.

An eccentric reducer is recommended at the pump suction to prevent air pockets in the suction line entering the pump.

The check valve prevents reverse flow through the pump. Shutoff valves are provided to isolate the pump for servicing.

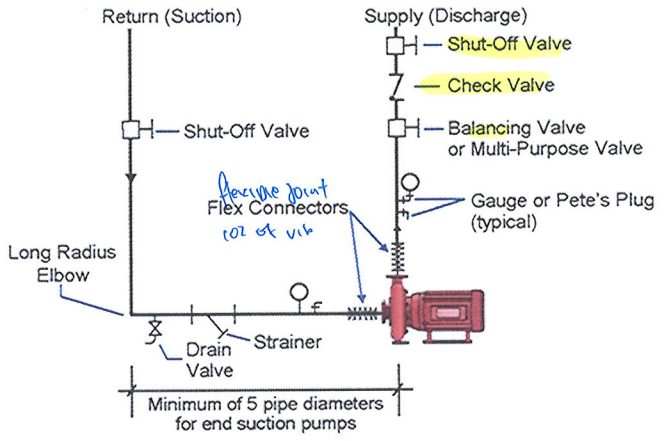

Figure 38

Pump Piping Detail

A separate balancing valve is used so that flow can be set and then the valve locked in place. A single combination valve with a memory stop can be used in lieu of having a shutoff valve and balancing valve on the pump discharge, though it should be mounted downstream of the check valve.

Gauges or Pete's plugs should be located as close to the pump as possible so pressure can be measured and flow verified.

A suction diffuser (combination of a strainer and straightening vanes) can also be used at the inlet of the pump. A suction diffuser replaces the valve, strainer, and 90-degree elbow since these items are part of the diffuser. Suction diffusers are used when space limitations do not allow for a minimum of five pipe diameters on the suction side of end-suction pumps. They may also be used to save material and labor cost.

System Piping Arrangements

The figures that accompany the description of each piping arrangement do not show all possible system variations. The diagrams that are shown are to help you understand some of the basic variations of chilled water and condenser water systems.

Parallel and Series Chiller Evaporators

Where chiller capacities greater than can be supplied by a single chiller are required, or where stand-by capability is desired, chillers may be installed in parallel. Units may be of the same or different sizes. Usually, equally sized chillers are utilized to accomplish commonality of parts and maintain simplicity. If unequal sized chillers are used, cooler flow rates must be balanced to ensure proper flow to each chiller. Software is available from the chiller manufacturer that automatically stages multiple chillers of equal or unequal size.

Where a large temperature drop (greater than 18° F) is desired, chillers may have to be installed in series. Use of reduced pass configuration may be required to keep waterside pressure drop at an acceptable level.

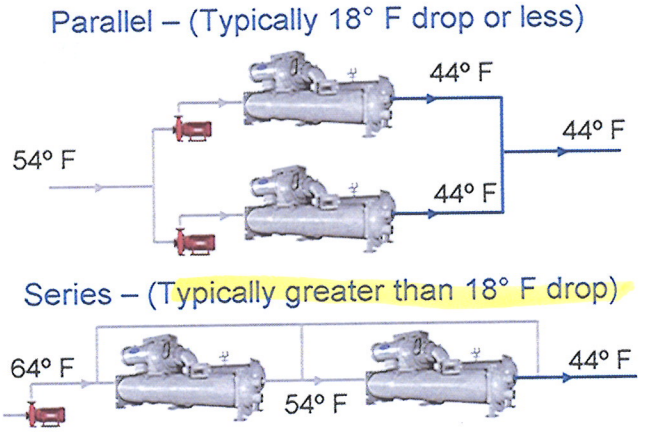

Figure 39

Parallel and Series Chiller Piping
One-pass evaporators shown.

condenser side.
series, counterflow

Future Expansion Arrangements

Parallel chiller arrangement lends itself to future expansion because another chiller can simply be added to the "ladder." Two chillers in a series cannot accommodate future expansion since pressure drop in the evaporator circuit would become too great with three chillers.

Single Water-Cooled Chiller Loop

Shown is a single chiller system. It is important to maintain minimum chilled water loop volumes as discussed previously as a single chiller system is often where a loop volume deficiency can exist.

Note that the chilled-water pump pushes water through the chiller then out to the coils. The heat energy from the pump will be cooled in the chiller evaporator before being recirculated to the coils.

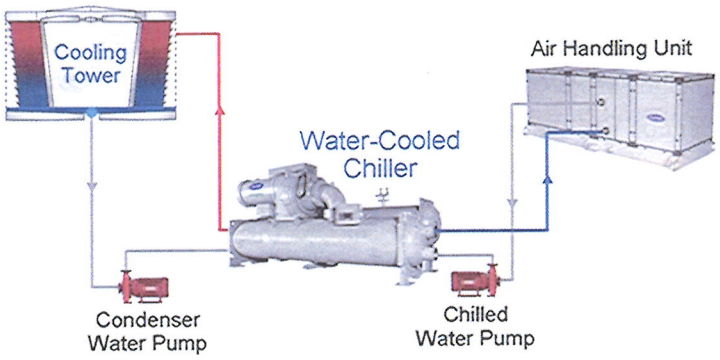

Figure 40

Single Water-Cooled Chiller System Piping, Two-pass evaporator and condenser shown.

Part of ē sys. in series w ē sys.

Volume tank b4 the pump.

expansion tank is not

Multiple Water-Cooled Chiller Loop with Dedicated Pumps

In this parallel chiller scheme, there is a dedicated pump for each cooling tower cell and chiller. When chilled water pumps are piped as shown, each chiller is interlocked to its respective pump. The operation of an individual chiller is dependent on the operation of its pumps and tower fan.

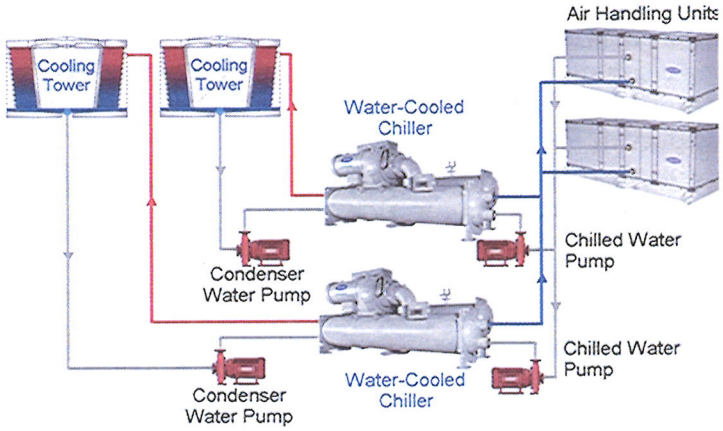

Figure 41

Multiple Water-Cooled Chillers, Dedicated Pumps Two pass evaporator and condensers shown.

sys Fan'l. manual turn on code

Multiple Water-Cooled Chillers with Manifolded Pumps

When chilled water pumps are manifolded as shown, a condition will exist when one chiller is off and the other is running where there would be flow through the off chiller. To eliminate this problem, a 2-position isolation valve must be added to shutoff flow when the chiller is de-energized. The advantage of this arrangement is that either pump can operate with either chiller. A third pump could even be added as a standby if so desired.

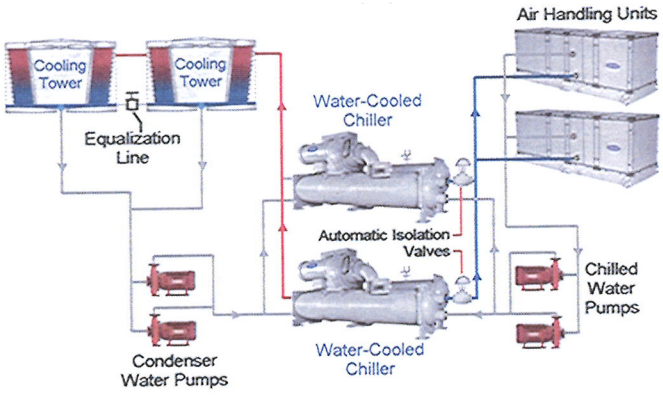

Figure 42

Multiple Water-Cooled Chillers, Manifolded Pumps, Two-pass evaporators and condensers shown.

when 2 on
1 H2O ↓
cooling cap = Flow Rate × ΔT
55 °C ↓
can Trip sys.

Manifolded Pumps Balancing

It is easier to balance a manifolded pumping arrangement when the chillers are equally sized.

Primary-Secondary Chilled Water System

In a primary-secondary system, each parallel-piped chiller in the primary loop starts/stops with its dedicated pump. Flow for each chiller in the primary loop is maintained by water circulating through the chillers and back through the bypass which acts as a hydraulic decoupler line, or "bridge." Water can flow in either direction within the bridge depending on which flow is greater at any one point in time, the primary flow or the secondary flow.

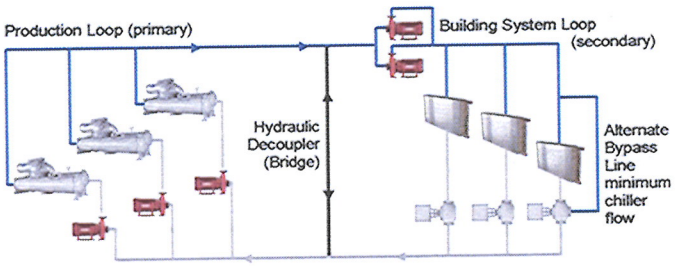

- Secondary pumping station
  - One pump active, the other standby (lead-lag)
  - Pumps are VFD-equipped if all coils are 2-way
  - Matches secondary flow to coil loads
- Hydraulic decoupler maintains constant primary flow

+ Variable Spd Pump

Figure 43

Primary-Secondary Piping System, One-Pass Evaporators Shown.

A primary-secondary chilled-water piping system

is a traditional way of piping the chilled water loop for larger multi-chiller projects. It has been in use for decades and accomplishes isolation of the primary (production) loop from the secondary (building system) loop. This allows control of the chillers and air handlers in the same piping system. The primary loop is contained within the mechanical equipment room (MER) and is often very short. The secondary loop runs throughout the building and serves the coil loads.

When the primary flow exceeds secondary flow, water flows from discharge to suction in the bridge. When the secondary flow exceeds primary flow, water flows from suction to discharge in the bridge.

Usually, variable-speed drives are used on the secondary pumps to match secondary pump flow to coil load flow demand. These pumps are the large, high-head pumps serving the entire system. When VFDS are used, two-way control valves are used on the coils on the load side of the system. The pump station is often a lead-lag pump arrangement with only one pump operating at any one point in time. This provides standby and ability to equalize pump operating hours. Check valves are needed for each secondary pump to prevent water circulating backward through the idle secondary pump. Many designers like to place a 3-way control valve with a bypass on one of the coils to be used as a safety valve for low flow just in case the VFD control fails.

As the two-way coil control valves close off, less water is pumped through the secondary circuit and the secondary loop pressure rises. This would normally mean that the primary pumps would be starved for water if there wasn't a bypass line. However, the flow not needed by the secondary pumps moves from discharge to suction through the bridge and returns to the primary pumps thereby insuring a constant primary loop flow to the active chiller(s).

During startup conditions, the coil control valves might all go wide open and the secondary pump will pump more than the design flow provided by the primary loop. If this happens, water flows the opposite way in the bridge line. The extra water not needed by the primary loop passes from bottom to top in the bridge and back to the secondary pump.

The hydraulic decoupler (bridge) line is typically sized for the flow rate required by the largest chiller and should not exceed a pressure drop of 1.5 ft wg. It should be a minimum of 3-5 pipe diameters long. For simplicity, the bypass line is often sized the same size as the main supply and return lines, provided it does not exceed the stated criteria for pressure loss.

Primary-Only, Variable-Flow Chilled Water System

Primary-only, variable-flow systems take advantage of the ability to modulate the flow through the chiller evaporator and eliminate the need for two sets of pumps (primary and secondary) and instead use a single set of pumps equipped with VFDs.

Variable flow systems have become more popular on primary- secondary systems since there are fewer pumps to buy so floor space is saved, along with first cost.

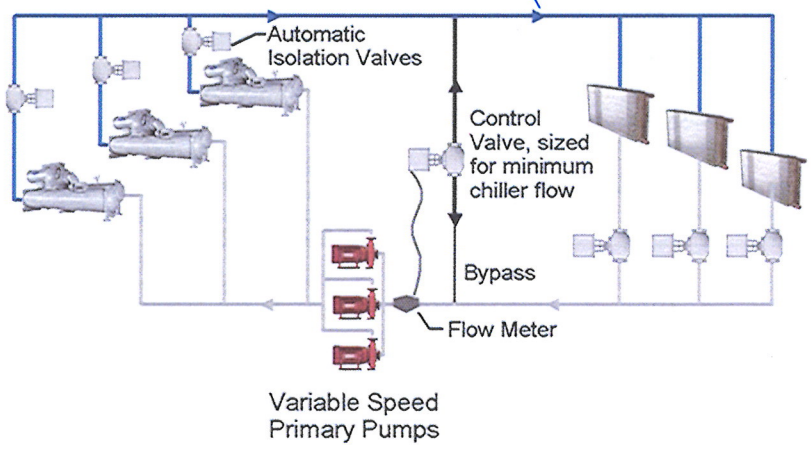

Figure 44

Primary-Only Variable-Flow System, One-Pass Evaporators Shown.

Maximum Capacity of Chillers

With a variable primary water flow, the chillers can be "over-pumped" with the VFD as a means of achieving maximum capacity. Normal return water temperature and flow rate may not load them 100 percent. For a discussion on maximum capacity, refer to TDP 623, Water-Cooled Chillers.

Two-way control valves are used on the coils and a bridge line is still used and is sized for the minimum flow rate through the largest chiller. A control valve (traditionally controlled by a precision flow meter) is used in the bridge to ensure that the minimum flow rate always returns to the operating chiller(s).

It is important to understand, however, that there are still limitations on the amount of flow variability. Specifically, the manufacturer's recommended chilled water flow range must still be respected as well as the rate of change of flow. As a rule of thumb, the minimum evaporator flow rate should not fall below approximately 40 percent to prevent laminar flow. This means that flow may be modulated from 100 percent down to 40 percent, resulting in energy savings as the pump energy is related to speed by the cube of the ratio of speeds. The DDC controls must also limit the rate of flow change to adhere to manufacturer's recommendations. The chiller manufacturer should be contacted for specific chiller application guidelines when designing a primary-only variable flow system. For specific recommendations on variable flow through evaporators, refer to TDP-622, Air-Cooled Chillers, and TDP-623, Water-Cooled Chillers.

Staging Chillers

More recently, it has been found better to stage chillers on actual load, not flow rate, since flow is not necessarily a true indicator of load. To do this, temperature sensors in the supply and the return lines, coupled with flow meters, are used to calculate actual load with DDC software.

Since a primary variable system is inherently more complicated than the traditional primary-secondary system, the operating staff must be trained specifically on how to maintain and operate the variable flow arrangement.

If the installation is in a remote area, or a fail-safe design is required, it is probably better to use a traditional primary-secondary system.

If a primary-only, variable flow system is used, an accurate measurement of the return flow rate is essential to stable, reliable operation. This means a precision flow meter is necessary.

Chiller Head Pressure Control

Overnight cooling of the tower and condenser water loop can produce temperatures below 55° F upon start-up. Chillers are designed to operate at condenser water temperatures 55° F and above. Consequently, a bypass is required to maintain an acceptable water temperature so that the chiller will not shut down upon startup.

Head Pressure Control Piping Methods with Diverting Valve

There are three piping configurations that can be used to control the condensing pressure and temperature in the water-cooled chiller condenser when used on a recirculating cooling tower loop. The first two methods utilize a diverting valve. The third method utilizes either a modulating valve or a VFD to vary the flow rate in the condenser.

Method one locates the condenser water pump "outside" the bypass line such that flow rate will be constant through the cooling tower regardless of diverting valve position. In this scheme, during periods where head pressure control may be required, such as morning start up, the chiller condenser will experience lower flow. These lower flow rates can used to maintain acceptable condensing pressures.

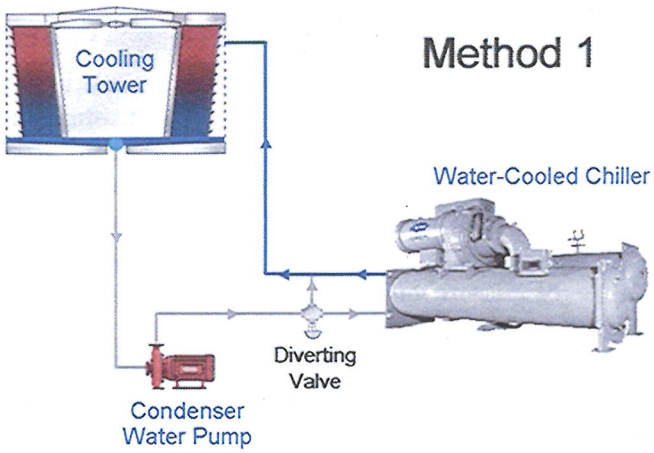

Figure 45

Chiller Head Pressure Control with 100% Tower Flow
Two-pass condenser shown.

Tower manufacturers typically prefer control schemes that maintain constant tower flow so that the fill in the tower can be fully wetted during operation. That way predictable heat transfer in the tower is assured. Reduced flows in the condenser can result in increased fouling in the tubes over time.

Method two locates the condenser water pump "inside" the bypass line such that flow rate will be constant through the chiller condenser regardless of diverting valve position. In this scheme, during periods where head pressure control may be required, the cooling tower will experience a reduction in flow. The chiller manufacturer recommends this scheme, because full flow is maintained in the condenser.

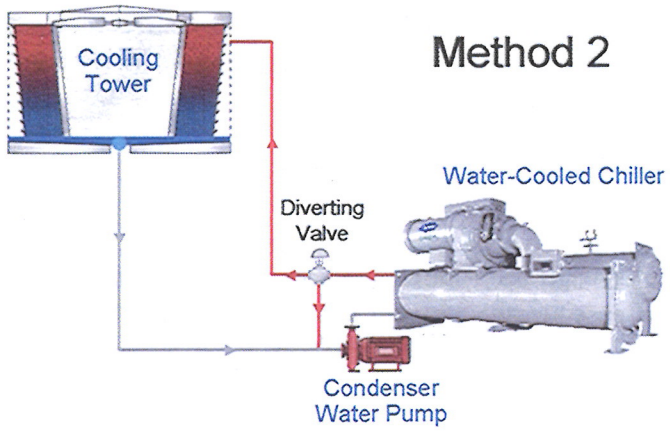

Figure 46

Chiller Head Pressure Control with 100% Condenser Flow,
Two-pass condenser shown.

Head Pressure Control Piping Method with VFD or Modulating Valve

Method three uses a modulating valve to vary the flow in the condenser. The reduced flow rate through the condenser results in less heat transfer and the saturated condensing temperature stabilizes. The flow through the condenser water pump and cooling tower also varies as the system head varies due to the change in valve position. The valve will modulate with the variation in water temperature to maintain the desired saturated condensing temperature. In this design, the condenser pump will "ride the curve" because the condenser flow will vary. A VFD can also be used to control the flow directly from a head pressure control signal from the chiller. This method varies the flow through both the condenser and cooling tower and is not as common as the other two methods using diverting valves.

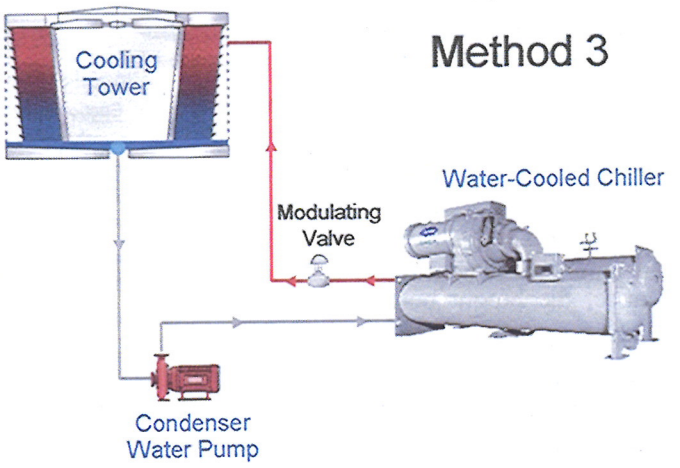

Figure 47

Chiller Head Pressure Control Using VFD or Modulating Valve
Two-pass condenser shown.

Variable Condenser Flow

If flow rate is varied through the condenser, it is paramount to respect the on-board chiller safeties such as high condensing temperature. As a general rule, variable condenser flow is not the norm for chiller operation. This is especially true on centrifugal chillers that are dependent on head pressure reductions at part load. In centrifugals, reduced condenser flows may elevate head pressures, resulting in loss of efficiency and possible chiller instability.

Pump Basics and Types of Pumps

After the piping system has been laid out, and the total pressure loss, or head, for the pumps is calculated, the selection of pumps can be made. However, a basic understanding of pump terminology is required. In this TDP module we will concentrate on centrifugal pump designs which are the most common types used in comfort air conditioning.

Capacity

Capacity is the amount of liquid that can be pumped, given in terms of gallons per minute (gpm).

Head

Head (hd) is an energy unit that is usually expressed in feet of the liquid being pumped. In a closed system, friction is the only loss or head that the pump has to overcome. The height of water on the suction side of the pump is always exactly equal to the height of the discharge side piping. In open systems this is not true, there is always a difference in head between the suction side and discharge side of the pump. In a cooling tower for instance, the height between the water level in the basin and the exit from the distribution nozzles at the top of the tower represents the unbalanced head that must be overcome by the pump. If the distribution system consists of spray nozzles that require a specific pressure to force water through the nozzles, this pressure must be added to the static head also. The total head of the pump will consist of the following: pipe friction loss, valves including control valves, accessories, equipment such as coolers, condensers coils, air separators, etc., and any unbalanced head.

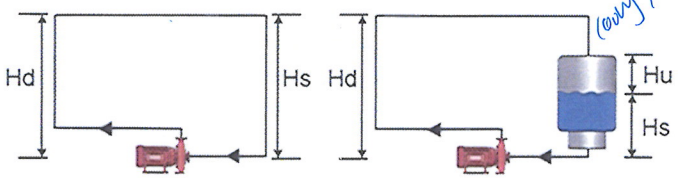

Closed System (evaporator)
- Suction head is Hs
- Discharge head is Hd
- Hs = Hd
- Pump must overcome friction loss of the piping circuit only

Open System (condenser)
- Discharge head = Hd
- Unbalanced head = Hu
- Suction head = (Hd - Hu)
- Pump overcomes friction losses plus Hu

Figure 48
Pumping Head Examples

If you have a high-rise building, the static head can impose significant pressure on the system components. Example – A 50-story building with 12-ft between floors would be 600 ft. high. Since 2.31 ft. equals 1 psi, the pressure on the components at the lowest level would be 600 ft./2.31 ft/psi = 260 psi. The system components at the lowest elevation must be designed for this pressure. In this example, the chiller "waterboxes" would have to be constructed to accommodate 260 psi. If the cooling tower was on the roof, the condenser waterboxes would have to be 300 psi rated as well. If the cooling tower was ground-mounted, the condenser waterbox could be standard construction.

Discharge Head

Discharge head is the head at the pump discharge, made up of the static head at the pump outlet, any positive static pressure in the discharge side of the system, discharge pipe friction loss, and any equipment pressure drop. A pump discharge pressure gauge would indicate total discharge head.

Suction Head

Suction head is the head indicated on a pressure gauge at the pump suction. In a closed-loop system it would be the remaining discharge pressure after subtracting all the piping friction, and the valve and equipment losses. In an open-loop system, suction head includes static head (or lift), entrance loss and friction head in the suction piping, and any positive pressure existing on the suction side. With a closed-loop system in operation, a pressure gauge at the pump suction would indicate a positive suction head. On an open-loop system the gauge would read negative if the pump was above the fluid source being pumped.

Liquid Horsepower

Liquid horsepower is obtained by the formula, gpm * hd * sp gr ÷ 3960 (for standard water sp gr =1.0), where 3960 converts the equation units into horsepower (33,000 ft * lb per minute, divided by 8.33 lb per gallon).

Brake Horsepower

Brake horsepower (bhp) is the power required to drive the pump and equals the liquid horsepower divided by the overall efficiency of the pump.

Net Positive Suction Head

Net positive suction head (NPSH) is equal to the pressure drop in ft wg of the liquid from the suction flange to the point inside the impeller where pressure starts to rise. NPSH available at the pump suction for the actual application must always be greater than the NPSH required for the pump used. Failure to do so would allow fluid vaporization within the pump (cavitation). Cavitation can cause impeller failure, shaft failure and/or seal failures. To check the available NPSH at the pump suction flange in a given system, use the following formula:

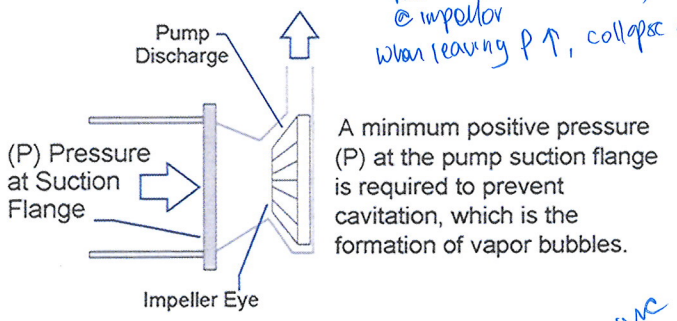

Figure 49

Net Positive Suction Head at Pump Inlet

$$NPSH = 2.31(P_a - P_{vp}) + (H_s - H_f)$$

If using a fluid other than water use the following formula:

$$NPSH = \frac{2.31(P_a - P_{vp})}{sp\ gr} + (H_s - H_f)$$

Where:

$NPSH$ = net positive suction head

2.31 = conversion factor to change 1 psi to pressure head in ft of water

P_a = atmospheric pressure (absolute pressure, psia)

P_{vp} = vapor pressure corresponding to water temperature at the pump suction. For water returning from a cooling tower at 85° F it is 0.59648, for 86° F water it is 0.61585.

H_s = elevation head, static head (ft) above or below the pump suction. (If above, positive static head; if below, negative static head, sometimes termed suction lift.)

H_f = friction head (ft), loss in suction line. Must include entrance loss and pressure drop through valves and fittings.

$sp\ gr$ = specific gravity of the fluid being pumped

NPSH

Net positive suction head does not tend to be an issue in closed-loop piping systems. In open-loops, if the pump is elevated above the cooling tower basin, it is prudent to check the NPSH requirements of the pump.

Figure 50 shows a cross-section of a typical pump. This figure is of a centrifugal inline pump, which gets its name from the straight inlet and discharge water flow. Other centrifugal pump designs will be discussed later in the TDP Module. The figure shows six components of a typical pump: the motor, coupler, bearings, pump shaft, mechanical seal, and the impeller.

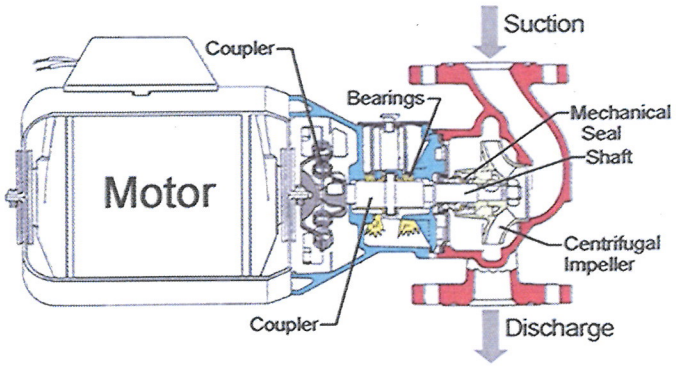

Figure 50

Typical Pump Cross-Section

The motor is typically an open-drip proof type provided by the pump manufacturer and selected specifically for the head and flows required.

A coupler mechanism is provided to attach the pump shaft to the motor assembly.

Specifically designed bearings are utilized to provide constant circulation of oil over all bearing surfaces.

The pump shaft serves the purpose of transmitting the motor torque to the impeller.

A mechanical seal is required to prevent water from entering the motor and bearing compartment.

The impeller moves the water through the pump assembly. It is selected specifically for the flow and head required for the application.

Pump Curve

The optimal pump curve for an air-conditioning application is shown here. The very steep curve is not desirable for HVAC duty because it can lead to surging at low flow rates. The very flat curve can be an issue because large flow rate changes occur with small changes in the head.

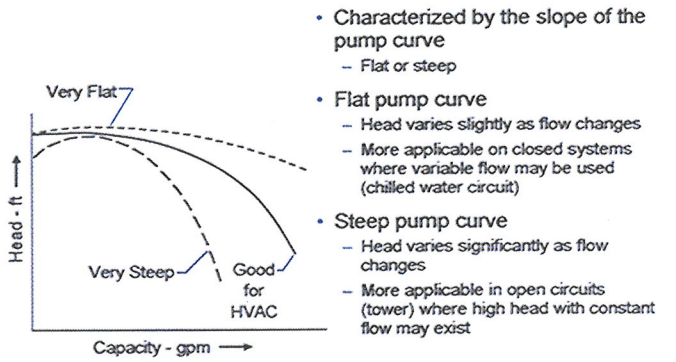

Figure 51

Pump Curve Examples

Important items to understand about pumps are:

1. Varying the speed – proportionally raises or lowers the head and capacity. The whole head curve shifts up or down.
2. Varying the impeller diameter – proportionally raises or lowers the head and capacity. The whole head curve shifts up or down. Increasing the impeller size raises the head and capacity.
3. Varying the impeller diameter – proportionally varies the capacity.

4. Varying the pitch and number of vanes within the impeller changes the shape of the head capacity curve.
5. Varying the impeller and vane designs produce variations in head-capacity relationships. Narrow impellers with larger impeller-to-eye diameter ratios develop a larger head. Wide impellers with low diameter ratios are used for low heads and large flows.

Changes in speed and impeller diameters are reflected in pump performance as follows:

$$\frac{rpm_1}{rpm_2} \text{ or } \frac{impeller\ dia._1}{impeller\ dia._2} = \frac{gpm_1}{gpm_2} = \left(\frac{head_1}{head_2}\right)^2 = \left(\frac{bhp_1}{bhp_2}\right)^3$$

A given pump operates along its own head-capacity curve. It is a centrifugal device just like a fan. At full capacity flow, the operating point falls at the crossing of the pump head-capacity curve and the system head curve (Point 1). If the pressure drop increases the system curve and the operating point moves up the head-capacity curve (Point 2, reduced water flow). If a greater flow is desired, the pressure drop must be reduced and the operating point would move down the curve (Point 3) or the pump could be speeded up, or the impeller size increased which would move the head capacity curve upward (Point 4). These performance characteristics are just like a fan in a duct system.

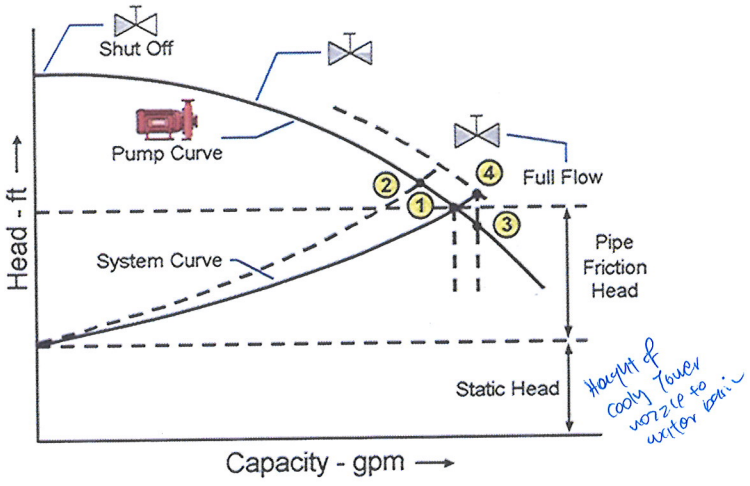

Figure 52

Pump and System Curve Intersection

If the system head is overestimated and the pump is selected with a high head-capacity curve, unfortunate results may occur. The pump will operate on its head-capacity curve to produce an increased flow at decreased head and increased horsepower demand (Point 1). The system head should always be calculated without undue safety factors or as close as practical to the true values to eliminate possible waste of horsepower or possible overloading of pump motor with an unvalved system. If not sized properly, the balancing valve on the pump discharge may have to be throttled or the impeller size decreased to achieve the desired flow. This is especially true when evaluating system head on a system designed with parallel or series pumps.

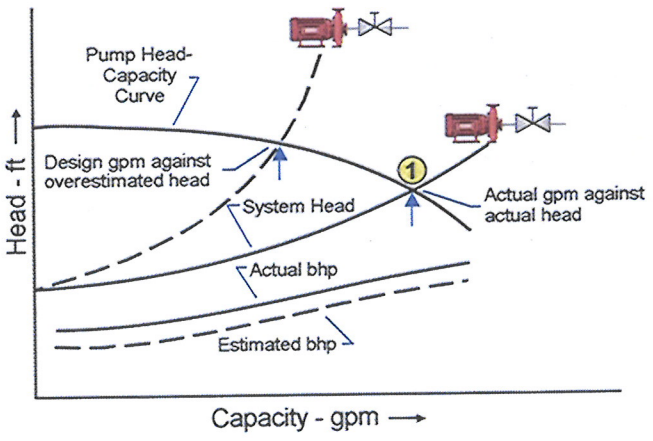

Figure 53

Overestimating Pump Head

Parallel Pumps

Parallel pump operation is most common in HVAC and results in multiple gpm capacities against a common head. Example: Two pumps selected at 120 gpm at 50 ft of head will produce 240 gpm at 50 ft of head. Parallel pump application is for systems requiring high capacity with a relatively low head or for systems where a number of small pumps handle the load with one or more pumps shutting down as required. The pumps should have matched characteristics and the motor should have ample power to avoid overloading when operated singly.

Parallel Pumps

Parallel pumps can provide a high degree of redundancy because there are multiple pumps on the same system. When only one pump of a two-pump system is operational, the decreased head results in a flow of about 60 percent of total. That is because the system resistance has changed and the active pump can produce more flow. Parallel pumps should be selected of equal size.

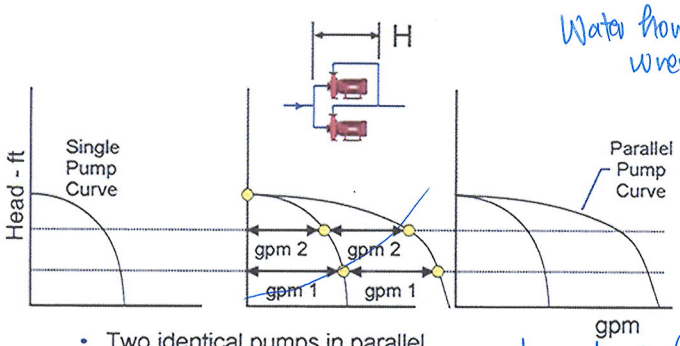

- Two identical pumps in parallel
- Resulting gpm doubles
- Plot result to obtain parallel pump curve

Figure 54

Parallel Pump Characteristics

Series Pumps

Identical series pumps are used if very high head is required as the flow rate is the same as for each individual pump, but the head is additive. A single higher rpm pump (i.e. 3500 rpm) could be selected, but the redundancy value of dual pumps would be lost.

Series Pumps

Series pump applications are less common in HVAC applications because a single pump can usually develop enough head.

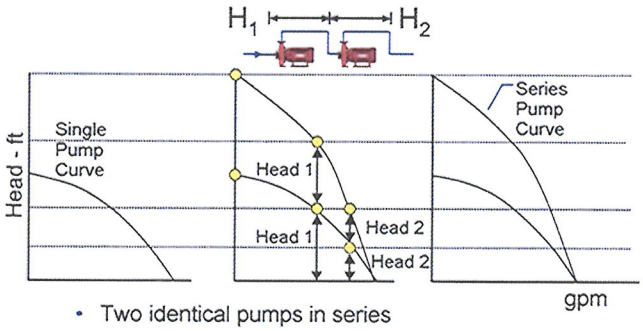

- Two identical pumps in series
- Resulting head doubles
- Plot result to obtain series pump curve

Figure 55

Series Pump Characteristics

Variable Speed Pumping

Variable speed pumping is very common. A pump with a VFD operates much like a fan with a VFD. A differential pressure sensor located near the end-of-run in the piping system sends a signal to the VFD to slow down the pump rpm if pressure in the piping is rising, or increase the rpm if the pressure is falling from set point. The pump moves its rpm along the system curve resulting in variations in flow rate.

Energy savings are excellent at reduced flow rates as the bhp follows the cube ratio of the rpm.

$$bhp_2 = bhp_1 * \left(\frac{rpm_2}{rpm_1}\right)^3$$

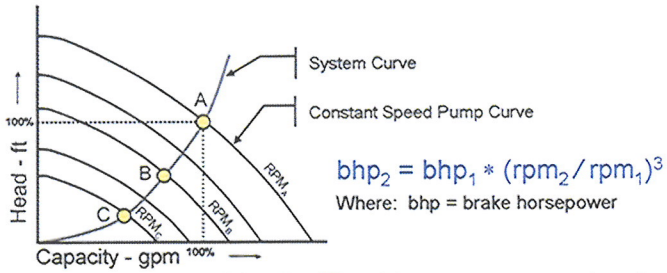

- As control valves modulate, the differential pressure across supply and return lines rises sending signal to VFD to modulate pump speed
- Operating point moves along system curve to new rpm line (points A - B - C)
- According to the pump affinity laws the energy savings is a cubed function of the ratio of the pump speeds

Figure 56

Variable Speed Pumping Characteristics

Selection

Pumps should be selected based on design, size, service, and performance. In terms of performance, a pump should be selected to provide the required flow rate at the design head while trying to achieve the lowest possible horsepower. Pump catalogs, with pump performance curves, allow the proper pump to be selected. Most pump manufacturers also have software programs that can select the optimal pump for your application. The following is an example of a pump selection from a manufacturer's program.

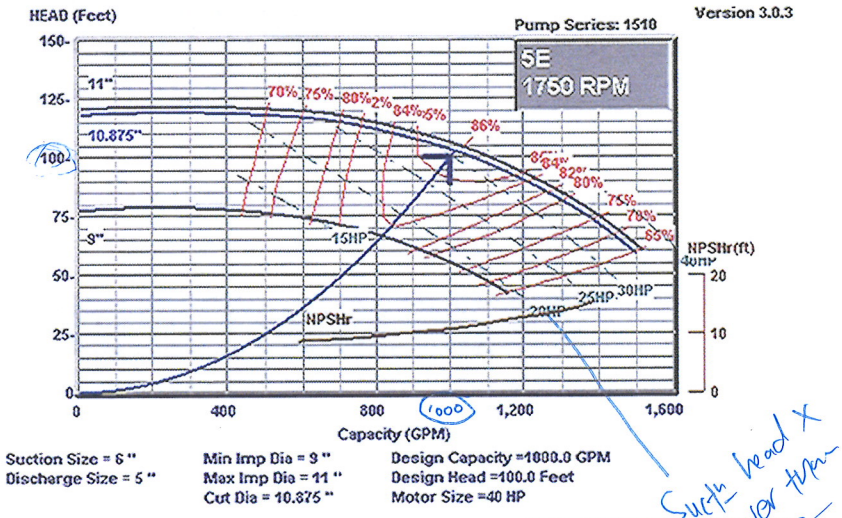

Figure 57

Typical Centrifugal Pump Selection Screen Capture
Courtesy of Bell & Gossett

Centrifugal Pump Types

There are several types of centrifugal pumps used in the HVAC industry, such as inline, close-coupled, end suction, vertical split case, and horizontal split case. Which type of pump to use is determined by the flow rate and head requirements, available space, serviceability and cost. The Pump Type Comparison chart below shows the ranking of each type of pump for each category.

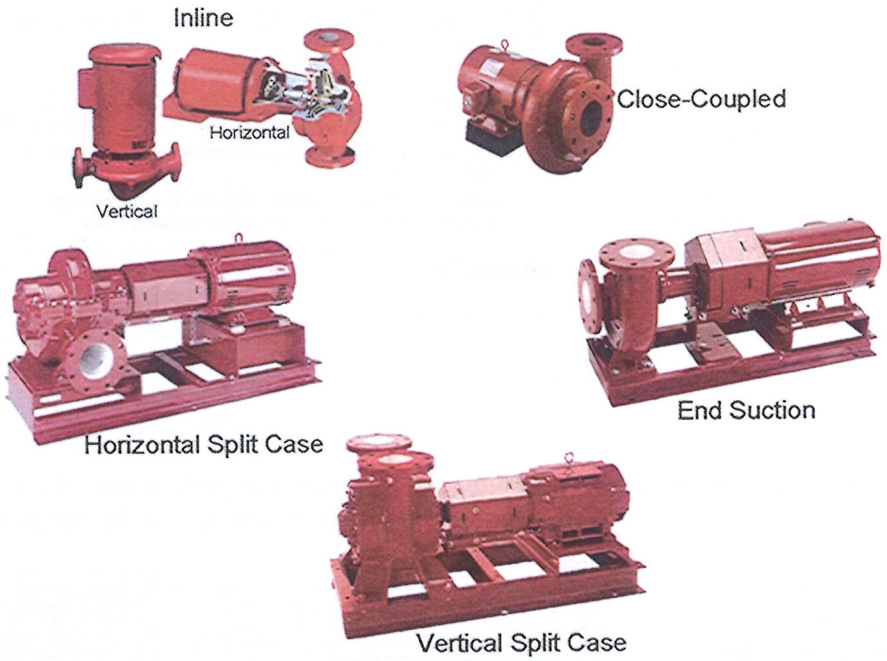

Figure 58

Types of Centrifugal Pumps
Photos courtesy of Bell & Gossett

Pump Type	Cost	Flow & Head Capability	Space Required	Ease of Service
In Line	Least 1	200 gpm @ 55 ft	Least 1	Poor 5
Close-Coupled	2	2,300 gpm @ 400 ft	2	4
End Suction	3	4,000 gpm @ 500 ft	3	1
Vertical Split Case	4	9,000 gpm @ 400 ft	4	2
Horizontal Split Case	Highest 5	40,000 gpm @ 600 ft	Most 5	Good 3

Figure 59

Pump Type Comparison

Pipe Sizing and Pump Selection Example

Steps 1-7 use a condenser water piping loop as the example system. Step 8 is for sizing the chilled-water piping loop. Once the piping system with all pipe routing, piping accessories, and equipment has been drawn and the flow rate for each piece of equipment has been determined, it becomes necessary to size the piping. Sizing of the piping will allow the total resistance (head) in the system to be determined so the pumps can be selected.

Step 1: Determine Water Velocity in Piping

Pipe size is limited by velocity based on noise and pipe erosion considerations. Both sound and erosion increase as the velocity increases. The table below gives recommended velocity limits, which are based on experience and are designed to give good balance between pipe size and system life.

Water Velocity

For our first example, sizing the condenser water piping on a single chiller system we will stay between 5 and 10 fps.

Recommended Water Velocities

Service	Velocity Range (fps)
Pump discharge	8 to 12
Pump suction	4 to 7
Drain line	4 to 7
Header	4 to 15
Mains and Riser	3 to 10
Branches and Runouts	5 to 10
City water	3 to 07

Figure 60

Recommended Water Velocities

The header pipe is close to the pump and carries fluid to the mains and risers. Mains (horizontal) and risers (vertical) distribute the fluid to the various areas of the building where branches and runouts feed the water flow to the air terminals, fan coils, baseboard, etc.

Step 2: Determining Piping Friction Losses

Friction Loss rate for pipe can be found by using Charts 1, 2 and 3, which are found in the Appendix. Charts 1 and 2 are normally used for larger size steel pipes, ≥2 ½-in., and Chart 3 is usually for smaller pipes, ≤2-in., where copper tubing is commonly used.

Chart 1 applies to new, smooth, clean, standard weight, steel pipe and can be used to determine the friction loss rate in a closed-loop piping system, such as a chilled water or hot water re-circulating system.

Chart 2 applies to standard weight steel pipe that has been subject to scaling. This chart can be used to determine the friction loss rate in an open re-circulating piping system such as a condenser water system with cooling tower.

Chart 3 is used to determine the friction loss in copper tubing, which can be expected to stay clean throughout its normal life. Chilled or hot water systems that use copper piping would be sized with this chart.

Each chart gives the friction loss or head in feet of water per 100 ft of straight pipe.

Table 4 is the physical properties of steel pipe. This is helpful for inside areas, pipe and water weights.

Friction loss in valves and fittings can be determined by using equivalent length Tables 5, 6, 7 and 8.

The equivalent length tables were derived using the published manufacturer's Cv values. This was done to simplify and streamline the process for determining the friction loss in valves and fittings.

All friction losses are in equivalent length (feet) of straight pipe.

Cv

Cv is a flow coefficient used in the valve and controls industry. It is defined as the gallons of water (at 60° F) that will pass through any valve in one minute at a one-pound pressure drop.

Step 3: Gather Job Specific Component Pressure Drops and Design Data

Given:

100- ton cooling load

Entering chilled water temperature (54° F) 12.2°C

Leaving chilled water temperature (44° F) 6.7°C

Entering condenser water temperature (85° F) 29.4°C

Leaving condenser water temperature (95° F) ~~39.4°C~~ 35°C

AHU-1, 45- ton load 9.9 ft

AHU-2, 55- ton load 13.4 ft

1 ft = 3 kPa.

Pressure drop.

Equipment selections should be done to determine the pressure drop through each piece of equipment. This can be done by using the manufacturer's computerized selection program or published data.

Pressure drop

Chiller	30 Series	Cooler PD	12.4 ft wg
		Condenser PD	11.0 ft wg
AHU-1	39 Series	Clg. Coil PD	9.9 ft wg
AHU-2	39 Series	Clg. Coil PD	13.4 ft wg
Tower	From Vendor	Unbalanced head	6.5 ft wg
	Required Nozzle Pressure		12.5 ft wg
Air Separator	From Vendor	From Vender PD	1.3 ft wg

Figure 61

Equipment Selection

based on design water flow rate selected

Step 4: Review the Highest Pressure Drop Circuit and Calculate Water Flows

Cooling tower details usually do not show the exact exit point of the water from the distribution nozzles or the exact water height in the basin. We need to determine the unbalanced head. It doesn't have to be exact; in fact, if you just use the water inlet height minus the outlet height, you will be close enough. For our example, we have a nozzle pressure drop of 12.5 feet and a height of 6.5 feet for a total tower pressure drop of 19 ft wg.

You should contact the cooling tower manufacturer for the pressure drop of the cooling tower selected. Most cooling tower electronic selection programs will show this information. If this information is not available, an approximation of 15 ft wg will be close enough in most cases.

The condenser flow rate can normally be obtained from the actual chiller selection. For our example, we will use 3 gpm/ton, which is the ARI standard condenser flow rate.

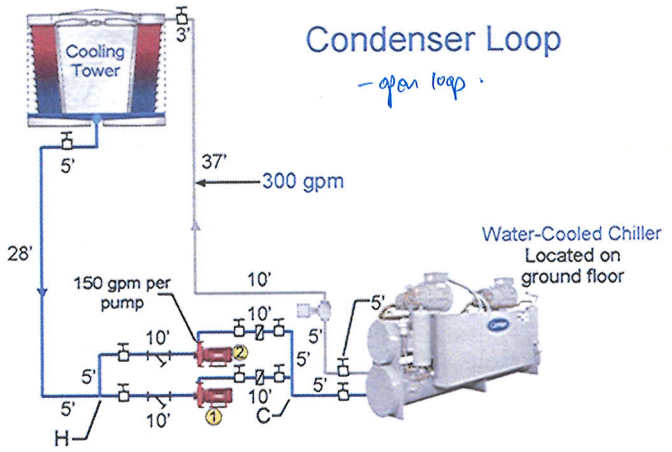

Figure 62

Sizing the Condenser Water Piping

The chilled water flow rate can be obtained from the actual chiller selection that was based on tons and water Δt or it can be calculated based on the following formula:

$$gpm = \frac{tons * 12{,}000\,Btuh/ton}{\Delta t * 60\,\text{min}/hr * 8.33\,lb/gal * sp\,gr * sp\,ht}$$, or more simply,

$$gpm = tons * 24 \div \Delta t$$

$$100 * 24 \div 10 = 240 \text{ gpm}$$

So we will use 300 gpm for the condenser flow rate and 240 gpm for the chilled water flow in the cooler (evaporator).

Calculation of gpm

Note: The above assumes "fresh water" in the cooler and condenser circuit. The water will be chemically treated as discussed earlier, but is still considered "fresh" water. If, for instance, 20 percent propylene glycol (PG) was used in the evaporator loop, the flow rate calculations would need to reflect the properties of the 20 percent PG mixture.

Step 5: Size the Pipe; Find the Friction Rate/100 ft

First, let's size the open-loop system (condenser water system) using Chart 2 to determine the piping friction losses.

Referring to Chart 2 in the Appendix, we find that 300 gpm intersects a 4-in. line size at 8.3 ft per second velocity and 10.0 ft of friction loss per 100 ft of pipe. Since we also have two pumps that handle 50 percent of the flow, we must determine the line size at the pumps. Referring to Chart 2, we find that 150 gpm intersects a 3-in. line size at 6.9 ft per second velocity and 9.3 ft of friction loss per 100 ft of pipe.

The 300 gpm sections of pipe will be 4-in. size, and the 150 gpm sections of pipe will be 3-in. size.

These sizes are within the recommended water velocity and pressure drop per 100 ft recommendations.

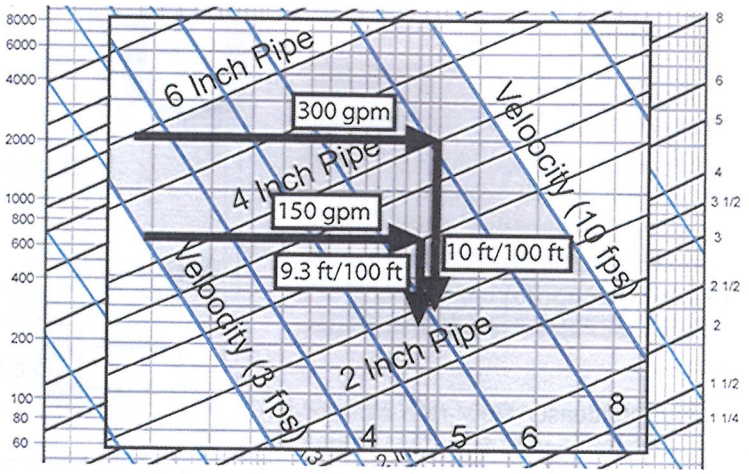

Figure 63

Sizing the Open-Loop Condenser Water Piping Using Chart 2

Step 6: Find the Longest Circuit Pressure Drop

Next let's add up the lengths of straight pipe in each size from the example. We will start at the pump suction and go in the direction of water flow around the loop.

(Note: When two pieces of equipment are piped in parallel, only the circuit with the highest pressure drop should be used in the head calculation.)

3-in. straight pipe (at pump #2) = 5 + 10 + 10 + 5 = 30 ft

4-in. straight pipe = 5 + 5 + 5 + 10 + 37 + 3 + 5 + 28 + 5 = 103 ft

This circuit is represented by C-H

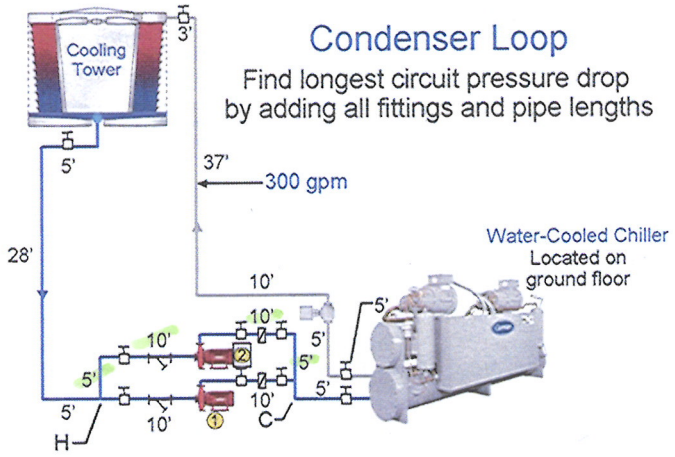

Figure 64

Example Condenser Water Loop

Next let's list the valves and the elbows and any other accessories in the loop in terms of their straight pipe equivalent lengths.

3-in. equivalent lengths (ft)

Pipe (from above)	=	30
Std. ells (qty of 2 at 7.67 ft each) (Table 6)	=	15
Butterfly Valves (qty of 3 @ 11.51 ft each) (Table 5)	=	35
Lift Check Valve (qty of 1 @ 14.06 ft) (Table 5)	=	14
Strainer (qty of 1 at 42 ft) (Table 8)	=	42
Total	=	136 ft

4-in. equivalent lengths (ft)

Pipe (from above)	=	103
Std. ells (qty of 7 at 10.07 ft each) (Table 6)	=	70
Tees (qty of 2 at 6.71 ft each) (Table 5)	=	14
Butterfly valves (qty of 4 at 15.1 ft each) (Table 5)	=	30
Control valve, butterfly (qty of 1 at 16 ft) (Table 8)	=	16
Total	=	233 ft

Step 7: Sum All the Pressure Drops for Pump Selection

Total Friction Loss = Equivalent ft * loss/100 ft

For 3-in. pipe, 136 equiv. ft * 9.3 ft /100

For 4-in. pipe, 233 equiv. ft * 10.0 ft /100

Total = 12.65 + 23.3 = 35.95 ft wg (round off to 36 ft wg pressure drop)

Enclosed is the actual pump curve for the condenser water pump based on 150 gpm each at 66 ft wg of head.

Head on Condenser Water Pump (ft)

Friction head	=	36.0
Unbalanced head	=	6.5
Pressure drop through condenser	=	11.0
Pressure drop through nozzles	=	12.5
Total head across pump	=	66.0

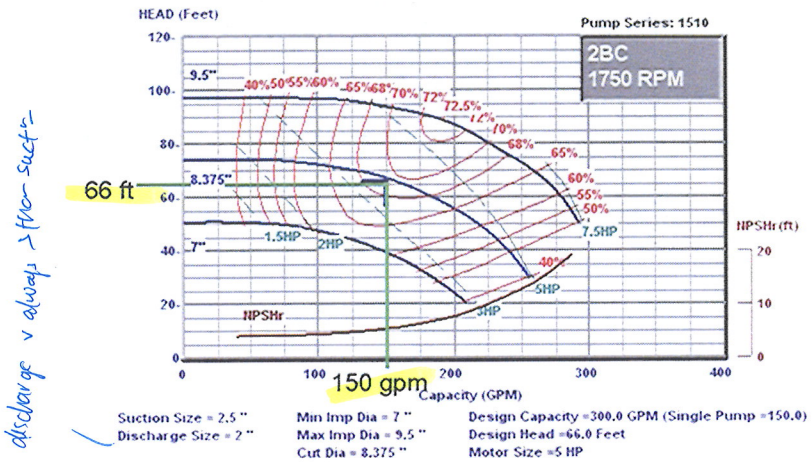

Figure 66

Example Condenser Water Pump Selection – Parallel Pumps, Single Pump Performance
Screen capture courtesy of Bell & Gossett

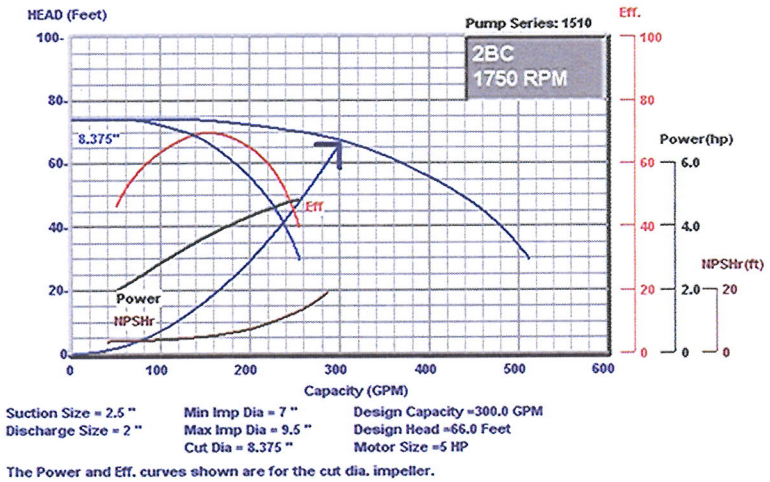

Figure 65

Example Condenser Water Pump Selection – Parallel Pumps, Performance of Both Pumps
Screen capture courtesy of Bell & Gossett

Step 8: Size the Chilled Water Loop

The closed-loop system (chilled water system) should be sized using Chart 1 to determine the piping friction losses.

Referring to Chart 1, we find that 240 gpm intersects a 4-in. line size at 6.3 fps velocity and 3.4 ft of friction loss per 100 ft of pipe. Since we also have two pumps that handle 50 percent of the flow, we must determine the line size at the pumps. Referring to Chart 1, we find that 120 gpm intersects a 3-in. line size at 5.5 fps velocity and 3.5-ft of friction loss per 100 ft of pipe.

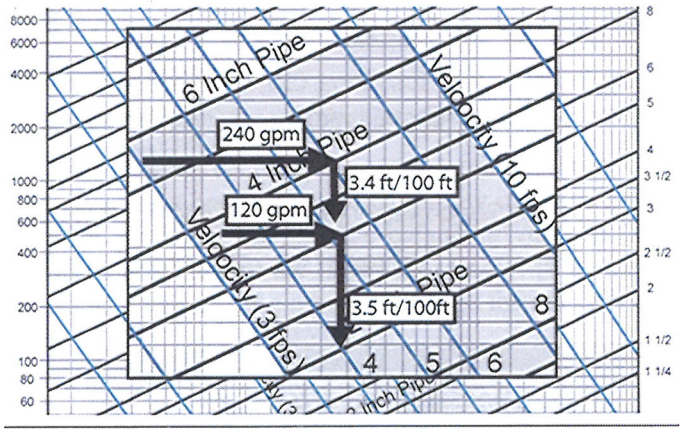

Figure 67

Sizing the Chilled Water Piping Using Chart 1

> ***Pipe Sizes***
>
> ***Note: 4-in. piping was used in lieu of 3.5-in. because 3.5- in. pipe is not readily available. Three-in. piping was used in lieu of 2.5-in.because it was border line on velocity.***

The two air-handling units are piped in parallel so we must use the one that has the highest pressure drop when the piping and AHU pressure drops are summed. Since AHU-2 has the longest length of piping and the coil pressure drop is higher we will use the piping to AHU-2 in our calculation. Referring to Chart 1, (55 tons * 24 ÷ 10 = 132 gpm) we find that 132 gpm intersects the 3-in. line size at 6.0 fps velocity and 4.0-ft of friction per 100 ft of pipe (not shown in the text). Notice the water flow in this circuit is clockwise with the pump pushing water through the chillers. The longest path of water flow starts at point C, goes through the chiller, up to AHU-2, back down through the air separator, to point N and then through pump number 3.

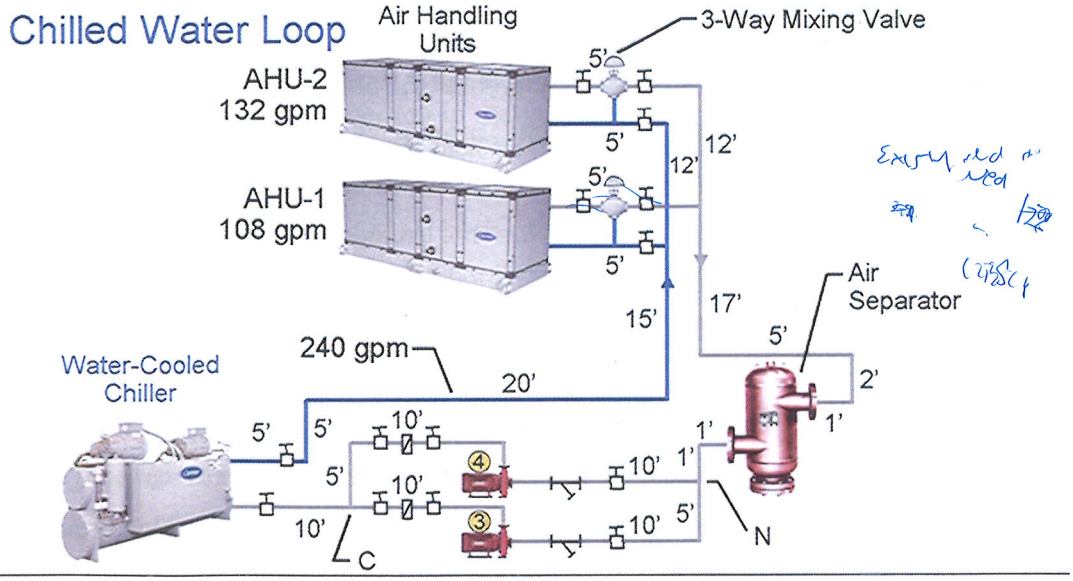

Figure 68

Find longest pressure drop circuit and calculate water flow.

Straight pipe from the example:

3-in. pipe @ pump #3	=	10 + 10 + 5	= 25 ft
3-in. pipe @ AHU #2	=	12 + 5 + 5 + 12	= 34 ft
4-in. pipe (C-N)	=	10 + 5 + 5 + 20 + 15 + 17 + 5 + 2 + 1 + 1 + 1	= 82 ft

3-in. equivalent lengths @ pump (ft)

pipe (from above)	=	25
Std. Ells (qty. of 1 @ 7.67 ft) (Table 6)	=	8
Butterfly Valves (qty. of 3 @ 11.51 ft each) (Table 5)	=	35
Lift Check Valve (qty. of 1 @ 14.06 ft) (Table 5)	=	14
Strainer (qty. of 1 @ 42 ft) (Table 8)	=	42
Total	=	124 ft

3-in. equivalent lengths @ AHU #2 (ft)

pipe (from above)	=	34
Std. Ells (qty. of 2 @ 7.67 ft each) (Table 6)	=	15
Tees (qty. of 1 @ 5.11 ft) (Table 6)	=	5
Butterfly Valves (qty. of 3 @ 11.51 ft each) (Table 5)	=	35
Control Valve, butterfly (qty. of 1 @ 11 ft) (Table 8)	=	11
Total	=	100 ft

4-in. equivalent lengths (ft)

pipe (from above)	=	82
Ells (qty. of 7 @ 10.07 ft each) (Table 6)	=	70
Tees (qty. of 4 @ 6.71 ft each) (Table 6)	=	27
Butterfly Valves (qty. of 2 @ 15.1 ft each) (Table 5)	=	30
Total	=	209 ft

Total Friction Loss = Equivalent ft * loss/100 ft of pipe

For (3-in. pipe @ pump, 124 equiv ft * 3.5 /100) + (3-in. pipe @ AHU #2, 100 equiv. ft * 4 /100) + (4-in. pipe, 209 equiv. ft * 3.4 /100)

Total = 4.22 + 4.0 + 7.32 = 15.54 ft wg

Total Head on Chilled Water Pump (ft wg):

Friction Head	=	15.5
Pressure drop through Cooler	=	12.4
Pressure drop through Air Separator	=	1.3
Pressure drop through AHU #2	=	13.4
Total Head across Pump	=	42.6 ft wg

The chilled water pumps would be based on two pumps of 120 gpm each at 42.6-ft of pressure drop and would be selected like the condenser with the pump manufacturer's selection software. Actual selections are not shown in this example.

At this point, we can add a safety factor of 10 percent because the actual piping installed may not match the initial design. If the system head is slightly oversized the balancing valve at the pump discharge can be used to impose a false head and balance the flow accordingly. If the system head is oversized to a point where the balancing valve at the pump discharge throttles away too much head then the pump impeller should be "trimmed." When an impeller is trimmed, it is physically reduced in size slightly by machining down the blades. This accomplishes a desired reduction in its capabilities.

We now have all the data to do a system volume check and see if a volume tank is necessary for the chilled water system.

ASHRAE Standard 90.1

imposes a limit on maximum pump throttling to no greater than 5% of the nameplate horsepower draw, or 3 hp. Above that, the impeller must be trimmed or the speed reduced. This does not pertain to pump motors of 10 hp or less.

Step 9: Check Evaporator Loop Volume

Required volume rule of thumb for this chiller is approximately 3 gallons per nominal ton. Some chiller loop applications may require higher than 3 gallons per ton, such as process cooling for instance. Some manufacturers do not establish minimum loop volume in terms of gallons per installed ton of chiller. For instance there may be a recommendation that the cooler loop volume be large enough such that it takes at least 4 minutes for the flow to completely move through the entire system. So instead of gallons per ton in that instance, take the gpm flow rate through the chiller and multiply it times 4. That would then be the required minimum loop volume. Always check with the chiller manufacturer for their latest recommendations.

3 gallons per nominal ton * 100 nominal tons = 300 gallons

Therefore, the system must have a water volume of 300 gallons.

4-in. pipe, 82-ft * 5.51 lbs/ft of water (from Table 4 in the appendix) = 452 lbs of water = 54 gallons (water weighs 8.33 lbs/gal)

3-in. pipe, 94 ft * 3.20 lbs/ft of water = 301 lbs of water = 36 gallons

Note: 94 ft of pipe represents all of the 3-in. pipe, not just the pipe used in the head calculation.

Cooler barrel holds 22.6 gallons (from manufacturer's chiller product catalog)

The AHU coil volume should not be taken into consideration since the coil has a 3-way valve and could be bypassed.

Total number of gallons in the system = 54 + 36 + 22.6 = 112.6 gallons.

This system needs a volume tank.

300 gallons required – 112.6 gallons actual = 187.4 gallon volume tank

Piping System Calculator Tool

Shown here is a picture of a well-known pipe sizing and calculator from a major manufacturer of hydronic pumps and accessories. This tool combines the features of the pipe sizing charts into an easy-to-use pre-packaged calculator that many designers and contractors utilize for everyday piping design tasks. The instructions are written right on the calculator.

Some of the functions the calculator perform are:

1. temperature difference and capacity
2. friction loss and velocity
3. pipe length and pressure drop
4. system curve calculation

The same pipe sizes from our example problem for this TDP could have been found on the calculator.

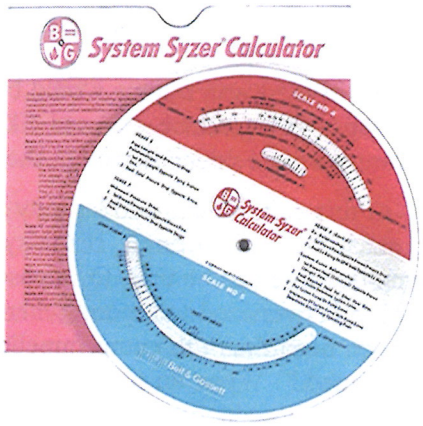

Figure 69

System Syzer® Calculator
Photo courtesy of Bell & Gossett

System Syzer®

To fully appreciate using a calculator, it is best to first understand the methods of pipe sizing as presented in this TDP.

Summary

In this TDP we covered the major topics dealing with water piping. The basic piping systems of closed, open, and once-thru configuration were diagramed.

The four water distribution systems were analyzed and advantages and disadvantages were discussed.

Direct-return and reverse-return options were also covered in detail.

Major piping components, accessories, and typical equipment connection diagrams were presented, along with primary-secondary and variable-primary flow piping designs.

Pump basics and the various types and designs of water pumps were presented, along with a pump comparison summary chart to assist in proper selection.

Finally, a pipe sizing example allowed us to use conventional equivalent length charts and tables to size system piping. An industry hand-held calculator was introduced that could also be utilized instead of the manual charts and tables.

Work Session

1. A chilled water system is a/an _____ loop system.

2. A condenser water system with a cooling tower is a/an _____ loop system.

3. Name 4 types of valves that can be used for flow control duty?

   1. _____
   2. _____
   3. _____
   4. _____

4. What are the 3 types of valves that can be used for shutoff duty?

   1. _____
   2. _____
   3. _____

5. What is the price and equivalent pressure drop in feet for a butterfly, globe, gate and ball valve of 6-in. size?

Valve	Price	Pressure Drop (ft)
Butterfly		
Globe		
Gate		
Ball		

6. What determines the need for a volume tank in a closed-loop system?

   _____

   _____

7. Sketch a typical piping detail for a pump. Label accessories and note their functions.

8. Should the pump be pushing or pulling water through the chiller evaporator and condenser? _____

9. In a closed-loop system with a flow of 300 gpm, what size chilled water line should be used? _____ What is the water velocity? _____ What is the friction loss in ft of water/100 ft of pipe? _____

10. If you have 3 pumps in parallel and the system flow is 400 gpm @ 60ft. of hd, what is the flow through each pump? _____ What is the head at each pump? _____

11. Which piping system offers true simultaneous heating and cooling without mixing of the hot and cold water flows? _____

12. When should there be concern regarding NPSH?

_____

_____

13. What type of water control valve would be used on the coils in a variable flow chilled-water system? _____

14. What kind of water control valve is used in a conventional constant flow primary-secondary system? _____

15. Which piping system required a seasonal "changeover" from cooling to heating and vice versa? _____

Appendix

References

Bell & Gossett, Morton Grove, IL. http://www.bellgossett.com/

Flexicraft Industries, Chicago, IL. http://www.flexicraft.com/

Weiss Instruments, Inc., Holtsville, NY. http://www.weissinstruments.com/

Cleaver-Brooks, Milwaukee, WI. http://www.cbboilers.com/

Charts and Tables

Chart 1 – Friction Loss for Closed Pipe

Chart 2 – Friction Loss for Open Piping System Schedule 40 Steel

Chart 3 – Friction Loss for Closed and Open Copper Tubing System

Table 4 – Physical Properties of Steel Pipe

Table 5 – Friction Loss of Valves in Equivalent Length of Straight Pipe (Feet)

Table 6 – Friction Loss of Pipe Fittings in Equivalent Feet of Straight Pipe

Table 7 – Special Fitting Losses in Equivalent Feet of Straight Pipe

Table 8 – Control Valves and Strainer Losses in Equivalent Feet of Straight Pipe

Chart 1 - Friction Loss for Closed-Loop System Schedule 40 Steel

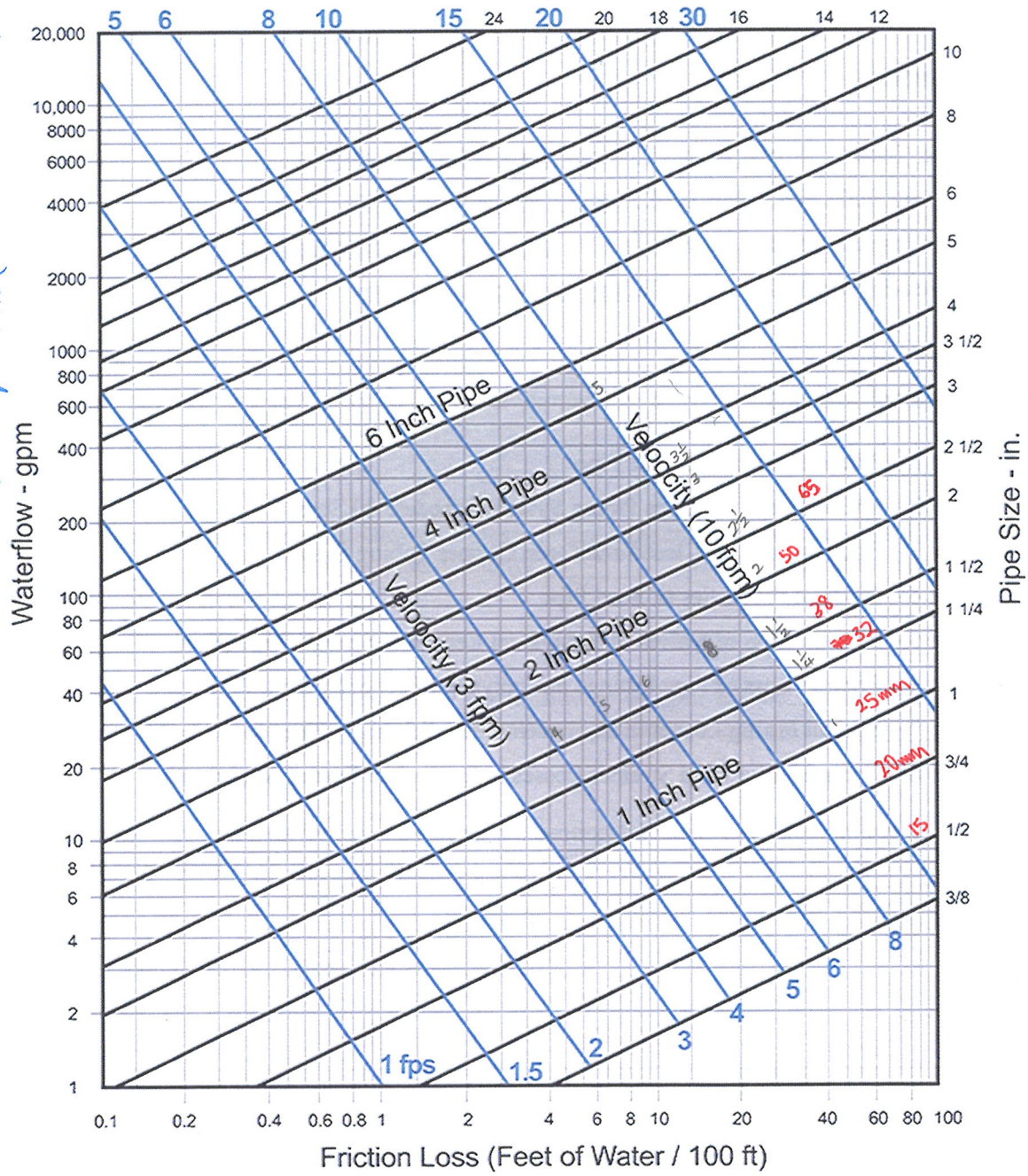

100 T = 240 GPM

X 0.06 ≈ 1 = L/S . Gallon Per Min

Filing Factor higher → open condenser . loop

Chart 2 - Friction Loss for Open-Loop System Schedule 40 Steel

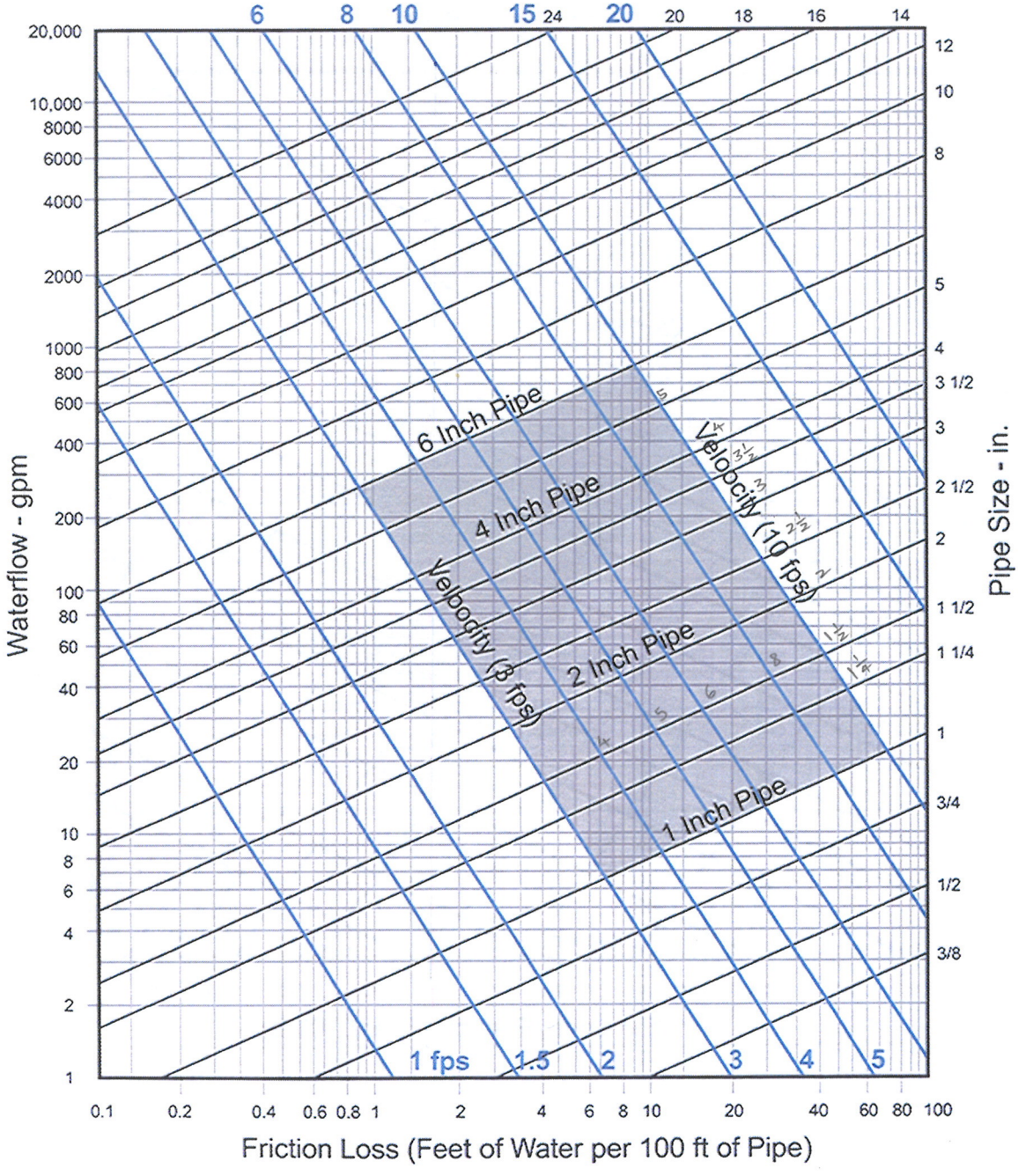

4 inc 10 ft/100

1" 9.3 ft/100ft

Chart 3 - Friction Loss for Open and Closed Copper Piping System

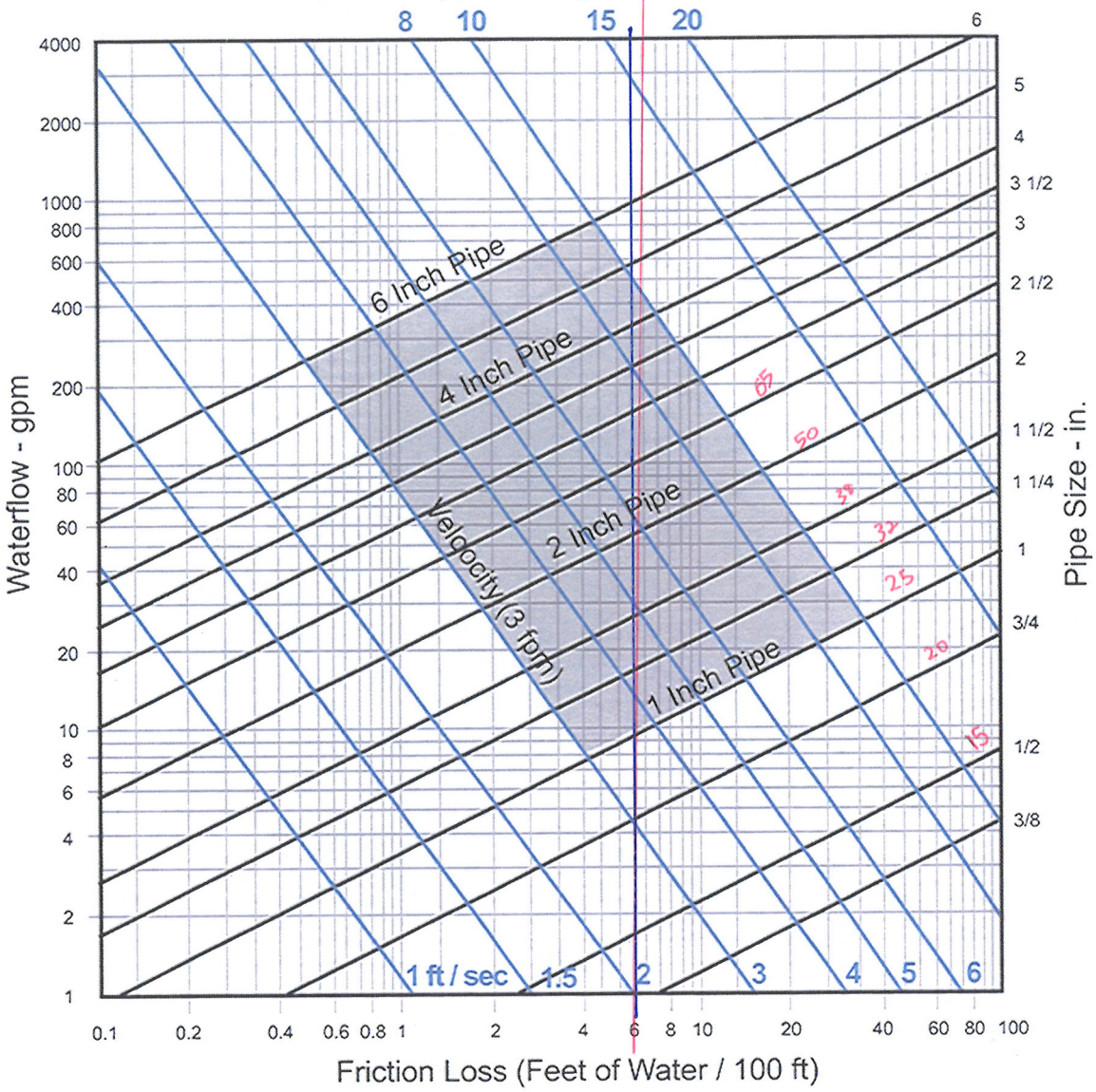

TABLE 4, PHYSICAL PROPERTIES OF STEEL PIPE

NOM. PIPE SIZE (in.)	SCHEDULE NO.	OUTSIDE DIAM (in.)	INSIDE DIAM (in.)	WALL THICKNESS (in.)	WEIGHT OF PIPE (lb/ft)	WT OF WATER IN PIPE* (lb/ft)	OUTSIDE SURFACE (sq ft/ft)	INSIDE SURFACE (sq ft/ft)	TRANS-VERSE AREA (sq in.)
1/8	40(S)	0.405	0.269	0.068	0.244	0.0246	0.106	0.0705	0.0568
	80(X)	0.405	0.215	0.095	0.314	0.0157	0.106	0.0563	0.0364
1/4	40(S)	0.540	0.364	0.088	0.424	0.0451	0.141	0.0955	0.1041
	80(X)	0.540	0.302	0.119	0.535	0.0310	0.141	0.0794	0.0716
3/8	40(S)	0.675	0.493	0.091	0.567	0.0827	0.177	0.1295	0.1910
	80(X)	0.675	0.423	0.126	0.738	0.0609	0.177	0.1106	0.1405
1/2	40(S)	0.840	0.622	0.109	0.850	0.1316	0.220	0.1637	0.3040
	80(X)	0.840	0.546	0.147	1.087	0.1013	0.220	0.1433	0.2340
3/4	40(S)	1.050	0.824	0.113	1.130	0.2301	0.275	0.2168	0.5330
	80(X)	1.050	0.742	0.154	1.473	0.1875	0.275	0.1948	0.4330
1	40(S)	1.315	1.049	0.133	1.678	0.3740	0.344	0.2740	0.8640
	80(X)	1.315	0.957	0.179	2.171	0.3112	0.344	0.2520	0.7190
1 1/4	40(S)	1.660	1.380	0.140	2.272	0.6471	0.434	0.3620	1.495
	80(X)	1.660	1.278	0.191	2.996	0.5553	0.434	0.3356	1.283
1 1/2	40(S)	1.900	1.610	0.145	2.717	0.8820	0.497	0.4213	2.036
	80(X)	1.900	1.500	0.200	3.631	0.7648	0.497	0.3927	1.767
2	40(S)	2.375	2.067	0.154	3.652	1.452	0.622	0.5401	3.355
	80(X)	2.375	1.939	0.218	5.022	1.279	0.622	0.5074	2.953
2 1/2	40(S)	2.875	2.469	0.203	5.790	2.072	0.753	0.6462	4.788
	80(X)	2.875	2.323	0.276	7.660	1.834	0.753	0.6095	4.238
3	40(S)	3.500	3.068	0.216	7.570	3.20	0.916	0.802	7.393
	80(X)	3.500	2.900	0.300	10.25	2.86	0.916	0.761	6.605
3 1/2	40(S)	4.000	3.548	0.226	9.110	4.28	1.047	0.929	9.89
	80(X)	4.000	3.364	0.318	12.51	3.85	1.047	0.880	8.89
4	40(S)	4.500	4.026	0.237	10.79*	5.51	1.178	1.055	12.73
	80(X)	4.500	3.826	0.337	14.98	4.98	1.178	1.002	11.50
5	40(S)	5.563	5.047	0.258	14.62	8.66	1.456	1.321	20.01
	80(X)	5.563	4.813	0.375	20.78	7.87	1.456	1.260	18.19
6	40(S)	6.625	6.065	0.280	18.97	12.51	1.735	1.587	28.99
	80(X)	6.625	5.761	0.432	28.57	11.29	1.735	1.510	26.07
8	40(S)	8.625	7.981	0.322	28.55	21.6	2.26	2.090	50.0
	80(X)	8.625	7.625	0.500	43.39	19.8	2.26	2.006	45.6
10	40(S)	10.750	10.020	0.365	40.48	34.1	2.81	2.62	78.9
	60(X)	10.750	9.750	0.500	54.70	32.4	2.81	2.55	74.7
	80	10.750	9.564	0.593	64.33	31.1	2.81	2.50	71.8
12	30(S)	12.750	12.090	0.330	43.80	49.6	3.34	3.17	115.0
	40	12.750	11.938	0.406	53.53	48.5	3.34	3.13	111.9
	(X)	12.750	11.750	0.500	65.40	46.9	3.34	3.08	108.0
	80	12.750	11.376	0.687	88.51	44.0	3.34	2.98	101.6
14	30(S)	14.0	13.250	0.375	54.60	59.8	3.67	3.46	138.0
	40	14.0	13.125	0.438	63.37	58.5	3.67	3.44	135.3
	(X)	14.0	13.000	0.500	72.10	55.8	3.67	3.40	133.0
	80	14.0	12.500	0.750	106.31	51.2	3.67	3.27	122.7
16	30(S)	16.0	15.250	0.375	62.40	79.1	4.18	3.99	183.0
	40(X)	16.0	15.000	0.500	82.77	76.5	4.18	3.93	176.7
	80	16.0	14.314	0.843	136.46	69.7	4.18	3.75	160.9
18	(S)	18.0	17.250	0.375	70.60	100.8	4.71	4.52	234.0
	(X)	18.0	17.000	0.500	93.50	98.3	4.71	4.45	227.0
	40	18.0	16.874	0.562	104.75	97.2	4.71	4.42	224.0
	80	18.0	16.126	0.937	170.75	88.5	4.71	4.22	204.2
20	20(S)	20.0	19.250	0.375	78.60	126.7	5.24	5.04	291.0
	30(X)	20.0	19.000	0.500	104.20	122.5	5.24	4.97	284.0
	40	20.0	18.814	0.593	122.91	120.4	5.24	4.93	278.0
	80	20.0	17.938	1.031	208.87	109.4	5.24	4.70	252.7
24	20(S)	24.0	23.250	0.375	94.60	184.6	6.28	6.08	426.0
	(X)	24.0	23.000	0.500	125.50	179.0	6.28	6.03	415.0
	40	24.0	22.626	0.687	171.17	174.2	6.28	5.92	402.1
	80	24.0	21.564	1.218	296.36	158.2	6.28	5.65	365.2

Data from Crane Technical Bulletin No. 410 –1991, reprint pages B-16 thru B-19

To change "Wt of Water in Pipe (lb/ft)" to "Gallons of Water in Pipe (gal/ft)," divide values in table by 8.34.

(S) is designation of standard wall pipe.

(X) is designation of extra strong wall pipe.

Table 5 - Friction Loss of Valves in Equivalent Length of Straight Pipe (Feet)

Nominal Pipe or Tube Size	Actual ID Steel Pipe, inches	Friction Factor, f	Screwed and flanged gate valves β=1, θ=0	Screwed and flanged globe valves, β =1	45 Swing check valve, β =1	90 deg swing check valve, β =1	90 deg flanged angle valve, β =1	90 deg weld angle valve β=1	45 deg weld angle valve β=1	45 deg weld lift check valve β=1	Plug valve striaght way β=1	3 way plug valves β=1		Ball Valve β=1, θ=0	Butterfly Valve, centered disc
												thru	branch		
3/8	0.493	0.028	0.33	13.97	4.11	2.05	6.16	2.26	2.26	2.26	0.74	1.23	3.70	0.12	-
1/2	0.622	0.027	0.41	17.62	5.18	2.59	7.78	2.85	2.85	2.85	0.93	1.56	4.67	0.16	-
3/4	0.824	0.025	0.55	23.35	6.87	3.43	10.30	3.78	3.78	3.78	1.24	2.06	6.18	0.21	-
1	1.049	0.023	0.70	29.72	8.74	4.37	13.11	4.81	4.81	4.81	1.57	2.62	7.87	0.26	-
1 1/4	1.380	0.022	0.92	39.10	11.50	5.75	17.25	6.33	6.33	6.33	2.07	3.45	10.35	0.35	-
1 1/2	1.610	0.021	1.07	45.62	13.42	6.71	20.13	7.38	7.38	7.38	2.42	4.03	12.08	0.40	-
2	2.067	0.019	1.38	58.57	17.23	8.61	25.84	9.47	9.47	9.47	3.10	5.17	15.50	0.52	7.75
2 1/2	2.469	0.018	1.65	69.96	20.58	10.29	30.86	11.32	11.32	11.32	3.70	6.17	18.52	0.62	9.26
3	3.068	0.018	2.05	86.93	25.57	12.78	38.35	14.06	14.06	14.06	4.60	7.67	23.01	0.77	11.51
3 1/2	3.548	0.018	2.37	100.53	29.57	14.78	44.35	16.26	16.26	16.26	5.32	8.87	26.61	0.89	13.31
4	4.026	0.017	2.68	114.07	33.55	16.78	50.33	18.45	18.45	18.45	6.04	10.07	30.20	1.01	15.10
5	5.047	0.016	3.36	143.00	42.06	21.03	63.09	23.13	23.13	23.13	7.57	12.62	37.85	1.26	18.93
6	6.065	0.015	4.04	171.84	50.54	25.27	75.81	27.80	27.80	27.80	9.10	15.16	45.49	1.52	22.74
8	7.981	0.014	5.32	226.13	66.51	33.25	99.76	36.58	36.58	36.58	11.97	19.95	59.86	2.00	29.93
10	10.020	0.014	6.68	283.90	83.50	41.75	125.25	45.93	45.93	45.93	15.03	25.05	75.15	2.51	29.23
12	11.938	0.013	7.96	338.24	99.48	49.74	149.23	54.72	54.72	54.72	17.91	29.85	89.54	2.98	34.82
14	13.124	0.013	8.75	371.85	109.37	54.68	164.05	60.15	60.15	60.15	19.69	32.81	98.43	3.28	38.28
16	15.000	0.013	10.00	425.00	125.00	62.50	187.50	68.75	68.75	68.75	22.50	37.50	112.50	3.75	31.25
18	16.876	0.012	11.25	478.15	140.63	70.32	210.95	77.35	77.35	77.35	25.31	42.19	126.57	4.22	35.16
20	18.814	0.012	12.54	533.06	156.78	78.39	235.18	86.23	86.23	86.23	28.22	47.04	141.11	4.70	39.20
24	22.628	0.012	15.09	641.13	188.57	94.28	282.85	103.71	103.71	103.71	33.94	56.57	169.71	5.66	47.14

NOTES

1. All valves assumed in wide open position.
2. Flow assumed to be in **fully turbulent region** of Moody Diagram
3. The friction factor f is assumed **constant** over the fully turbulent region.
4. r/d=bend radius divided by fitting inside diameter.
5. Equivalent length values calculated from equations in 1991 Crane Technical Paper 410 pages A27-A29.
6. β = ratio of diameter of fitting to diameter of pipe
7. θ = angle of entrance and exit to fitting
8. For **ball valves and butterfly valves** use manufacturers Cv values if available, otherwise use equivalent length values above for preliminary estimatic

Table 6 - Friction Loss of Pipe Fittings in Equivalent Feet of Straight Pipe

Nominal Pipe or Tube Size, inches	Actual ID Steel Pipe, inches	Friction Factor f	45 deg std elbow	90 Deg Std elbow	Long radius 90 deg elbow	Std tee thru flow	Std tee branch flow	Reducing tee thru flow		90 deg weld elbow		Mitre Bend	
										r/d=1	r/d=2		
								1/4	1/2			45 deg	90 deg
3/8	0.493	0.028	0.66	1.23	0.66	0.82	2.47	1.09	1.27	-	-	-	-
1/2	0.622	0.027	0.83	1.56	0.83	1.04	3.11	1.38	1.60	-	-	-	-
3/4	0.824	0.025	1.10	2.06	1.10	1.37	4.12	1.83	2.12	-	-	-	-
1	1.049	0.023	1.40	2.62	1.40	1.75	5.25	2.33	2.70	-	-	-	-
1 1/4	1.380	0.022	1.84	3.45	1.84	2.30	6.90	3.06	3.55	-	-	-	-
1 1/2	1.610	0.021	2.15	4.03	2.15	2.68	8.05	3.57	4.14	-	-	-	-
2	2.067	0.019	2.76	5.17	2.76	3.45	10.34	4.58	5.31	3.45	2.07	2.58	10.34
2 1/2	2.469	0.018	3.29	6.17	3.29	4.12	12.35	5.47	6.35	4.12	2.47	3.09	12.35
3	3.068	0.018	4.09	7.67	4.09	5.11	15.34	6.80	7.89	5.11	3.07	3.84	15.34
3 1/2	3.548	0.018	4.73	8.87	4.73	5.91	17.74	7.86	9.12	5.91	3.55	4.44	17.74
4	4.026	0.017	5.37	10.07	5.37	6.71	20.13	8.92	10.35	6.71	4.03	5.03	20.13
5	5.047	0.016	6.73	12.62	6.73	8.41	25.24	11.19	12.98	8.41	5.05	6.31	25.24
6	6.065	0.015	8.09	15.16	8.09	10.11	30.33	13.44	15.60	10.11	6.07	7.58	30.33
8	7.981	0.014	10.64	19.95	10.64	13.30	39.91	17.69	20.52	13.30	7.98	9.98	39.91
10	10.020	0.014	13.36	25.05	13.36	16.70	50.10	22.21	25.76	16.70	10.02	12.53	50.10
12	11.938	0.013	15.92	29.85	15.92	19.90	59.69	26.46	30.70	19.90	11.94	14.92	59.69
14	13.124	0.013	17.50	32.81	17.50	21.87	65.62	29.09	33.75	21.87	13.12	16.41	65.62
16	15.000	0.013	20.00	37.50	20.00	25.00	75.00	33.25	38.57	25.00	15.00	18.75	75.00
18	16.876	0.012	22.50	42.19	22.50	28.13	84.38	37.41	43.39	28.13	16.88	21.10	84.38
20	18.814	0.012	25.09	47.04	25.09	31.36	94.07	41.70	48.38	31.36	18.81	23.52	94.07
24	22.628	0.012	30.17	56.57	30.17	37.71	113.14	50.16	58.18	37.71	22.63	28.29	113.14

NOTES:

1. Flow assumed to be in **fully turbulent region** of Moody Diagram
2. The friction factor f is assumed **constant** over the fully turbulent region.
3. r/d=bend radius divided by fitting inside diameter.
4. Equivalent length values calculated from equations in 1991 Crane Technical Paper 410 pages A27-A29.

Table 7 Special Fitting Loses in Equivalent Feet of Straight Pipe

Nominal Pipe Diameter, inches	Actual Inside Diameter, inches	Friction Factor f	Sudden Enlargement,d/D			Sudden Contraction,d/D			Pipe Entrance		Pipe Exit		
			1/4	1/2	3/4	1/4	1/2	3/4	Projecting	Flush (SE)	Projecting	Flush(SE)	Rounded
3/8	0.493	0.028	1.29	0.83	0.28	0.69	0.55	0.32	1.14	0.73	1.47	1.47	1.47
1/2	0.622	0.027	1.69	1.08	0.37	0.90	0.72	0.42	1.50	0.96	1.92	1.92	1.92
3/4	0.824	0.025	2.41	1.55	0.53	1.29	1.03	0.60	2.14	1.37	2.75	2.75	2.75
1	1.049	0.023	3.34	2.14	0.73	1.78	1.43	0.83	2.96	1.90	3.80	3.80	3.80
1 1/4	1.380	0.022	4.59	2.94	1.00	2.45	1.96	1.14	4.08	2.61	5.23	5.23	5.23
1 3/4	1.610	0.021	5.62	3.59	1.22	2.99	2.40	1.40	4.98	3.19	6.39	6.39	6.39
2	2.067	0.019	7.97	5.10	1.74	4.25	3.40	1.98	7.07	4.53	9.07	9.07	9.07
2 1/2	2.469	0.018	10.05	6.43	2.19	5.36	4.29	2.50	8.92	5.72	11.43	11.43	11.43
3	3.068	0.018	12.48	7.99	2.72	6.66	5.33	3.11	11.08	7.10	14.20	14.20	14.20
3 1/2	3.548	0.018	14.44	9.24	3.14	7.70	6.16	3.59	12.81	8.21	16.43	16.43	16.43
4	4.026	0.017	17.35	11.10	3.78	9.25	7.40	4.32	15.39	9.87	19.74	19.74	19.74
5	5.047	0.016	23.10	14.79	5.03	12.32	9.86	5.75	20.50	13.14	26.29	26.29	26.29
6	6.065	0.015	29.61	18.95	6.45	15.79	12.64	7.37	26.28	16.85	33.69	33.69	33.69
8	7.981	0.014	41.75	26.72	9.09	22.27	17.81	10.39	37.05	23.75	47.51	47.51	47.51
10	10.02	0.014	52.42	33.55	11.42	27.96	22.37	13.05	46.52	29.82	59.64	59.64	59.64
12	11.938	0.013	67.26	43.05	14.65	35.87	28.70	16.74	59.69	38.26	76.53	76.53	76.53
14	13.124	0.013	73.94	47.32	16.10	39.44	31.55	18.40	65.62	42.06	84.13	84.13	84.13
16	15.000	0.013	84.51	54.09	18.40	45.07	36.06	21.03	75.00	48.08	96.15	96.15	96.15
18	16.876	0.012	103.00	65.92	22.43	54.93	43.95	25.64	91.41	58.60	117.19	117.19	117.19
20	18.814	0.012	114.83	73.49	25.01	61.24	48.99	28.58	101.91	65.33	130.65	130.65	130.65
24	22.628	0.012	138.11	88.39	30.08	73.66	58.93	34.37	122.57	78.57	157.14	157.14	157.14

Notes:

1. Equivalent loss values calculated from data in 1991 Crane Technical Paper 410 pages A27-A29 and based on smaller pipe diameter.
2. SE = sharp edge
3. Ratio d/D = diameter of smaller pipe divided by larger pipe

Table 8 - Control Valves and Strainer Losses in Equivalent Feet of Straight Pipe

Nominal Pipe Diameter, inches	Actual Inside Diameter, inches	Nominal Valve Size, inches	Friction Factor f	Butterfly Valve[1,3]		Ball Valves[1,3]		Globe Valves[1,3]		Y-Strainers[6]	
				$\beta = 1.0^{4,5}$	$\beta < 1.0^{2}$	$\beta = 1.0^{4,5}$	$\beta < 1.0^{2}$	$\beta = 1.0^{4,5}$	$\beta < 1.0^{2}$	Flanged	Screwed
3/8	0.493	~	0.028	~	~	0.12	~	14	~	~	
1/2	0.622	~	0.027	~	~	0.16	~	18	~	~	
3/4	0.824	~	0.025	~	~	0.21	~	23	~	~	
1	1.049	~	0.023	~	~	0.26	~	30	~	~	5
1 1/4	1.380	~	0.022	~	~	0.35	~	39	~	~	9
1 3/4	1.610	~	0.021	~	~	0.40	~	46	~	~	
2	2.067	~	0.019	8	~	0.52	~	59	~	27	14
2 1/2	2.469	2	0.018	8	9	0.62	2	59	61	28	20
3	3.068	2 1/2	0.018	9	11	0.77	2	70	72	42	
3 1/2	3.548	3	0.018	12	13	0.77	2	86	88	48	~
4	4.026	3	0.017	12	16	1.01	5	114	117	60	~
5	5.047	4	0.016	15	19	1.26	5	143	146	80	
6	6.065	4	0.015	19	22	1.52	12	172	179	110	~
8	7.981	6	0.014	23	39	2.00	11	226	237	150	
10	10.020	8	0.014	30	46	2.51	12	284	294	190	
12	11.938	10	0.013	29	35	2.98	11	338	346	250	~
14	13.124	12	0.013	35	38	3.28	11	372	379	~	~
16	15.000	14	0.013	38	42	3.75	12	425	431	~	
18	16.876	16	0.012	31	44	4.22	12	478	484	~	~
20	18.814	18	0.012	35	61	4.70	25	533	543	~	~
24	22.628	20	0.012	39	82	5.66	39	641	671	~	

Notes:

1. Equivalent loss values calculated from data in 1991 Crane Technical Paper 410 pages A27-A29.
2. Calculations based on method of ANSI/ISA-S75.01(R1995)-valve assumed one size smaller than pipe and includes reducer l ses.
3. Values are for estimating only. Check with valve manufacturer for specific details.
4. β = diameter ratio of valve to pipe. β =1 valve and pipe same diameter and assumed full bore.
5. Control valves with β=1 may have reduced ports or shaped discs for improved control which will increase loss more than full bore values.
6. Strainer clean- no dirt. For dirty strainers multiply values by 2.

Work Session Answers

1. closed

2. open

3. butterfly, globe, angle, plug

4. butterfly, gate, ball

5.

Valve	Price	Pressure Drop (ft)
Butterfly	220	22.74
Globe	2500	171.80
Gate	1000	4.04
Ball	375	1.52

6. The amount of water volume in the chilled water system when compared to the manufacturer's requirement of typically 3 gallons per ton of installed chiller for comfort air conditioning or 6-10 gallons per ton for process cooling.

7. See Figure 35, Pump Piping Detail.

8. Pushing is considered better since the heat of the pump can be picked up in the cooler or condenser as opposed to going into the piping system after the equipment.

9. 4,-in. 3-1/2-in. is not a common size. Velocity is 8 fps. Approximately 5 ft per 100 ft of pipe is the friction loss.

10. 133.33 gpm; 60 ft of head

11. 4-pipe system

12. When the NPSH at the pump suction is less that the NPSH required at the pump. This is most likely to occur if the cooling tower is located a distance beneath the condenser water pump.

13. 2-way modulating valve

14. 3-way mixing valve

15. 2-pipe

Prerequisites:

	Color Book	Instructor Presentation	Title
TDP-102	796-026	797-026	ABCs of Comfort
TDP-103	796-027	797-027	Concepts of Air Conditioning
TDP-201	796-030	797-030	Psychrometrics Level 1 - Introduction
TDP-301	796-034	797-034	Load Estimating Level 2 - Fundamentals

Learning Objectives:

After reading this module, participants will be able to:

- Compare the three types of piping systems.
- Identify the four types of water distribution systems.
- Differentiate between direct return and reverse return systems.
- Identify the various valves and hydronic accessories available for use in piping systems.
- Diagram typical piping hookups for chillers, pumps, and cooling towers.
- Size the piping for a closed-loop and an open recirculating loop system.
- Identify the types of water pumps, their features, and the selection process.

Supplemental Material:

	Instructor Presentation	Title
Calculator	Bell & Gossett	System Syzer® Calculator

Instructor Information

Each TDP topic is supported with a number of different items to meet the specific needs of the user. Instructor materials consist of a CD-ROM disk that includes a PowerPoint™ presentation with convenient links to all required support materials required for the topic. This always includes: slides, presenter notes, text file including work sessions and work session solutions, quiz and quiz answers. Depending upon the topic, the instructor CD may also include sound, video, spreadsheets, forms, or other material required to present a complete class. Self-study or student material consists of a text including work sessions and work session answers, and may also include forms, worksheets, calculators, etc.



Carrier Corporation
Technical Training
800 644-5544
www.training.carrier.com

Form No. TDP-502
Supersedes T200-33

Cat. No. 796-043
Superse de s 791-033