TEXT & REFERENCE

Carrier
A United Technologies Company

TECHNICAL DEVELOPMENT PROGRAM

AIR CONDITIONING SYSTEM DESIGN

ROOM AIR DISTRIBUTION

- Principles
- Components
- Application

Copyright © Carrier Corporation 1987

T200-24B

Catalog No. 791-224

TABLE OF CONTENTS

		PAGE
I	INTRODUCTION	1
II	STANDARDS FOR SATISFACTORY CONDITIONS	1
III	JET CHARACTERISTICS	3
	A. ISOTHERMAL - FREE SPACE	3
	B. NONISOTHERMAL - FREE SPACE	3
	C. DEFLECTION VANES	5
	D. CEILING EFFECT	6
	E. THROW AND DROP FOR CONFINED SPACES	6
	F. OPPOSING JET STREAMS	7
	G. PARALLEL JET STREAMS	8
	H. CEILING HEIGHT	8
	I. RADIAL JETS	9
	J. CURRENTS, STAGNANT ZONES	9
IV	SUPPLY OUTLET TYPES	10
	A. GRILLES	10
	B. CEILING DIFFUSERS	11
	C. SLOT DIFFUSERS	12
	D. PERFORATED CEILING PANELS	13
	E. OUTLETS INSTALLED ON DUCTWORK	13
V	OUTLET PERFORMANCE (MAPPING) BASED ON LOCATION	14
VI	RETURNS	23
VII	GENERAL OUTLET SELECTION PROCEDURE	25
VIII	SELECTION DOUBLE DEFLECTION GRILLE (HIGH SIDEWALL)	27
IX	SELECTION OF SLOT DIFFUSERS	37
	A. PERPENDICULAR FLOW	37
	B. PARALLEL FLOW	40
X	SELECTION OF CEILING DIFFUSERS	46
XI	SOUND	52
XII	APPENDIX	57

TECHNICAL DEVELOPMENT PROGRAM

AIR DISTRIBUTION

INTRODUCTION

Room air distribution is one of the most important segments of the air conditioning system. For instance, excellent distribution of air within the room can compensate to a large extent for a minor deficiency in capacity. But no level of excellence in the refrigeration or air supply systems can compensate for poorly designed room air distribution.

The mission of the designer of room air distribution is to assure a proper combination of air temperature and motion in the occupied zone to assure comfortable conditions. Discomfort may arise from excessive room air temperature variations, excessive air motion (drafts), failure to deliver adequate air to local cold or hot spots, or too rapid a fluctuation of room temperature or air motion (gusts). Furthermore, it should be recognized that there is a difference in density between the air in the room and the air being supplied. During summer, the supply air is cooler and more dense than room air and tends to drop due to gravity. During winter heating the opposite is true. The distribution design must accommodate all these considerations, and at an unobtrusive sound level as well.

This is a large order. It is understandable that many air conditioning systems are no more than adequate insofar as air distribution is concerned. If the system designer recognizes the pitfalls, on the other hand, and applies sound judgement in accommodating them, he will achieve good results consistently.

STANDARDS FOR SATISFACTORY CONDITIONS

The object of air distribution is to create an acceptable combination of temperature and air motion in the occupied zone of the conditioned room, usually considered to be from the floor to 6 ft. above floor level. Considerable investigation has been conducted into the effects of each of the variables by a number of laboratories. Generally the conclusions reached may be stated as follows:

1. No conditions will satisfy everyone. Even with the most carefully designed and controlled system, a small percentage of people will complain of feeling cold or warm.

OCCUPIED ZONE ROOM AIR VELOCITIES

ROOM AIR VELOCITY (Fpm)	REACTION	RECOMMENDED APPLICATION
0 - 16	Complaints about stagnant air	None
25	Ideal design — favorable	All Commercial Applications
25 - 50	Probably favorable but 50 fpm is approaching maximum tolerable velocity for seated persons	All Commercial Applications
65	Unfavorable — light papers are blown off a desk	
75	Upper limits for people moving about slowly — favorable	Retail and Dept. Store
75 - 300	Some factory air conditioning installations — favorable	Factory air conditioning higher velocities for spot cooling

Figure 1

2. Air velocity will be sensed by a person exposed to it as a feeling of coolness, which may be offset by increasing the air temperature. If the air temperature is 1F higher for each 15 FPM increase in velocity, most persons feel equally comfortable.

3. Variations of up to 4F in space temperature and air velocities between 15 FPM and 50 FPM are considered acceptable by at least 85% of the population, providing sudden changes are avoided.

4. Temperature changes or high air velocity has considerably more effect on comfort when applied to the neck region of a human subject than when applied to the ankle region. The neck region is twice as sensitive.

5. Still air does not remove heat quickly enough to avoid a feeling of "stuffiness" on the part of the subject exposed to it.

These conclusions can be reduced to rules which, if followed, will result in conditions within the occupied zone which are comfortable to a very high percentage of people in non-industrial environments:

1. Limit temperature variations to a maximum of 4F.

2. Maintain general air motion between 15 and 50 fpm.

In industrial environments higher air velocities are sometimes permissible or even favorable. The above table (Figure 1) gives information that may be used for various environments.

ISOTHERMAL JETS - FREE SPACE

Understanding the behavior of jets is necessary to properly select and locate supply outlets. Figure 2 shows

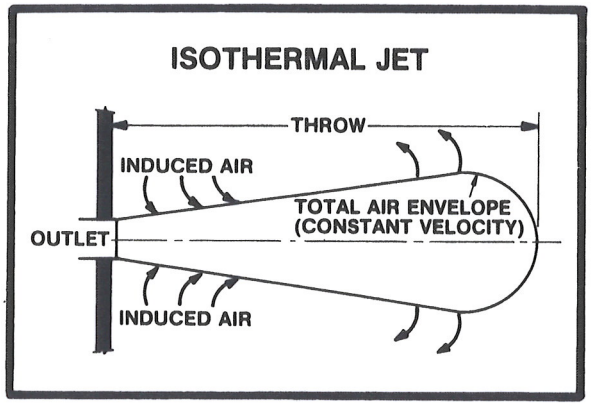

Figure 2

an axial jet of air exiting from an outlet with an air temperature equal to the surrounding air temperature (isothermal air). Shortly after the high velocity primary air leaves the outlet it induces surrounding air into the air stream. This total air envelope then assumes the shape of an expanding cone as it enters a free space (no obstructions).

As the cone expands the velocity of the air within decreases. Throw is defined as the distance to any measured velocity, (terminal velocity) along the centerline of the cone. The total air envelope defines all points on the wall of the cone where the air velocity is the same value.

Manufacturers generally publish throw values for 150 FPM, 100 FPM and 50 FPM terminal velocites. Maximum throw occurs at 50 FPM terminal velocity. Minimum throw occurs at 150 FPM.

Surprisingly the air stream assumes a cone shape shortly after leaving the outlet regardless of the shape of the outlet, and lends itself to mathematical prediction of throw; prediction of the amount of secondary air induced into the total air envelop; and prediction of the velocity patterns along any cross section of the jet.

Analysis and experimentation reveals that the performance of any outlet is related to the initial velocity of the air as it exits the outlet and the area of the outlet. Doubling the initial velocity will double the throw and double the amount of air induced into the jet.

The throw for a given initial velocity also increases as the area of the outlet increases. More detailed information on the predictability of isothermal jets can be found in the ASHRAE Guide and Data Book.

NON ISOTHERMAL JETS - FREE SPACE

Heating or cooling applications of free jets involves the use of primary air whose temperature is warmer or colder respectively than the surrounding room air. This difference in

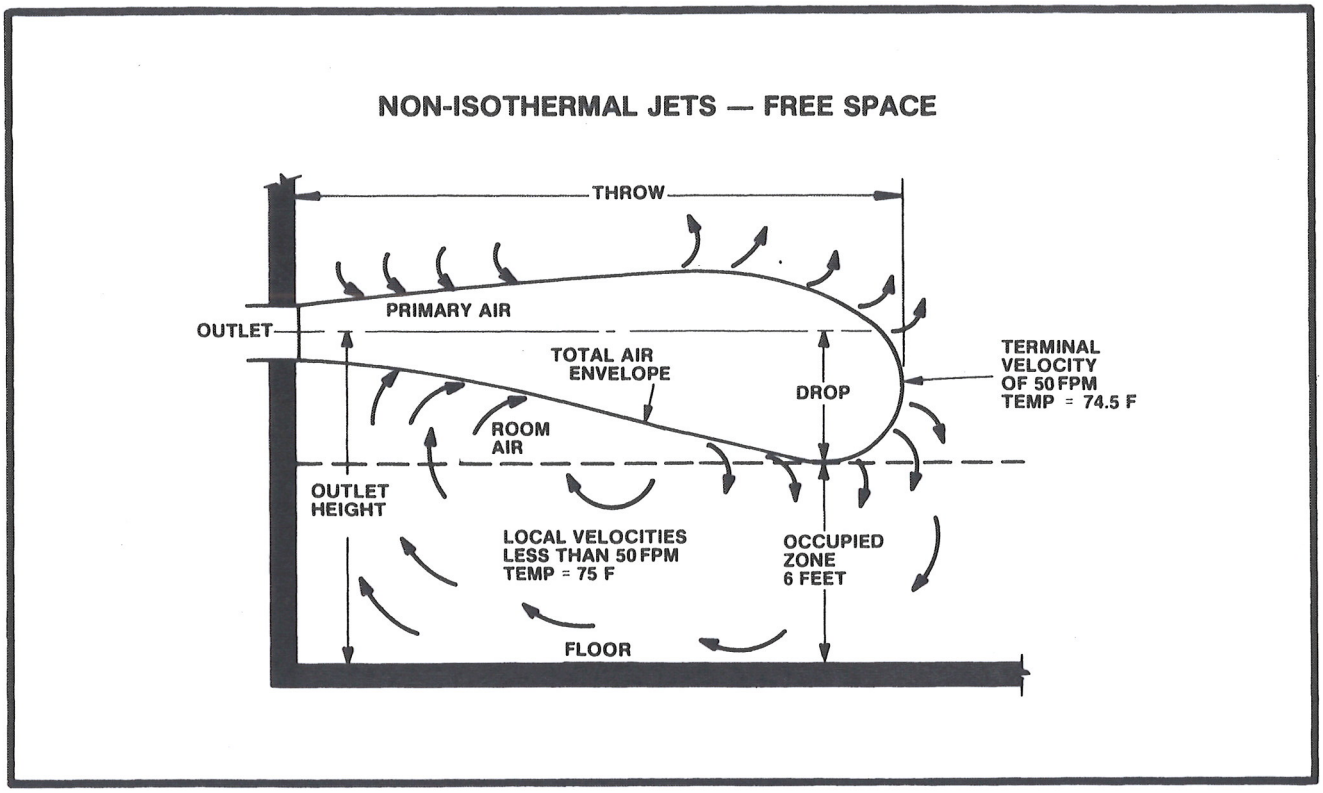

Figure 3

temperature between the primary and room air is called outlet Δt.

As the jet progresses into the room (Figure 3) primary air mixes with room air absorbing the room load. Thus the further away the jet is from the outlet, the closer the jet temperature is to room temperature. Generally the jet temperature will be within 0.5F to 0.8F when the terminal velocity reaches 50 FPM.

Since the two regions of air in the room are at different temperatures, a density difference also exists. This difference in densities causes bouyant forces which result in the total air envelope dropping or rising from the outlet centerline. The bouyant effect will take place whenever the jet centerline velocity falls below 150 FPM. With velocities greater than 150 FPM the momentum of the jet will overcome any bouyant forces and keep the flow horizontal.

Little published research work is available to accurately predict actual throw and drop once the nonisothermal jet has dropped below 150 FPM. Thus reliance must be placed on outlet manufacturers published data which reflects tested performance of individual products.

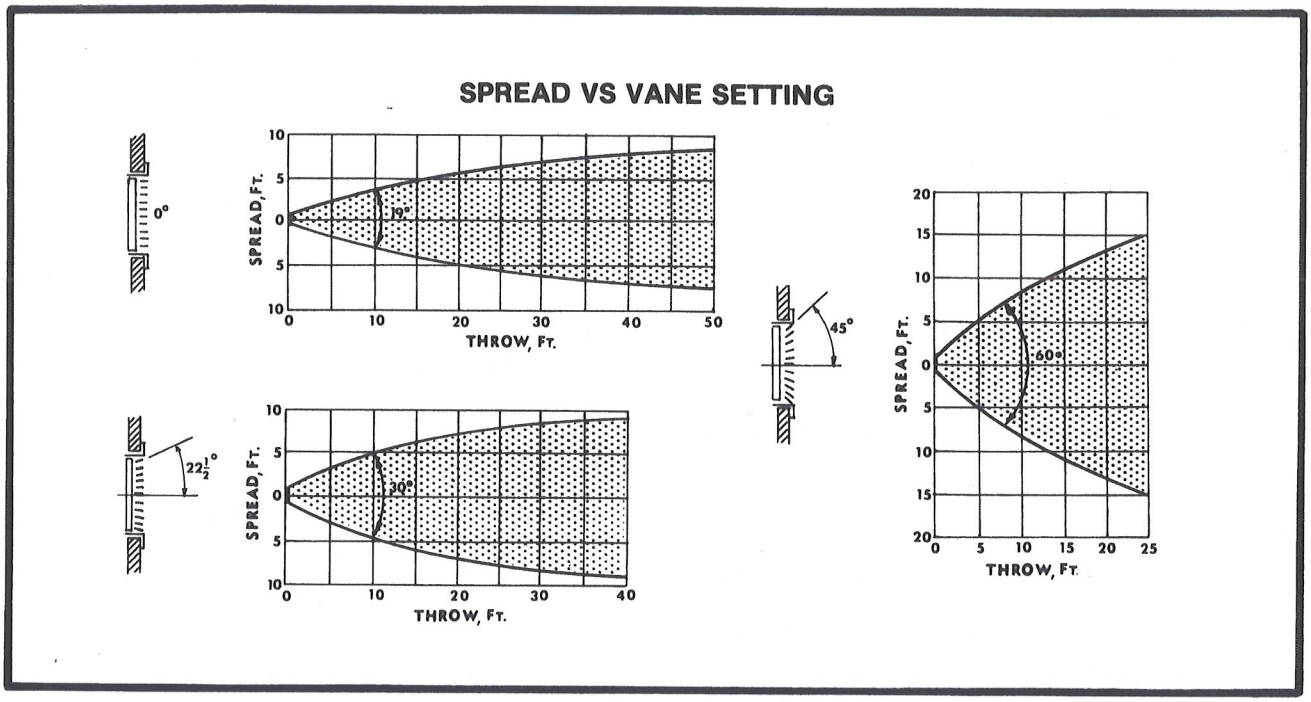

Figure 4

Figure 3 shows the general impact on room air motion caused by a non-isothermal jet. With an outlet applied as shown the occupied zone velocities will be within an acceptable range of 15 FPM to 50 FPM, and the air temperature within the occupied zone will be relatively constant. Allowing the total air envelope at 50 FPM to fall into the occupied zone will create local velocities greater than 50 FPM with complaints of drafts. Thus the outlet must be located above the occupied zone at a height equal to the expected drop. This information is commonly available since manufacturers rate outlet performance on the basis of throw, drop, outlet velocity, and outlet Δt.

Obviously the opposite effect occurs during heating. After slowing to 150 FPM the total air envelope rises. Careful attention must therefore be paid to this when selecting heating outlets, and particularly when the outlets must both heat and cool.

EFFECT OF DEFLECTION VANES

When deflection vanes in the outlet are set at angles to give a fanning or flaring effect, both throw and drop are reduced. Short throws and minimum drop can be achieved by using small quantities of air (multiple outlets) and spreading the air. Figure 4 shows the impact of deflection vanes for one manufacturers outlet. As the deflection angle increases the spread of

the jet pattern also increases. Since the phenomenon does not lend itself readily to mathematical analysis, manufacturers test data should be used to predict spread.

EFFECT OF WALLS AND CEILINGS

The discussion of throw and drop has thus far been limited to free space applications. If the jet is projected parallel to and within a few inches of a wall or ceiling (Figure 5) the jet

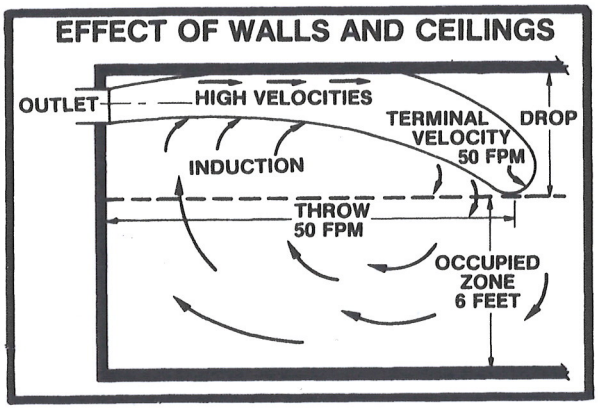

Figure 5

will take on the form of a half cone. The cone size will be as if the jet were emanating from an outlet twice the area of the actual outlet. Essentially the same flow must now be distributed thru one half of a larger cone. Maximum velocities will remain close to the surface, creating a low pressure region between the jet and the surface. Thus the jet hugs the surface while induction is limited to the free side of the jet. The net result is that compared to free space projection the throw of the jet will be increased, and the drop for horizontal projections decreased as the jet is pushed toward the surface by the rush of induced air.

When outlets are not located within one foot of the surface, increased surface effect can be obtained by directing the flow of the jet towards the surface.

This effect will be manifested as long as the angle of discharge between the jet and the surface is less than 40° and the outlet is within two feet of the surface. The closer the jet is to the surface, the more the effect.

It is good practice to make use of this effect in selecting outlets since it tends to keep the total air envelope out of the occupied zone, and thus improves overall room air motion.

THROW AND DROP FOR CONFINED SPACES

For most applications primary air is supplied in such a way that the total air envelope doesn't enter the occupied zone. It is practical, however, in many applications to consider the region within 1 foot of the walls as also being outside the occupied zone. The total air envelope will project

along the walls as shown in Figure 6. In this case generally acceptable high air velocities will occur within a four inches of the wall. The velocity will rapidly fall off as the distance away from the wall increases. Average air motion within the occupied zone

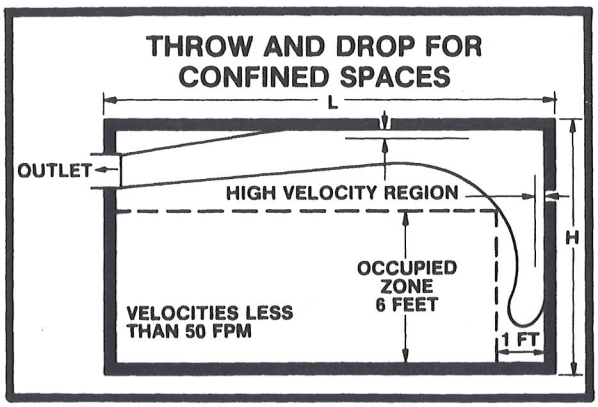

Figure 6

will necessarily be less than the terminal velocity at the end of the throw.

Thus the acceptable throw in Figure 6 would be L + H. Another benefit in using the walls in this manner is the lack of need to be concerned with drop from overhead. The jet velocities will be high enough to keep the air up along the ceiling.

IMPACT OF OPPOSING JETS

When two jets are blowing at each other, the air from either jet behaves just as if it had struck a vertical wall. After colliding the two streams project downward in a vertical plane with a high velocity region at the center (see Figure 7). The downward vertical projection is acceptable as long as it does not protrude into the occupied zone.

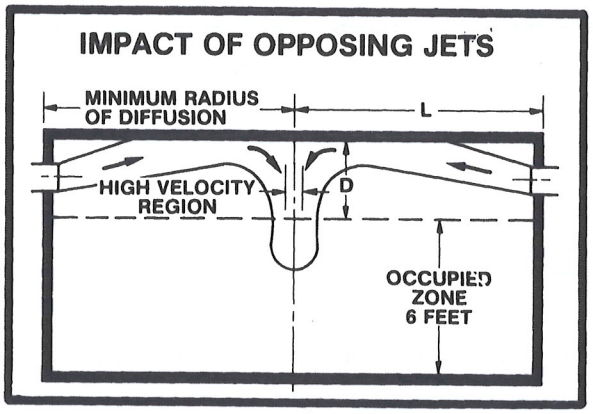

Figure 7

Generally the acceptable throw at 50 FPM terminal velocity would be equal to the sum of the horizontal distance "L" plus the vertical distance "D". Some manufacturers account for this effect by publishing minimum radius of diffusion or minimum throw figures. Thus the distance between two outlets should be no less than twice the published minimum throw data.

Conversely the maximum distance two outlets could be separated would be twice the published throw values at 50 FPM. This would insure that neither of the two jets would drop into the occupied zone. Each jet would perform as shown in Figure 8.

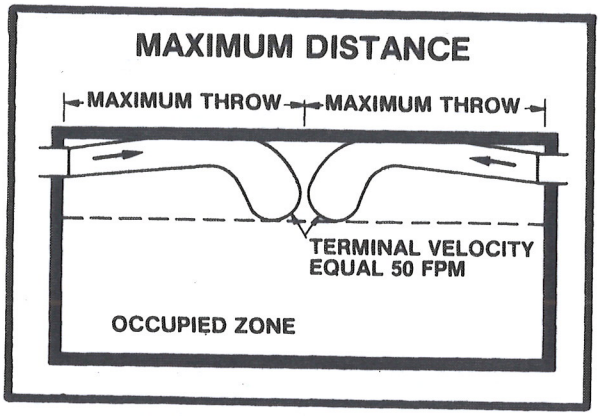

Figure 8

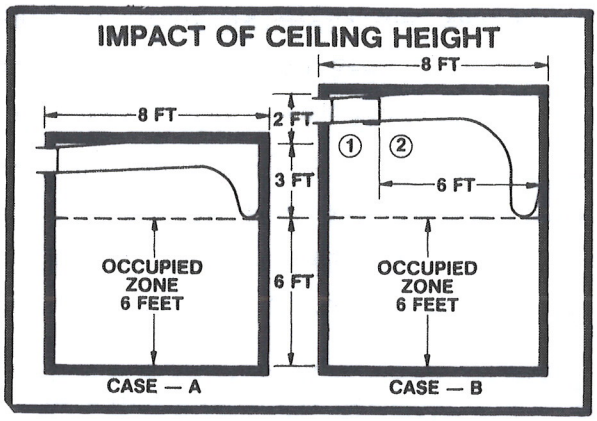

Figure 10

OUTLETS IN PARALLEL

When two jets (Figure 9) located at a minimum distance "D" are discharging in parallel, each has a maximum velocity core, and each behaves independently until it reaches a distance "L" where the two interfere.

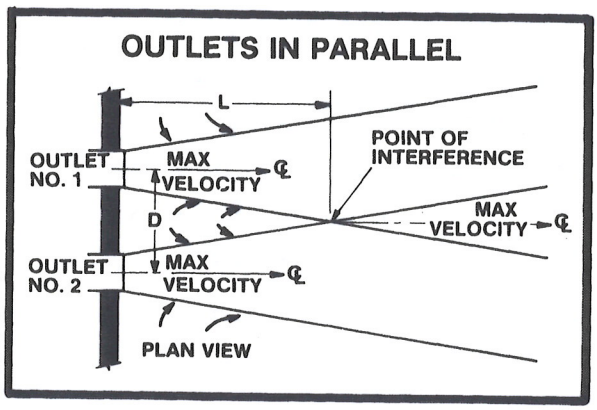

Figure 9

Up to the point of interference the maximum velocities lie along the centerline of each jet. Past the point of interference the maximum velocity then occurs on a line midway between the outlets. At this point a secondary jet conical profile is formed which behaves as if it were emanating from an outlet twice the size of either of the actual outlets. The net result of the mixing under these conditions is that the throw of the two parallel jets exceeds that of one individually and likewise the drop increases.

The minimum distance "D" is a function of outlet spread pattern, "outlet type, and outlet velocity. Thus, manufacturers data must be used to ascertain this distance. "D" can range from zero up to 20 feet depending upon the variables listed above.

IMPACT OF CEILING HEIGHT

Most manufacturers rate their outlets based on 9 Ft. occupied heights. With a 6 Ft. occupied zone, this leaves 3 Ft. above the ceiling to allow for jet performance.

Figure 10 shows two rooms with identical 8 Ft. x 6 Ft. occupied zones. In case "A" an outlet would have to be selected with a maximum throw of 8 + 3 = 11 Feet. Should the ceiling be raised 2 additional feet, there is now more room for the jet to drop before entering the occupied zone. Thus the outlet (No. 1 in case B) could be selected with a maximum throw of 8 + 3 + 2 = 13 Feet.

As a rule of thumb, the outlet maximum allowable throw can be increased by one foot for every foot of additional ceiling height above 9 Feet.

Outlets are also rated with minimum throw distances which usually correspond to 150 FPM terminal velocity. At 9 Ft. ceiling height no wall or opposing jet should be closer than this minimum value. However, as the ceiling height increases, this minimum throw value may be decreased by one foot for every foot of ceiling height.

For example, let's assume the outlet in case "A" has a minimum throw of 8 Ft. Using the same outlet (No. 2 in case "B") in a room with an 11 Foot ceiling would allow the outlet to be located 8 - 2 = 6 Feet away from the wall. Under no circumstances however should a wall or opposing jet be placed any closer than 50% of the rated minimum throw (8 x 0.5 = 4 Ft. in this example).

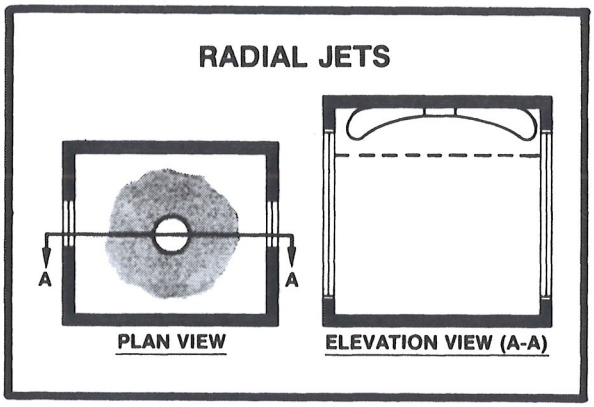

Figure 11

RADIAL JETS

In a radial jet air is projected outward from the outlet in a 360° pattern. A cross sectional view of the jet in Figure 11 reveals that the jet shape and therefore performance is similar to an axial jet projecting from a single outlet. Thus the previous illustrations relating to axial jets also apply to radial jets.

CURRENTS, STAGNANT ZONES

Natural convection currents rise from warm surfaces or internal loads, and fall from cool surfaces. The process forms "pools" of stagnant air near the ceiling or floor. Air velocities within these currents and pools are usually low - less than 20 FPM. Within the pools the air stratafies in layers of increasing temperatures from

a low to a high level. The temperature gradiants within the stagnant regions of the room will be larger than in any other region of a room supplied by an air jet. When exposed to stagnant regions, people perceive themselves as uncomfortable, Although ASHRAE test studies show that 85% of the people will be satisfied as long as the temperature gradiant within the occupied zone does not exceed 4F.

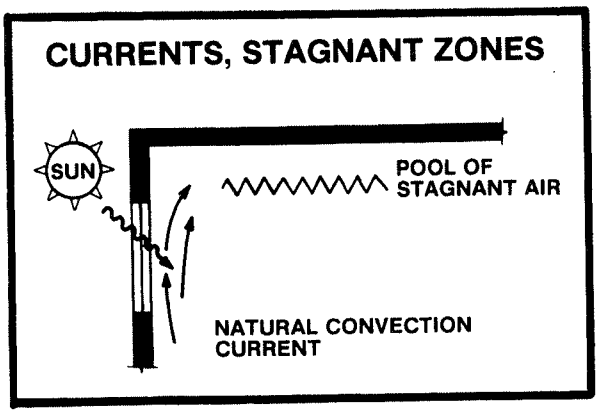

Figure 12

Figure 12 shows the formation of a warm stagnant region caused by a warm outside wall. The stagnant zone can only be broken up or prevented by projecting a cool jet of air into the stagnant air. The reverse would be true for a cool stagnant region near the floor.

Natural convection currents can also be overcome by projecting a high velocity jet (greater than 150 FPM) into the bouyant air. With velocities less than this the bouyant forces caused by differing air densities will overcome the momentum of the jet.

SUPPLY OUTLET TYPES

Supply outlets are classified both by their location in a room (i.e., high sidewall), and by their physical configuration. This section will deal with the physical types of outlets.

Four basic types of supply outlets are commonly available. They are (1) grilles, (2) ceiling diffusers, (3) slot diffusers, and (4) perforated ceiling panels. Each type has individual construction features, physical configurations and air pattern performance that distinguish one from another.

GRILLE OUTLETS

The most common grille outlet used is an adjustable bar grille (Figure 13). A single deflection grille consists of a frame enclosing a single set of either horizontal or vertical vanes. A double deflection grille has a second set of vanes installed behind and at right angles to the face vanes. Vanes may be either fixed or adjustable. Accessory dampers may be installed directly behind the grille forming a combination called a register.

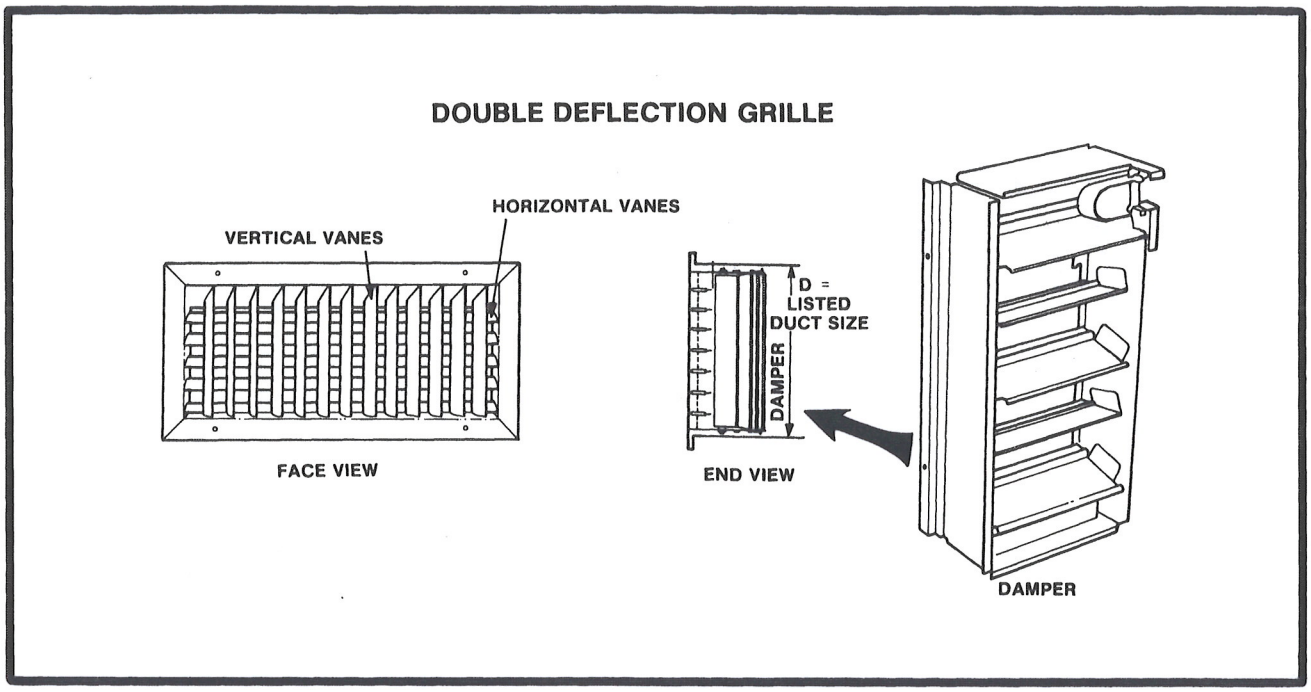

Figure 13

APPLICATION

Properly selected grilles operate satisfactorily from high sidewall locations; perimeter locations in the windowsill, curb, or floor; and ceiling locations. Ceiling grilles can contain face turning vanes which direct the air along the ceiling locations. Otherwise their normal construction directs the air downward into the occupied zone.

CEILING DIFFUSER OUTLETS

Ceiling diffusers consist of flaring rings or louvers which form a series of concentric air passages. They are available in round, square, or rectangular shape (Figure 14) with a variety of discharge air patterns. For easy installation these diffusers are usually made in two parts: an outer cone or shell with a duct collar and an easily removed inner cone assembly. The series of cones either project down into the space as shown in the typical construction view of Figure 14, or all cones extend only to the depth of the standard outer cone.

Adjustable pattern diffusers are available to change the air discharge pattern from horizontal to vertical and vice versa. This is accomplished by the special construction of the diffuser itself or the use of an accessory deflection device. Multi-pattern diffusers are square or rectangular in shape and have special

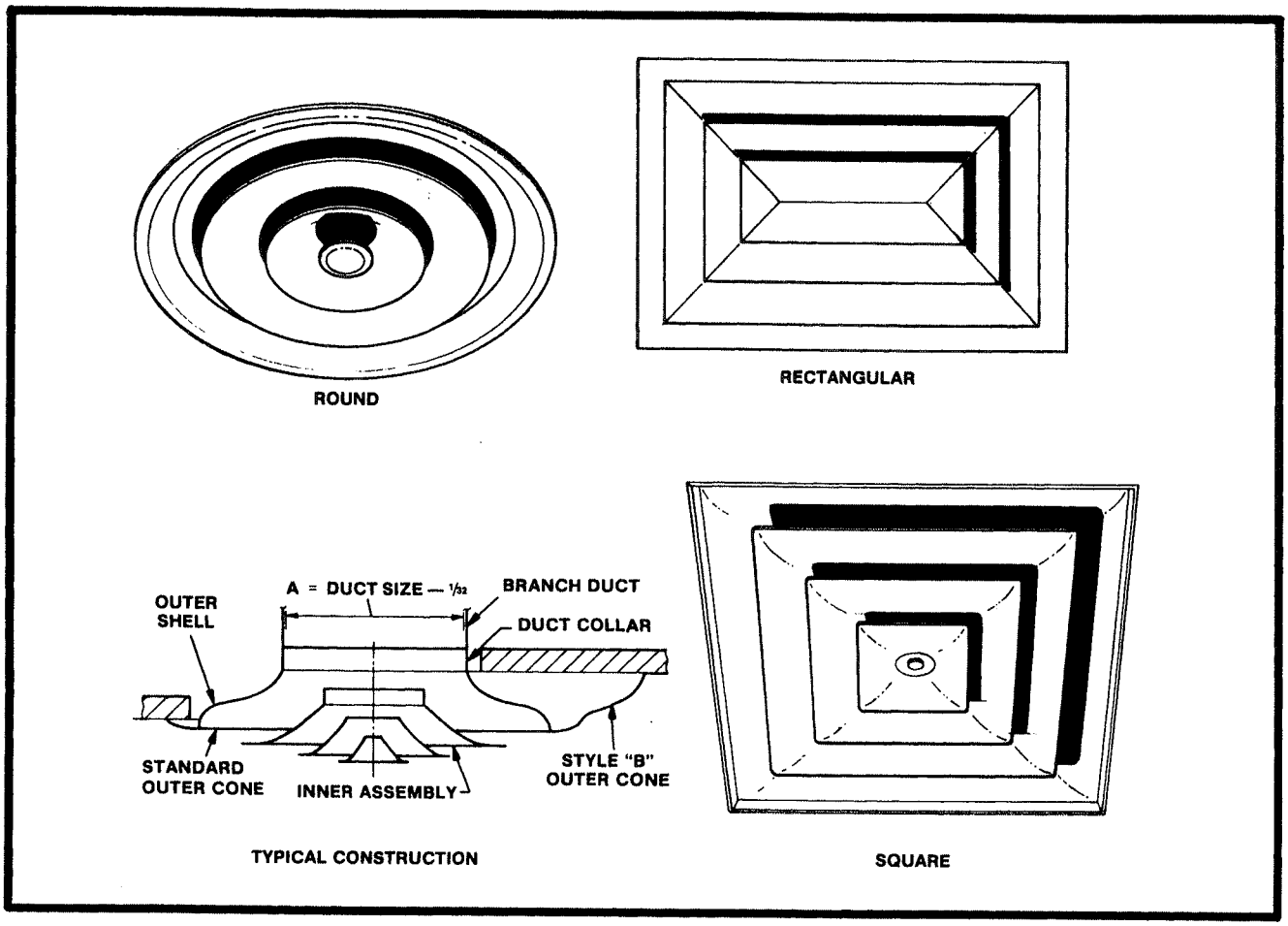

Figure 14

louvers or core assemblies to discharge air simultaneously in one or more directions. Damper and straightening vane assemblies are available as accessories.

APPLICATION

Depending on the discharge pattern ceiling diffusers can be located in several ceiling locations, high sidewall locations or on exposed ductwork.

SLOT DIFFUSER OUTLETS

A slot diffuser (Figure 15) is an elongated outlet consisting of a single or multiple number of slots. Depending on the application it is available in lengths of 2,3,4, or 5 feet; or it can be installed in long continuous lengths. Outlets with a dimensional aspect ratio of 25 to 1 or greater with a maximum height of approximately 3 inches, generally meet the performance criteria for slots.

Slots are available with adjustable flow equalization vanes installed behind and at right angles to the slot which improve the discharge pattern of the diffuser. Damper assemblies are also available as an integral part of the slots for flow adjustment.

APPLICATION

Slot diffusers perform well in high sidewall locations; ceiling; or perimeter windowsill, curb, or floor locations. They also are used successfully as an integral part of recessed flourescent light fixtures.

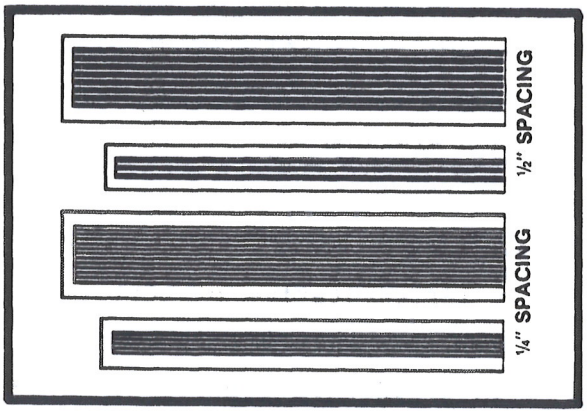

Figure 15

PERFORATED CEILING PANELS

Perforated ceiling air diffusers (Figure 16) are designed to be used as lay in tiles in a "T" bar or perforated ceiling. The outlet consists of a square or rectangular flat perforated panel thru which air may discharge vertically. Also an adaptor may be installed which houses directional deflectors to create horizontal air patterns along the ceiling.

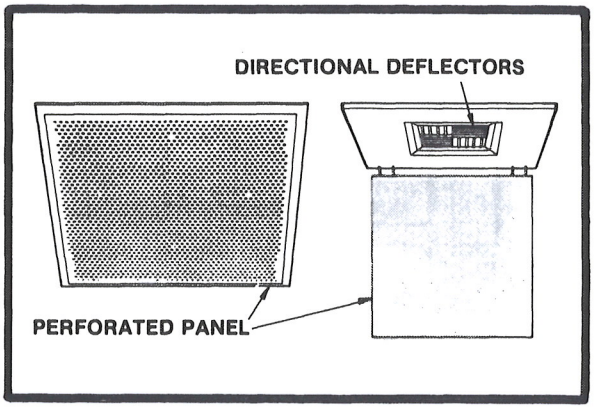

Figure 16

OUTLETS INSTALLED ON DUCTWORK

Care must be exercised when an outlet is located on or close to the main supply duct. The left hand side of Figure 17 shows that the air leaving the duct will tend to pile into the downstream side of the outlet resulting in uneven and gusty distribution. Clearly the air must be straightened before entering the outlet. This is typically accomplished with straightening vanes and volume extractors. The right hand side of Figure 17 shows a grille assembly with the accessories necessary for mounting the grille on a duct. Accessories similar in function if not in shape are available for all types of outlets. The volume extractor (usually adjustable) uses curved

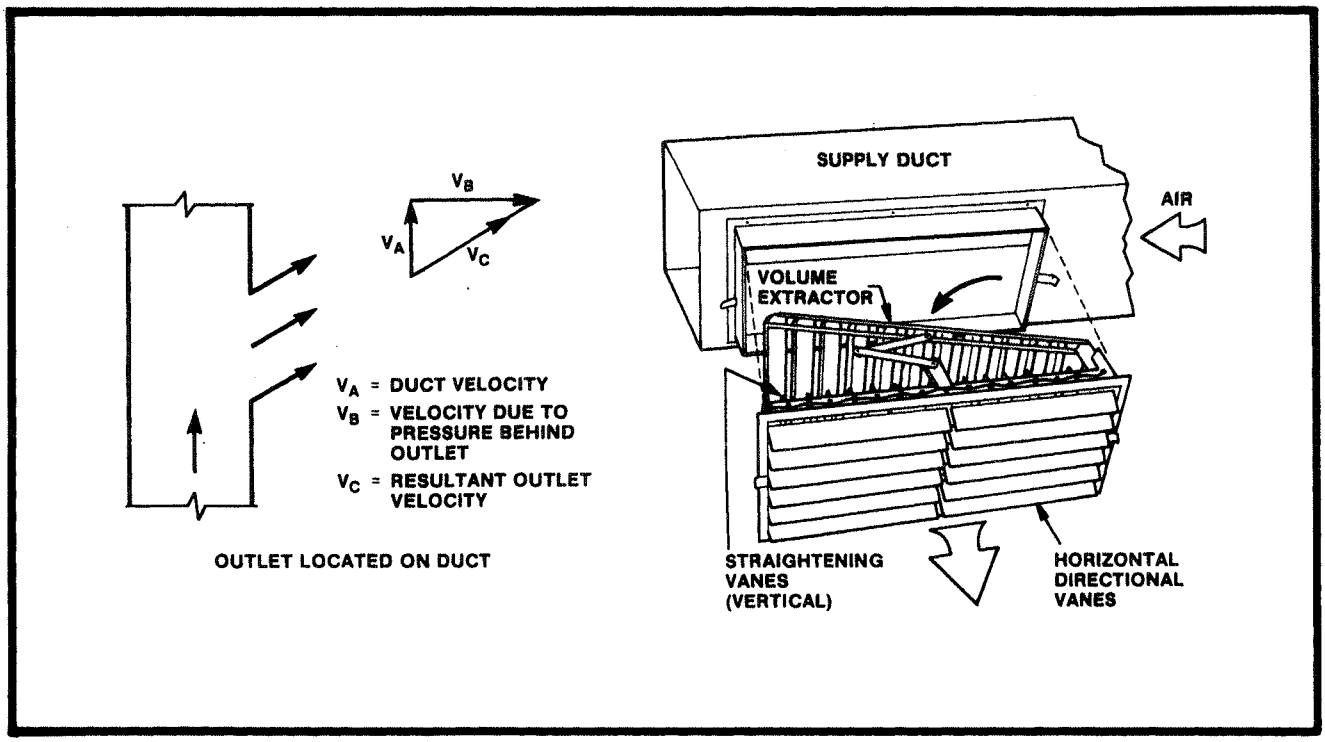

Figure 17

vanes to scoop the air out of the duct and start it turning toward the outlet. Straightening vanes then direct the air in a direction perpendicular to the outlet face. Use of accessories such as these insure optimum performance.

OUTLET PERFORMANCE BASED ON LOCATION

Figures 18 through 24 represent the results of outlet performance tests conducted at the University of Illinois Engineering Experiment Station. They serve as a helpful guide in visualizing the flow patterns caused by different types of outlets when discharging cool or warm air from various locations in the conditioned space.

GROUP "A" OUTLETS

The flow patterns shown in Figure 18 are representative of performance for a group of similar outlets including high sidewall grilles, sidewall diffusers, sidewall slots, ceiling diffusers, and linear ceiling diffusers.

HIGH SIDEWALL OUTLET

During cooling the high sidewall outlet shows a condition of overblow caused by the use of the opposite wall as part of the jet projection. The

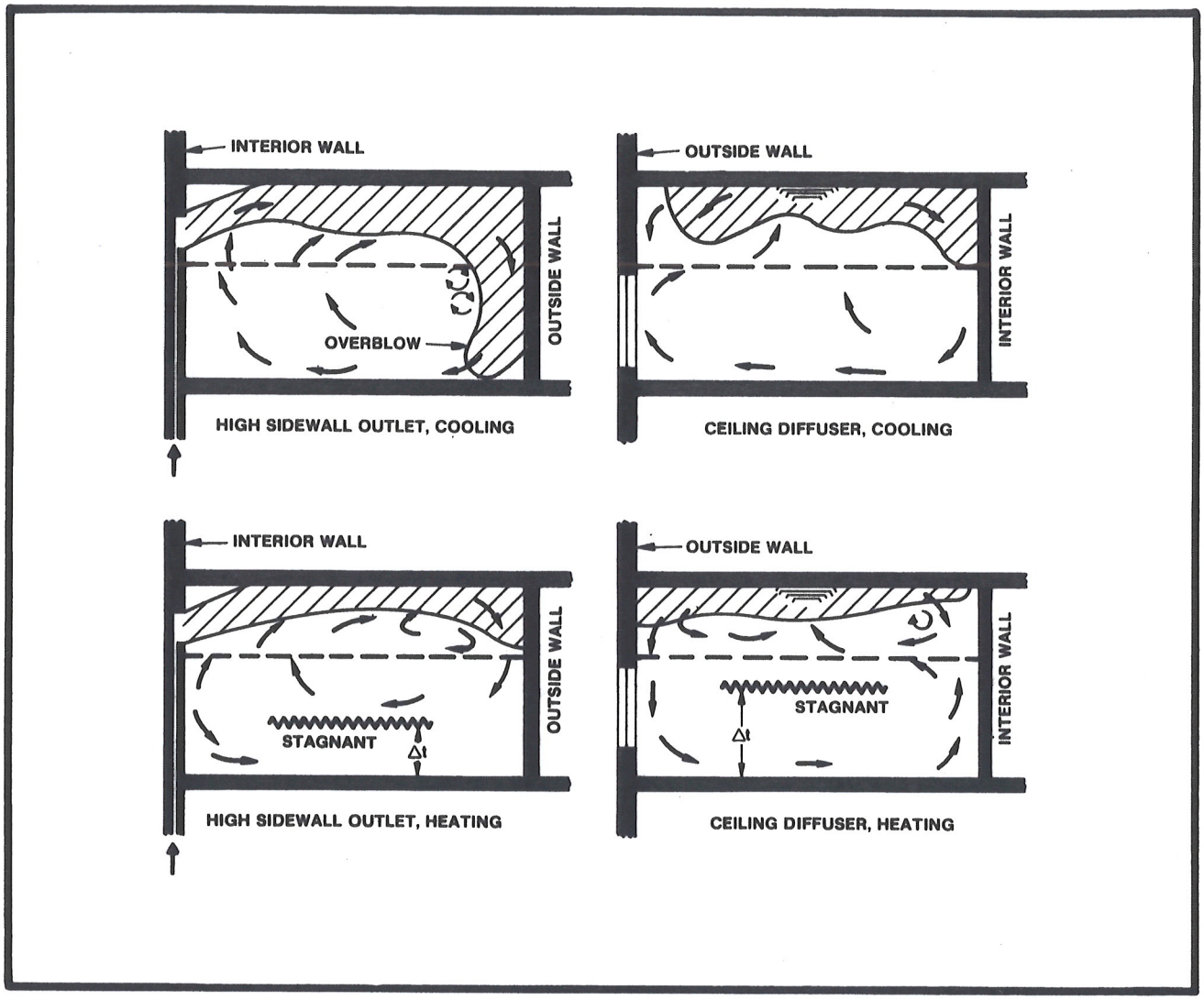

Figure 18

total air drops along the outside wall and flows slowly for some distance across the floor. High velocities on the order of 150 FPM may be found along the wall, but will dissipate within about four inches of the wall. In many applications this condition may be perfectly acceptable by considering the occupied zone to start one foot in from the outside wall. Good air mixing occurs within the occupied zone, and no stagnant areas exist.

During heating the outlet delivers the same CFM and the total air envelope does not descend along the wall. Even though the outlet flow rate is the same as that shown for cooling, the bouyant warm air forces acting on the jet are stronger than the jet momentum. The bouyant warm air causes the air envelope to curl back toward the ceiling. Thus a stagnant zone is created within the occupied zone.

CEILING OUTLET

The cooling diagram for the ceiling outlet (Figure 18) shows that jet momentum to the left is counteracted by the stronger bouyant forces of convection currents rising along the outside wall. Thus the jet drops before reaching the wall. The jet reaches the neutral temperature interior wall to the right and drops down along it. No stagnant zones are noticeable.

During heating the ceiling diffuser shows the effect of bouyant forces caused by natural convection currents. The downward cold air draft on the outside wall to the left creates a slight negative pressure at the ceiling. The warm air jet moves in from the right to fill the void and the throw extends to the wall. However, the warm air looses its downward momentum toward its terminal point and does not extend down the outside wall; but being warm, tends to curl back toward the ceiling.

All outlets similar to Group "A" discharge air near the ceiling to take advantage of ceiling effect. During cooling, the warm air in the room is induced upwards to mix immediately with the cool primary air far above the occupied zone. Thus these outlets are capable of handling relatively large quantities of supply air at large temperature differentials.

During heating the warm air from the outlet tends to remain along the ceiling. This produces a large stagnant zone at some distance above the floor. Temperature variations between the stagnant layer and the total air envelope will be small due to good mixing. However, there is a large temperature difference within the stagnant layer. This is caused primarily as a result of cold natural convection currents off the outside wall. This condition indicates that some means of projecting warm air to the floor is required, or that additional heat should be supplied at the base of the perimeter exposure - especially under windows.

In an interior zone where heat loads are not so severe, the stagnant layer is practically non existent during heating or cooling and conditions throughout the room are uniform with a minimum temperature gradiant.

In summary, then standard outlets similar to group "A" type tend to be suited for cooling only applications, interior spaces, or in regions where perimeter heating in the winter is only a minor problem.

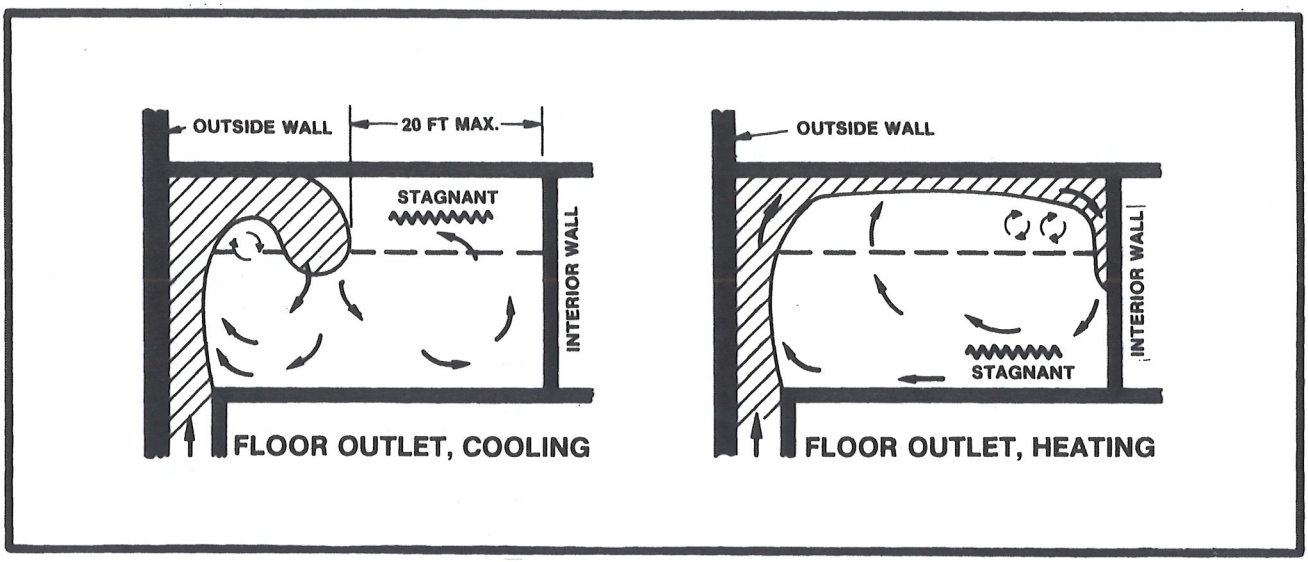

Figure 19

GROUP "B" OUTLETS

Figure 19 illustrates a floor outlet adjacent to an interior wall. Similar flow characteristics would be produced by floor grilles, baseboard units, low sidewall units, or linear slot type grilles in the floor or windowsill.

Since these outlet types have no deflecting vanes to spread the air, the primary air is projected vertically in a single jet up the inside wall. When the air strikes the ceiling it fans out in all directions from the point of contact.

During cooling the total air envelope follows the ceiling for some distance, and drops into the occupied zone as it looses momentum. A stagnant zone is created outside and above the terminal point of the total air envelope by warm convection currents rising along the outside wall. This usually occurs above the occupied zone. The space below the total air envelope will be adequately cooled due to the induction of warm room air into the vertical jet of cool air. Space to the right of the total air envelope and below the stagnant zone will also be adequately cooled as the cooler air drops into the occupied zone creating a counter clockwise air movement to the right. The farther the inside wall is away from the total air envelope the more temperature stratification occurs in the occupied zone. Manufacturers test data suggest the inside wall not be more than 20 feet beyond the terminal point of the total air.

During heating the projection pattern is similar to cooling. The less dense warm air in the jet hugs the ceiling.

The throw extends out to and part way down the opposite wall. Cold convection currents flow down the outside wall creating a stagnant zone along the floor. Comparison with Group "A" Type outlets will show the stagnant zone during heating to be smaller. This is due to the induction of cold air along the floor directly into the vertical jet. This reduces the tendency toward stratification and results in greater temperature equalization in the occupied zone.

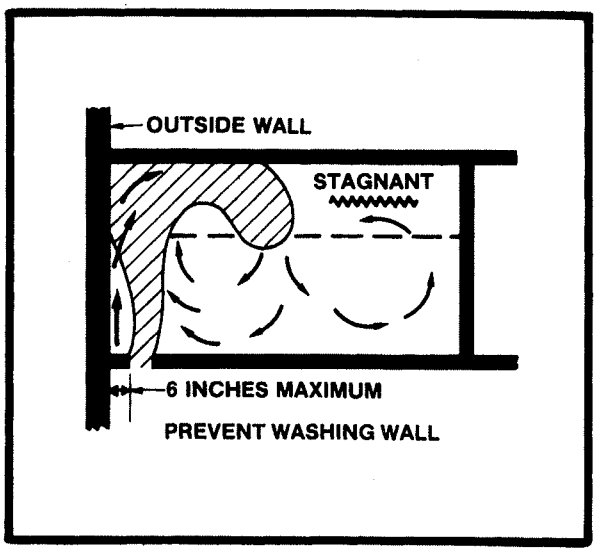

Figure 20

When placed on an outside wall the primary air will be drawn toward the wall. This scrubbing of the wall increases heat gain or loss. To minimize this effect (Figure 20) the outlet should be placed no more than 6 inches away from the wall and deflected at a 15 degree angle away from the wall. Installed in this manner the primary air attaches itself further up the wall - minimizing scrubbing.

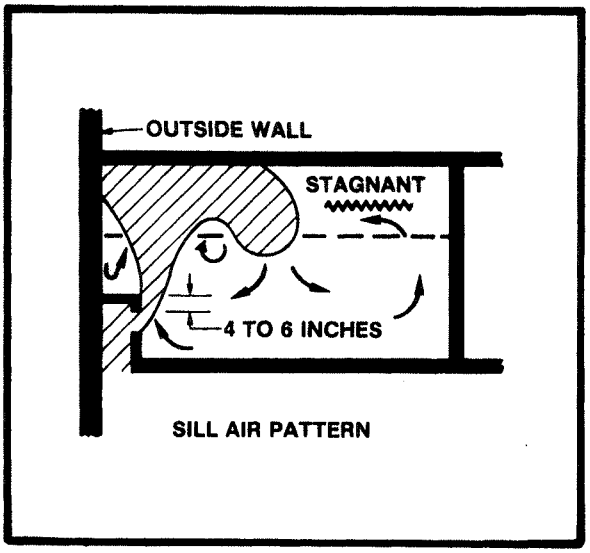

Figure 21

Locating the outlet in a low sidewall or sill produces the effect shown in Figure 21. To cause the primary air to be drawn back to the wall instead of being projected into the room, the jet must come in contact with a vertical surface of approximately 4 to 6 inches at the point of discharge.

When located along the outside wall these outlets will not completely counteract natural convection currents unless sufficient outlets are installed around the perimeter - preferably in areas of the largest heat gain or loss (i.e., under windows). When installed in this manner, Figure 19 provides an adequate picture of heating performance.

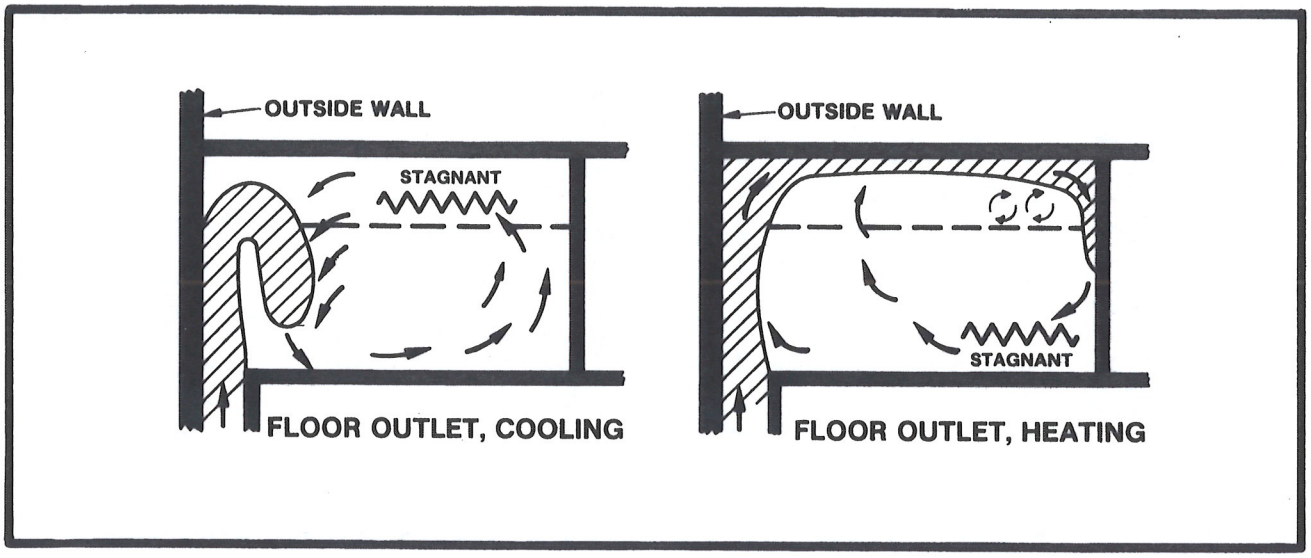

Figure 22

In summary then Group "B" outlets perform better than Group "A" outlets during heating - particularly when located along the outside wall. Group "A" outlets, however outperform group "B" outlets during cooling.

GROUP "C" OUTLETS

Figure 22 illustrates a floor outlet installed next to an outside wall. Performance shown would be similar for any floor mounted grille, diffuser, or linear slot; or any low sidewall diffuser. Although related to group "B" outlets, Group "C" outlets are characterized by wide spreading jets, higher supply velocities, and higher induction ratios.

During cooling the wide diffusion of the primary air along the wall lowers the jet velocity rapidly causing the cold total air to fold back toward the floor. This increases the size horizontally and vertically of the stagnant zone compared to Group "B" outlets. Minimizing this effect is best achieved by using low outlet Δt's of less than 15F.

The primary benefit of Group "C" outlets occurs during heating. Here the wider diffusion and higher discharge velocities increase the induction of cold room air from the floor. This reduces the stagnant zone compared to Group "B" outlets.

Group "C" outlets have been used successfully for residential heating, however, they may also offer commercial solutions when heating requirements are severe, and cooling requirements moderate.

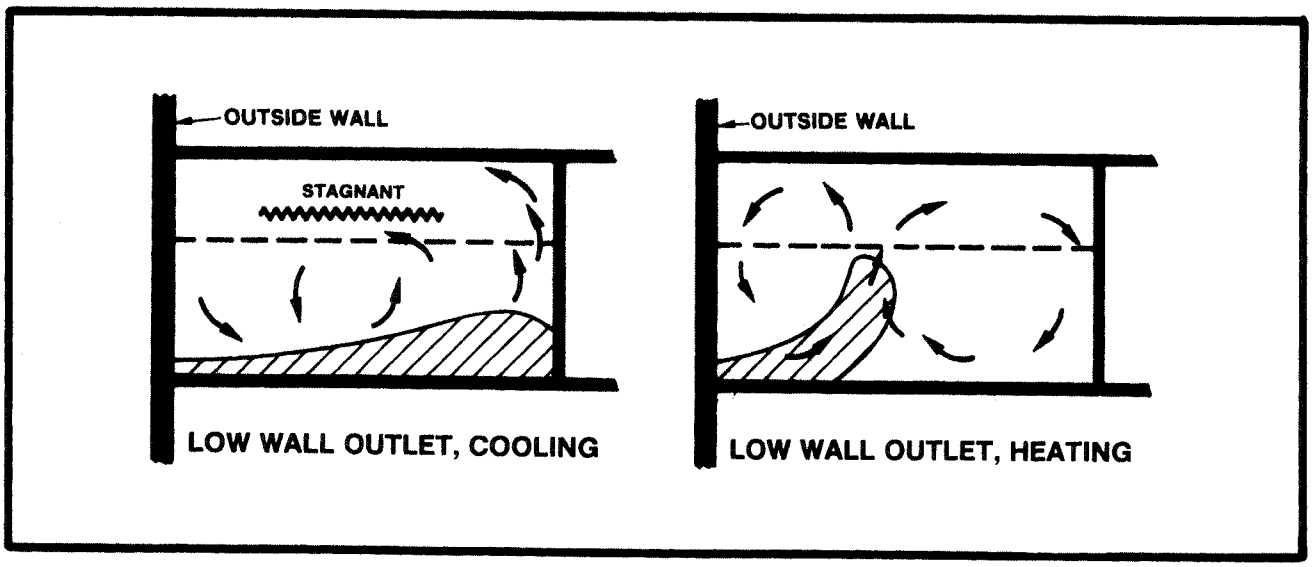

Figure 23

GROUP "D" OUTLETS

This group includes baseboard, low sidewall grilles and similar outlets. These outlets (Figure 23) discharge the primary air in single or multiple jets horizontally across the floor into the occupied zone. During cooling the total air envelope remains near the floor. Natural convection currents rise along the outer wall creating a large stagnant zone in the upper region of the room. During heating the total air envelope rises toward the ceiling inducing room air from the floor on either side and eliminating stagnant zones. Temperatures within the room are thus uniform except within the total air envelope.

Due to the high velocity jet directed into the occupied zone, this group outlet arrangement is not recommended for cooling. If used for heating, outlet velocities should be limited to 300 FPM. These outlets have been successfully applied in residential heating or industrial process installations where controlled air velocities are desired. They have questionable residential cooling or commercial comfort application value.

GROUP "E" OUTLETS

Figure 24 shows the heating and cooling diagrams for outlets mounted to provide downward vertical air projection. This group of outlets includes ceiling diffusers, nozzles, linear type grilles, grilles and other similar outlets.

The heating and cooling diagrams for these outlets show completely different throws for the same CFM of delivery air. During cooling the density

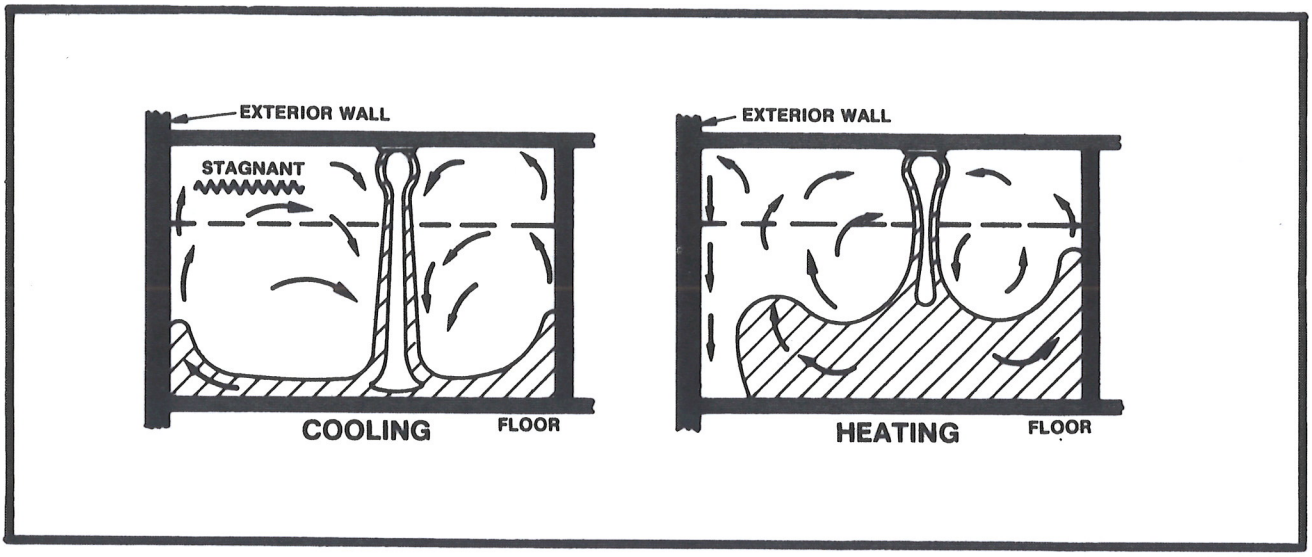

Figure 24

of the cool air lengthens the throw of the primary air to the floor, and the total air envelope tends to follow the floor. This pattern tends to create a stagnant zone near the ceiling, where warm convection currents off the exterior wall on the left have accumulated a pool of warm air. High velocities and large temperature gradients exist where the total air envelope penetrates the occupied zone.

During heating the bouyant forces are acting against the jet of primary warm air. Sufficiently high outlet velocities are needed to project the total air to and across the floor. After reaching the floor bouyancy forces will fold the total air back toward the ceiling. Cold downdrafts along the left exterior wall remain uneffected, however, they are mixed into the total air envelope along the floor. Just as during cooling, the warm air envelope being projected into the occupied zone creates localized high velocities and temperature gradiants.

The large variance in throw characteristics generally result in the outlets being used for cooling or heating - seldom for both. One way of reducing the throw variance is to minimize bouyancy effects. This is accomplished by selecting small outlet temperature differentials (25F or less).

To avoid the high velocity region in the occupied zone, outlets are generally placed along the outside wall which makes it more difficult to create proper air motion in the rest of the space.

In summary, use of outlets in this group is recommended for localized spot cooling or heating and not for applications requiring both cooling and heating from the same outlet.

HEATING AND COOLING FROM THE SAME OUTLET

A review of groups "A" through "E" diffuser types reveals that optimum cooling performance is achieved with the use of group "A" high sidewall or ceiling outlets, while group "C" outlets provide the best heating performance. Group "B" outlets represent a reasonable compromise for outlets that must both heat and cool. Group "B" compromises the optimum under the window heating performance of group "C" in order to provide reasonable cooling performance. There is another group of recently developed outlets that compromises the optimum cooling performance of group "A" in order to provide reasonable heating performance.

GROUP "F" OUTLETS

This group of outlets includes ceiling diffusers and linear ceiling diffusers that are able to redirect the supply air toward the outside wall when heating performance is required.

A review of group "E" (Figure 24) shows that when outlets are selected for heating the throw must overcome bouyancy forces to reach the floor. High velocity air is required. The group "E" outlet when delivering the same CFM for cooling now runs into difficulty. The bouyant forces now aid the momentum of the jet and the cooling throw becomes excessive - thrusting high velocity cool air along the floor into the occupied zone.

Group "F" outlets supply primary air in two directions during cooling and are located near the quarter point (1/4 L) of the room (Figure 25). The throw extends down the outside wall to the floor - Washing the wall with primary air. Normal induction and convective currents will prevent the formation of stagnant regions.

During heating, the unit closes off flow to the interior of the room and directs the total flow of primary air toward the outside wall. Thus the discharge velocity is increased allowing the momentum of the jet to overcome its bouyancy tendencies and reach the floor. Along the way it mixes with and neutralizes the cold downdraft off the outside wall and windows. As the jet velocity slows it extends across the floor and then upward into the space as bouyancy forces dominate. Lower regions toward

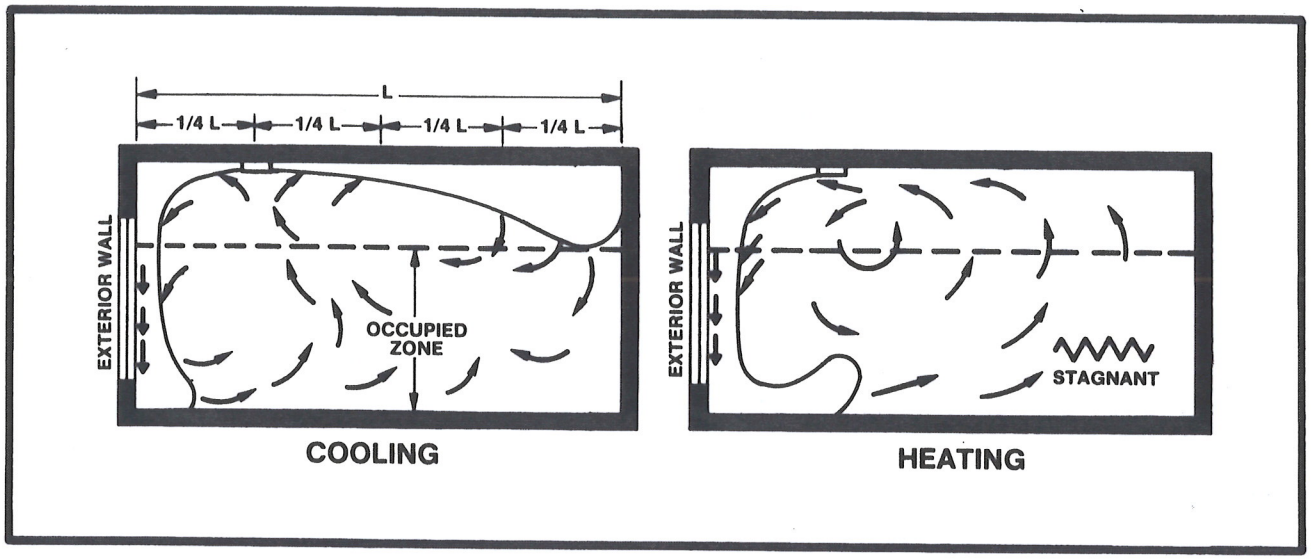

Figure 25

the room interior will tend to stagnate without the inducement of air motion.

Group "F" outlets thus compromise the optimum cooling performance of high sidewall or ceiling outlets in order to achieve reasonable heating performance from the same diffuser.

Outlets of this type tend to be utilized where climates are moderate. Where building heating loads are equal to or less than 400 BTU/hr/lineal foot of perimeter wall, these outlets perform satisfactorily. When building heating loads are greater than 400 BTU/hr/lin ft., some form of low perimeter heating system is required to overcome cold convection currents off the exterior wall.

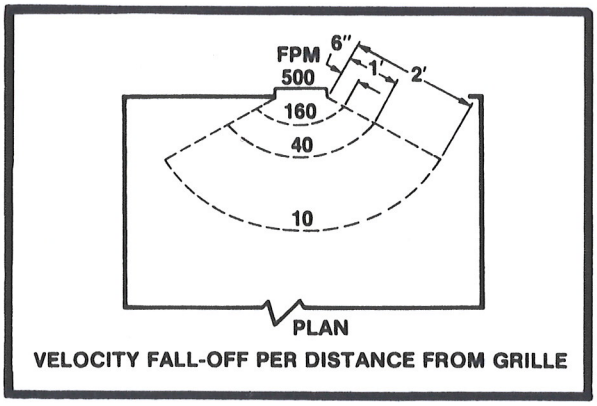

Figure 26

RETURNS

With air being projected into a confined space, a similar amount has to be removed or the circulation would come to a halt due to pressure build up in the space. Return openings must be located in the space to maintain proper circulation.

As the insert in Figure 26 shows, the approach air velocity to a return

intake drops rapidly just a few inches in front of the opening. For this reason returns affect the room air motion only in its immediate vicinity. Recognizing this, some advantage can be obtained by locating the returns in the most likely stagnant zones of a room. These regions by definition are always located outside the total air envelope of the jet. Although returns do not eliminate stagnant zones, returns do shrink their size and shift their locations slightly. For heating, returns should be located low for the pickup of cold dense air dropping to the floor. During cooling the density difference between supply and room air aids in natural diffusion within all areas of the occupied zone, and stagnant zones are practically eliminated. Thus, location for cooling is not critical, however, expected low velocity regions of the space would be prime areas for the returns.

ARCHITECTURAL CONSIDERATIONS

In many applications a large centrally located return grille can be used. This tends to minimize return ductwork and draws air in all directions from the surrounding spaces. In other applications a hall, corridor or public space can be used as a return with the use of a large grille at the end of the passageway.

Another common method of return in commercial buildings is through the cavity above the ceiling. This is referred to as a ceiling plenum return. Returns of various types are located in the ceiling for this application, and the central equipment draws air from the cavity.

Short Circuiting

The use of ceiling returns outside the occupied zone can place the returns within the total air envelope of the supply air. Concern over short circuiting arises. When supply air is drawn into a return before it has been circulated in the occupied zone, and has not reached room temperature, it is considered to have been short circuited. Based on a 20F outlet Δt, every 1F difference between room and supply air temperature corresponds to approximately a 5% circulation loss. The percentage of supply capacity short circuited is dependent upon the prediction of temperatures in the jet. These temperatures are dependent upon (1) The location of the return with respect to the supply outlet, (2) Supply outlet initial velocity, and (3) The terminal velocity of the supply air at the return opening.

Returns within the total air envelope should be located perpendicular to the

flow of the jet and on a centerline which does not coincide with the jet centerline. This will assure the lowest velocity (subsequently warmest) supply air is recirculated. Short circuiting loss will thus be minimized. Returns should be located at least as far away from the outlets as the minimum throw. This usually corresponds to a centerline jet terminal velocity of 150 FPM. At this distance short circuiting generally should be less than 15%, and even lower if the return is not on the jet centerline. Locations at the maximum throw or along the extremities of the total air envelope where air velocity equals 50 FPM will be less than 5%.

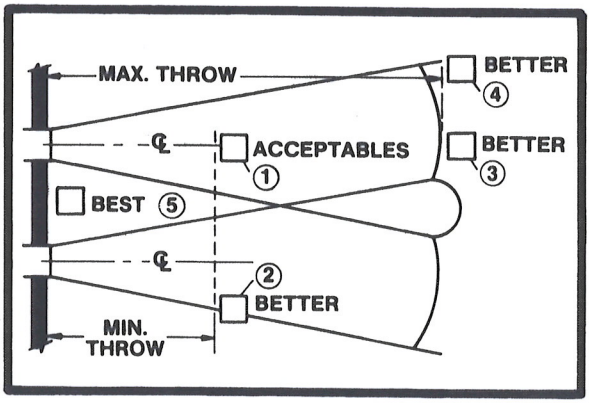

Figure 27

Figure 27 shows a plan view of two outlets discharging into a space. Several returns are shown at different ceiling locations. Location No. 1 is acceptable with losses around 15%. Locations 2, 3 and 4 would be better since the jet velocities and temperatures would tend to be within 1F of room temperature and losses would thus be around 5%. The best location (No. 5) would be outside the total air envelope and losses would be zero.

Return Grille Selection

Return grilles are selected by choosing appropriate grille gross face areas which yield acceptable room noise levels, and reasonable grille static pressure losses. Manufacturers offer different rating methods, however, general selection guidelines can be tied to grille face velocities.

The acceptable face velocity varies with the return location and type of application. Figure 28 shows typical velocity recommendations based on grille gross areas (L X W). This is sufficient for approximating sizes. Final sizes should be selected from manufacturers data.

GENERAL OUTLET SELECTION PROCEDURE

The following procedure is generally followed in selecting the outlet type, the location, and outlet quantity for a given application:

1. Determine Required CFM Supply Air

   Using load estimating techniques determine the CFM of air required to absorb the room load. Consideration must be given here to the

GRILLE LOCATION	FPM OVER GROSS AREA
COMMERCIAL	
Above Occupied Zone	800 and above
Within Occupied Zone, not near seats	600 - 800
Within Occupied Zone, near seats	400 - 600
Door or Wall Louvers	500 - 1000
Undercutting of Doors	600
INDUSTRIAL	800 and above
RESIDENTIAL	400

Figure 28

outlet Δt to be used. Typically the design room temperature for cooling will be 75F and the temperature of the air leaving the outlet will be 55F. Thus an outlet Δt of 75 - 55 = 20F is common. CFM is related to outlet Δt by the following equation:

$$CFM = RSH/(1.1 \times \Delta t)$$

Where

CFM - CFM of primary air
RSH = Room Sensible Heat (BTUH)
1.1 = Constant
Δt = Outlet Temperature Difference

Although 20F is a common outlet Δt, others may be used to match psychrometric requirements duct sizing, or outlet performance. Higher than a 20F Δt will reduce primary air requirements, and less than 20F Δt will increase primary air CFM.

2. Consider Room Constraints

Based on the space to be conditioned the following items should be determined:

1. Height of occupied zone
2. Potential use of a 1 Foot zone along the walls for projection of the total air envelope.
3. Architectural constraints such as windows, beams, columns, ceiling height and room dimensions.

3. Select Outlet Location

In locating the outlet consideration must be given to the projection pattern of the jet, the room constraints, and the outlet heating and cooling requirements. Selecting the optimum location will maximize comfort and minimize drafts and stagnant regions.

OUTLET TYPE	CFM/SQ. FT. FLOOR AREA	AIR CHANGES PER HOUR	OUTLET Δt RANGE
GRILLE/REGISTER	3 - 6	7	15 - 25
SLOT DIFFUSER	4 - 10	12	20 - 25
PERFORATED PANEL	5 - 15	18	20 - 25
CEILING DIFFUSER	5 - 25	30	20 - 35

Figure 29

4. Select Outlet Type

Actually Step 3 and this step are interrelated and it is difficult to separate one from the other. However, when a choice between outlets does exist figure 29 can serve as a general guide. Keep in mind that actual manufacturer's performance should be the final basis for choice.

Generally it can be said that each type of diffuser has characteristics which make it desirable for certain applications. Grilles have the lowest induction rates and longest throws. The low induction rates result in the total air traveling a longer distance before it approaches room temperature. Grilles thus can be said to have a slow temperature diffusion. Round and square ceiling diffusers have the highest induction rates, shortest throws (radius of diffusion), and most rapid temperature diffusion. Slot diffusers fall in between these two.

5. Select Outlet Size and Quantity

Manufacturer's ratings must be matched to allowable throw, drop, spread, room air motion, and room sound requirements to arrive at outlet quantity and size.

SELECTION OF HIGH SIDEWALL DOUBLE DEFLECTION GRILLES

The preferred location for sidewall outlets is high on the wall at a point where there is some opportunity for decrease of terminal velocity before the total air envelope enters the occupied zone. Performance of the outlet depends on whether the jet is discharging into a "Free Space" or a "confined space." Adjustable vanes

provide an opportunity for changing the characteristics of the air stream to match the application. The influence of vanes on outlet performance is therefore of considerable importance.

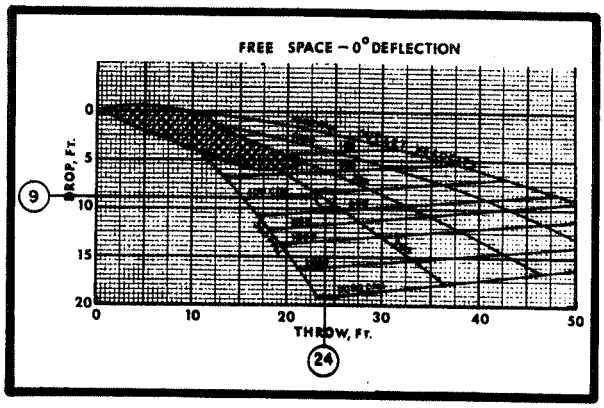

Figure 30

FREE SPACE

Many manufacturers rate their outlets on the basis of "Free Space" performance, with horizontal vanes set straight so that no vertical deflection is given to the air. The free space characteristics are those that would exist if the ceiling were a long distance above the top of the outlet. This type of application might exist in auditoriums, churches, or gymnasiums or other spaces with high ceilings. Figure 30 is a graphical representation of a typical outlet's performance on the free space basis at 20F temperature difference. Throw, plotted on the horizontal scale, is based on a terminal velocity of 50 fpm. The distance the air stream drops below the centerline of the outlet may be read along the vertical scale. Lines of constant outlet velocity and primary CFM are plotted on the grid to complete the chart.

As an example of the use of this chart, assume that an outlet is sized to supply 500 CFM to a space at an outlet velocity of 500 FPM. The throw may be read as about 24 Feet and the drop about 9 feet. The centerline of the outlet would have to be 6 Ft. + 9 Ft = 15 Feet above the floor if a 6 Foot occupied zone is desired. This is necessary to prevent the air stream's penetration into the occupied zone before reaching the terminal velocity of 50 FPM.

CONFINED SPACE (CEILING EFFECT)

Outlets may also be installed in "confined spaces - i.e., rooms with close proximity walls, ceilings, and floors. Locating the top of the outlet within 1 foot of the ceiling results in the jet hugging the ceiling, increasing throw, and reducing drop. Figure 31 shows the impact of ceiling effect. The same outlet as in the previous example now gives different results. For 500 CFM at a velocity of 500 FPM the throw may be read as about 26.5 Feet and the drop about 8 Feet. With this drop the outlet

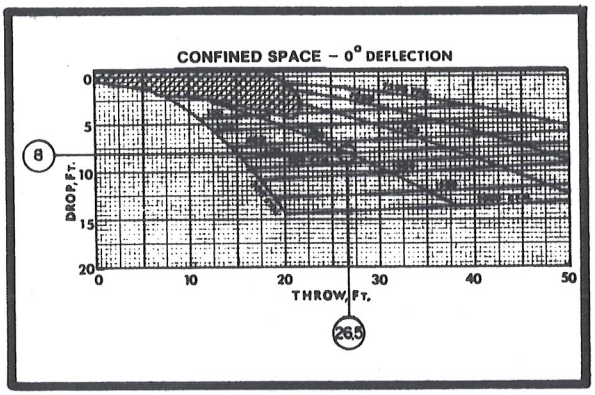

Figure 31

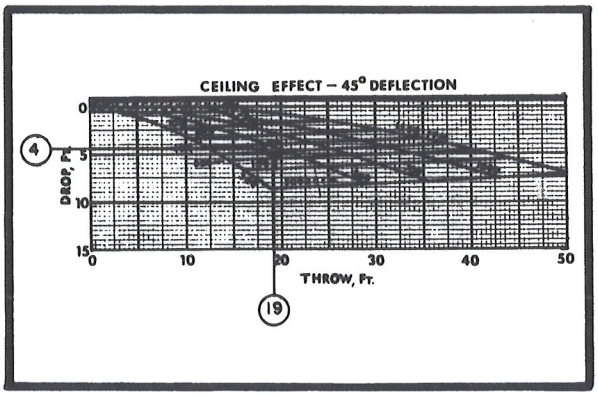

Figure 32

centerline need be only 6 Ft. + 8 Ft. = 14 Feet above the floor level to prevent high velocities in the occupied zone.

Figure 31 also shows that drop is primarily a function of the CFM delivered by the outlet and not the outlet velocity. At 400 CFM increasing the velocity from 300 FPM to 1000 FPM only reduces the drop from 7.2 Ft. to about 6 Ft. However, at 500 FPM reducing the CFM from 1000 to 200 reduces the drop from 10 Ft. to about 5.5 Ft. Thus when drop is a consideration it is better to use multiple outlets with smaller air quantities as opposed to one large outlet.

IMPACT OF SPREAD

The pattern described by Figure 31 is altered significantly when vertical deflection vanes are set at angles to give fanning or flaring effect. Both throw and drop are reduced in this case. A well designed grille will be capable of deflecting the discharge air approximately 50 degrees to either side.

Figure 32 shows the impact of 45 degrees vane deflection settings. The same outlet as in the previous examples when delivering 500 CFM at 500 FPM outlet velocity gives a throw of about 19 Feet and a drop of only 4 Feet. The outlet centerline would have to be only 6 Feet + 4 Feet = 10 Feet above the floor.

MINIMUM CEILING HEIGHT

The ceiling height required by a high sidewall outlet equals the sum of (1) the height of the occupied zone, (2) the drop from the centerline of the outlet, (3) one half the outlet height, and (4) the distance from the top of the outlet to the ceiling.

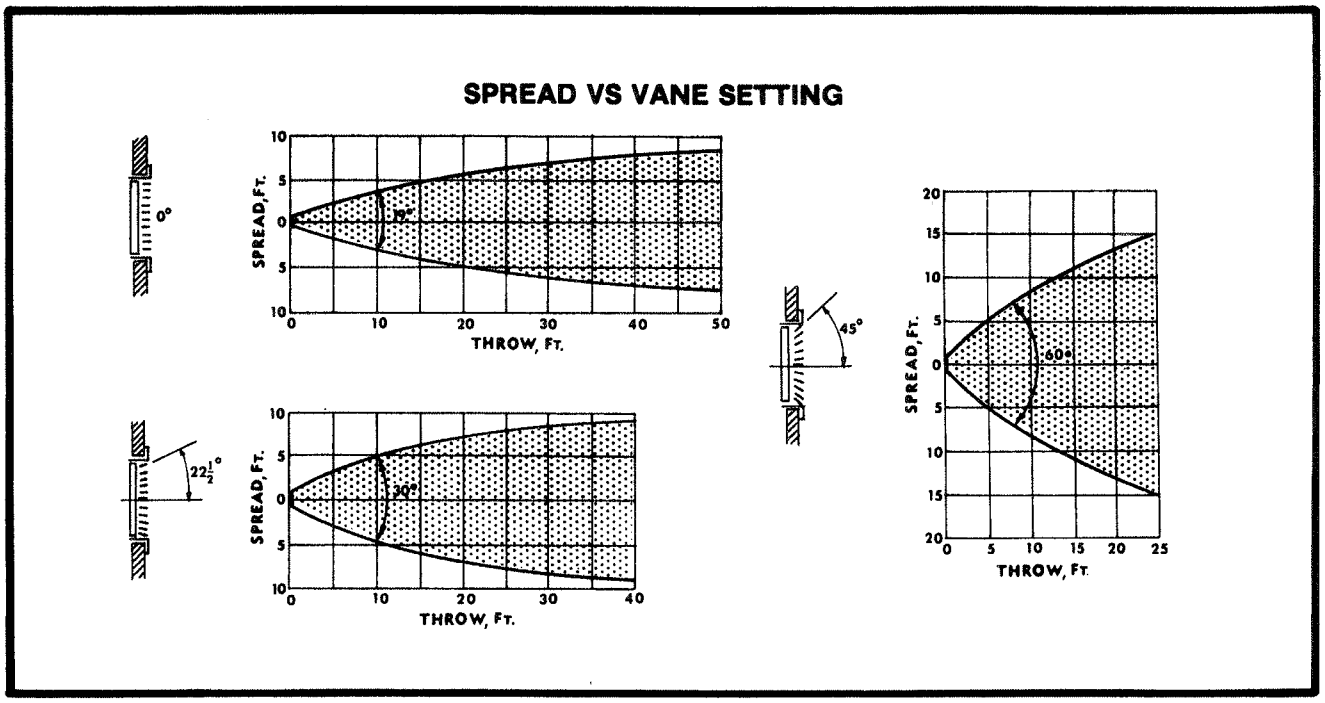

Figure 33

The previous example required the centerline of the outlet to be 6 Ft. + 4 Ft = 10 ft. high. With an 8 inch high diffuser located 1 foot below the ceiling. The required ceiling height should be 10 Ft. + 1/2 (8 In.) + 1 Ft. = 11Ft. 4 Inches.

Ceiling effect will occur as long as the top of the outlet is within 1 Foot of the ceiling. When located more than 1 Foot below the ceiling, horizontal vanes should be used to deflect the air up toward the ceiling. As a rule of thumb the top of the outlet should be no more than twice the outlet height below the ceiling.

MIXING OF JETS

Figure 33 represents one manufacturer's ratings for the spread of the jet stream as a function of throw and vertical vane angle settings. It is common for spaces to be served by multiple outlets spaced along a common wall. In this case the spread of each jet may interfere with the spread of jets on either side. Mixing of jets thus will occur. When mixing occurs at a distance from the outlet less than 50% of the normal throw, the mixed stream will expand vertically resulting in increased drop and a significant increase in throw. If mixing occurs beyond the 50% distance, the throw will increase by about 15% with no appreciable increase in drop.

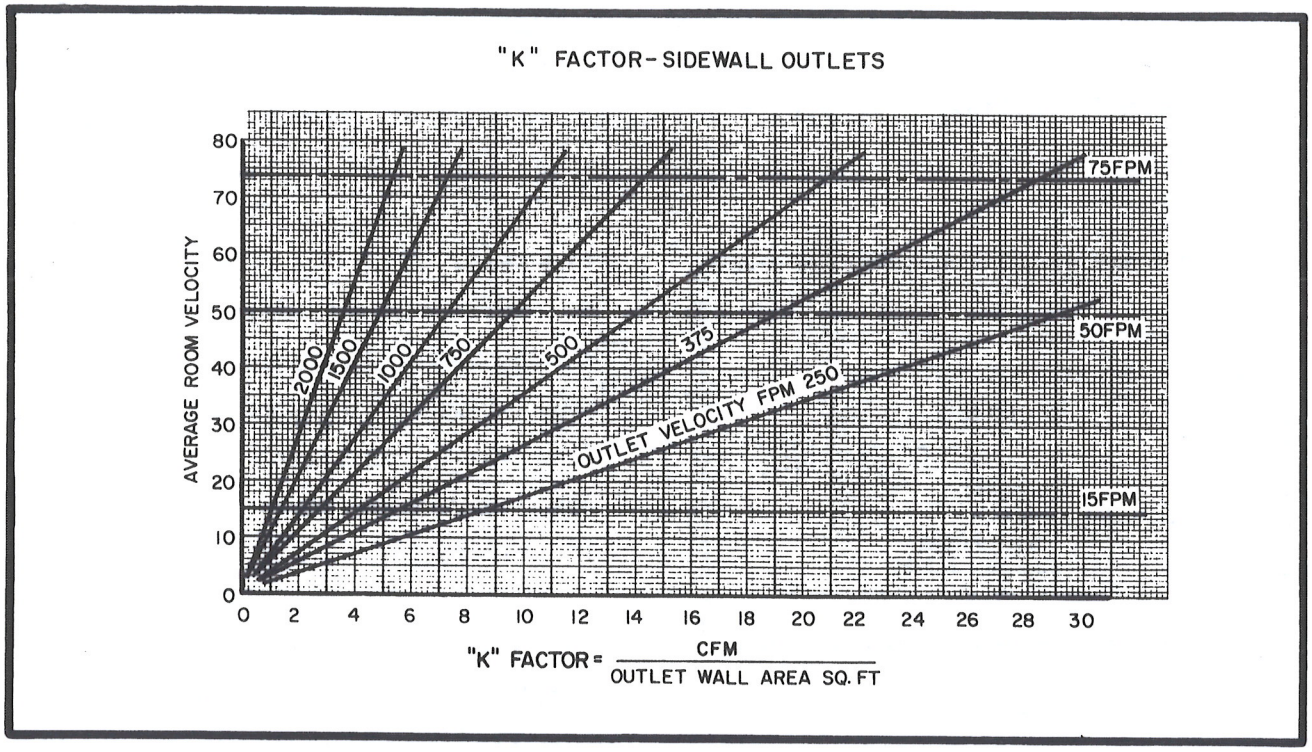

Figure 34

ROOM AIR MOTION

Research into the performance of sidewall outlets in the 1930's led to a generalized technique for determining the general air motion within a room. The approach depends on a factor "K" which is the supply cfm divided by the area of the wall containing the outlet(s). This factor has the dimensions of velocity, and is related to the general air motion through the induction ratio. Test results have been correlated using the "k" factor as a basis, and are presented in Figure 34.

The "k" factor chart defines the interrelation of outlet cfm, outlet velocity, and average room velocity (or residual velocity) for spaces supplied with air through sidewall outlets. This chart, in conjunction with outlet rating tables published in the appendix of this book has been used successfully for many years with uniformly good results. These ratings are representative of the type of information presented by the manufacturers of high sidewall outlets.

An inspection of these sidewall outlet ratings indicates that each size outlet is rated at various outlet velocities for various CFM's; throws at 0, 22-1/2 and 45° vane settings; and minimum ceiling height vs outlet temperature difference. Use of these

ratings will be demonstrated in the selection procedure below. For spaces with beamed ceilings ratings of a reputable manufacturer should be consulted.

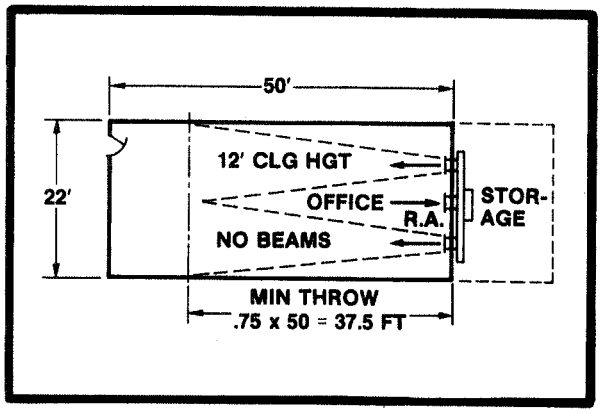

Figure 35

SELECTION PROCEDURE - SAMPLE PROBLEM

Assume a real estate office as shown on Figure 35. The conditioned space is 50 ft. by 22 ft. or 1100 sq. ft. The ceiling height is 12 Ft. 0" inches with no obstructions. The load estimate indicates that 1700 cfm with a 20F outlet Δt is required.

OUTLET LOCATION

One way of approaching this job is to locate the air handler in the storage space, distributing the air from two outlets blowing the length of the space. This would result in a simple, relatively inexpensive job.

ALLOWABLE THROW

To adequately cover the area, the throw should be at least 75% of the available distance. This requires, in this case, 37.5 Ft. The basic reason for selecting a minimum throw at 75% of available distance is to provide some latitude in selecting outlets and also make provision for increased throw which may result from merging air streams.

The maximum allowable throw would normally be the length of the room plus the distance from the ceiling down to the top of the occupied zone. With a 12 Ft. ceiling and a 6 Ft. occupied zone the maximum allowable throw would be 50 + (12-6) = 56 Feet. If a 1 Foot zone along the opposite wall could be used for downward projection of the jet, then the maximum throw would be 50 + 12 = 62 Feet.

CHECKING JET SPREAD

To avoid stagnant zones the jet must spread out to cover the opposite wall. With two outlets blowing into a 22 Foot wide room the two jets will adequately cover the opposite wall and begin to merge whenever the spread of each jet exceeds 11 Ft.. Using a spread of 11 Ft. Figure 36 shows that

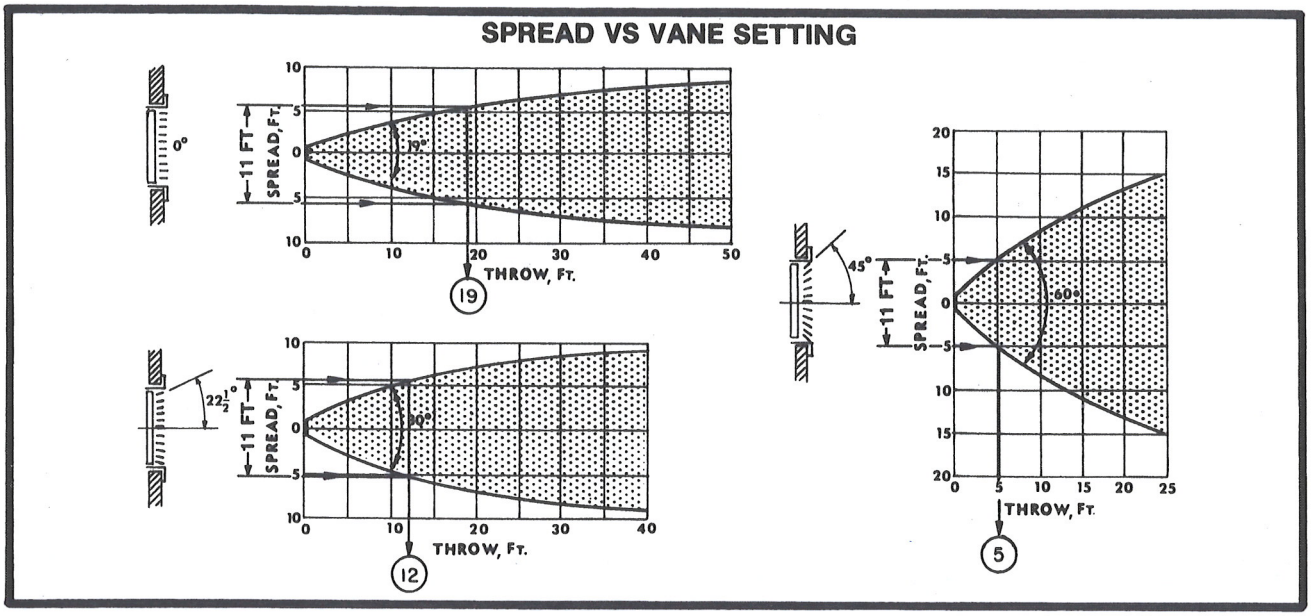

Figure 36

merging of jet streams will occur at 19, Ft., 12 Ft., and 5 Ft. for 0, 22 1/2, and 45 degree vane settings respectively. When merging occurs before the throw reaches 1/2 the room or 1/2 the maximum outlet throw (whichever is smaller) increased drop into the occupied zone and increased throw will occur. With a 50 Ft. room, all three vane settings would merge before reaching 1/2 the room. Therefore, a selection is desired whose throw is less than the room length of 50 Ft.

MAXIMUM DROP

The outlet ratings in the appendix are based on an occupied zone height of 6 Ft. with the outlet mounted a distance below the ceiling of twice the height of the outlet. Drop is automatically taken into account therefore, when the ratings show the minimum allowable ceiling height. For this problem the minimum ceiling height must be less than 12 ft.

MAXIMUM OUTLET VELOCITY

Using the "K" factor chart will reveal the appropriate outlet velocity that will provide suitable room air motion. The outlet wall area is 22 Ft. x 12 Ft. = 264 Sq. Ft. The "K" factor equals 1700 CFM/264 Sq. Ft. = 6.45 CFM/ Sq. Ft. Entering Figure 37 with a "K" factor of 6.45 reveals that the average room air motion will be 22 FPM (Good) for an outlet velocity of 500 FPM; 32 FPM (Good) for 750 FPM; 42 FPM (slightly high) for 1000 FPM; and 62 FPM (high, 50 FPM max) for 1500 FPM.

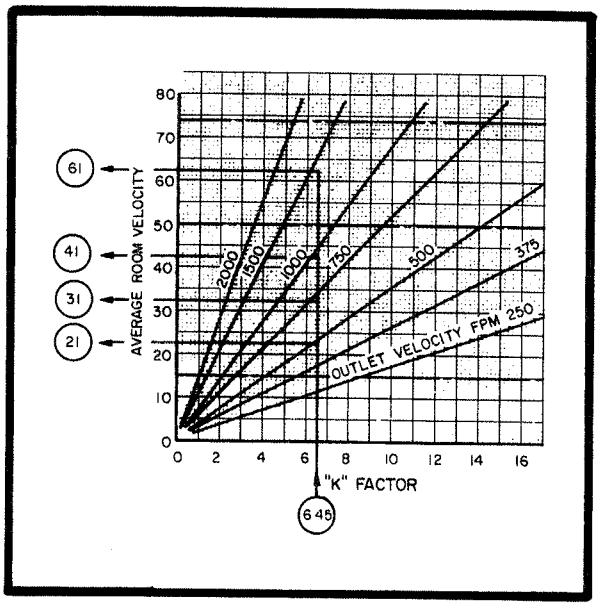

Figure 37

Other than room air motion another limitation placed on outlet velocities is acceptable room sound levels. The table in Figure 38 shows that for general offices the maximum outlet velocity should be around 1000 to 1250 FPM.

RECOMMENDED OUTLET VELOCITIES

APPLICATION	TERMINAL VELOCITY (FPM)
Broadcast studios	300-500
Residences	500-750
Apartments	500-750
Churches	500-750
Hotel bedrooms	500-750
Legitimate theaters	500-750
Private offices, acoustically treated	500-750
Private offices, not treated	500-800
Motion picture theaters	1000
General offices	1000-1250 ←
Department stores, upper floors	1500
Department stores, main floor	2000

Figure 38

Thus 750 FPM would seem to be the most desirable from both an air motion and sound point of view. However 1000 FPM could be tolerated.

SELECT OUTLET

A summary of the above points shows that an outlet handling 850 CFM should have (1) a throw between 37.5 Ft. and 50 Ft. to minimize the impact of merging air streams, (2) A minimum ceiling height less than 12 Ft., and (3) an outlet velocity around 750 to 1000 FPM.

Inspection of outlet ratings in the appendix for flat ceiling reveals the results shown in Figure 39. A 30 x 6 outlet comes closest to meeting all the requirements. The 0 degree vane setting is not acceptable having a throw which exceeds the length of the room (53 Ft) and requiring a ceiling higher than 12 Ft.

As pointed out earlier the combined spread of two outlets set at 22 1/2° vanes will be 24 Ft. which exceeds the available room width of 22 Ft. The air streams will merge and increase throw 10 to 15%. Assuming 15% as the worst condition, adjusted throw = 40 x 1.15 = 46 Ft. This is less than the 50 Ft. length available and is acceptable.

At 1047 fpm, when the outlet would deliver the required 850 cfm, the required ceiling height would be slightly higher than the 12 Ft. available.

OUTLET VELOCITY		[illegible]				[illegible]				2000 FPM				
STATIC PRESSURE STANDARD OUTLET		Str B = .093, 22½° = .11 45° = .14				Str B = .211, 22½° = .24 45° = .32				Str B = .375, 22½° = .42 45° = .565				
STATIC PRESSURE WITH METERING PLATE		Str B = .33, 22½° = .33 45° = .475				Str B = .715, 22½° = .74 45° = 1.15				Str B = 1.36				
Nom. Size of Outlet (and Free Area)	Vane Setting	Air Quantity (cfm)	Blow (ft)	Temp Diff (F) 15 [illegible] 25 Min Clg Ht			Air Quantity (cfm)	Blow (ft)	Temp Diff (F) 15 [illegible] 25 Min Clg Ht			Air Quantity (cfm)	Blow (ft)	Temp Diff (F) 15 20 25 Min Clg Ht		
[illegible]	22½°	812	50	13.0	[illegible]	15.5	[illegible]	[illegible]	15.5	17.0	18.0	1624	115	17.5	19.0	20.5
			38	11.0	[illegible]	12.5	1218	[illegible]	12.5	13.0	15.0		86	13.5	15.0	16.0
	45°		25	9.0	9.5	10.0		41	9.5	10.0	11.0		58	10.0	11.0	12.0

BY INTERPOLATION

		STRAIGHT VANES		22½ VANES	
CFM	O.V.	THROW	MIN CLG HT	THROW	MIN CLG HT
812	1000	50	14.5	38	12.0
[illegible]	[illegible]	[illegible]	[illegible]	[illegible]	[illegible]
1218	1500	82	17.0	62	13.0

Figure 39

In summary, a 30 x 6 outlet with a 22-1/2 vane setting will deliver 850 cfm with an adjusted throw of 46 Ft. and a minimum ceiling height of 12.0 Ft. The outlet velocity of 1047 is acceptable from a noise generation standpoint for a typical general office application, however the resultant room air motion will be on the high side (>40 FPM). The two air streams will also merge at a point less than 1/2 (40) = 20 Ft. and create an intrusion into the upper level of the occupied zone. Combined with the minimum ceiling height being slightly larger than the available 12 Ft., some drafts will be felt in the upper regions of the occupied zone.

This then represents a marginally acceptable outlet selection due to (1) the intrusion of the total air envelope into the upper region of the occupied zone and; (2) the room air motion will be about 42 to 43 fpm which approaches the 50 fpm maximum recommended for people in a sitting position.

Had this job required more than 1700 cfm, it would have been very difficult if not impossible to select two outlets blowing the 50 Ft. dimension of the space. The problem would most certainly require a minimum ceiling height higher than that available. The air streams would penetrate into the occupied zone before reaching a terminal velocity of 50 fpm. The result would be complaints of drafts. Nothing could be done to correct the problem short of another approach to the distribution system.

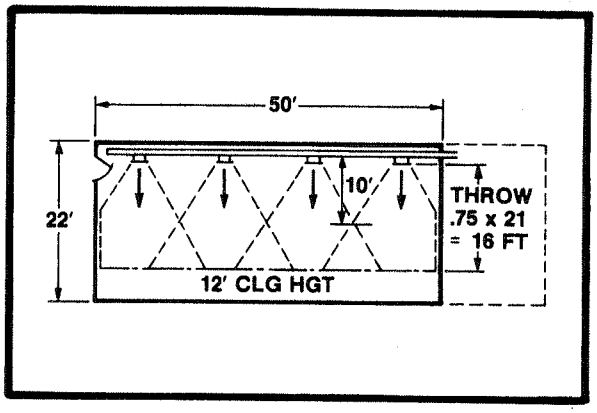

Figure 40

A second way of approaching this job is to distribute the air from outlets blowing across the room as shown in Figure 40.

In this case, the duct would run the length of the space and the cost of more outlets and a longer duct run would be higher.

The maximum throw would be equal to the length of the room plus the vertical distance down the opposite wall from the ceiling to the top of the occupied zone (21 + 6 = 27 Ft.)

The throw should be at least 75% of the available distance. Assuming the duct is a foot wide, the distance from the outlet face to opposite wall is 21 ft. and throw = .75 x 21 or 16.0 Ft.

With such a short throw, a 45 degree vane setting will likely be required in combination with an outlet velocity high enough to produce an acceptable room air motion. Refer to Figure 33, Spread vs. Vane Setting. At 16 Ft. throw and 45° vane setting the total outlet spread is 2 x 11 = 22 Ft. The The approximate spread pattern is shown on Figure 39. The air streams merge about 10 Ft. from the outlet face which is more than 50% of the throw. This is acceptable, indicating the use of four outlets or 1700/4 = 425 cfm/outlet.

Referring again to the "K" factor chart (Figure 34) outlet velocity may be determined as a guide to selecting outlets. The wall area is 50 Ft. x 12 Ft.= 600 Sq. Ft., and K = 1700/600 = 2.83. From the "K" factor chart at 2.83 outlet velocities of 500 FPM, 750 FPM, 1000 FPM, and 1500 FPM reveal room air motions of 10.5 FPM, 15 FPM, 20 FPM, and 30 FPM respectfully. Considering the same noise criteria as before, an outlet velocity up to about 1000 FPM should be acceptable.

As before the ratings in the appendix should be inspected for an outlet which (1) discharges 450 CFM; (2) has an outlet velocity up to 1000 FPM; (3) has a 20F outlet Δt; (4) a minimum throw of 16.0 Ft.; (5) a maximum throw of 27 Ft., (6) a minimum ceiling height not to exceed 12.0 Ft.

Figure 41 shows that a 16 x 8 outlet with a 45° vane setting meets all

OUTLET VELOCITY						
STATIC PRESSURE STANDARD OUTLET		Str B = .051, 22½° = .061 45° = .08				
STATIC PRESSURE WITH METERING PLATE		Str B = .175, 22½° = .19 45° = .27				
Nom. Size of Outlet (and Free Area)	Vane Setting	Air Quantity (cfm)	Blow (ft)	Temp Diff (F) 15 Min Clg Ht		25
12 x 8 (56.7)	Straight 22½° 45°	339	36 27 18	12.0 10.0 8.5	13.5 11.0 9.0	14.0 12.0 9.5
	Straight 22½°		40 30	13.5 11.0 9.0	14.5 12.0	15.5 12.5 10.0

Figure 41

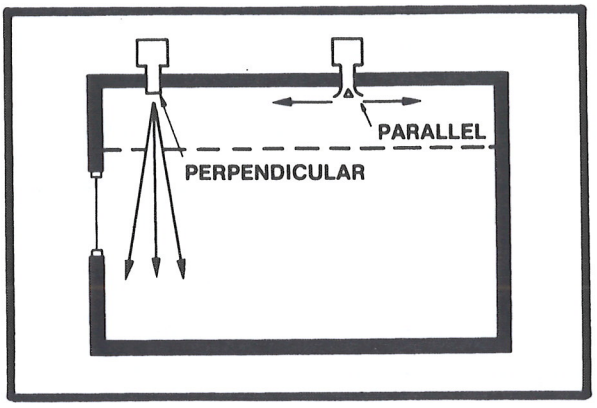

Figure 42

requirements. Thus four 16 x 8 outlets blowing the short distance of the room would perform better than two 30 x 6 outlets blowing the long dimension of the room.

SELECTION OF SLOT DIFFUSERS

An air outlet is a slot diffuser when the aspect ratio ratio - slot length divided by slot width - is large. One definition in common use requires the aspect ratio to be 25 or greater to qualify the outlet as a slot diffuser. Slot diffusers are of two types, perpendicular flow or parallel flow (See Figure 42). A perpendicular flow slot diffuser discharges air perpendicular to the surface on which the diffuser is mounted. A parallel flow slot diffuser is fitted with deflection devices which provide flow along the mounting surface. Slots are available in 1,2,3,4,5,6,8, and 10 Ft. lengths, and can be arranged in continuous lengths to match room dimensions.

PERPENDICULAR FLOW SLOT

The perpendicular flow slot diffuser is well suited to application in high side-wall or perimeter installation in sills or floors. Because it would inject high velocity air into the occupied zone, it is not normally used in ceilings. Slot diffusers should not be arranged in a continuous slot running the entire length of a side-wall for most applications. It has been found that active lengths of no more than 70% of the total wall length given the best performance. Manufacturers of slot diffusers offer dummy grille sections or "inactive lengths" that permit the clean linear appearance of the diffuser to be maintained through the inactive sections.

HIGH SIDEWALL LOCATION

As an example of the use of the high sidewall slot diffuser information, consider the same real estate office (Figure 43) discussed earlier. One approach might be to run a slot diffuser along the 22 foot wall of the space, fed from a distribution duct in the storage area.

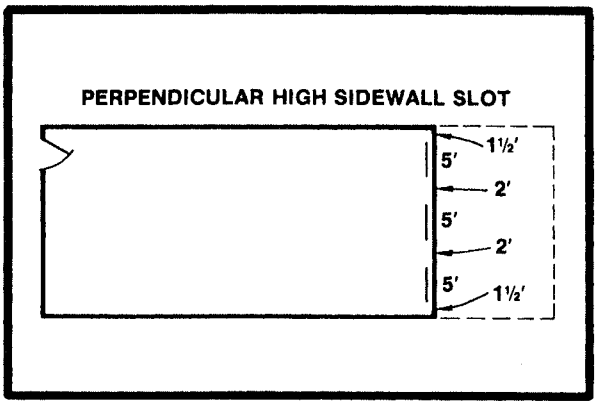

Figure 43

The active length of the slot may be taken as 70% of 22, 15.4 feet. As before, the CFM to be handled is 1700. The CFM per foot is then; 1700/15.4 = 110.

When used as a high sidewall outlet the throw should be approximately 75 - 100% of the space to be covered. In the absence of beams or other obstructions in the ceiling, the ceiling effect should normally be used to reduce the drop, unless the ceilings are very high. The required throw is therefore from 0.75 x 50 = 37.5 Ft. to about 50 Ft.

Inspection of the rating tables in appendix "B" shows that a 2" nominal width diffuser provides a throw of 39 ft. at 100 cfm/ft. and 47 Ft. at 125 cfm/ft. Interpolating to 110 cfm/ft.,

Cfm/Ft.	Throw	Velocity	Drop
100	39	960	4.2
110	(42.2)	(1046)	(4.4)
125	47	1200	4.8

The throw is 42.2 Ft., which is within the acceptable range. The outlet velocity may also be interpolated as 1046 fpm and the drop as 4.4 Ft. Added to the 6 Ft. height of the occupied zone, the slot could be located 6 + 4.4 + 10.4 Ft. above the floor. This appears to be an excellent design from an engineering point of view, although the architect may prefer to have the slot run along the 50 foot wall for appearance sake.

The design is based on an assumed 70% active length. Three 5 Ft. active lengths might be used to achieve an arrangement as in Figure 43. Other arrangements are possible. For instance, four - 4 Ft. sections with three - 1 Ft. and two - 1 1/2 Ft. inactive sections would function well.

PERIMETER SILL OR FLOOR

Slot diffusers are also used in sills or floors along the perimeter of a building. In these locations the stream of air directed upward during heating acts to counteract the downward flow of cold air due to natural convection. In perimeter spaces where both heating and cooling may be required, the method of distributing air must be a compromise. Distribution from perimeter slots is probably the best compromise available in terms of performance.

The air stream from a perimeter slot diffuser discharging vertically upward should have sufficient throw to reach at least ceiling height, and some manufacturers recommend that the throw be continued some distance across the ceiling. It should not reach so far as the opposite wall (or an opposing air stream) in the heating season, however. Appendix C presents data on perimeter slot diffusers as rated by one manufacturer. These ratings give throw for both a 20F temperature difference cooling situation and for the 0°F temperature difference, "isothermal" condition. In using this application data the manufacturer recommends that the outlet be designed to provide sufficient throw to reach the ceiling and continue across the ceiling to a point about 15 feet from the opposite wall. If the room is less than 15 feet wide, the stream should reach the ceiling. Figure 44 defines these ideas in more graphic form.

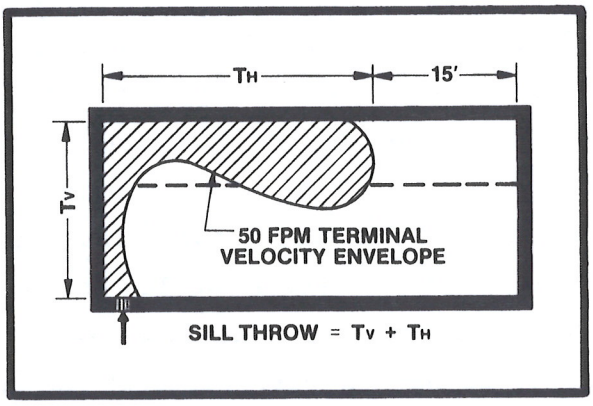

Figure 44

A perimeter sill slot diffuser to supply air to the real estate office should be located along the windows at the street end of the office. The outlet may be taken as being 2 feet above the floor. The vertical throw is then 12 - 2 or 10 feet, and the horizontal throw is 50 - 15 or 35 feet, if we follow the manufacturers recommendation. The total throw should therefore be about 45 feet.

Taking the length of slot available as 18 feet and the active length 70% of that, the total active length is 12.6 ft. The cfm/foot is 1700/12.6 = 135. Inspection of the rating tables (Appendix "C") shows a throw of 32 feet for 125 cfm/foot and 36 feet for

150 cfm/foot for a 2" slot. At the selected flow of 135 cfm/foot the throw would be about 34 feet, which may not be enough to provide complete room coverage.

One alternative that should be considered is to supplement the slot diffuser with another supply air means at the end of the office remote from the street. This might consist of ceiling diffusers, for instance. While such a system would be more expensive than any considered so far, it would have a very distinct advantage during the heating season. The transmission heating load could be completely handled by the slot diffuser air stream along the windows. Since lights and people loads are still cooling loads away from the street, cool air could be supplied to the distribution outlets in that zone to keep conditions from becoming uncomfortably warm.

Before leaving perpendicular slot diffusers, it should be pointed out that Appendices B and C are presented as representative data only. The detailed design of the diffuser affects both throw and drop; therefore, each manufacturer's application data should be used for specific design information on his product.

PARALLEL FLOW SLOT

Parallel slot diffusers are available in individual lengths; continuous lengths attached to a single plenum; or continuous lengths with dummy inactive sections. Air is discharged parallel to the ceiling in an expanding pattern. Discharge may be either in a single direction, or in two directions depending on the application requirements.

The ideal application would be a continuous wall-to-wall slot whose 70% active discharge would blanket the ceiling. The high induction capabilities of the outlet would maximize ceiling effect and result in mixing of primary and secondary air well above the occupied zone. The result would be efficient draftless air diffusion within the occupied zone.

SPREAD

When outlets are not installed wall-to-wall, the air diffusion pattern should be checked to insure adequate coverage of the ceiling. Figure 45 indicates that the linear slot will, at the end of its maximum throw, spread out to cover an area 1.25 to 4 times the length of the outlet. For example the spread of a 4 Ft. slot will spread the discharge to cover a

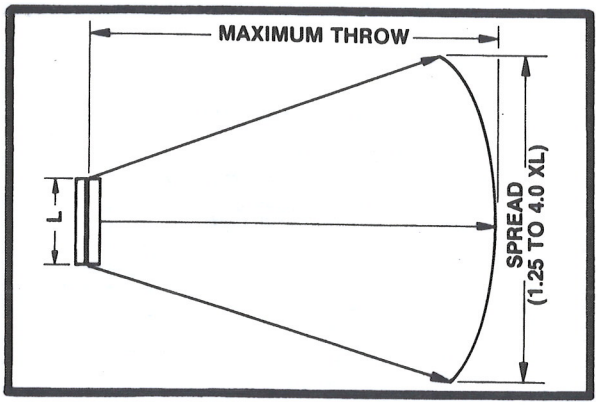

Figure 45

ceiling area 5 Ft. to 16 Ft. (depending on the manufacturers product).

THROW

For rooms lengths of more than two to three times the ceiling height multiple straight lines of diffusers should be located in the ceiling. Some general rules apply regarding the location of parallel slots relative to one another and relative to walls.

To avoid dumping of high velocity cool air into the occupied zone, Figure 46 shows that outlets should be separated by a distance no less than twice the outlet minimum throw. Resultant room velocities in the occupied zone should be 25 to 50 FPM.

The maximum distance covered by an outlet should be no more than the maximum throw. Consequently the maximum distance between two outlets should be no more than twice the

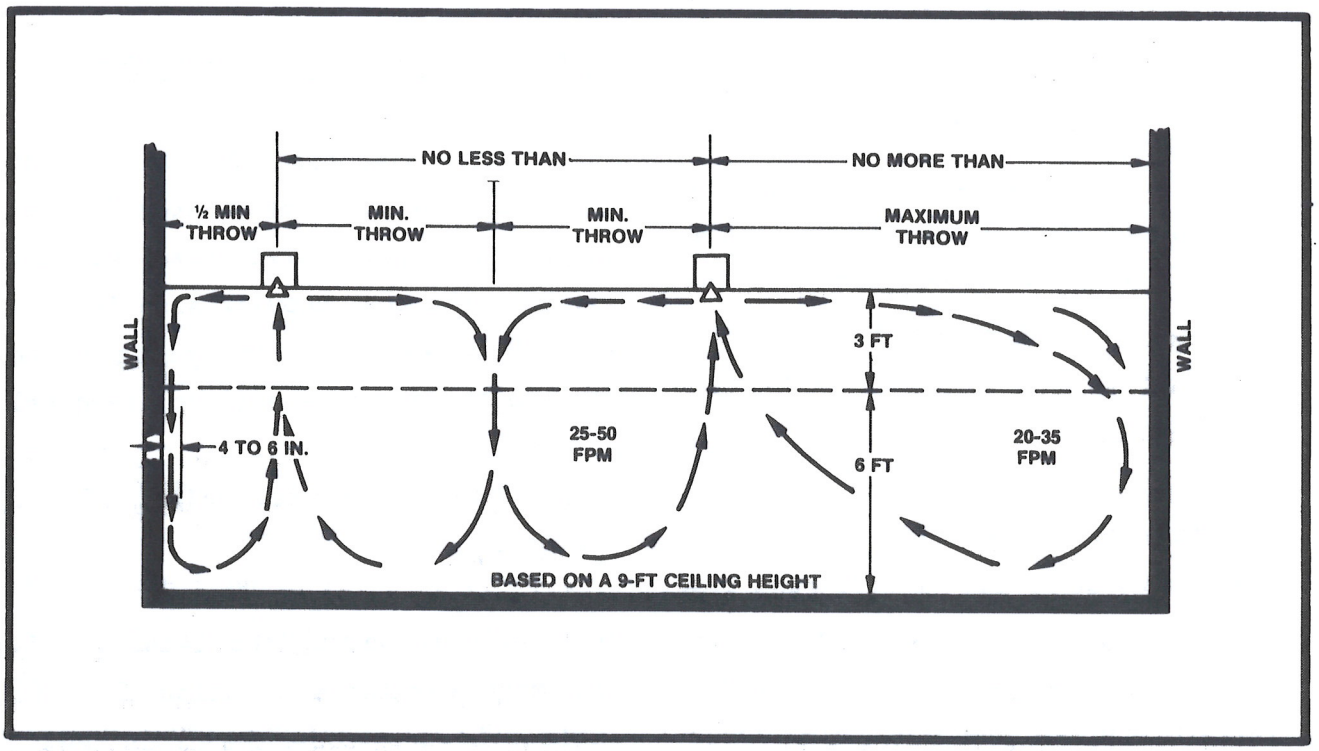

Figure 46

maximum throw. The resultant occupied zone velocities should be between 20 to 35 FPM.

When projecting air toward a wall the outlet can be located up to a minimum distance from the wall of 1/2 the minimum throw. In this situation high velocity air will blanket the outside wall in a 4 to 6 inch layer. Consequently the wall should remain free of desks, tables, etc., which could deflect the high velocity air stream into the room.

DROP

As Figure 46 indicates most manufacturers rate their parallel slot diffusers on the basis of a 9 foot ceiling with a 6 Ft. occupied zone. The close proximity of the slot to the ceiling, maximizes "Ceiling Effect." Thus the total air envelope hugs the ceiling, and only starts to enter the occupied zone at the end of the maximum throw. Drop is therefore not a problem with ceiling heights of 9 Ft. or higher.

For ceilings lower than 9 Ft. the rated maximum throw should be decreased by 1 Ft. and the minimum rated throw increased by 1 Ft. for every foot the ceiling is below 9 Ft.

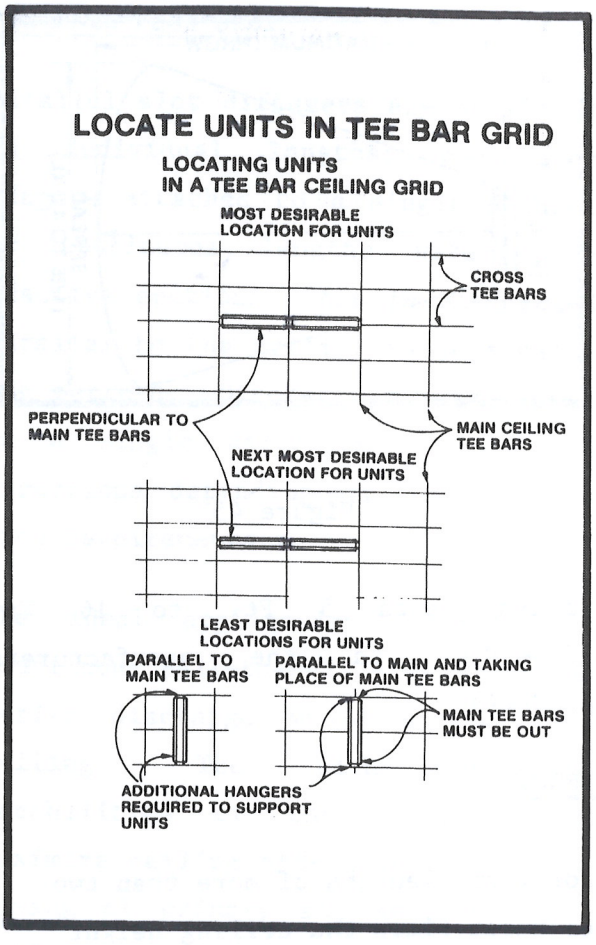

Figure 47

LOCATION OF UNITS IN "T" BAR GRID

The most popular type of ceiling used in commercial buildings is the "T" bar suspended type. Grid size varies, however, the most popular size is 2' x 4'. Parallel slots are designed to replace the cross tees (4 Ft. lengths) - leaving the main tees in tact to support the structural weight of the ceiling.

As Figure 47 shows, the least costly and most desirable location for the outlets is to replace the cross tees.

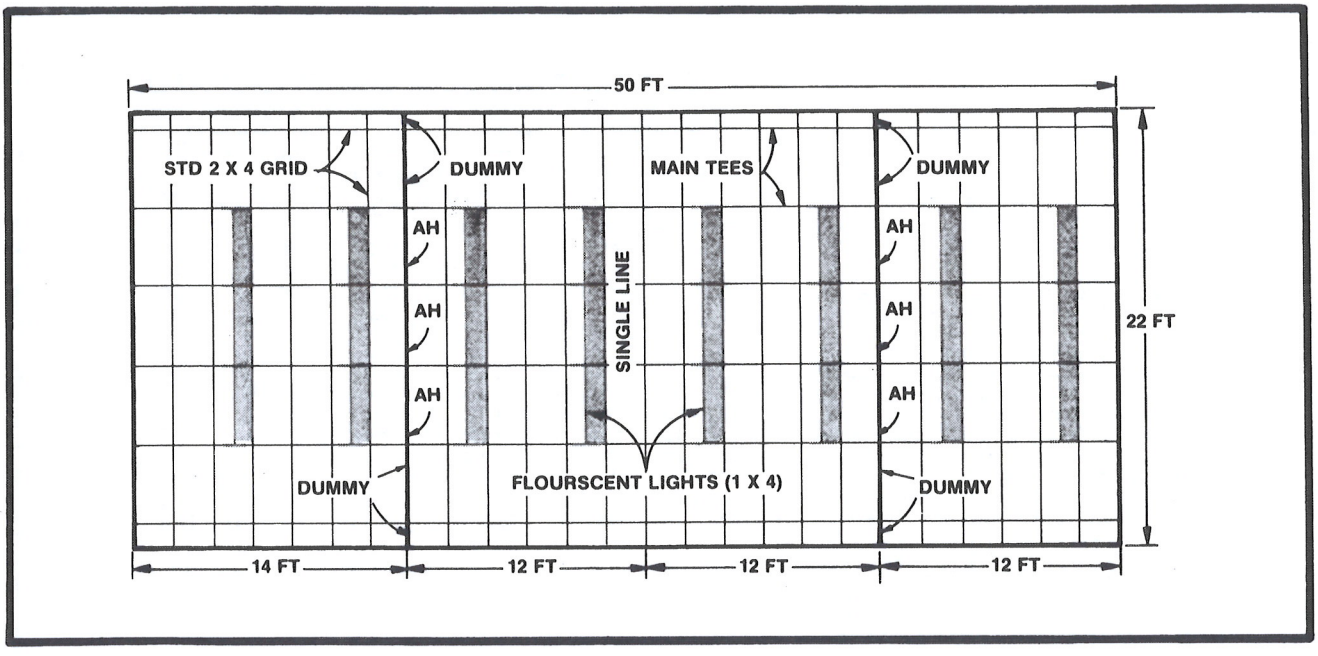

Figure 48

While less desirable, the outlets can be run anywhere between the cross tees or parallel to the main tees, however, more hangers are required.

Obtaining a reflected ceiling plan (looking down from above the ceiling) will aid in locating the outlets in a manner compatible with tees and lighting fixtures.

TYPICAL SELECTION

As an example of the layout and selection of parallel slot diffusers, consider the same 50 Ft. x 22 Ft. real estate office discussed earlier. You will recall the ceiling height was 12 Ft.; the room required 1700 CFM; and the outlet Δt was 20F.

In a rectangular room like this the main tees in a standard 2 x 4 suspended ceiling would most likely run in the 50 Ft. length. 4 Ft. cross tees would run the 22 Ft. length. Figure 48 shows the 2 x 4 ceiling grid with the location of recessed 1 Ft. x 4 Ft. flourescent lighting fixtures.

SINGLE LINE APPROACH

The simplest approach would be to use two-way blow slots located at 50/2 = 25 Ft. distances from either wall. Since the slot diffusers replace the cross tees and must be integrated with the lighting fixtures, Figure 48 shows that a single line of diffusers would have to be located 26 Ft. and 24 Ft. respectively from the walls (closest to the center as possible).

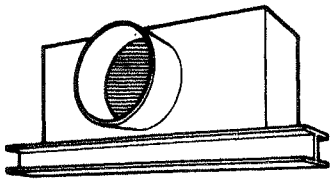

*NOTES:
1. Data is the suggested minimum and maximum coverages the unit can handle in a typical installation and still maintain desired room conditions in cooling mode.
2. Distances are measured from the centerline of the unit to the nearest major obstruction. The minimum throw shown is for 2 units blowing at each other (Space units at 2 times minimum value on-center). When blowing against a wall, this distance may be halved.
3. Discharge velocity at minimum distance from diffuser is approximately 150 fpm. Velocity at maximum distance is approximately 50 fpm.
4. Data is based on area with a 9 ft ceiling. For areas with higher ceilings, values may be reduced 1 ft per each ft increase in ceiling height. For specific installations, minimum values can be reduced if properly qualified.

LINEAR SLOT DIFFUSER SELECTION TABLE

AIR DELIVERY (cfm)			THROW (IN FT)*				STATIC PRESS. DROP (IN. WG)	
AG DIFFUSERS			TWO-WAY		ONE-WAY			
2 FT	4 FT	5 FT	MIN	MAX	MIN	MAX	6 IN. INLET	8 IN. INLET
30	60	80	2.5	7.5	3.8	10.0	0.03	0.02
40	80	105	3.2	10.0	4.5	12.5	0.05	0.04
60	120	160	4.7	15.0	6.0	18.0	0.11	0.09
80	160	215	6.8	20.0	8.2	23.3	0.20	0.16
100	205	270	9.0	25.0	10.5	28.5	0.30	0.26
AH STYLE DIFFUSERS								
60	120	150	2.4	7.4	3.5	8.5	—	0.03
80	160	200	3.2	10.0	4.2	12.2	—	0.05
100	200	250	4.0	12.5	5.0	14.0	—	0.08
120	240	300	5.0	15.0	6.2	18.0	—	0.11
140	280	350	5.6	17.6	7.1	21.4	—	0.16
160	320	400	6.6	20.0	8.5	24.6	—	0.20
200	400	500	9.0	25.0	11.0	31.0	—	0.32

Figure 49

REQUIRED THROW

Figure 49 represents one manufacturer's ratings for 2 Ft., 4 Ft., and 5 Ft. slots that are designed for a tee-bar ceiling. Note 4 indicates the ratings are based on 9 Ft. ceilings, and throw figures published are to be adjusted for other ceiling heights. This office has a 12 Ft. ceiling height and requires the outlet to throw the air 26 Ft. Inspection of the ratings reveals that a four foot AH model delivering a maximum of 400 CFM can throw the air 25 Ft. maximum with a 9 Ft. ceiling. With a 12 Ft. ceiling this same model could effectively only throw the air 25 - 3 = 22 Ft. maximum. Thus locating one single line of slot diffusers in the room would not adequately satisfy the throw requirements. (22 Ft. is less than the required 26 Feet). Stagnant regions would form in the occupied zone.

DOUBLE LINE APPROACH

Using two lines of outlets will offer better throw coverage. With two-way outlets each line of diffusers should be located at approximately 50/4 = 12.5 Ft. Replacing cross tees and avoiding lighting fixtures results in the layout as shown in Figure 48.

HOW MANY OUTLETS

Minimizing the number of active slot diffusers minimizes the installed cost of the job. Reviewing the ratings in

Figure 49 once again reveals a maximum of 400 CFM is available with a four foot long slot. 5 Ft. slots would not be compatible with the 2 x 4 ceiling grids. The minimum number of outlets is therefore 1700 CFM/400 CFM = 5. With two lines of outlets it is advisable to have equal numbers of active slots for good air motion. Three outlets per line is thus advisable (a total of 6 outlets). Each outlet must therefore deliver 1700/6 = 283 CFM.

CHECKING THROW

A review of the layout in Figure 48 shows the maximum required throw with a 12 Ft. ceiling is 14 Ft. Inspection of the ratings in Figure 49 reveals that a 4 Ft. long two-way blow AH unit delivering 283 CFM will have a maximum throw of about 17.6 Ft. and a minimum throw of 5.6 Ft. when used with a 9 Ft. ceiling. When used with a 12 Ft. ceiling the maximum throw becomes 14.6 Feet. The selection is adequate since the available throw (14.6 Feet) exceeds the required throw (14.0 Feet).

CHECKING THE SPREAD

Each 4 Ft. slot is capable of spreading the air up to four times its length or 4 x 4 = 16 Feet. This means a path of (16-4)/2 = 6 Feet can exist on each end of an outlet. A review of Figure 47 reveals a maximum of 5 Ft. of ceiling exists without a slot. The spread of the AH linear slots adequately covers the ceiling. In the layout shown dummy (inactive) slots will be used to fill the 5 Ft. spaces on either end of the 3 active slots.

ALTERNATE LAYOUT

Each line of outlets in Figure 48 could also be satisfactorily arranged as follows: 1 Ft. dummy slot; 4 Ft. active slot, 4 Ft. dummy slot, 4 Ft. active slot, 4 Ft. dummy slot, 4 Ft. active slot and 1 Ft. dummy slot.

CHECKING FOR DROP

The closest wall is 12 Ft. away from the outlet. The maximum rated throw is 17.6 Ft. With a 12 Ft. ceiling, 6 Ft. of wall exists above the occupied zone. The outlet will therefore project the total air envelope across the 12 Ft. of ceiling to the wall and then (17.6 - 12 = 5.6 Feet) down the wall. The total air envelope will not enter the occupied zone.

The closest distance between two outlets in Figure 47 is 24 Feet. Two times the outlet minimum throw is (2 x 5.6 = 11.2 Ft). Since the units are farther apart than 11.2 Feet, there will be no problem with the two air

streams colliding and dumping high velocity cold air into the occupied zone.

HORIZONTAL DISCHARGE FROM SOFFIT

When a parallel slot diffuser is mounted in the bottom of a soffit (Figure 50), and set to discharge air

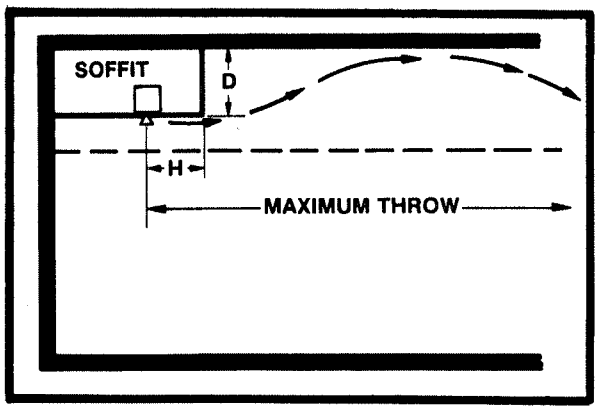

Figure 50

horizontally, there must be a flat horizontal surface (H) to help establish ceiling effect. This horizontal distance (H) should be 6 inches long for each inch of slot width. The depth of the soffit (D) also impacts ceiling effect. The more soffit depth the less ceiling effect. The unit throw decreases as the total air envelope leaves the ceiling sooner to curl back into the occupied zone. Soffit depths greater than 2 feet require consultation with the manufacturer to establish accurate drop characteristics. With a 2 Ft. drop the maximum throw will be reduced approximately 20%.

SELECTION OF CEILING DIFFUSERS

Ceiling diffusers are normally used for distributing air over the ceiling in a direction parallel to the ceiling. Some types, however, can be adjusted to blow directly down to provide spot cooling or heating. They are available in round, square, and rectangular shapes to match architectural and performance requirements.

SPREAD

Since round and square diffusers generally project air equally in all directions, they best serve a square area. Therefore, they should be located as nearly as possible in the center of equal squares within a room.

In some instances, because of dimensional relationships or structural conditions, a diffuser must serve a rectangular area. Situations like this are best handled by selecting a multiple direction outlet which can have different throws and CFMS leaving the same outlet simultaneously, but in different directions. Square and round diffusers with adjustable cores or vanes are best suited for this application.

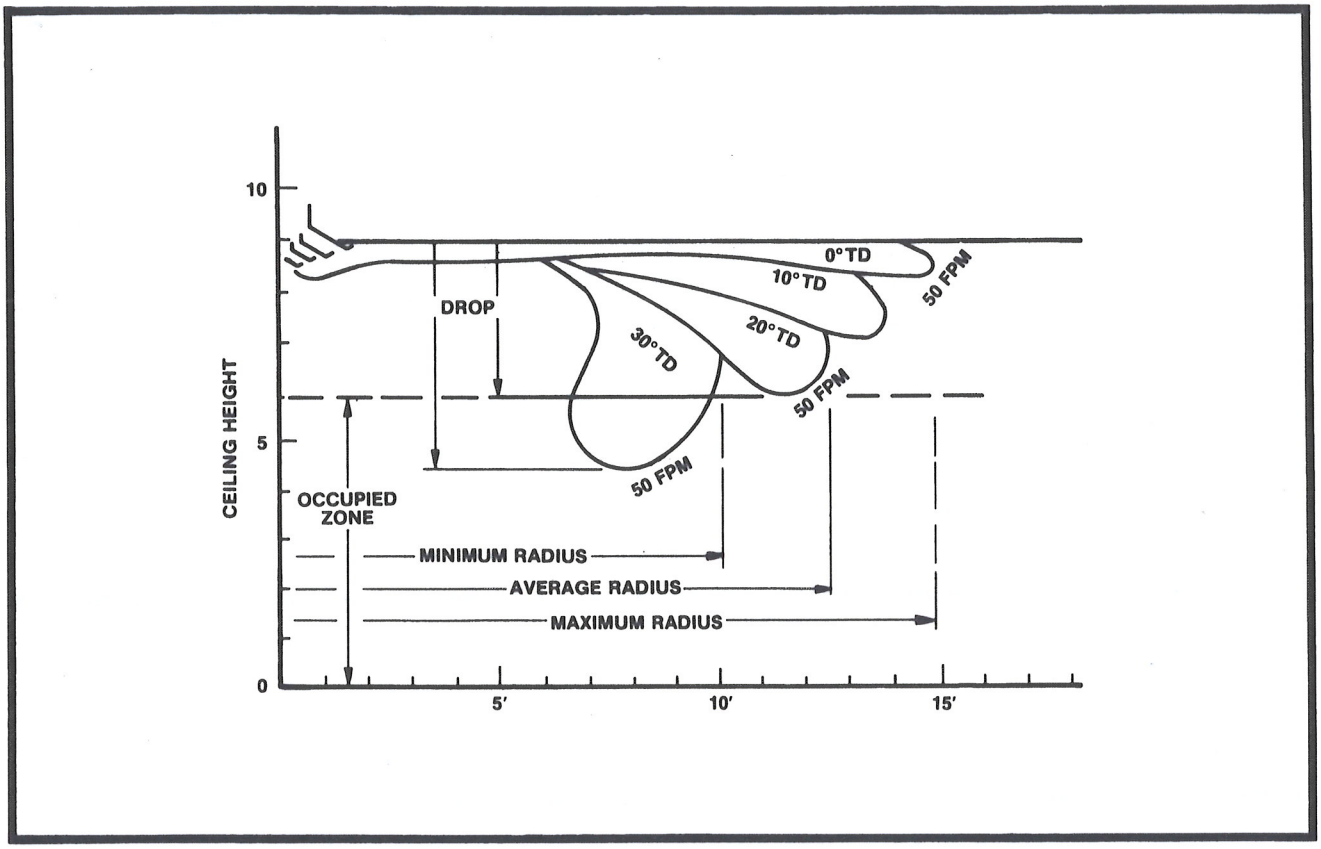

Figure 51

DROP

Most manufacturers of ceiling diffusers base their ratings on 9 Ft. ceiling height and do not show "drop" as part of their catalogs. Instead, the effect of drop is incorporated into the recommendations regarding throw.

Figure 51 shows the jet projection from a 12" diffuser handling 850 CFM while mounted in an open area with no restricting walls or opposing air steams. It shows that air patterns at various outlet temperature differentials, and the effect of temperature difference on drop. A 20F outlet Δt is common for most air conditioning applications and Figure 51 shows that under these conditions the total air envelope at a terminal velocity of 50 FPM remains above the occupied zone.

Thus when a manufacturer publishes data based on an outlet Δt of 20F, the throw (radius of diffusion) information shown for a terminal velocity of 50 FPM will automatically result in a drop which will not penetrate the occupied zone.

Unfortunately, not all manufacturers rate their ceiling outlet with a 20F

RADIUS OF DIFFUSION
10" Neck Diameter, 1000 Fpm Neck Velocity, Isothermal Air

TITUS (TMA) 545 Cfm	KRUEGER (RA2) 545 Cfm	CARNES (DA5) 545 Cfm
6 ft. @ 150 fpm	7 ft. @ 150 fpm	Range
8 ft. @ 100 fpm	9 ft. @ 100 fpm	10 - 17 ft.
14 ft. @ 50 fpm	11 ft. @ 75 fpm	

Figure 52

outlet Δt. Many rate their outlets based on isothermal air (0°F outlet Δt). Figure 51 clearly shows that the throw for isothermal air is longer than that for 20F Δt air for the same terminal velocity. The drop is also less. The problem becomes how to relate isothermal air ratings to 20F Δt ratings.

One manufacturer states, and another confirms, that the throw at an air stream velocity of 100 fpm with isothermal air is approximately equal to throws at 50 fpm air stream velocity with a 20F differential between room and supply air temperatures.

If the throw at 50 fpm air stream velocity with 20F temperature difference is desirable, and equal to that at 100 fpm with isothermal air, then the selection should be made at an air stream velocity of 100 fpm from the manufacturer's ratings for isothermal air. The resulting average room air motion will be 30 fpm or less, and the total air envelope will not drop into the occupied zone.

THROW

Since the throw of a ceiling diffuser is usually multidirectional the term "Radius of Diffusion" is commonly used to mean the same thing. Most manufacturers presently publish radius of diffusion figures at two or three terminal velocities, as illustrated in Figure 52.

Ideally the throw of a ceiling diffuser at 50 FPM terminal velocity should just reach a wall or opposing

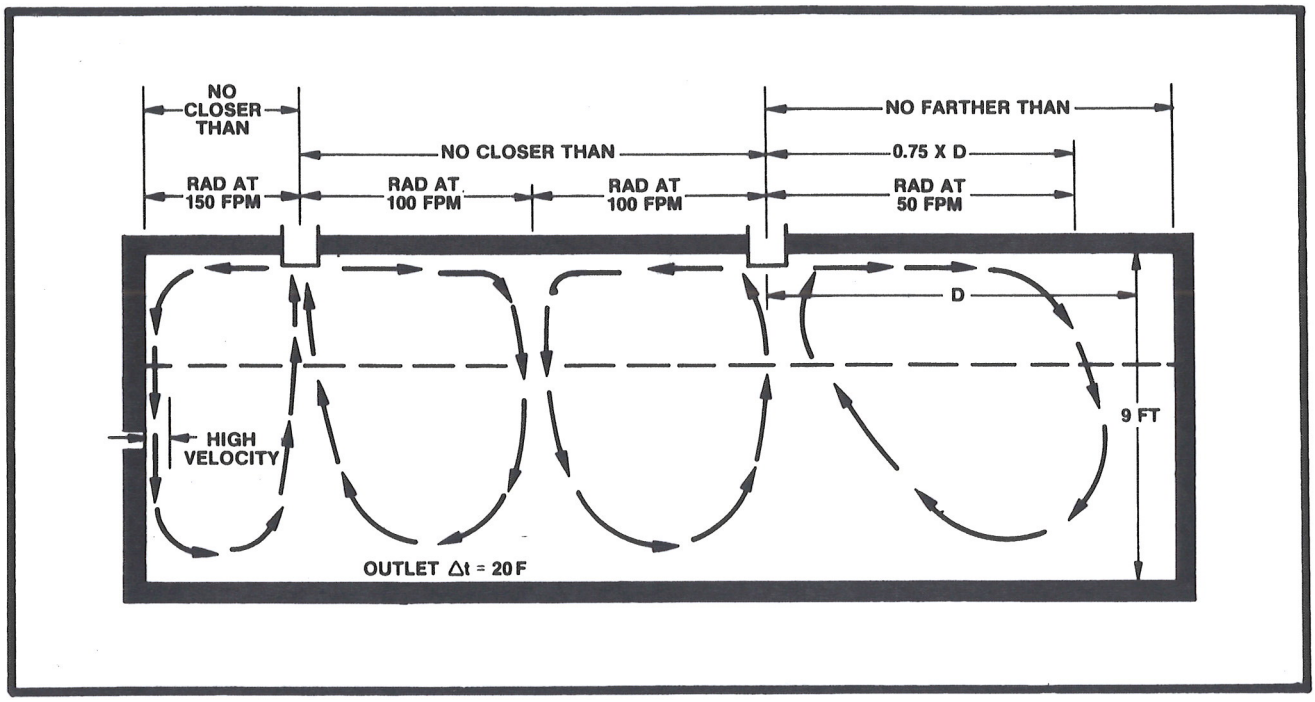

Figure 53

air stream from another diffuser. This is not always possible. Figure 53 shows the acceptable range of throw arrangements, and assumes ceiling outlets rated with a 9 Ft. ceiling height, and with an outlet Δt of 20F.

An outlet's throw at 50 FPM should, as a minimum, be 75% of the required throw (D) to a wall or opposing air stream. Outlet locations farther than this will produce stagnant regions in the occupied zone.

To avoid the dumping of cold air into the occupied zone by two opposing air streams, two outlets should not be located any closer than twice heir radius of diffusion at 100 FPM with 20F outlet Δt.

Normally a ceiling diffuser should be located no closer to a wall than its radius of diffusion at 100 FPM. However, in those applications where people or furniture will not be located next to the wall, the outlet can be located as close as its radius of diffusion at 150 FPM. Under these conditions a high velocity air stream will be projected down the wall creating a localized draft. Air velocities within the occupied zone will approach 50 FPM under these conditions.

IMPACT OF CEILING HEIGHT

Most manufacturer's ratings are based on a mounting height of 9' - 0". On higher ceilings, the space can accept

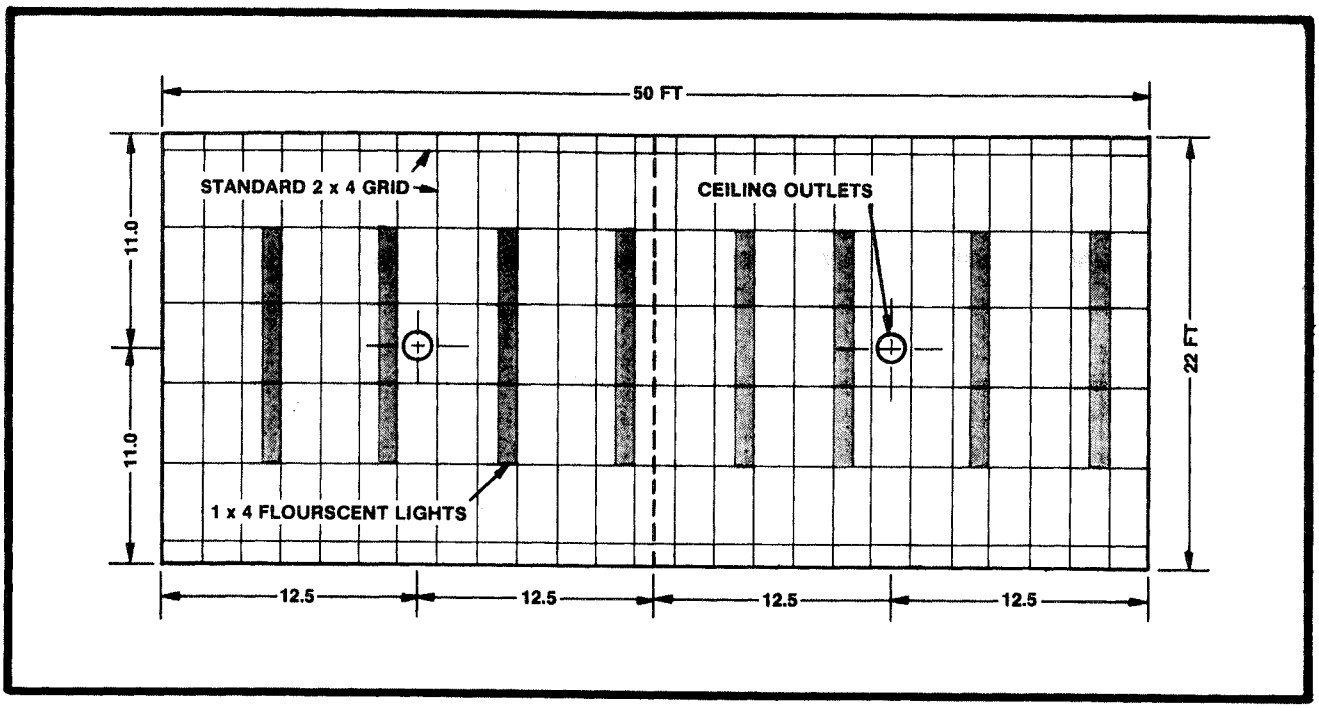

Figure 54

a larger throw. This can be reflected into the use of a smaller diffuser by increasing the allowable radius of diffusion by one foot for each foot increase in ceiling height.

MOUNTING OUTLETS ON DUCTS

Most ceiling diffusers are designed and rated for flush ceiling mounting. If installation is made on exposed ductwork, throws are reduced by a multiplier of 0.7 because of increased induction on the top side of the air leaving the diffuser.

The increased induction with a duct mounted diffuser changes direction of the primary and induced air to a downward angle. This may cause the air to enter the occupied zone before reducing to the selected terminal velocity, and this can cause complaint of draft. The manufacturer should be consulted for performance of diffusers when duct mounted.

SELECTION EXAMPLE

Appendix "D" presents rating information for the Krueger Model RS-2 diffuser. This may be used to select diffusers for the real estate office (Figure 54). The office requires 1700 CFM; has a ceiling height of 12 Feet; and is to be supplied by air 20F lower than the room temperature.

The simplest way in which to divide the space is into two equal parts each

NECK SIZE (in.)	10	12	14	16	18
CFM	850	850	850	850	850
THROW (ft)	10.0	10.0	10.0	10.0	7.8
NECK VELOCITY (Fpm)	1565	1081	795	607	480
ROOM NC (dB)	50	40	35	30	20

Figure 55

25 Ft. by 22 Ft. The resultant floor area is consistent with the circular air delivery of the outlets and approaches and the ideal "Square". With this approach each outlet will deliver 1700/2 = 850 CFM.

Ideally the diffuser should have a radius of diffusion at 50 FPM terminal velocity which just reaches the walls, or the opposing air stream. Being slightly rectangular will prevent this. Thus the objective is to find an outlet whose radius of diffusion reaches the closest wall (11 Feet). Considering an outlet might not throw the air exactly 11 Feet, the minimum throw acceptable would be 75% of the distance to the farthest wall or air stream (.75 x 12.5 = 9.4 Ft), thus the outlet should throw the air at 50 FPM with a 20F outlet Δt between 9.4 and 11.0 feet.

These two throw figures can be further adjusted because the ceiling height is 12 foot instead of the rating basis of 9 Ft. The throw may be increased 1 Ft. for each foot the ceiling is above 9 Ft. Thus the outlet can throw the air from 12.4 Feet to 14 Feet.

The Krueger ratings in the appendix "D" are based on isothermal air (0° Δt), thus the published throw at 100 FPM will be equivalent to the required throw with a 20F Δt at 50 FPM terminal velocity.

The ratings are thus inspected to find an outlet which will deliver 850 CFM such that the throw at 100 FPM falls between (12.4 Feet to 14.0 Feet) as maximums and (9.4 Ft. to 11.0 Ft.) as minimums the results are shown in Figure 55.

There are 4 possible outlets that can satisfy this application. The 18 inch outlet would not be satisfactory since the throw would be inadequate. The throw for the 10, 12, 14 or 16 inch outlets is adequate (between 9.4 and 11.0 feet).

The final selection is based on the acceptable noise level in the space. This can be done by selecting the appropriate outlet velocity. Referring back, Figure 38 shows that the outlet velocity or neck velocity for a private office should be between 500 and 800 FPM. Thus a 14 inch outlet should prove to be the least expensive outlet with a reasonable sound level in the space.

SOUND

No text on room air distribution would be complete without addressing the subject of sound. Thus far, the text has indirectly handled sound by limiting outlet and return velocities to reasonable ranges. Actual room sound levels, however, depend on the sound power level from the outlet, the number of outlets, the distance from the outlets, and the attenuation characteristics of the room. A complete treatment of this subject is found in the ASHRAE handbook, however, the following text presents a condensed approach to approximating room sound levels.

NOISE CRITERIA

Figure 56 shows a plot of noise criteria curves which are used as a basis for evaluating the acceptability

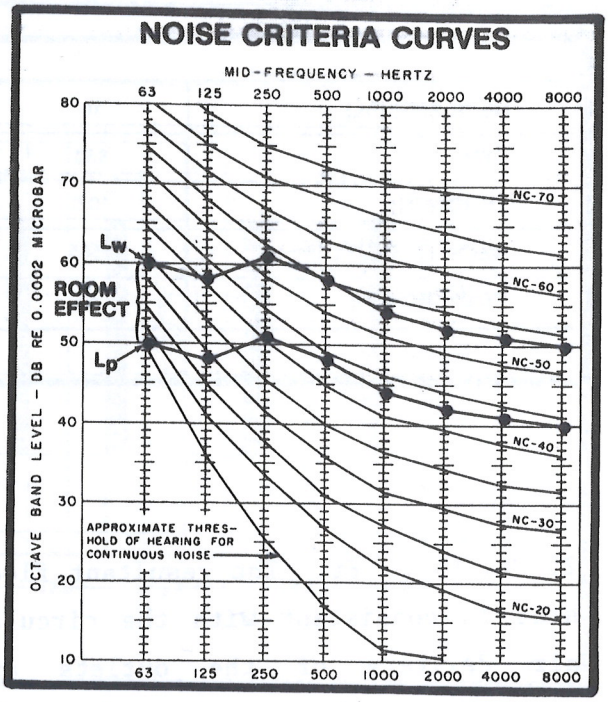

Figure 56

of sound in a space. The shape of each NC curve reflects the sensitivity of the human ear. The ear being more sensitive to higher frequency than to lower.

Plotted on the NC chart is an outlet sound power characteristic (L_W) measured in dicibels referenced to 10^{-12} watts. Also plotted is sound as it is received by the human ear. This is the sound pressure curve (L_p), and is measured in decibels referenced to .0002 microbars.

Thus the sound source is measured in soundpower and the sound received by the human ear is measured in sound pressure.

The difference between the two (L_W - L_p) is called room effect and reflects the decay in the sound power caused by (1) the distance between the outlet and the occupant, as well as (2) the sound absorptivity characteristics of the room. Typical values for room effect are 8dB, 10 dB, or 12dB. The "softer" the room the higher the room effect.

Figure 56 reflects a 10dB room effect which is normal for most general office spaces. Since the L_p curve does not exceed the NC curve of 44 NC in any of the eight octave (mid-frequency) bands, the performance of the outlet with a 10 dB room effect results in a room NC of 44.

Recommended space noise criteria limits as published in ASHRAE are shown in Figure 57. They vary with the type of application and are used to establish recommended sound pressure levels in a space.

NC DECIBEL LEVELS

Space	Low	Average	High
Residences (suburbia)	20	25	30
Residences (urban)	25	30	35
Apt. Buildings, Hotel Rooms	30	35	40
Hotels, Ballrooms, Banquet Halls	30	35	40
Hotel Public Spaces	35	40	45
Kitchens, Laundries, Garages	40	45	50
Hospital Rooms	25	30	35
Hospital Operating Rooms, Wards	30	35	40
Hospital Public Spaces	35	40	45
Offices — Board Rooms	20	25	30
Offices — Conference Rooms	25	30	35
Offices — Executive	30	35	40
Offices — Private	30	35	45
Offices — General	35	40	50
Offices — Computer			

Figure 57

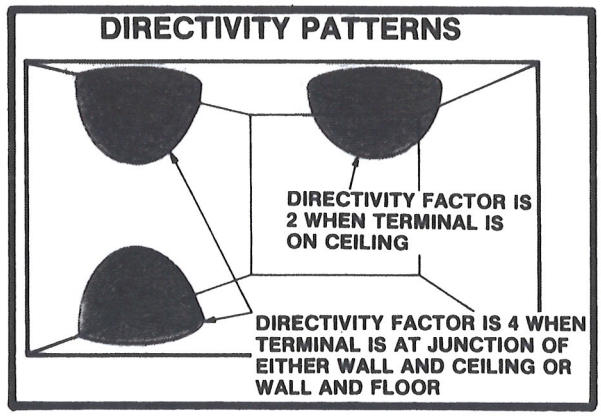

Figure 58

IMPACT OF DIRECTIVITY

Sound tends to radiate from its source in a spherical pattern. When an outlet is placed in a ceiling (Figure 58) only 1/2 a sphere is available.

Thus the intensity of sound doubles as it leaves a ceiling outlet. Its location is said to have a directivity factor of 2. The sound power ratings for outlets are based on a directivity factor of 2.

Should an outlet be placed near the junction of two surfaces, the directivity factor increases to 4. This doubles the sound power of the outlet and results in a 3dB increase in its sound rating. Placing an outlet in a corner would increase the direct factor to 8 and result in a 6dB increase in the outlet sound rating.

reading (83 + 3 = 86 dB). Now pair the result (86) with the next highest reading (92) and repeat the process. 92 - 86 = 6 dB. The final result is 92 + 1 = 93 dB.

TYPICAL EXAMPLE

Consider the real estate office defined by Figure 53. As you will recall two 14 inch round ceiling outlets were picked from figure 54 whose rated resultant room NC was 35 dB. The following paragraphs will take you through the steps required to arrive at the final room NC level.

STEP 1 - CHECK BASIS OF RATINGS

A review of the Krueger ratings in the Appendix reveals a room effect of 18 dB was assumed to produce the ratings. Normally a 10 dB room effect is typical for office spaces. The difference 18 - 10 = 8 dB must be added back to the 35 dB to reflect more accurately the outlet performance. The 14 inch outlet will therefore produce a room NC of 35 + 8 = 43 dB.

STEP 2 - CHECK DIRECTIVITY

Each outlet is located well toward the center of the ceiling and is not close to any walls or columns. Therefore, there is no directivity adjustment.

STEP 3 - CHECK ACCESSORIES

Balancing dampers will be needed for each outlet. Assume they are located in the ductwork 5 Feet upstream of the outlet and a review of the manufacturers data shows an extra 3 dB of sound will be generated. Each outlet now produces a room NC of 43 + 3 + 46 dB.

STEP 4 - MULTIPLE OUTLETS

The room is equipped with two 14 inch outlets - each producting an NC of 46 dB. The difference between the two sound sources is zero. Using Figure 59, the final room NC will therefore be 46 + 3 = 49 dB.

Inspecting Figure 57 for private offices indicates that on the average a NC level of 35 should not be exceeded - certainly no higher than 45. Consequently the two 14 inch outlets will result in a room sound level that is unacceptable (49 vs 45 NC).

Going back to Figure 55 and selecting two 16 inch outlets would result in a room NC level of 30 + 8 + 3 + 3 = 44. This would be acceptable (44 vs 45 NC). However, from a noise standpoint the selection is admittedly on the high side.

IMPACT OF DAMPERS

Dampers are used to throttle air being delivered to outlets. In doing so the pressure drop across the damper increases, and turbulance is created. The added turbulance creates sound which is carried by the supply air and increases the NC level produced by the outlet. The magnitude of NC increase is related to the distance between the damper and the outlet.

With the damper mounted on (or in close proximity to) the outlet, a 30% closure results in a 9 dB increase in outlet NC. Under the same conditions a 50% closure results in an 18 dB increase in outlet NC.

However, locating the damper in the supply duct 5 Ft. upstream of the plenum results in a 0 and 3 dB increase in outlet NC for damper closures of 30% and 50% respectively. Thus it is clearly advantageous to locate dampers remotely from the outlets.

Since the damper becomes a sound source itself and can radiate sound directly thru ceiling into the space, it should be located remotely from the outlet in such a way that its direct sound contribution is prevented from reaching the space.

IMPACT OF MULTIPLE OUTLETS

With more than one sound source (outlet or return) in the room, the amount of sound power entering the space increases. Two outlets of equal sound power will double the sound power in a room. Since sound is expressed in decibels, doubling the sound power results in a 3 dB increase in sound rating - not twice the outlet dB rating.

COMBINING TWO SOUND LEVELS

DIFFERENCE BETWEEN TWO LEVELS TO BE COMBINED, dB	0-1	2-4	5-9	10 and more
Number of decibels to be added to higher level to obtain combined level	3	2	1	0

Figure 59

Adding sound sources together is based on the difference in dB ratings for each of them. Figure 59 can be used to add together multiple outlets. To illustrate the procedure, consider three sound sources: 82dB, 83dB and 92dB. Arrange the sound sources sequentially from lower to higher.

Pair the two smaller readings (82 & 83). Since the difference is 1 dB, 3dB must be added to the higher

SUMMARY

As stated earlier, the object of air distribution is to create an acceptable condition of temperature and air motion in the occupied zone of the conditioned space. It has been the intent of this text to familiarize the reader with those principals necessary to accomplish this end. Diligent study and application of these principals should result in pleasing comfort conditions for the end user, and a profitable job for the installer.

APPENDIX

TABLE OF CONTENTS

RATINGS FOR HIGH SIDEWALL OUTLETS . . . . . A - 1

RATINGS FOR PERPENDICULAR SLOTS
IN A HIGH SIDEWALL LOCATION . . . . . A - 2

RATINGS FOR PERPENDICULAR SLOTS
IN A PERIMETER FLOOR OR WINDOW SILL APPLICATION . . . . A - 3

RATINGS FOR ROUND CEILING DIFFUSERS . . . . . A - 4

WORK SESSION. . . . . A - 5

TABLE 21—WALL OUTLET RATINGS, FOR COOLING ONLY

For Flat Ceilings

OUTLET VELOCITY		250 FPM					375 FPM					500 FPM					750 FPM				
STATIC PRESSURE STANDARD OUTLET		Str B = .01, 22½° = .01 45° = .01					Str B = .013, 22½° = .015 45° = .019					Str B = .024, 22½° = .028 45° = .035					Str B = .051, 22½° = .061 45° = .08				
STATIC PRESSURE WITH METERING PLATE		Str B = .01, 22½° = .015 45° = .028					Str B = .024, 22½° = .043 45° = .065					Str B = .061, 22½° = .082 45° = .118					Str B = .175, 22½° = .19 45° = .27				
Nom. Size of Outlet (and Free Area)	Vane Setting	Air Quantity (cfm)	Blow (ft)	Temp Diff (F) 15	20	25	Air Quantity (cfm)	Blow (ft)	Temp Diff (F) 15	20	25	Air Quantity (cfm)	Blow (ft)	Temp Diff (F) 15	20	25	Air Quantity (cfm)	Blow (ft)	Temp Diff (F) 15	20	25
				Min Clg Ht					Min Clg Ht					Min Clg Ht					Min Clg Ht		
8 x 4 (16.9)	Straight	30	3.5	6.5	7.0	7.0	44	7.0	7.5	7.5	8.0	59	10.0	7.5	8.0	8.5	89	17.0	8.5	9.0	9.0
	22½°		2.5	6.5	6.5	6.5		5.1	6.5	7.0	7.0		7.5	7.0	7.5	7.5		13.0	7.5	7.5	8.0
	45°		1.8	6.0	6.0	6.5		3.5	6.5	6.5	7.0		5.0	6.5	6.5	7.0		9.0	6.5	7.0	7.0
10 x 4 (21.7)	Straight	37	3.5	6.5	7.0	7.5	57	7.4	7.5	7.5	8.0	75	10.5	7.5	8.0	8.5	112	18.0	8.5	9.0	9.0
	22½°		2.5	6.5	6.5	7.0		5.5	6.5	7.0	7.0		8.0	7.0	7.5	7.5		13.0	7.5	8.0	8.0
	45°		1.8	6.0	6.0	6.5		3.7	6.5	6.5	7.0		5.4	6.5	6.5	7.0		9.0	6.5	7.0	7.0
12 x 4 (24.6)	Straight	44	3.5	6.5	7.0	7.5	68	7.5	7.5	7.5	8.0	91	11.0	8.0	8.0	8.5	136	18.0	8.5	9.0	9.5
	22½°		2.5	6.5	6.5	7.0		5.5	7.0	7.0	7.5		8.1	7.0	7.5	7.5		13.0	7.5	8.0	8.5
	45°		1.8	6.0	6.5	6.5		3.9	6.5	6.5	7.0		5.5	6.5	7.0	7.0		9.0	6.5	7.0	7.0
16 x 4 (35.9)	Straight	61	3.7	7.0	7.0	7.5	92	7.9	7.5	7.5	8.0	122	11.0	8.0	8.0	8.5	183	19.0	8.5	9.0	9.5
	22½°		2.7	6.5	6.5	7.0		6.0	7.0	7.0	7.5		8.1	7.0	7.5	7.5		14.0	7.5	8.0	8.5
	45°		2.0	6.0	6.5	6.5		4.0	6.5	6.5	7.0		5.5	6.5	7.0	7.0		10.0	6.5	7.0	7.5
20 x 4 (45.5)	Straight	77	4.0	7.0	7.0	7.5	115	8.0	7.5	8.0	8.0	154	11.5	8.0	8.0	8.5	231	20.0	8.5	9.0	9.5
	22½°		3.0	6.5	6.5	7.0		6.0	7.0	7.0	7.5		8.5	7.5	7.5	8.0		15.0	7.5	8.0	8.5
	45°		2.0	6.0	6.5	6.5		4.0	6.5	6.5	7.0		6.0	6.5	7.0	7.0		10.0	6.5	7.0	7.5
24 x 4 (55.0)	Straight	93	4.1	7.0	7.0	7.5	139	8.0	7.5	8.0	8.0	185	11.5	8.0	8.0	8.5	278	20.0	8.5	9.0	10.0
	22½°		3.1	6.5	7.0	7.0		6.0	7.0	7.0	7.5		8.5	7.5	7.5	8.0		15.0	7.5	8.0	8.5
	45°		2.0	6.0	6.5	6.5		4.0	6.5	6.5	7.0		6.0	6.5	7.0	7.0		10.6	6.5	7.0	7.5
30 x 4 (68.3)	Straight	116	4.2	7.0	7.0	7.5	175	8.0	7.5	8.0	8.0	233	12.0	8.0	8.0	8.5	349	21.0	8.5	9.5	10.0
	22½°		3.1	6.5	7.0	7.0		6.0	7.0	7.5	7.5		9.0	7.5	7.5	8.0		16.0	7.5	8.0	8.5
	45°		2.1	6.0	6.5	6.5		4.0	6.5	6.5	7.0		6.0	6.5	7.0	7.0		11.0	7.0	7.0	7.5
36 x 4 (83.5)	Straight	140	4.4	7.0	7.5	7.5	210	8.0	7.5	8.0	8.0	279	12.0	8.0	8.5	9.0	420	21.0	9.0	9.5	10.0
	22½°		3.3	6.5	7.0	7.0		6.0	7.0	7.5	7.5		9.0	7.5	7.5	8.0		16.0	7.5	8.5	8.5
	45°		2.2	6.0	6.5	6.5		4.0	6.5	6.5	7.0		6.0	6.5	7.0	7.0		11.0	7.0	7.0	7.5
8 x 6 (26.5)	Straight	52	5.0	7.5	7.5	8.0	77	9.5	8.0	8.0	8.5	103	13.0	8.5	9.0	9.0	155	24.0	8.5	10.0	10.5
	22½°		3.8	7.0	7.0	7.5		7.0	7.0	7.5	8.0		10.0	7.5	8.0	8.5		18.0	8.0	8.5	9.5
	45°		2.5	6.0	6.5	6.5		4.8	6.5	7.0	7.0		6.0	7.0	7.0	7.5		12.0	7.0	7.5	8.0
10 x 6 (34.0)	Straight	66	5.5	7.5	8.0	8.0	98	10.0	8.0	8.5	9.0	131	15.0	9.0	9.5	10.0	196	27.0	10.0	10.5	11.5
	22½°		4.1	7.0	7.5	7.5		7.5	7.5	8.0	8.5		11.0	8.0	8.5	9.0		20.0	8.5	9.0	10.0
	45°		2.8	6.5	7.0	7.0		5.0	7.0	7.0	7.5		7.0	7.0	7.5	7.5		14.0	7.5	7.5	8.0
12 x 6 (41.6)	Straight	80	6.0	7.5	8.0	8.5	119	11.0	8.0	9.0	9.5	159	15.0	9.0	9.5	10.0	238	28.0	10.0	11.0	11.5
	22½°		4.5	7.0	7.5	7.5		8.1	7.5	8.0	8.5		11.0	8.0	8.5	9.0		21.0	9.0	9.5	10.0
	45°		3.0	6.5	7.0	7.0		5.5	7.0	7.0	7.5		7.0	7.0	7.5	7.5		14.0	7.5	8.0	8.0
16 x 6 (56.6)	Straight	107	6.2	8.0	8.0	8.5	161	12.0	8.5	9.0	9.5	214	16.0	9.5	10.0	10.5	321	30.0	11.0	11.5	12.5
	22½°		4.7	7.0	7.5	7.5		9.0	8.0	8.0	8.5		12.0	8.5	9.0	9.5		22.0	9.5	10.0	10.5
	45°		3.2	6.5	7.0	7.0		6.0	7.0	7.0	7.5		8.0	7.5	7.5	8.0		15.0	7.5	8.0	8.5
20 x 6 (71.5)	Straight	135	6.6	8.0	8.5	9.0	202	12.0	9.0	9.5	10.0	269	17.0	9.5	10.0	11.0	403	32.0	11.5	12.0	13.0
	22½°		5.0	7.5	7.5	8.0		9.0	8.0	8.5	9.0		13.0	8.5	9.0	9.5		24.0	9.5	10.0	11.0
	45°		3.2	7.0	7.0	7.5		6.6	7.0	7.5	7.5		9.0	7.5	8.0	8.0		16.0	8.0	8.5	9.0
24 x 6 (86.5)	Straight	162	7.0	8.0	8.5	9.0	243	13.0	9.0	9.5	10.0	324	18.0	10.0	10.5	11.0	486	33.0	12.0	12.5	13.0
	22½°		5.1	7.5	8.0	8.0		10.0	8.0	8.5	9.0		13.0	8.5	9.0	10.0		25.0	10.0	10.5	11.0
	45°		3.5	7.0	7.0	7.5		6.5	7.0	7.5	8.0		9.0	7.5	8.0	8.5		17.0	8.0	8.5	9.1
30 x 6 (109.0)	Straight	203	7.0	8.5	8.5	9.5	304	13.0	9.0	10.0	10.5	406	19.0	10.0	11.0	11.5	609	34.0	12.0	12.5	13.5
	22½°		5.4	7.5	8.0	8.0		10.0	8.0	9.0	9.0		14.0	9.0	9.5	10.0		25.0	10.0	10.5	11.5
	45°		3.5	7.0	7.0	7.5		6.5	7.5	7.5	8.0		10.0	7.5	8.0	8.5		17.0	8.0	9.0	9.0
36 x 6 (131.3)	Straight	245	7.1	8.5	9.0	9.5	368	13.0	9.5	10.0	10.5	490	19.0	10.0	11.0	12.0	735	35.0	12.0	13.0	14.0
	22½°		5.5	7.5	8.0	8.5		10.0	8.5	9.0	9.5		14.0	9.0	9.5	10.0		26.0	10.0	10.5	11.5
	45°		3.5	7.0	7.5	7.5		6.5	7.5	8.0	8.0		10.0	8.0	8.0	8.5		18.0	8.5	9.0	9.5

K FACTOR				
Max Cfm/Sq Ft Outlet Wall Area	29.0	19.0	14.0	9.6
Min Cfm/Sq Ft Outlet Wall Area	8.7	5.7	4.2	2.9

TABLE 21—WALL OUTLET RATINGS, FOR COOLING ONLY (Cont.)

For Flat Ceilings

OUTLET VELOCITY		1000 FPM				1500 FPM				2000 FPM			
STATIC PRESSURE STANDARD OUTLET		Str B = .093, 22½° = .11, 45° = .14				Str B = .211, 22½° = .24, 45° = .32				Str B = .375, 22½° = .42, 45° = .565			
STATIC PRESSURE WITH METERING PLATE		Str B = .33, 22½° = .33, 45° = .475				Str B = .715, 22½° = .74, 45° = 1.15				Str B = 1.36			
Nom. Size of Outlet (and Free Area)	Vane Setting	Air Quantity (cfm)	Blow (ft)	Temp Diff (F) 15	20	25	Air Quantity (cfm)	Blow (ft)	Temp Diff (F) 15	20	25	Air Quantity (cfm)	Blow (ft)	Temp Diff (F) 15	20	25
				Min Clg Ht					Min Clg Ht					Min Clg Ht		
8 x 4 (16.9)	Straight	118	24	9.0	9.5	10.0	177	40	10.0	10.5	11.0	237	58	10.5	11.0	12.0
	22½°		18	7.5	8.0	8.5		30	8.5	9.0	9.5		44	8.5	9.0	9.5
	45°		12	6.5	7.0	7.5		20	7.0	7.0	7.5		29	7.0	7.0	7.5
10 x 4 (21.7)	Straight	150	26	9.0	9.5	10.0	224	42	10.0	10.5	11.5	299	60	10.5	11.5	12.0
	22½°		19	7.5	8.0	8.5		32	8.5	9.0	9.5		45	9.0	9.5	10.0
	45°		13	7.0	7.0	7.5		21	7.0	7.5	7.5		30	7.0	7.5	7.5
12 x 4 (24.6)	Straight	181	27	9.0	9.5	10.0	272	44	10.0	11.0	11.5	362	62	10.5	11.5	12.5
	22½°		20	8.0	8.5	9.0		33	8.5	9.0	9.5		47	9.0	9.5	10.0
	45°		14	7.0	7.0	7.5		22	7.0	7.5	7.5		31	7.5	7.5	8.0
16 x 4 (35.9)	Straight	244	28	9.0	10.0	10.5	366	46	10.0	11.0	12.0	488	65	11.0	12.0	12.5
	22½°		21	8.0	8.5	9.5		35	9.0	9.0	10.0		49	9.0	10.0	10.5
	45°		14	7.0	7.5	7.5		23	7.0	7.5	8.0		33	7.5	7.5	8.0
20 x 4 (45.5)	Straight	308	29	9.5	10.0	10.5	462	48	10.5	11.0	12.0	616	67	11.0	12.0	13.0
	22½°		22	8.0	8.5	9.5		36	9.0	9.5	10.0		50	9.5	10.0	10.5
	45°		15	7.0	7.5	7.5		24	7.5	7.5	8.0		34	7.5	8.0	8.0
24 x 4 (55.0)	Straight	370	30	9.5	10.0	10.5	556	49	10.5	11.5	12.0	740	68	11.5	12.0	13.0
	22½°		22	8.5	9.0	9.5		37	9.0	9.5	10.0		51	9.5	10.0	10.5
	45°		15	7.0	7.5	7.5		25	7.5	8.0	8.0		34	7.5	8.0	8.5
30 x 4 (68.3)	Straight	466	30	9.5	10.0	10.5	698	50	10.5	11.5	12.5	932	70	11.5	12.5	13.5
	22½°		22	8.5	9.0	9.5		37	9.0	9.5	10.0		53	9.5	10.0	11.0
	45°		15	7.0	7.5	7.5		25	7.5	8.0	8.0		35	7.5	8.0	8.5
36 x 4 (83.5)	Straight	558	31	9.5	10.0	11.0	840	51	11.0	11.5	12.5	1116	71	11.5	12.5	13.5
	22½°		23	8.5	9.0	9.5		38	9.0	9.5	10.0		53	9.5	10.5	11.0
	45°		16	7.0	7.5	8.0		26	7.5	8.0	8.0		36	7.5	8.0	8.5
8 x 6 (26.5)	Straight	206	36	9.5	11.0	12.0	310	59	12.0	12.5	13.5	412	82	12.5	14.0	15.0
	22½°		27	9.0	9.5	10.0		44	10.0	10.0	11.0		62	10.5	11.5	12.0
	45°		18	7.5	8.0	8.0		30	8.0	8.5	9.0		41	8.5	9.0	9.0
10 x 6 (34.0)	Straight	262	40	11.0	12.0	13.0	392	66	12.5	14.0	15.0	524	92	14.0	15.5	16.5
	22½°		30	9.5	10.0	11.0		50	10.5	10.5	12.0		69	11.5	12.5	13.0
	45°		20	8.0	8.5	9.0		33	8.5	9.0	9.5		46	9.0	9.5	10.0
12 x 6 (41.6)	Straight	318	41	11.5	12.5	13.5	476	67	13.0	14.0	15.5	636	94	14.5	15.5	17.0
	22½°		31	10.0	10.5	11.0		50	11.0	11.5	12.5		70	11.5	12.5	13.5
	45°		21	8.0	8.5	9.0		34	8.5	9.0	9.5		47	9.0	9.5	10.5
16 x 6 (56.6)	Straight	428	44	12.0	13.0	14.0	642	72	13.5	15.0	16.5	856	102	15.5	17.0	18.0
	22½°		33	10.0	11.0	11.5		54	11.5	12.0	13.0		77	12.5	13.5	14.5
	45°		22	8.0	9.0	9.0		36	9.0	9.5	10.0		51	9.5	10.0	11.0
20 x 6 (71.5)	Straight	538	47	12.5	13.5	14.5	806	77	14.5	16.0	17.0	1076	108	16.0	17.5	19.0
	22½°		35	10.5	11.5	12.0		58	12.0	12.5	14.0		81	13.0	14.0	15.0
	45°		24	8.5	9.0	9.5		39	9.5	10.0	10.5		54	10.0	10.5	11.0
24 x 6 (86.5)	Straight	648	48	13.0	14.0	15.5	972	79	15.0	16.5	17.5	1296	111	17.0	18.5	19.5
	22½°		36	10.5	11.5	12.5		59	12.0	13.0	14.5		83	13.5	14.5	15.5
	45°		24	8.5	9.5	9.5		40	9.5	10.0	10.5		56	10.0	10.5	11.5
30 x 6 (109.0)	Straight	812	50	13.0	14.5	15.5	1218	82	15.5	17.0	18.0	1624	115	17.5	19.0	20.5
	22½°		38	11.0	12.0	12.5		62	12.5	13.0	15.0		86	13.5	15.0	16.0
	45°		25	9.0	9.5	10.0		41	9.5	10.0	11.0		58	10.0	11.0	12.0
36 x 6 (131.3)	Straight	980	51	13.5	15.0	16.0	1470	84	16.0	17.5	19.0	1960	119	18.0	19.5	21.0
	22½°		38	11.0	12.0	13.0		63	13.0	13.5	15.0		89	14.0	15.0	16.5
	45°		26	9.0	9.5	10.0		42	10.0	10.5	11.0		60	10.5	11.0	12.0

K FACTOR			
Max Cfm/Sq Ft Outlet Wall Area	7.2	4.8	3.6
Min Cfm/Sq Ft Outlet Wall Area	2.2	1.4	1.1

NOTES:

1. **When employing ratings for flat ceilings, it is understood that the front louvres are set to deflect the air upward toward the ceiling.**
2. **Blow** indicates distance from outlet to the point where the air stream is substantially dissipated.
3. **Underblow.** It is not always necessary to blow the entire length of the room unless there are heat load sources at that end, equipment load, open doors, sun-glass, etc. Considering the concentration of room heat load on the basis of Btu/(hr) (sq ft), the outlet blow should cover 75% of the heat load.
4. **Divergent Blow** has vertical louvres straight forward in the center, with uniformly increasing angular deflection to a maximum at each end. The 45° divergence signifies an angular deflection at each end of the outlet of 45°, and similarly for 22½° divergence.
5. **Velocity** is based on effective face area.
6. **Static Pressure** is that pressure required to produce the indicated velocities and is measured in inches of water.
7. **Measure ceiling height in the CLEAR only.** This is the distance from the floor to the lowest ceiling beam or obstruction.
8. **The Minimum Ceiling Height** (table) is the minimum ceiling height which will give proper operation of the outlet for the given outlet velocity, vane setting, temperature difference, blow, and cfm. The actual measured ceiling height must be equal to or greater than the minimum ceiling height for the selection made. Preferably the top of an outlet should be not less than twice the outlet's height below the minimum ceiling height.
9. **Cfm/Sq Ft Outlet Wall Area** is the standard for judging total room air movement. The maximum value shown results in an air movement in the zone of occupancy of about 50 fpm. It is assumed that furniture, people, etc., obstruct 10% of the room cross-section. If the obstructions vary widely from 10%, the values of the cfm/sq ft outlet wall area should be tempered accordingly.
10. **For applications requiring a limiting sound level—the outlet velocity is limited by the sound generated by the outlet.**

TABLE 21—WALL OUTLET RATINGS, FOR COOLING ONLY (Cont.)

For Flat Ceilings

OUTLET VELOCITY		250 FPM					375 FPM					500 FPM					750 FPM				
STATIC PRESSURE STANDARD OUTLET		Str B = .01, 22½° = .01, 45° = .01					Str B = .013, 22½° = .015, 45° = .019					Str B = .024, 22½° = .028, 45° = .035					Str B = .051, 22½° = .061, 45° = .08				
STATIC PRESSURE WITH METERING PLATE		Str B = .01, 22½° = .015, 45° = .028					Str B = .024, 22½° = .043, 45° = .065					Str B = .061, 22½° = .082, 45° = .118					Str B = .175, 22½° = .19, 45° = .27				
Nom. Size of Outlet (and Free Area)	Vane Setting	Air Quantity (cfm)	Blow (ft)	Temp Diff (F) 15	20	25	Air Quantity (cfm)	Blow (ft)	Temp Diff (F) 15	20	25	Air Quantity (cfm)	Blow (ft)	Temp Diff (F) 15	20	25	Air Quantity (cfm)	Blow (ft)	Temp Diff (F) 15	20	25
				Min Clg Ht					Min Clg Ht					Min Clg Ht					Min Clg Ht		
12 x 8 (56.7)	Straight	113	7.4	8.5	9.0	9.5	170	14.0	9.5	10.0	10.5	226	20.0	10.0	11.0	12.0	339	36	12.0	13.5	14.0
	22½°		5.5	7.5	8.0	8.5		10.0	8.5	9.0	9.5		15.0	9.0	10.0	10.0		27	10.0	11.0	12.0
	45°		3.7	7.0	7.5	7.5		7.0	7.5	8.0	8.0		11.0	8.0	8.5	8.5		18	8.5	9.0	9.5
16 x 8 (77.1)	Straight	155	8.0	9.0	9.5	10.0	231	15.0	10.0	10.5	11.0	308	22.0	11.0	12.0	12.5	463	40	13.5	14.5	15.5
	22½°		6.0	8.0	8.5	9.0		11.0	9.0	9.5	10.0		16.0	9.5	10.5	11.0		30	11.0	12.0	12.5
	45°		4.0	7.5	7.5	8.0		7.5	7.5	8.5	8.5		11.5	8.0	9.0	9.0		20	9.0	9.5	10.0
20 x 8 (97.6)	Straight	192	8.5	9.5	10.0	10.5	287	16.0	10.5	11.0	12.0	385	24.0	11.5	12.5	13.5	575	43	14.0	15.5	16.5
	22½°		6.5	8.5	9.0	9.5		12.0	9.0	10.0	10.5		18.0	10.0	10.5	11.5		32	11.5	12.5	13.5
	45°		4.3	7.5	8.0	8.0		8.0	8.0	8.5	9.0		12.5	8.5	9.0	10.0		22	9.5	10.0	10.5
24 x 8 (118.0)	Straight	231	9.0	9.5	10.0	10.5	346	17.0	10.5	11.5	12.5	460	25.0	12.0	13.0	14.0	692	45	14.5	16.0	17.0
	22½°		6.9	8.5	9.0	9.5		13.0	9.5	10.0	10.5		19.0	10.5	11.0	12.0		34	12.0	13.0	14.0
	45°		4.5	7.5	8.0	8.5		8.5	8.0	8.5	9.0		13.0	9.0	9.0	10.0		23	9.5	10.0	10.5
30 x 8 (149.0)	Straight	289	9.5	10.0	10.5	11.0	435	18.0	11.0	12.0	13.0	580	26.0	12.5	13.5	15.0	868	46	15.5	17.0	18.0
	22½°		7.0	9.0	9.5	10.0		13.0	9.5	10.0	10.5		19.0	10.5	11.5	12.5		35	12.5	13.5	15.0
	45°		4.7	8.0	8.0	8.5		9.0	8.5	9.0	9.0		13.5	9.0	9.5	10.0		23	10.0	10.5	11.0
36 x 8 (179.0)	Straight	350	9.9	10.0	11.0	11.5	525	18.0	11.5	12.0	13.0	702	27.0	13.0	14.0	15.5	1048	48	16.0	18.0	19.0
	22½°		7.5	9.0	9.5	10.0		13.0	9.5	10.5	11.0		20.0	11.0	12.0	12.5		36	13.0	14.0	15.0
	45°		5.0	8.0	8.5	9.0		9.0	8.5	9.0	9.5		14.0	9.0	9.5	10.0		24	10.0	10.5	11.5
16 x 10 (97.7)	Straight	198	9.6	9.5	10.0	11.5	297	18.0	11.5	12.5	13.0	396	27.0	13.0	14.0	15.5	595	48	15.5	18.0	19.0
	22½°		7.1	9.0	9.5	10.0		13.0	10.0	10.5	11.0		20.0	11.0	12.0	12.5		36	13.0	14.5	15.0
	45°		5.0	8.0	8.5	9.0		9.0	8.5	9.0	9.5		14.5	9.0	9.5	10.0		24	10.0	10.5	11.5
20 x 10 (124.0)	Straight	249	10.5	10.5	11.0	12.0	374	19.0	12.0	13.0	14.0	497	29.0	13.5	15.0	16.0	746	51	17.0	18.5	20.0
	22½°		8.0	9.5	10.0	10.5		14.0	10.5	11.0	12.0		22.0	12.0	12.5	13.5		38	13.5	15.0	16.5
	45°		5.2	8.0	8.5	9.0		9.5	9.0	9.5	9.5		15.0	9.5	10.0	10.5		26	10.5	11.0	12.0
24 x 10 (150.0)	Straight	300	11.0	11.0	12.0	12.5	450	21.0	12.5	13.5	15.0	600	30.0	14.5	16.0	17.0	899	55	18.5	20.0	21.0
	22½°		8.4	10.0	10.5	11.0		16.0	11.0	11.5	12.5		22.0	12.0	13.0	14.0		41	14.5	15.5	17.0
	45°		5.5	9.0	9.0	9.5		10.5	9.0	9.5	10.0		15.5	10.0	10.5	11.0		28	11.0	12.0	12.5
30 x 10 (195.0)	Straight	364	12.0	12.0	12.5	13.5	564	22.0	13.5	14.5	16.0	751	32.0	15.0	17.0	18.5	1126	58	19.5	21.5	23.0
	22½°		9.0	10.5	11.0	12.0		16.0	11.5	12.0	13.0		24.0	13.0	14.0	15.0		44	15.5	17.0	18.5
	45°		6.0	9.5	9.0	9.5		11.0	9.5	10.0	10.5		16.5	10.0	10.5	11.5		29	11.5	12.5	13.5
36 x 10 (227.0)	Straight	453	12.4	12.0	13.0	14.0	680	22.0	14.0	15.0	16.0	904	33.0	15.0	17.5	19.0	1355	60	20.0	22.0	23.5
	22½°		9.1	10.5	11.5	12.0		16.0	12.0	12.5	13.5		25.0	13.0	14.0	15.5		45	16.0	17.5	19.0
	45°		6.1	9.5	9.0	9.5		11.0	9.5	10.0	10.5		17.0	11.0	11.0	12.0		30	12.0	12.5	13.5
16 x 12 (118.0)	Straight	244	11.0	11.0	12.0	12.5	367	21.0	12.5	13.5	15.0	488	31.0	14.5	16.0	17.0	733	55	18.5	20.0	21.0
	22½°		8.1	10.0	10.5	11.0		16.0	11.0	11.5	12.5		23.0	12.0	13.0	14.0		41	14.5	16.0	17.0
	45°		5.5	8.5	9.0	9.5		11.0	9.0	9.5	10.0		16.0	10.0	10.5	11.0		28	11.0	12.0	12.5
20 x 12 (150.0)	Straight	307	12.1	12.0	13.0	14.0	460	22.0	14.0	15.0	16.0	613	33.0	16.0	17.5	19.0	918	60	20.0	22.0	23.5
	22½°		9.1	10.5	11.0	12.0		16.0	12.0	12.5	13.5		25.0	13.0	14.0	15.5		45	16.0	17.5	19.0
	45°		6.0	9.0	9.0	9.5		11.0	9.5	10.0	10.5		17.0	11.0	11.0	12.0		30	12.0	12.5	13.5
24 x 12 (181.0)	Straight	370	13.0	12.5	13.5	14.7	555	24.0	14.5	16.0	18.0	740	35.0	17.0	18.5	20.0	1110	64	21.5	24.0	25.0
	22½°		10.0	11.0	12.0	12.5		18.0	12.0	13.0	14.0		26.0	14.0	15.0	16.0		48	17.0	18.5	20.0
	45°		6.5	9.0	9.5	10.0		12.0	10.0	10.0	11.0		18.0	11.0	11.0	12.5		32	12.0	13.5	14.5
30 x 12 (228.0)	Straight	462	13.9	13.5	14.5	15.5	695	25.0	15.5	17.0	18.0	925	37.0	18.0	20.0	21.5	1388	68	23.0	26.0	27.5
	22½°		10.0	11.5	12.5	13.0		19.0	13.0	14.0	15.0		28.0	14.5	16.0	17.0		51	18.0	20.0	21.5
	45°		7.0	9.5	10.0	10.5		12.0	10.0	10.5	11.0		19.0	11.0	12.0	13.0		34	13.0	14.0	15.0
36 x 12 (275.0)	Straight	560	14.5	14.0	15.5	16.5	836	27.0	16.0	18.0	19.0	1115	39.0	19.5	21.0	22.5	1673	71	24.5	27.5	29.0
	22½°		11.0	12.0	13.0	14.0		20.0	13.5	14.5	15.5		29.0	15.5	16.5	18.0		53	19.0	21.0	22.5
	45°		8.0	9.5	10.0	10.5		13.0	10.5	11.0	11.5		20.0	11.5	12.0	13.5		36	13.0	14.5	15.5

K FACTOR				
Max Cfm/Sq Ft Outlet Wall Area	29.0	19.0	14.0	9.6
Min Cfm/Sq Ft Outlet Wall Area	8.7	5.7	4.2	2.9

TABLE 21—WALL OUTLET RATINGS, FOR COOLING ONLY (Cont.)

For Flat Ceilings

OUTLET VELOCITY		1000 FPM				1500 FPM				2000 FPM			
STATIC PRESSURE STANDARD OUTLET		Str B = .093, 22½° = .11 45° = .14				Str B = .211, 22½° = .24 45° = .32				Str B = .375, 22½° = .42 45° = .565			
STATIC PRESSURE WITH METERING PLATE		Str B = .33, 22½° = .33 45° = .475				Str B = .715, 22½° = .74 45° = 1.15				Str B = 1.36			
Nom. Size of Outlet (and Free Area)	Vane Setting	Air Quantity (cfm)	Blow (ft)	Temp Diff (F) 15	20	25	Air Quantity (cfm)	Blow (ft)	Temp Diff (F) 15	20	25	Air Quantity (cfm)	Blow (ft)	Temp Diff (F) 15	20	25
				Min Clg Ht					Min Clg Ht					Min Clg Ht		
12 x 8 (56.7)	Straight	452	52	14.0	15.0	16.5	678	86	16.0	18.0	19.0	904	121	18.0	20.0	21.5
	22½°		39	11.5	12.5	13.5		65	13.0	14.0	15.5		91	14.0	15.5	17.0
	45°		26	9.0	10.0	10.0		43	10.0	10.5	11.5		62	10.5	11.5	12.0
16 x 8 (77.1)	Straight	616	57	15.0	16.5	18.0	926	95	18.0	19.5	21.0	1232	134	20.0	22.0	24.0
	22½°		43	12.5	13.5	14.5		71	14.0	14.0	17.0		100	15.5	17.0	18.5
	45°		29	9.5	10.0	11.0		48	10.5	11.5	12.0		67	11.0	12.0	13.0
20 x 8 (97.6)	Straight	770	62	16.0	18.0	19.5	1150	102	19.0	21.0	23.0	1540	144	21.0	23.5	26.0
	22½°		47	13.0	14.5	15.5		77	15.0	15.5	18.0		108	16.5	18.0	20.0
	45°		31	10.0	10.5	11.5		51	11.0	12.0	13.0		72	12.0	13.0	14.0
24 x 8 (118.0)	Straight	920	65	17.0	19.0	20.0	1384	107	20.0	22.5	24.5	1840	151	22.0	25.0	27.5
	22½°		49	13.5	15.0	16.0		80	15.5	16.5	18.5		113	17.5	19.0	20.5
	45°		33	10.5	11.0	12.0		54	11.5	12.5	13.0		76	12.0	13.5	14.5
30 x 8 (149.0)	Straight	1160	68	17.5	19.5	21.0	1736	111	21.0	23.5	25.5	2320	157	23.5	26.0	29.5
	22½°		51	14.0	15.5	17.0		83	16.5	17.5	19.5		118	18.0	20.0	21.5
	45°		34	10.5	11.5	12.5		56	11.5	13.0	13.5		79	13.0	14.0	15.0
36 x 8 (179.0)	Straight	1404	71	18.5	20.5	22.0	2096	116	21.5	25.0	26.5	2808	164	24.5	27.5	31.0
	22½°		53	14.5	16.0	17.5		87	17.0	18.0	20.0		123	19.0	21.0	22.5
	45°		36	11.0	12.0	12.5		58	12.0	13.0	14.0		82	13.0	14.5	15.5
16 x 10 (97.7)	Straight	792	71	18.0	20.5	22.0	1190	116	21.0	25.0	26.5	1584	164	24.0	27.5	31.0
	22½°		53	14.5	16.0	17.5		87	17.0	19.0	20.0		123	19.0	21.0	22.5
	45°		36	11.0	12.0	12.5		58	12.0	13.0	14.0		82	13.0	14.5	15.5
20 x 10 (124.0)	Straight	994	75	19.5	22.0	24.0	1492	122	23.0	26.5	29.0	1988	174	26.0	29.5	34.0
	22½°		56	15.5	17.0	18.5		92	18.0	19.0	21.5		130	20.0	22.5	24.0
	45°		38	11.5	12.5	13.5		61	13.0	14.0	15.0		87	14.0	15.5	16.5
24 x 10 (150.0)	Straight	1200	80	21.0	24.0	25.5	1798	131	24.5	28.5	31.0	2400	185	28.0	32.0	36.5
	22½°		60	16.5	18.5	19.5		98	19.0	20.0	22.5		139	21.5	24.0	25.5
	45°		40	12.0	13.0	14.0		66	13.5	14.5	15.5		93	14.5	16.5	17.0
30 x 10 (195.0)	Straight	1502	86	22.5	25.5	27.5	2252	139	26.5	30.5	34.0	3004	196	30.5	34.0	39.5
	22½°		65	18.0	19.5	21.0		104	20.5	21.5	24.5		147	23.0	26.0	28.0
	45°		43	12.5	14.0	15.0		70	14.0	15.5	16.5		98	15.5	17.0	18.5
36 x 10 (227.0)	Straight	1808	87	23.5	26.5	28.5	2710	142	27.0	31.5	35.0	3616	200	31.5	36.0	40.5
	22½°		65	18.5	20.0	21.5		106	21.0	23.0	25.0		150	23.5	27.0	29.0
	45°		44	13.0	14.5	15.0		71	14.5	16.0	17.0		100	15.5	17.5	19.0
16 x 12 (118.0)	Straight	976	81	21.0	24.0	25.5	1466	131	24.5	28.0	31.0	1952	158	28.0	32.0	36.5
	22½°		61	16.5	18.5	19.5		98	19.0	21.5	22.5		138	21.5	24.0	25.5
	45°		41	12.0	13.0	14.0		66	13.5	14.5	15.5		93	14.5	16.5	17.0
20 x 12 (150.0)	Straight	1226	87	23.5	26.5	28.5	1836	142	27.0	31.5	35.0	2452	200	31.5	36.0	40.5
	22½°		65	18.5	20.0	21.5		106	21.0	23.5	25.0		150	23.5	27.0	29.0
	45°		44	13.0	14.5	15.0		71	14.5	16.0	17.0		100	15.5	17.5	19.0
24 x 12 (181.0)	Straight	1480	93	25.0	28.5	31.0	2220	153	29.0	34.0	37.5	2960	213	34.5	38.5	42.5
	22½°		70	19.5	21.5	23.0		115	22.0	25.0	26.5		160	25.0	29.0	31.0
	45°		47	13.5	15.0	16.0		77	15.0	17.0	18.0		107	16.5	18.5	20.0
30 x 12 (228.0)	Straight	1850	98	27.0	31.0	34.0	2776	163	31.5	36.5	40.5	3700	226	38.0	43.0	47.0
	22½°		74	21.0	23.0	25.0		122	24.0	27.0	28.5		169	27.0	31.0	33.5
	45°		49	14.5	16.0	17.0		82	16.0	18.0	19.0		113	17.5	19.5	21.0
36 x 12 (275.0)	Straight	2230	103	29.0	33.0	36.0	3346	172	33.5	38.0	42.5	4460	238	40.0	45.0	50.0
	22½°		77	22.0	24.5	26.5		129	25.0	28.0	30.0		178	28.5	32.5	35.5
	45°		52	15.0	16.0	17.5		86	16.5	18.5	20.0		119	18.0	20.5	22.0

K FACTOR			
Max Cfm/Sq Ft Outlet Wall Area	7.2	4.8	3.6
Min Cfm/Sq Ft Outlet Wall Area	2.2	1.4	1.1

NOTES:

1. **When employing ratings for flat ceilings, it is understood that the front louvres are set to deflect the air upward toward the ceiling.**
2. **Blow** indicates distance from outlet to the point where the air stream is substantially dissipated.
3. **Underblow.** It is not always necessary to blow the entire length of the room unless there are heat load sources at that end, equipment load, open doors, sun-glass, etc. Considering the concentration of room heat load on the basis of Btu/(hr) (sq ft), the outlet blow should cover 75% of the heat load.
4. **Divergent Blow** has vertical louvres straight forward in the center, with uniformly increasing angular deflection to a maximum at each end. The 45° divergence signifies an angular deflection at each end of the outlet of 45°, and similarly for 22½° divergence.
5. **Velocity** is based on effective face area.
6. **Static Pressure** is that pressure required to produce the indicated velocities and is measured in inches of water.
7. **Measure ceiling height in the CLEAR only.** This is the distance from the floor to the lowest ceiling beam or obstruction.
8. **The Minimum Ceiling Height** (table) is the minimum ceiling height which will give proper operation of the outlet for the given outlet velocity, vane setting, temperature difference, blow, and cfm. The actual measured ceiling height must be equal to or greater than the minimum ceiling height for the selection made. Preferably the top of an outlet should be not less than twice the outlet's height below the minimum ceiling height.
9. **Cfm/Sq Ft Outlet Wall Area** is the standard for judging total room air movement. The maximum value shown results in an air movement in the zone of occupancy of about 50 fpm. It is assumed that furniture, people, etc., obstruct 10% of the room cross-section. If the obstructions vary widely from 10%, the values of the cfm/sq ft outlet wall area should be tempered accordingly.
10. **For applications requiring a limiting sound level**—the outlet velocity is limited by the sound generated by the outlet.

APPENDIX B: Performance of Slot Diffusers, Sidewall Application, with Ceiling Effect

Nominal Width	Cfm/Ft.	20	30	40	50	60	80	100	125	150	200	250	300
1-1/2"	Vel.	320	480	640	800	960	1280	1600					
	Throw	6.5	13	18	25	29	38	45					
2"	Vel.	190	290	385	480	575	770	960	1200	1440			
	Throw	5.2	9	14	19.5	23.5	31	39	47	52			
2-1/2"	Vel.		205	275	345	410	550	685	855	1030	1370		
	Throw		7.8	12	16	19.5	26	32	39	47	58		
3"	Vel.			215	265	320	425	535	665	800	1070	1330	
	Throw			10	14	18	23	29	35	40	51	61	
3-1/2"	Vel.				220	260	350	435	545	655	875	1090	1310
	Throw				14	17	23	27	32	38	48	57	66
4"	Vel.					220	295	370	460	555	740	920	1110
	Throw					16	19.5	25	30	34	43	52	58
Drop		1.8	2.4	3.0	3.3	3.6	3.9	4.2	4.8	5.1	5.7	6.3	6.6

Note: Throw and drop values are for 5 foot length, and are based on a temperature difference of 20°F.

APPENDIX C: Performance of Slot Diffusers, Perimeter Floor or Window Sill Application

Nominal Width	Cfm/Ft.	20	30	40	50	60	80	100	125	150	200	250	300
1-1/2"	Vel.	320	480	640	800	960	1280	1600					
	Throw, 20° TD	2	6	11	17	22	28	32					
	Throw, 0° TD	16	20	24	28	32	38	43					
2"	Vel.		290	385	480	575	770	960	1200	1440			
	Throw, 20° TD		3	6	10	14	22	28	32	36			
	Throw, 0° TD		18	22	25	28	33	38	44	49			
2-1/2"	Vel.			275	345	410	550	685	855	1030	1370		
	Throw, 20° TD			3	5	8	15	21	28	33	40		
	Throw, 0° TD			20	23	26	31	36	41	46	55		
3"	Vel.				265	320	425	535	665	800	1070	1330	
	Throw, 20° TD				3	5	10	16	23	29	37	42	
	Throw, 0° TD				21	24	28	32	37	42	50	58	
3-1/2"	Vel.					260	350	435	545	655	875	1090	1310
	Throw, 20° TD					4	8	13	19	25	34	40	45
	Throw, 0° TD					23	28	32	36	40	48	55	62
4"	Vel.					220	295	370	460	555	740	920	1110
	Throw, 20° TD					3	6	10	16	21	31	38	43
	Throw 0° TD					22	26	30	34	38	46	53	59

Note: Throw Values are for 10' Active Lengths.

Model RS-2 Ceiling Diffuser

NECK SIZE (IN.)	NECK AREA (Sq. Ft.)	NECK VELOCITY (fpm)	300	400	500	600	700	800	900	1000	1100	1200	1400	1600
		VELOCITY PRESSURE (INCHES W.G.)	.006	.010	.016	.023	.031	.040	.051	.063	.075	.090	.122	.160
6″	196	CFM	60	80	100	120	135	155	175	195	215	235	275	315
		TOTAL PRESSURE	.020	.036	.056	.080	.101	.132	.168	.209	.251	.306	.415	.543
		THROW (ft.)	1-2-2	2-2-3	2-3-4	2-3-4	3-4-5	3-4-5	3-5-5	4-5-6	4-5-6	4-5-6	5-6-7	5-6-7
8″	349	CFM	105	140	175	210	245	280	315	350	385	420	490	560
		TOTAL PRESSURE	.015	.026	.041	.059	.080	.103	.131	.162	.192	.231	.313	.410
		THROW (ft.)	1-2-3	2-3-4	2-4-5	3-4-6	3-5-6	4-5-7	4-6-7	5-7-7	5-7-8	6-7-8	6-8-9	7-8-10
10″	.545	CFM	165	220	275	325	380	435	490	545	600	655	765	870
		TOTAL PRESSURE	.019	.032	.051	.073	.098	.127	.162	.197	.238	.286	.387	.508
		THROW (ft.)	2-3-4	3-4-6	3-5-7	4-6-7	5-7-8	5-7-9	6-8-9	7-8-9	7-8-10	7-9-10	8-10-11	8-10-12
12″	.785	CFM	235	315	395	470	550	630	705	785	865	940	1100	1255
		TOTAL PRESSURE	.014	.023	.037	.053	.071	.092	.117	.145	.173	.207	.280	.368
		THROW (ft.)	2-3-4	3-4-6	4-6-8	5-7-9	5-8-10	6-9-10	7-9-10	8-10-11	8-10-12	9-11-12	10-12-13	10-12-14
14″	1.07	CFM	320	430	535	640	750	855	965	1070	1175	1285	1500	1710
		TOTAL PRESSURE	.014	.023	.037	.053	.071	.092	.117	.145	.173	.207	.280	.368
		THROW (ft.)	3-4-5	4-5-7	4-7-9	5-7-11	6-9-11	7-10-12	8-11-12	8-11-13	10-12-14	10-13-14	11-14-16	12-14-17
16″	1.40	CFM	420	560	700	840	980	1120	1260	1400	1540	1680	1960	2240
		TOTAL PRESSURE	.014	.023	.037	.053	.072	.093	.118	.146	.174	.208	.283	.371
		THROW (ft.)	3-5-6	4-6-8	5-8-11	6-10-12	8-11-13	8-12-14	9-13-14	10-13-15	11-14-16	12-14-17	13-16-18	14-17-19
18″	1.77	CFM	530	710	885	1060	1240	1415	1595	1770	1945	2125	2480	2830
		TOTAL PRESSURE	.012	.020	.032	.046	.062	.080	.102	.126	.150	.180	.244	.320
		THROW (ft.)	3-5-7	5-7-9	6-8-11	7-10-13	8-12-14	9-13-15	10-14-16	11-15-17	12-16-18	13-16-19	14-18-20	15-19-22
20″	2.18	CFM	655	870	1090	1310	1525	1745	1960	2180	2400	2615	3050	3490
		TOTAL PRESSURE	.011	.019	.030	.043	.059	.076	.096	.119	.142	.170	.231	.302
		THROW (ft.)	4-6-7	5-7-10	6-9-12	7-11-14	8-13-16	10-14-17	11-16-18	12-16-19	13-17-20	14-18-20	16-19-22	17-21-24
24″	3.14	CFM	940	1255	1570	1885	2200	2510	2825	3140	3455	3770	4395	5025
		TOTAL PRESSURE	.011	.018	.029	.041	.056	.072	.092	.113	.135	.162	.220	.288
		THROW (ft.)	5-7-9	6-9-12	8-11-15	9-14-18	11-16-19	12-18-20	14-19-22	15-20-23	17-21-24	18-22-25	19-23-27	20-25-29
30″	4.90	CFM	1470	1960	2450	2940	3430	3920	4410	4900	5390	5880	6860	7840
		TOTAL PRESSURE	.010	.016	.026	.037	.050	.064	.082	.101	.120	.144	.195	.256
		THROW (ft.)	6-9-11	8-11-15	10-14-19	11-17-22	13-20-24	15-22-25	17-23-27	19-24-28	21-26-30	22-27-31	24-29-33	25-31-36
36″	7.06	CFM	2120	2825	3530	4235	4940	5650	6355	7060	7765	8470	9885	11295
		TOTAL PRESSURE	.009	.015	.024	.034	.046	.060	.076	.094	.112	.135	.183	.240
		THROW (ft.)	7-11-14	9-14-18	11-19-23	14-20-26	16-24-28	18-26-30	20-28-32	23-29-34	25-31-36	26-32-37	28-35-40	30-37-43
			See Note 1		See Note 2		See Note 3		See Note 4	See Note 5			See Note 6	

NOTES:
1. NC Level less than 20.
2. NC Level less than 30.
3. NC Level less than 35.
4. NC Level less than 40.
5. NC Level less than 50.
6. NC Level more than 50.

Data based on 18 db Room Attenuation.

For recommended ranges of NC sound data for various applications, refer to Section 1, Page 1-18 or the ASHRAE Guide.

Throw data shown in the chart is based on terminal velocities of 150 fpm, 100 fpm and 75 fpm respectively using isothermal air and horizontal air pattern.

For definition of terms used in the above table, refer to preceding page.

Work Session

The load estimate and site survey for a drug store in Pasadena, California gives the following information:

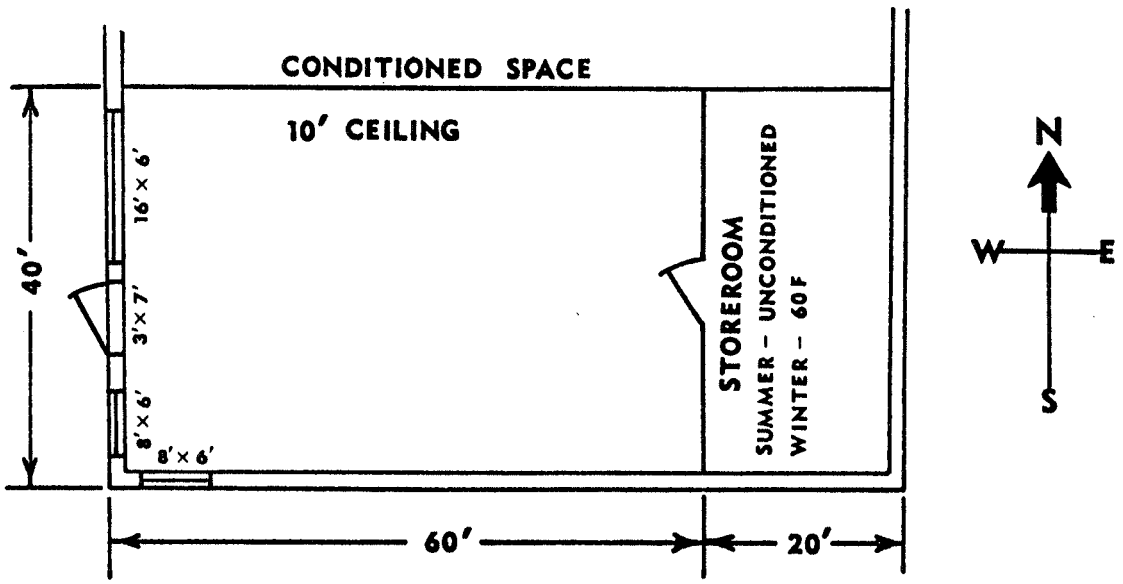

Required Supply Air Quantity = 4760 cfm

Room Temperature = 75F

Supply Air Temperature = 55F

Select and locate room air distribution outlet(s).

Size and locate return air grille(s).

NOTES

NOTES