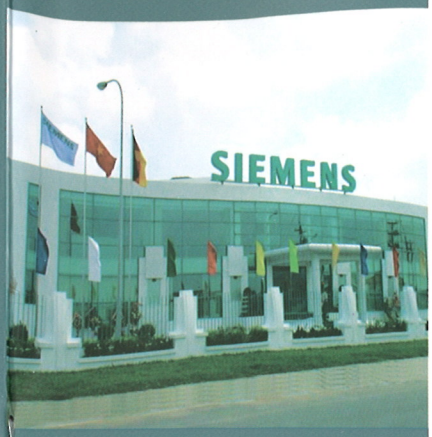

For Safe Power Flows

SIVACON 8PS Busbar Trunking Systems LXA/LXC over 800A

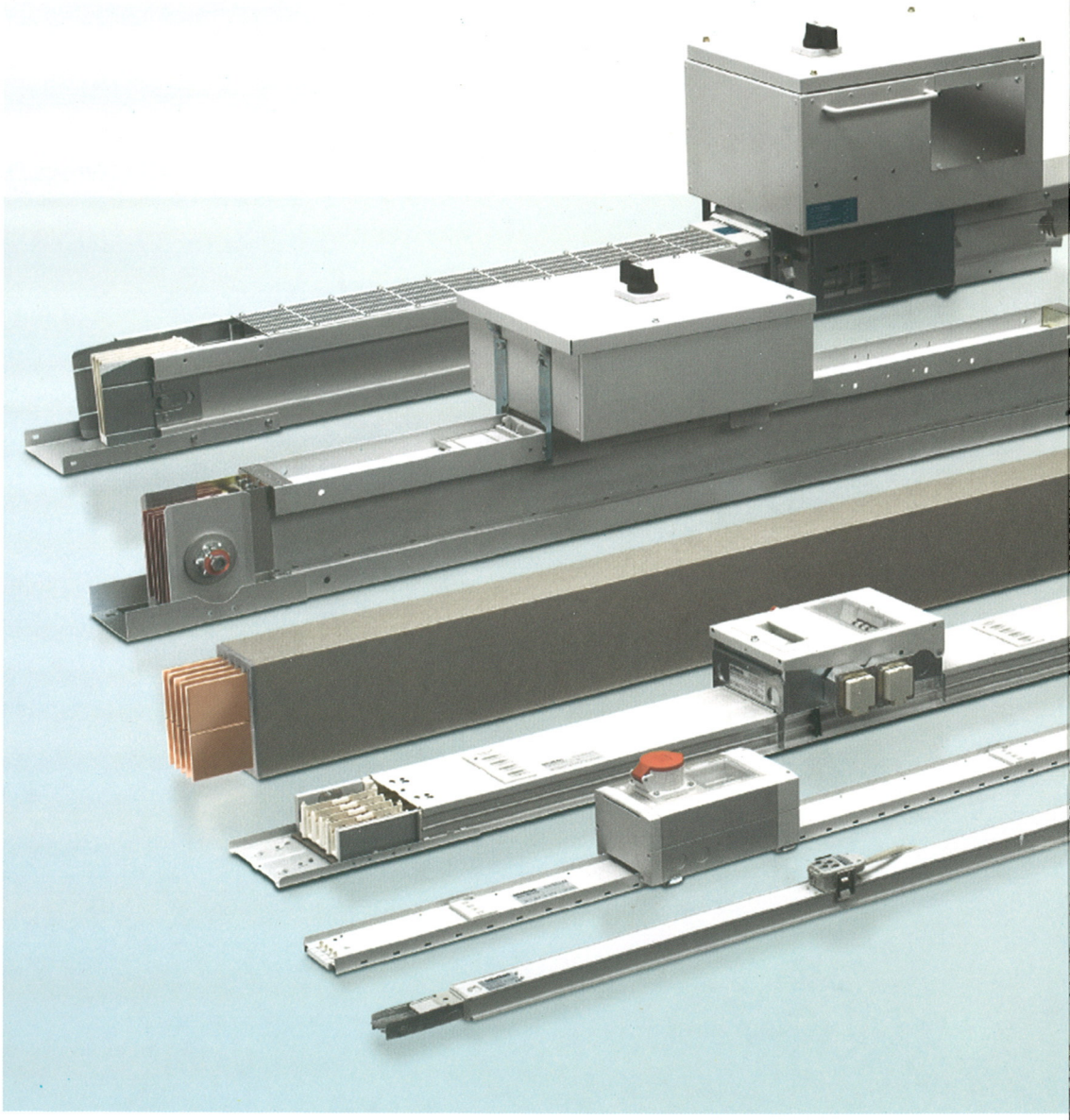

SIVACON

Answers for industry.

SIEMENS

SIVACON 8PS Busbar Trunking Systems LXA/LXC over 800 A

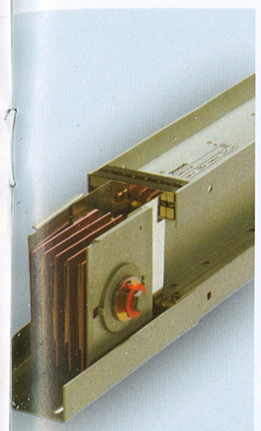

Introduction

SIVACON 8PS Busbar Trunking Systems in Action 1

System Overview

2/1 Basics of planning busbar trunking systems

2/2 System description

2/3 System selection criteria 2

LXA/LXC Busbar Trunking System

3/1 System components

3/10 Technical Data

3/25 Dimension drawings 3

Further Information

4/1 Busbar trunking systems with fire barriers

4/3 Aids for planning trunking layout 4

SIVACON 8PS -
Busbar Trunking Systems in Action

Busbar trunking systems in the low-voltge range perform the safe and reliable transmission and distribution of electrical power from transformer via main distribution board and sub-distribution board right to the load. Siemens busbar trunking systems are the complete and efficient answer in this area:

- The CD system for 25 A to 40 A
- The BD01 system for 40 A to 160 A
- The BD2 system for 160 A to 1250 A
- The LR system for 800 A to 6000 A
- The LD system for 1100 A to 5000 A
- The LX system for 800 A to 6300 A

All these systems are 'Type-tested LV switchgear assemblies' (TTA) to IEC 60439-1 and -2. This ensures that they offer a standard of safety and reliability that meets the particularly high performance expectations of automated production and for building services provision.

Performance characteristics:

- Clear network structure
- Unproblematic retrofitting in the event of load changes
- Low operating costs due to uninterrupted serviceability
- Simple planning and installation

Room-covering systems for lighting installations and small loads

The CD system (up to 40 A) allows you to supply lighting installations covering the whole expanse of, say, furniture showrooms, supermarkets or greenhouses with power, and also provides the means to easily fix them in position.
Due to its pleasing appearance, the equipment is well suited for use in sales rooms visited by the public. On the other hand, its high degree of protection, to IP54, allows the CD system to be used even in harsh environments.

The power source for loads with no fixed location

The BD01 system is ideally suited for the power supply (up to 160 A) in workshops and trade premises. The trunking units are easily and quickly to put together. The anti-rotation feature on the tap-off units makes sure that the units are correctly fitted and allows for easy retrofitting even while the production is running.
Other benefits: minimum stock holding and uncomplicated planning due to one standard frame size for five different current ratings.



The BD 01 system is quickly to install and ideally suited for use in workshops and trade premises, as here, at a photographer's.



The ideal system for production lines needing a great deal of power is the LD system up to 5000 A.



In the petrochemical industry, it is the LR system that provides reliable and fault-free power supply.

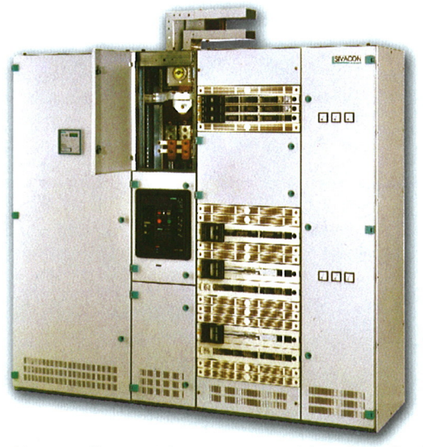

Siemens offers modular component cabinets for indication, control and monitoring of the flow of power through busbar trunking systems. These cabinets are equipped with bus interfaces, control circuit devices and power meters.



The LX busbar trunking system is the perfect equipment for multi-storey buildings where large quantities of power need to be transported, uninfluenced by the mounting position of the system.

Universal power distribution

The BD2 system (up to 1250 A) can supply power to medium-size loads in buildings and in all industrial applications. Prefabricated tap-off units fitted with many differing component combinations make this equipment universally applicable. Two standard frame sizes covering all current ratings simplify stock keeping and planning.

Safe and reliable power transmission in the petrochemical industry

The LR resin-insulated system, up to 6000 A, has a high degree of insulation protection and thus an enormous resistance to external interference factors. This ensures safe and reliable transport of power even in rough weather or in highly dust and dirt and corrosion polluted industrial environments. Typical applications of this system is the petrochemical industry, waste incinerators and power stations.

High system serviceability in production

The louvred LD busbar trunking system, up to 5000 A, is the system for transporting current in production lines with a large energy requirement, such as in the automotive industry. A separate PE busbar ensures that the protective device in such a system responds reliably even if the current paths are relatively long. The high short-circuit rating allows medium-voltage switches to be used as protective elements for the transmission of power between transformer and main circuit-breaker. Tap-off units up to 1250 A available as standard.

Flexible power distribution in multi-storey buildings

The LX sandwich-style system, up to 6300 A, is used where large quantities of power need to be transported, uninfluenced by the mounting position of the system.
Conductor configurations with the PE conductor insulated along its entire length, and a double-size neutral can ensure the interference-free distribution of power in places such as radio stations, computer centres or at internet providers'. The system is protected to IP54 as standard, and tap-off units up to 1250 A are available as standard.

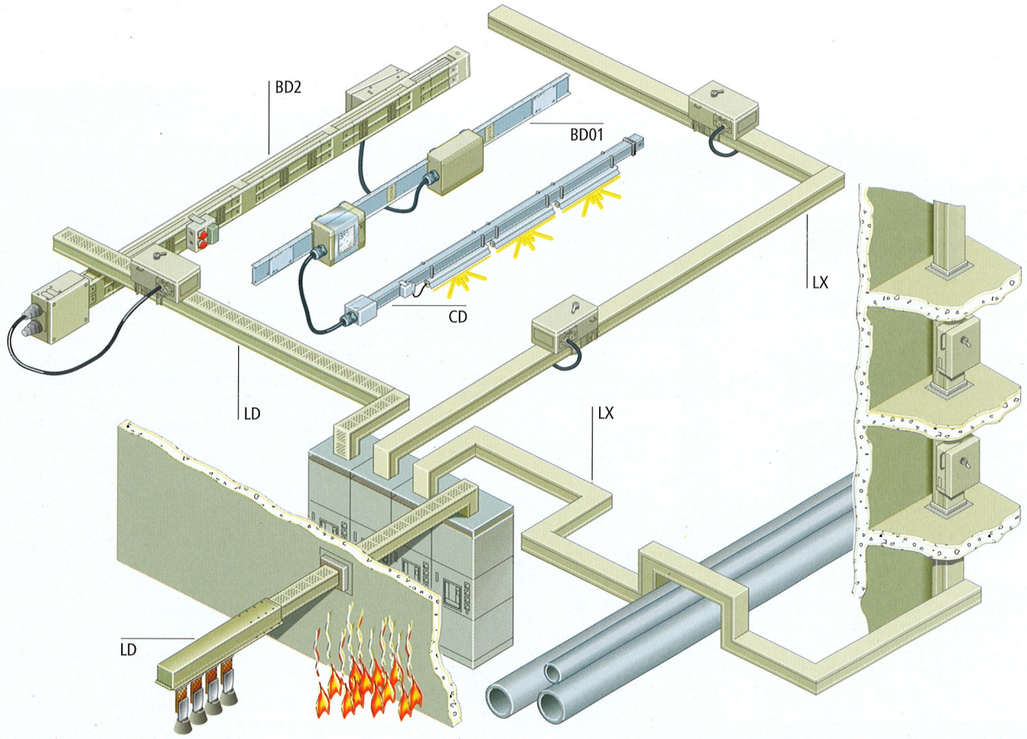

Figure 1: Busbar trunking systems

Purpose and types of busbar trunking systems

The complexity of today's buildings makes power distribution with a high level of transparency and flexibility an indispensable requirement. The uninterrupted provision of power is also absolutely essential for production plants with multiple shifts.

Busbar trunking systems meet these demands for an economical power distribution system with simple design,fast installation, optimum flexibility and safety by offering:

- Straightforward network structures
- Minimum space requirements
- Easy retrofitting with sudden changes in location and consumer ratings
- High short-circuit rating and low fire load

The LX busbar trunking system is a type-tested low-voltage assembly (TTA) in accordance with IEC/EN 60 439-1 and 2 in the form of an aluminium enclosed sandwich system.The LX sandwich system consists of busbars, insulation, the aluminium enclosure and the fastening and connection elements.

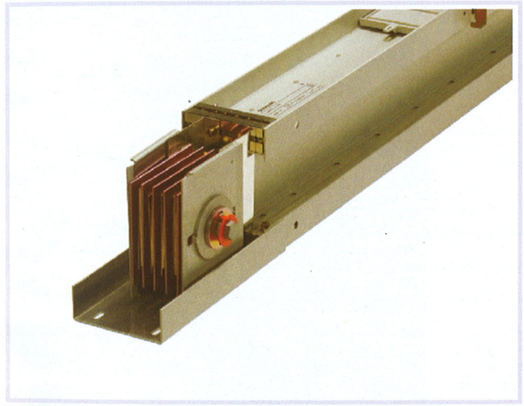

Figure 2: LX trunking unit with joint block

Purpose and types of busbar trunking systems

Various busbar trunking system components are responsible for transporting power between transformers and low-voltage power distribution systems. They are used between the transformer and main distribution board and then on to the subdistribution level.

Trunking units without tap-off points, available in standard lengths, are used for transporting power. In addition to the standard lengths, customers can select lengths from several ranges to meet their particular building requirements.

Power distribution

The main application of busbar trunking systems is power distribution. The advantage of such systems over cable installations is that the locations of power tap-off points are not permanent, – but can be moved to any position within the entire system. To tap power at any given point simply requires positioning a tap-off unit at that location on the busbar.

The result is a flexible distribution system for decentralized power supply to a particular line or area. Tap-off points can be mounted on one or both sides of straight trunking units.

The LX busbar trunking system provides tap-off units from 80 A to 1250 A for power tap-offs and for connecting consumers, providing the power supply for consumers in the range between 10 kW and over 400 kW. Tap-off units can be fitted with either fuse switches or circuit-breakers.

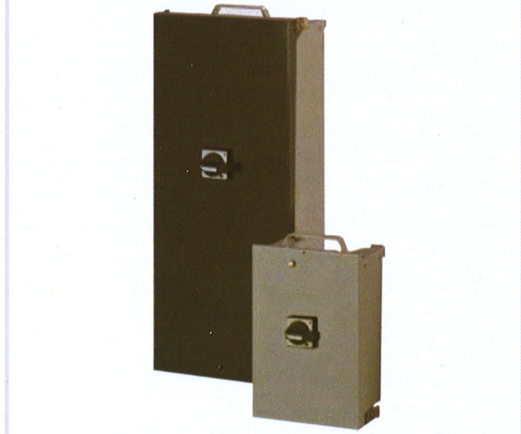

Figure 3: Tap-off units for flexible power tapping

With all busbar trunking systems, pluggable tap-off units have a high safty standard, the following requirements will be full filed by all tap-off units:

- Early-make PE contact for mounting and late-break contact for removing
- With the cover open, no live part can be accessed (protection IP2X).
- Mounting should only be possible in the correct phase sequence.

The plug-in LX tap-off units up to 630 A meet these requirements.

The LX tap-off units from 800 A to 1250 A are fitted permanently to the connection points of the trunking units and cannot be fitted/ removed while the system is live. Installation is only permissible when the system is isolated.

Selection of LXA/LXC

		LXA/LXC
Rated operational voltage U_e	VAC	690
Standard degree of protection		IP54/55
Rated current I_e	A	800 – 6300
Permissible load (I_e) depending on		
Mounting position		
Horizontal edgewise	%	100
Horizontal, flat	%	100
Vertical	%	100
IP54/55 protection	%	100
Rated short-time with stand current I_{cw} (1 s)	KA	25 – 150
Conductor configurations		
L1, L2, L3, PE = Enclosure		●
L1, L2, L3, 1/2 PEN		–
L1, L2, L3, PEN		●
L1, L2, L3, N, PE = Enclosure		●
L1, L2, L3, ½ N, PE = Enclosure		–
L1, L2, L3, N, PE		●
L1, L2, L3, 2 N, PE = Enclosure		●
L1, L2, L3, 2 N, PE		●
L1, L2, L3, N, (PE)[2], PE = Enclosure		●
L1, L2, L3, 2 N, (PE)[2], PE = Enclosure		●
Dimensions width x height		
Al systems/1000 A and Cu systems/1250 A	mm x mm	145 x 137
Al systems/1250 A and Cu systems/1600 A	mm x mm	145 x 162
Al systems/1600 A and Cu systems/2000 A	mm x mm	145 x 207
Al systems/2500 A and Cu systems/3200 A	mm x mm	145 x 287
Al systems/3200 A and Cu systems/4000 A	mm x mm	145 x 439
Al systems/4000 A and Cu systems/5000 A	mm x mm	145 x 599
Fire load		
Tap-off unit without tap-off point	kWh/m	1.83 – 16.32
Per tap-off point	kWh/m	2.9

1) Taking current reduction into account also available with IP54/55 protection
2) (PE) = Additional insulated PE conductor (clean earth)
3) Voltage drop in millivolts per 1 m per ampere, 3-phase 50Hz, cos φ = 0.9, with a fully symmetrical load, concentrated load tap-off and supply from one end
4) Magnetic field values given in microtesla with a fully symmetrical load at a distance of 0.5 m from the busbar system

		LXA/LXC
Voltage drop[3]		
Al systems/1250 A	mV/A/m	0.127
Al systems/2500 A	mV/A/m	0.051
Al systems/4000 A	mV/A/m	0.03
Cu systems/2000 A	mV/A/m	0.064
Cu systems/5000 A	mV/A/m	0.02
Magnetic fields[4]		
Al systems/1600 A	µT	10.84
Al systems/2500 A	µT	20.54
Al systems/4000 A	µT	30.62
Cu systems/2000 A	µT	11.66
Cu systems/5000 A	µT	37.22
Max. Fixing intervals		
Al systems	m	2–3
Cu systems	m	2–3
Tap-off units can be changed when system is live	A	80–630
Maximum number of tap-offs with pluggable tap-off units over 3 m length when using tap-off units		
From 80 to 125	A	6
From 160 to 630	A	4
From 800 to 1250	A	Bolt – on type
Tap-off units with fuses	A	100–630
Rated conditional short-circuit current I_{cf}	kA	100(80)
IEC standard		●
BS standard		●
NF standard		●
Tap-off units with circuit-breaker	A	50–1250 A
Rated conditional short-circuit current I_{cu}	kA	70 at 400 V
Manual operation		●
Remote operation		–

2

Conductor configurations

IEC 364 stipulates that electrical equipment must be selected according to the type of system at hand in order to determine the protective measures required. For the LX system this selection is based on the appropriate conductor configuration.

System type	Conductor configuration
TN-C	LX...41
TN-C-S	1)
TN-S	LX...51 LX...52 LX...53 LX...54 LX...61 LX...62
TT	LX...51 LX...52 LX...53 LX...54
IT	LX...30

1) An appropriate conductor configuration is not available as an LX system. However, the PEN conductor can be divided into an N and PE conductor in the tap-off unit when using an LX..41 4-conductor system.

N and PE conductor cross-sections/clean earth

Neutral conductor cross-section

The rise in new electronic consumers that are sensitive to interference, particularly near the power supply in the building, is presenting busbar trunking systems with new challenges. Interference from electromagnetic fields and harmonics in the mains supply impair the correct functioning of computers, servers and many other state-of-the-art electronic devices. Particularly, the large number of AC consumers in a mains supply place a high load on the neutral conductor on account of the resulting harmonics. Double neutral conductor cross-sections (200%) reduce the susceptibility of the system in networks subject to harmonics.

PE conductor cross-section

A large PE conductor cross-section also provides optimum safety for the power supply since the reduced loop impedance ensures rapid interruption of short-circuit currents. This consequently reduces the risk of possible downtimes thanks to the rapid disconnection of upstream protective devices.

Clean earth

Insulated PE conductors offer optimum reliability and safety in the power supply of electronic consumers in buildings on account of their complete insulation from the busbar enclosure. In the event of a short-circuit between the phase and the consumer enclosure this PE conductor (clean earth) is not affected by this fault and is therefore potential-free during a short-circuit to an exposed conductive part. Even leakage currents in the enclosure due to magnetic fields do not affect the clean earth. The clean earth is therefore ideal as the PE connection for susceptible electronic loads.

Cross-sections for PEN, N, PE conductors compared to the conductor cross-section

The following tables compare the conductor cross-sections L1, L2, L3, PEN, N, PE and clean earth of different conductor configurations. The appropriate values in mm^2) are contained in the Technical Data

System	Cross-sections				
	L1, L2, L3	PEN	N	PE	Clean earth
LX..30	100 %	–	–	Enclosure	–
LX..41	100 %	100 %+Enclosure	–	–	–
LX..51	100 %	–	100 %	Enclosure	–
LX..52	100 %	–	200 %	Enclosure	–
LX.53[1)]	100 %	–	100 %	100 % + Enclosure	–
LX.54[1)]	100 %	–	200 %	100 % + Enclosure	–
LX..61	100 %	–	100 %	Enclosure	100 %
LX..62	100 %	–	200 %	Enclosure	200 %

1) Each conductor configuration contains an additional busbar as PE conductor. The PE conductor is electrically connected to the enclosure.

2

Enclosure cross-section compared to conductor cross-section (Cu equivalent)

System	Enclosure cross-section
LXA(C)01..	324 %
LXA(C)02..	245 %
LXC03..	230 %
LX(C)A04..	173 %
LXA(C)05..	119 %
LXA(C)06..	113 %
LXA(C)07..	84 %
LXA(C)08..	119 %
LXA(C)09..	113 %
LXA10..	84 %

Example:

What are the cross-sections of systems for:

a) LXA0461
L1, L2, L3, N, clean earth: 100%
PE (enclosure): 173 % in Cu equivalent

b) LXC0554
L1, L2, L3: 100 %
N: 200 %
PE (enclosure + busbar): 219% in Cu equivalent

Rated currents and short-circuit currents of standard transformers

Rated voltage U_N	400/230 V			690/400 V		
Relative short-circuit voltage U_k		4 %[1)]	6 %[2)]		4 %[1)]	6 %[2)]
Rated power	Rated current	Short-circuit current[3)] I''_k		Rated current	Short-circuit current[3)] I''_k	
kVA	A	A		A	A	
50	72	1805	–	42	1042	–
100	144	3610	2406	84	2084	1392
160	230	5776	3850	133	3325	2230
200	288	7220	4812	168	4168	2784
250	360	9025	6015	210	5220	3560
315	455	11375	7583	263	6650	4380
400	578	14450	9630	336	8336	5568
500	722	18050	12030	420	10440	7120
630	909	22750	15166	526	13300	8760
800	1156	28900	19260	672	16672	11136
1000	1444	36100	24060	840	20840	13920
1250	1805	45125	30080	1050	26060	17480
1600	2312	57800	38530	1330	33300	22300
2000	2888	72200	48120	1680	41680	27840
2500	3612	90300	60200	2094	52350	34900
3150	4546	113650	75780	2636	65893	43933

1) u_k = 4 %, standardized to DIN 42500 for S_{NT} = 50 – 630 kVA
2) u_k = 6 %, standardized to DIN 42500 for S_{NT} = 100 – 1600 kVA
3) I''_k = Initial symmetrical short-circuit current of transformer when connected to a system with unlimited short-circuit capacity

Approximation formula		
Rated current of transformer	Short-circuit current of transformer	
I_N [A] = k X S_{NT} [kVA]	$I''_k = I_N/u_k$ X 100	400 V:k = 1.45 690 V:k = 0.84

System Overview

System selection criteria

LXA/LXC selection depending on transformer rated values

Transformer rated values				LX system			
Rated current	Rel. short-circuit voltage	Uninterrupted short-circuit current	Peak short-circuit current	Type	Rated current	Rated short-time withstand current	Rated impulse withstand current
I	u_k	I''_k	I_{pk}		I_e	I_{cw}	I_{pk}
A	%	kA_{eff}	kA		A	kA_{eff}	kA
910	6	15.15	38.58	LXA02 LXC01	1000 1000	35 38	70 80
1155	6	19.25	49.00	LXA04 LXC02	1250 1250	50 50	110 110
1444	6	24.06	61.24	LXA05 LXC04	1600 1600	60 60	132 132
1805	6	30.07	76.57	LXA06 LXC05	2000 2000	75 75	158 165
2310	6	38.50	98.00	LXA07 LXC06	2500 2500	86 86	194 189
2887	6	48.11	122.50	LXA08 LXC07	3200 3200	100 100	220 220
3609	6	60.11	153.10	LXC09 LXC08	4000 4000	140 150	220 255
4546	6	75.78	192.90	LXC09	5000	150	255

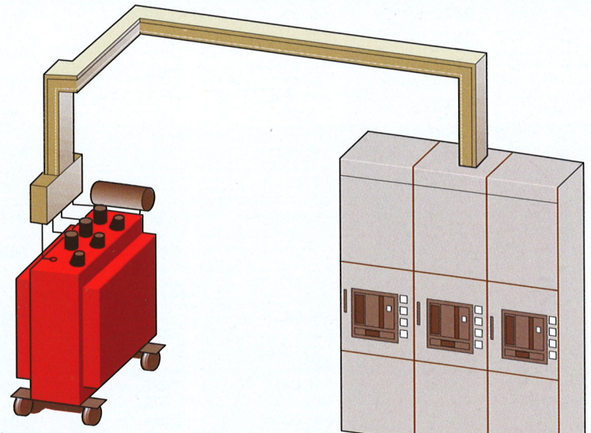

Figure 1: Connecting a transformer to a distribution board

LXA/LXC Busbar Trunking System

System components

Preliminary comments for tender specifications

Basic description of busbar trunking systems 800 A to 6300 A

Busbar trunking systems can be supplied as type-tested low-voltage switchgear and controlgear assemblies (TTA) that are ready to connect and install.

The following information is part of the calculation and contractual elements. It must be taken into account with the descriptions of the individual systems and related equipment, even if they are not mentioned in detail.

The busbar trunking system must be suitable for transporting energy, for example, between transformers and low-voltage sub-distribution boards, for distributing energy in order to supply entire areas, as well as for both horizontal and vertical installation.

The busbar trunking system must consist of listed system modules such as:

- Straight trunking units with/without tap-off points
- Feeder units for transformer, distribution board and cable feeder units
- Junction units with elbow, offset elbow, knee, offset knee, Z units and T units
- Tap-off units

All units must be available from the factory in standard and optional lengths. Flexible junction units and standard junction units as cable units are not permitted. Expansion units and fixed points must be designed as required.

The trunking units with tap-off openings must be fitted with pluggable tap-off units as required. The location and number of tap-off points must be optional. The pluggable tap-off units are protected against in correct mounting (180° orientation feature). The permanently installed tap-off units can only be fitted or removed when the system is de-energized and should be protected against incorrect mounting (180°orientation feature). Depending on the version being used, isolation of the pluggable tap-off units during removal is ensured either through a compulsory sequence of operations or cautionary instructions.

If necessary, the busbar trunking system can be equipped with an asbestos-free fire barrier for the wall or ceiling openings which complies with fire resistance class S120.

The enclosure is made from aluminium with a light grey RAL7035 paint finish. The cross-section of the trunking units must not exceed the specified dimensions in the Technical Data. The connection point of two trunking units must not protrude above the external level of the enclosure run.

The individual system modules must be connected by tightening a state-of-the-art single-bolt clamp. The conductors between two system units should not be connected with screws.

The busbars must be made from aluminium or copper and be isolated along their entire length, nickel-plated (aluminium) and tin-plated. The conductor cross-sections should not be below the values given in the Technical Data.

Fire load should not exceed the value given in the Technical Data.

Conformity and test certificates

The manufacturer of the busbar trunking system must maintain and certify an EN/ISO 9001 quality management system.

Certificates or declarations of conformity must confirm the following qualifications for the entire system:

- Type testing according to IEC/EN 60 439-1 and -2 (DIN VDE Part 500 and Part 502)
- Climatic proofing to DIN IEC 68 Part 2-3 and Part 2-30
- Fire barrier to DIN 4102 Part 12
- Proof that system is maintenance-free
- Freedom from silicon or halogens
- Separate busbars for PE

Reliable proof of special, additional features (such as sprinkler test) of system components must be available.

Sizes

The sizes depend on the rated current and the conductor material. There are a total of ten sizes. Seven sizes are designed as single systems and three sizes as double systems.

Single systems consist of an enclosure with 3 to 6 aluminium or copper busbars. Double systems have between 6 and 12 busbars in two enclosures.
The exact number of busbars depends on the conductor configuration required.

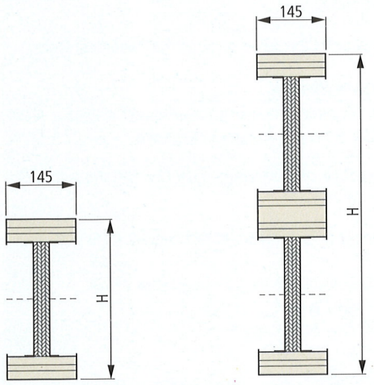

Sizes(H x B[1])			
Height H [mm]	**System**	**Height H [mm]**	**System**
137	LXA(C)01	439	LXA(C)08
137	LXA(C)02	599	LXA(C)09
162	LXC03	599	LXA10
162	LXA(C)04		
207	LXA(C)05		
287	LXA(C)06		
287	LXA(C)07		

1) Width B always 145 mm

Straight trunking units

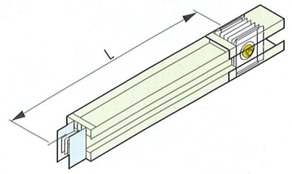

Straight trunking units for horizontal and vertical installation **without** tap-off points:

Standard lengths
1 m: LX.....-1
2 m: LX.....-2
3 m: LX.....-3

Optional lengths:
0.35 m – 0.99 m: LX.....-1W*
1.01 m – 1.99 m: LX.....-2W*
2.01 m – 2.99 m: LX.....-3W*

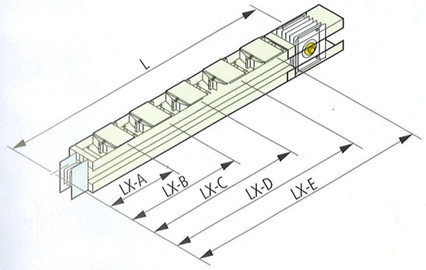

Straight trunking units for horizontal and vertical installation **with** tap-off points:

Standard lengths with up to 10 tap-off points
3 m: LX.....-3-ADO-U+LX-A(B, C, D, E)
2, 4, 6, 8 or 10 tap-off points selectable on both sides
LX.....-3-AD+LX-A(B, C, D, E)
1, 2, 3, 4 or 5 tap-off points selectable on one side
2 m: LX.....-2-1AD
1 tap-off point

Optional lengths with 1 tap-off point
1.50 m – 2.00 m: LX.....-1W*-1AD
2.01 m – 2.50 m: LX.....-2W*-1AD
2.51 m – 3.00 m: LX.....-3W*-1AD

Junction units

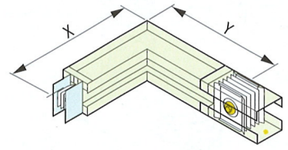

Elbow LX.....-L-X*/Y*

For LX.01 to LX.10
X = 0.35 – 1.09 m
Y = 0.35 – 1.09 m

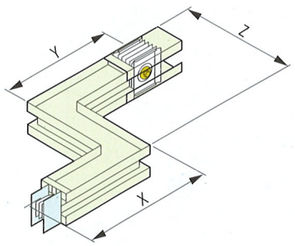

Z unit LX.....-X*/Y*/Z*

For LX.01 to LX.10
X/Y = 0.35 – 1.09 m
Z = 0.40 – 0.70 m

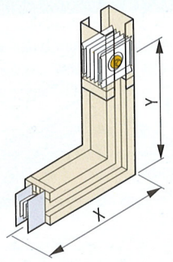

Knee LX.....–L–X*/Y*

For LX.01 to LX.04
X/Y = 0.35 – 1.09 m

For LX.05 to LX.07
X/Y = 0.50 – 1.21 m

For LX.08 to LX.10
X/Y = 0.80 – 1.52 m

* = Optional length in m

Important planning information:
The minimum limb lengths for X and Y (Z) with elbow and Z unit junction units depend on the standard enclosure width (145 mm), the knee junction unit depends on the changing enclosure height (depending on system size 137 mm, 162 mm, 207 mm, 287 mm, 439 mm or 599 mm)

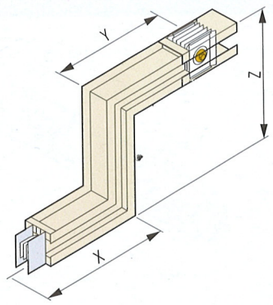

Z unit LX.....–Z–X*/Y*/Z*

For LX.01 to LX.04
X/Y = 0.33 – 1.09 m
Z = 0.36 – 0.70 m

For LX.05 to LX.07
X/Y = 0.48 – 1.21 m
Z = 0.50 – 1.00 m

For LX.08 to LX.10
X/Y = 0.79 – 1.52 m
Z = 1.80 – 1.60 m

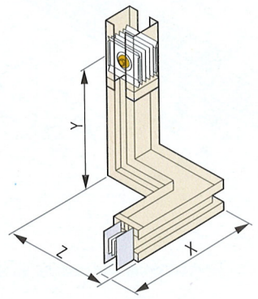

Offset elbow LX.....–L–X*/Y*/Z*

For LX.01 to LX.04
X/Y = 0.33 – 1.09 m
Z = 0.40 – 0.70 m

For LX.05 to LX.07
X/Y = 0.48 – 1.21 m
Z = 0.52 – 0.85 m

For LX.08 to LX.10
X/Y = 0.79 – 1.52 m
Z = 1.84 – 1.15 m

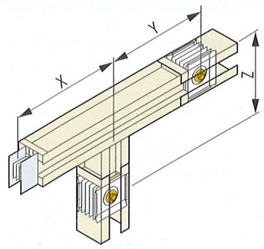

T unit LX.....–T–X*/Y*/Z*

For LX.01 to LX.04
X/Y/Z = 0.33 – 1.09 m

For LX.05 to LX.07
X/Y/Z = 0.48 – 1.21 m

For LX.08 to LX.10
X/Y/Z = 0.79 – 1.52 m

* = Optional length in m

Important planning information:
The minimum limb lengths for X, Y and Z with Z unit, offset elbow and T unit junction units depend on the changing enclosure height (depending on system size 137 mm, 162 mm, 207 mm, 287 mm, 439 mm or 599 mm)

LXA/LXC Busbar Trunking System
System components

3

Distribution board connection for Siemens power distribution systems

Connecting the Siemens power distribution system as a type–tested low–voltage switchgear and controlgear assembly (TTA) as per IEC/EN 60 439 –1 and –2

The power distribution board and LX busbar trunking system are connected using an integrated busbar trunking connection unit for rated currents up to 5000 A. This busbar connection can be made from above or below, thus ensuring flexible connections. The copper connections provided at the factory between the power distribution system and busbar trunking system offer a high short–circuit rating that is type–tested to ensure a high level of safety in power transmission.

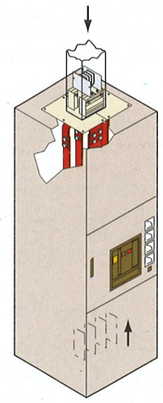

Connection unit for non-Siemens distribution boards

General

To connect the busbar system to a non-Siemens distribution board, an LX.... -FA connection unit for non-Siemens distribution boards can be used. The connection unit is built into the distribution board and serves as an interface to the copper connections of the distribution system.

Versions

The connection units for non-Siemens distribution boards are normally made of copper. Eight different conductor configurations are available depending on the type of system in place. The rated currents up to 5000 A meet the specifications given in the Technical Data. In accordance with IEC/EN 60 439-1 and 2 temperature rises caused by current heat should not exceed the permissible temperature limit for power distribution systems. The maximum temperature for the insulated busbars is 135°C. The terminal capacity for the copper connections can be found in the Technical Data.

Installing the connection unit

The distribution board manufacturer is responsible for designing and installing the copper connections of the distribution board's connection unit, or this work must at least be carried out in accordance with the manufacturer's instructions. The manufacturer must ensure that the required short-circuit rating is provided and that the permissible temperature limit of the connection unit for non-Siemens distribution boards is not exceeded.

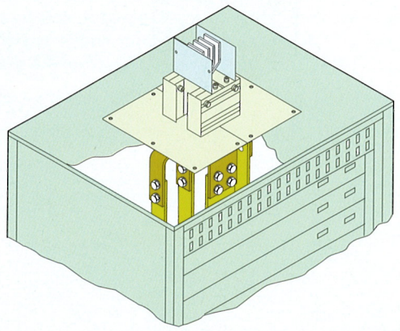

Connection units for transformers and distribution boards

The different rated currents, phase sequences and phase distances involved in transformers make for the wide range of transformers available.
This calls for a high level of flexibility when it comes to connecting busbar systems.

The universal connector unit can also be used for connecting distribution boards.

LX busbar trunking systems up to 6300 A include transformer connection units with a side busbar connection (LX.....-AS.) and with a busbar connection from the top (LX.....-AS.-T.).

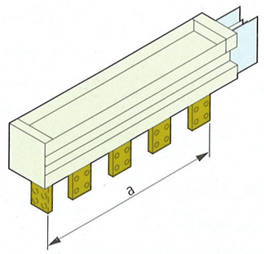

a: The total length depends on the distance between the phases of the connection units
(approx. 3 x lug spacing + 300 mm)

Connection unit LX.....-AS1
selectable lug spacing 115 – 400 mm

Connection unit LX.....-AS3
selectable lug spacing 405 – 750 mm
possible phase sequences for AS1 and AS3:
L1, L2, L3, N (PEN)
N (PEN), L3, L2, L1
L3, L2, L1, N (PEN)
N(PEN), L1, L2, L3

Connection unit LX.....-AS2
selectable lug spacing 450 – 750 mm
possible phase sequences:
L1, L2, N (PEN), L3
L3, N (PEN), L2, L1
L3, L2, N(PEN), L1
L1, N (PEN), L2, L3

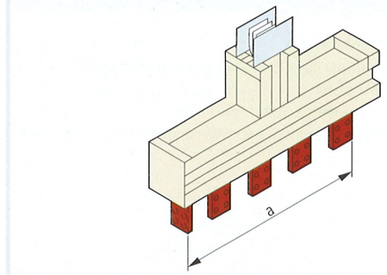

a: The total length depends on the distance between the phases of the connection units
(approx. 3 x lug spacing + 300 mm)

Connection unit LX.....-AS1-T
selectable lug spacing 115 – 400 mm

Connection unit LX.....-AS3-T
selectable lug spacing 405 – 750 mm
possible phase sequences for AS1 and AS3:
L1, L2, L3, N (PEN)
N (PEN), L3, L2, L1
L3, L2, L1, N (PEN)
N (PEN), L1, L2, L3

Connection unit LX.....-AS2-T
selectable lug spacing 450 – 750 mm
possible phase sequences:
L1, L2, N (PEN), L3
L3, N (PEN), L2, L1
L3, L2, N (PEN), L1
L1, N (PEN), L2, L3

Incoming cable connection

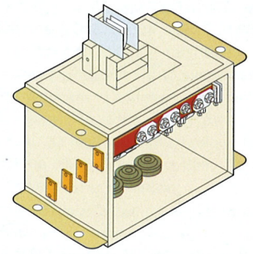

The LXA(C)....-KE cable feeder unit is used when the busbar system has to be supplied via cables.

The cable feeder unit is designed for rated currents from 800 to 3200 A.

Enclosure sizes
Three system-dependent enclosure sizes are available:
- Size 1: LXC01...-KE and LXC02...-KE
- Size 2: LXC03...-KE to LXC(A)05...-KE
- Size 3: LXC06...-KE and LXC07..-

Maximum dimensions:
920 mm x 639 mm x 490 mm (B x H x D).

Both multi-core and single-core cables can be used. Cross-sections of up to 300 mm^2 (bolt terminals) can be connected directly to the connection busbars of the cable connection unit.

The standard version includes metal flange plates and cable grommets. An undrilled aluminum plate is ready-fitted for single-core cables.

Tap-off units

General

For extensive power distribution, tap-off units in three sizes are available for 80 to 125 A, 160 to 250 A, 400 A, 630 A and 800 to 1250 A. The rated operational voltage (Ue) is 400 V. The solid enclosure guarantees IP54 protection irrespective of the mounting position.
They can be fitted with fuse switches or manually operated circuit-breakers, as well as bolts for the cable connection. For conductor systems (conductor configurations for type LX...6.) with an insulated PE conductor, tap-off units are provided with an additional separate PE connection.

Cable entry

Cable entry is possible from the side or from the end (exception: only from the end for tap-off units up to 125 A). Integrated flanges with cable grommets ensure secure entry for multi-core cable. Aluminium plates are used for single-core cable. These can be provided with cable glands at the required location.

Safety during operation

The tap-off units can not be opened unless the protective device is switched off manually. Once this is done, the cable connection area is no longer energized. The part of the contact device in the front of the tap-off unit is "finger-proof".

Implementing the tap-offs

Tap-offs are required for different amperages depending on the size and type of consumers involved. These are implemented by means of plug-in tap-off units from 80 to 630 A or bolt-on tap-off units from 800 to 1250 A.

Plug-in tap-off units

Tap-off units from 80 to 630 A

- Can be fitted with either fuse switches or circuit-breakers
- Tap-off via tap-off point
- Orientation feature prevents in correct fitting
- Protection against direct contact to IP20 during fitting to tap-off point

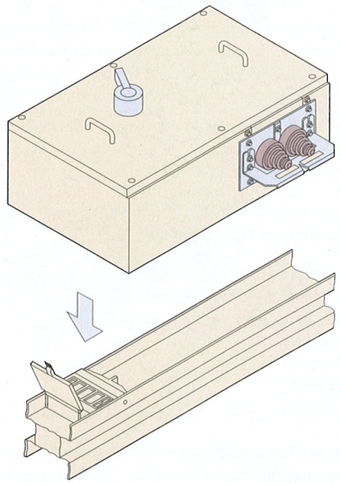

Bolt-on tap-off units

Tap-off units from 800 to1250 A

- Fitted with circuit-breaker
- The tap-off unit can only be installed when the system is de-energized
- Tap-off via joint block
- Orientation feature prevents incorrect fitting

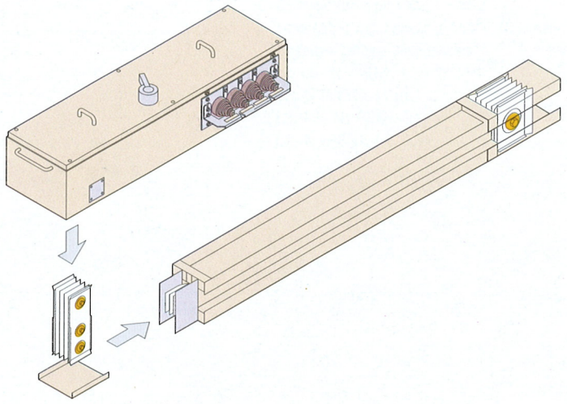

Accessories

End flange

An end flange is fitted at the end of busbar run if it does not feed another distribution board.

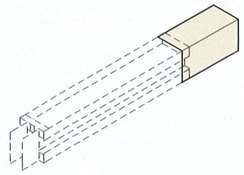

Joint block

An additional joint block is required if a busbar run is located between two feeder units, such as distribution boards, transformers, generators or cable feeder units.

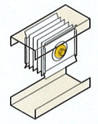

Fixing brackets for horizontal installation

Two different fixing brackets are available.

- Type LX-BH for horizontal mounting, edgewise
- Type LX..-BF for horizontal mounting, flat

Two LX-K clamping brackets secure the busbar trunking system on the support sections of the fixing bracket. Clamping brackets and support section are supplied with the fixing bracket.

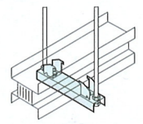

LX...-BH

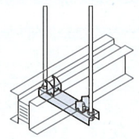

LX...-BF

Fixing brackets for vertical installation

Special spring brackets are required for installing vertical busbar runs.

- Type LX.....-BV for power transmission
- Type LX.....-BV-AK for power distribution

Type LX.....-BV-AK allows for the additional inherent weight of at least one tap-off unit per floor with a floor height of 3.40 m to 3.90 m.

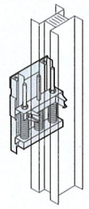

LX...-BV, LX...-BV-AK

LX trunking units

Standards and regulations		IEC/EN 60 439 Parts 1 and 2
Climatic proofing		Damp heat, constant, to IEC 60068-2-78 Damp heat, cyclic, to IEC 60068-2-30
Ambient temperature min./max./24-hour average	°C	-5/+40/+35
Degree of protection for trunking units		IP54/55 IP55 with additional components except for power transmission
Torque setting for joint block (For repeat usage)	Nm	120 ± 10
Busbar surface treatment		Insulated over the entire length, aluminium and tin-on-nickel plated
Trunking unit material		Paint-finished aluminium housing
Colour of trunking units		RAL 7035 (light grey)
Dimensions		→ chapter Dimension drawings
Rated insulation voltage U_i **trunking units** **to DIN VDE 0110, IEC 909**	 V~ V~	 690 800
Overvoltage category/ pollution degree		III/3 to EN 60 947
Rated operational voltage U_e **trunking units**	 V~	 690
Rated frequency	Hz	50

LXA..30 trunking units

System-dependent data			LXA	0130	0230	0430	0530	0630	0730	0830	0930	1030
Rated current	IP54/55	I_e	A	800	1000	1250	1600	2000	2500	3200	4000	4500
Conductor impedance												
• at 50 Hz and a busbar temperature of +20 °C	Resistance	R'_{20}	mΩ/m	0.117	0.084	0.056	0.036	0.027	0.023	0.018	0.014	0.011
	Reactance	X'_{20}	mΩ/m	0.028	0.031	0.024	0.017	0.009	0.011	0.009	0.005	0.012
	Impedance	Z'_{20}	mΩ/m	0.120	0.090	0.061	0.040	0.029	0.025	0.020	0.015	0.006
• at 50 Hz and when the busbars have attained operational temperature	Resistance	R'	mΩ/m	0.146	0.106	0.070	0.043	0.034	0.028	0.022	0.017	0.014
	Reactance	X'	mΩ/m	0.028	0.031	0.024	0.017	0.009	0.011	0.008	0.005	0.006
	Impedance	Z'	mΩ/m	0.149	0.110	0.074	0.046	0.029	0.025	0.024	0.018	0.015
• for 5-pole systems (PE) in the event of a fault to EN 60439-2 Appendix N	Resistance	R'_F	mΩ/m	0.174	0.154	0.123	0.079	0.072	0.069	0.055	0.040	0.040
	Reactance	X'_F	mΩ/m	0.084	0.085	0.069	0.056	0.040	0.044	0.040	0.025	0.028
	Impedance	Z'_F	mΩ/m	0.193	0.175	0.141	0.096	0.082	0.081	0.068	0.047	0.048
Zero impedance for 5-pole systems (PE) to IEC 909, DIN VDE 0102	Resistance	R'_0	mΩ/m	0.297	0.274	0.251	0.228	0.204	0.181	0.158	0.135	0.111
	Reactance	X'_0	mΩ/m	0.216	0.200	0.184	0.168	0.152	0.136	0.119	0.103	0.088
	Impedance	Z'_0	mΩ/m	0.367	0.339	0.311	0.283	0.254	0.226	0.197	0.169	0.141
Short-circuit rating												
Rated short-time withstand current												
• for phase conductors	rms value t = 1 s	I_{CW}	kA	25	35	50	60	75	86	100	140	150
• of the 5th conductor	rms value t = 1 s	I_{CW}	kA	15	21	30	36	45	51.6	60	60	70
Rated impulse withstand current	Peak value	I_{PK}	kA	53	70	110	132	158	194	220	255	255
Conductor material				Aluminium								
Number of busbars				3	3	3	3	3	3	6	6	6
Conductor cross-section	L1, L2, L3		mm^2	292	386	586	946	1192	1586	1892	2384	3172
Equivalent copper cross-section	PE = Enclosure		mm^2	948	948	1018	1135	1348	1348	2270	2694	2696
Combustive energy												
Trunking unit												
• without tap-off point			kWh/m	1.83	1.91	2.37	3.32	5.01	5.09	6.84	10.22	10.4
• per tap-off point			kWh	2.9	2.9	2.9	2.9	2.9	2.9	2.9	2.9	2.9
Max. fixing intervals												
for normal mechanical load												
• Busbar position: horizontal, edgewise			m	2	2	2	3	3	3	3	3	3
• Busbar position: horizontal, flat			m	2	2	2	2	2	2	2	2	2
Weights			kg/m	9.6	10.6	13.3	17.8	21.8	26.3	35.5	43.4	52.1

LXA..41 busbar trunking units

System-dependent data			LXA	0141	0241	0441	0541	0641	0741	0841	0941	1041
Rated current	IP54/55	I_e	A	800	1000	1250	1600	2000	2500	3200	4000	4500
Conductor impedance												
• at 50 Hz and a busbar temperature of +20 °C	Resistance	R'_{20}	mΩ/m	0.117	0.084	0.056	0.036	0.027	0.023	0.018	0.014	0.011
	Reactance	X'_{20}	mΩ/m	0.028	0.031	0.024	0.017	0.009	0.011	0.008	0.005	0.006
	Impedance	Z'_{20}	mΩ/m	0.120	0.090	0.061	0.040	0.029	0.025	0.020	0.015	0.012
• at 50 Hz and when the busbars have attained operational temperature	Resistance	R'	mΩ/m	0.146	0.106	0.070	0.043	0.034	0.028	0.022	0.017	0.014
	Reactance	X'	mΩ/m	0.028	0.031	0.024	0.017	0.009	0.011	0.008	0.005	0.006
	Impedance	Z'	mΩ/m	0.149	0.110	0.074	0.046	0.035	0.030	0.024	0.018	0.015
• for 4-pole systems in the event of a fault to EN 60439-2 Appendix N	Resistance	R'_F	mΩ/m	0.158	0.126	0.093	0.063	0.048	0.043	0.036	0.025	0.022
	Reactance	X'_F	mΩ/m	0.074	0.083	0.064	0.050	0.032	0.035	0.032	0.018	0.018
	Impedance	Z'_F	mΩ/m	0.175	0.150	0.113	0.080	0.058	0.055	0.048	0.030	0.028
Zero impedance for 4-pole systems to IEC 909, DIN VDE 0102	Resistance	R'_0	mΩ/m	0.227	0.190	0.145	0.102	0.081	0.073	0.063	0.041	0.036
	Reactance	X'_0	mΩ/m	0.132	0.133	0.101	0.080	0.047	0.057	0.050	0.026	0.026
	Impedance	Z'_0	mΩ/m	0.263	0.232	0.177	0.129	0.094	0.093	0.080	0.049	0.044
Short-circuit rating												
Rated short-time withstand current	rms value t = 1 s	I_{CW}	kA	25	35	50	60	75	86	100	140	150
Rated impulse withstand current	Peak value	I_{PK}	kA	53	70	110	132	158	194	220	255	255
Conductor material				Aluminium								
Number of busbars				4	4	4	4	4	4	8	8	8
Conductor cross-section	L1, L2, L3		mm^2	292	386	586	946	1192	1586	1892	2384	3172
Equivalent copper cross-section	PEN		mm^2	1109	1161	1341	1657	2006	2223	3314	4011	4446
Combustive energy Trunking unit												
• without tap-off point			kWh/m	1.95	2.04	2.53	3.54	5.33	5.42	7.28	10.88	11.07
• per tap-off point			kWh	2.9	2.9	2.9	2.9	2.9	2.9	2.9	2.9	2.9
Max. fixing intervals for normal mechanical load												
• Busbar position: horizontal, edgewise			m	2	2	2	3	3	3	3	3	3
• Busbar position: horizontal, flat			m	2	2	2	2	2	2	2	2	2
Weights			kg/m	10.6	12	15.2	20.8	25.6	31.3	42	51.3	62.6

LXA..51 busbar trunking units

System-dependent data			LXA	0151	0251	0451	0551	0651	0751	0851	0951	1051
Rated current	IP54/55	I_e	A	800	1000	1250	1600	2000	2500	3200	4000	4500
Conductor impedance												
• at 50 Hz and a busbar temperature of +20 °C	Resistance	R'_{20}	mΩ/m	0.117	0.084	0.056	0.036	0.027	0.023	0.018	0.014	0.011
	Reactance	X'_{20}	mΩ/m	0.028	0.031	0.024	0.017	0.009	0.011	0.009	0.005	0.012
	Impedance	Z'_{20}	mΩ/m	0.120	0.090	0.061	0.040	0.029	0.025	0.020	0.015	0.006
• at 50 Hz and when the busbars have attained operational temperature	Resistance	R'	mΩ/m	0.146	0.106	0.070	0.043	0.034	0.028	0.022	0.017	0.014
	Reactance	X'	mΩ/m	0.028	0.031	0.024	0.017	0.009	0.011	0.008	0.005	0.006
	Impedance	Z'	mΩ/m	0.149	0.110	0.074	0.046	0.035	0.030	0.024	0.018	0.015
• for 5-pole systems (PE) in the event of a fault to EN 60439-2 Appendix N	Resistance	R'_F	mΩ/m	0.174	0.154	0.123	0.079	0.072	0.069	0.055	0.040	0.040
	Reactance	X'_F	mΩ/m	0.084	0.085	0.069	0.056	0.040	0.044	0.040	0.025	0.028
	Impedance	Z'_F	mΩ/m	0.193	0.176	0.141	0.097	0.082	0.082	0.068	0.048	0.049
• for 5-pole systems (N) in the event of a fault to EN 60439-2 Appendix N	Resistance	R'_F	mΩ/m	0.249	0.192	0.133	0.086	0.064	0.055	0.047	0.032	0.028
	Reactance	X'_F	mΩ/m	0.113	0.122	0.095	0.072	0.046	0.047	0.043	0.023	0.023
	Impedance	Z'_F	mΩ/m	0.273	0.227	0.163	0.112	0.079	0.072	0.064	0.039	0.036
Zero impedance												
• for 5-pole systems (PE) to IEC 909, DIN VDE 0102	Resistance	R'_0	mΩ/m	0.281	0.274	0.240	0.159	0.153	0.154	0.121	0.092	0.095
	Reactance	X'_0	mΩ/m	0.198	0.200	0.161	0.130	0.094	0.101	0.097	0.063	0.069
	Impedance	Z'_0	mΩ/m	0.344	0.339	0.289	0.205	0.179	0.184	0.155	0.111	0.117
• for 5-pole systems (N) to IEC 909, DIN VDE 0102	Resistance	R'_0	mΩ/m	0.484	0.377	0.260	0.167	0.128	0.106	0.095	0.062	0.052
	Reactance	X'_0	mΩ/m	0.175	0.177	0.134	0.095	0.061	0.065	0.060	0.030	0.030
	Impedance	Z'_0	mΩ/m	0.515	0.417	0.293	0.192	0.142	0.125	0.112	0.069	0.060
Short-circuit rating												
Rated short-time withstand current												
• for phase conductors	rms value t = 1 s	I_{CW}	kA	25	35	50	60	75	86	100	140	150
• for neutral conductor	rms value t = 1 s	I_{CW}	kA	15	21	30	36	45	51.6	60	70	70
• of the 5th conductor	rms value t = 1 s	I_{CW}	kA	15	21	30	36	45	51.6	60	60	70
Rated impulse withstand current	Peak value	I_{PK}	kA	53	70	110	132	158	194	220	255	255
Conductor material				Aluminium								
Number of busbars				4	4	4	4	4	4	8	8	8
Conductor cross-section	L1, L2, L3		mm^2	292	386	586	946	1192	1586	1892	2384	3172
	N		mm^2	292	386	586	946	1192	1586	1892	2384	3172
Equivalent copper cross-section	PE = Enclosure		mm^2	948	948	1018	1135	1348	1348	2270	2694	2696
Combustive energy Trunking unit												
• without tap-off point			kWh/m	1.95	2.04	2.53	3.54	5.33	5.42	7.28	10.88	11.07
• per tap-off point			kWh	2.9	2.9	2.9	2.9	2.9	2.9	2.9	2.9	2.9
Max. fixing intervals for normal mechanical load												
• Busbar position: horizontal, edgewise			m	2	2	2	3	3	3	3	3	3
• Busbar position: horizontal, flat			m	2	2	2	2	2	2	2	2	2
Weights			kg/m	10.6	12	15.2	20.8	25.6	31.3	42	51.3	62.6

LXA..52 busbar trunking units

System-dependent data			LXA	0152	0252	0452	0552	0652	0752	0852	0952	1052
Rated current	IP54/55	I_e	A	800	1000	1250	1600	2000	2500	3200	4000	4500
Conductor impedance												
• at 50 Hz and a busbar temperature of +20 °C	Resistance	R'_{20}	mΩ/m	0.117	0.084	0.056	0.036	0.027	0.023	0.018	0.014	0.011
	Reactance	X'_{20}	mΩ/m	0.028	0.031	0.024	0.017	0.009	0.011	0.009	0.005	0.012
	Impedance	Z'_{20}	mΩ/m	0.120	0.090	0.061	0.040	0.029	0.025	0.020	0.015	0.006
• at 50 Hz and when the busbars have attained operational temperature	Resistance	R'	mΩ/m	0.146	0.106	0.070	0.043	0.034	0.028	0.022	0.017	0.014
	Reactance	X'	mΩ/m	0.028	0.031	0.024	0.017	0.009	0.011	0.008	0.005	0.006
	Impedance	Z'	mΩ/m	0.149	0.110	0.074	0.046	0.029	0.025	0.024	0.018	0.015
• for 5-pole systems (PE) in the event of a fault to EN 60439-2 Appendix N	Resistance	R'_F	mΩ/m	0.174	0.154	0.123	0.079	0.072	0.069	0.055	0.040	0.040
	Reactance	X'_F	mΩ/m	0.084	0.085	0.069	0.056	0.040	0.044	0.040	0.025	0.028
	Impedance	Z'_F	mΩ/m	0.193	0.175	0.141	0.096	0.082	0.081	0.068	0.047	0.048
• for 5-pole systems (N) in the event of a fault to EN 60439-2 Appendix N	Resistance	R'_F	mΩ/m	0.187	0.166	0.146	0.125	0.104	0.083	0.062	0.042	0.021
	Reactance	X'_F	mΩ/m	0.133	0.122	0.110	0.099	0.088	0.077	0.065	0.054	0.043
	Impedance	Z'_F	mΩ/m	0.229	0.206	0.182	0.159	0.136	0.113	0.089	0.068	0.047
Zero impedance												
• for 5-pole systems (PE) to IEC 909, DIN VDE 0102	Resistance	R'_0	mΩ/m	0.297	0.274	0.251	0.228	0.204	0.181	0.158	0.135	0.111
	Reactance	X'_0	mΩ/m	0.216	0.200	0.184	0.168	0.152	0.136	0.119	0.103	0.088
	Impedance	Z'_0	mΩ/m	0.367	0.339	0.311	0.283	0.254	0.226	0.197	0.169	0.141
• for 5-pole systems (N) to IEC 909, DIN VDE 0102	Resistance	R'_0	mΩ/m	0.100	0.092	0.083	0.074	0.066	0.058	0.049	0.041	0.032
	Reactance	X'_0	mΩ/m	0.195	0.177	0.159	0.141	0.123	0.105	0.087	0.068	0.050
	Impedance	Z'_0	mΩ/m	0.219	0.199	0.179	0.159	0.139	0.119	0.099	0.079	0.059
Short-circuit rating												
Rated short-time withstand current												
• for phase conductors	rms value t = 1 s	I_{CW}	kA	25	35	50	60	75	86	100	140	150
• for neutral conductor	rms value t = 1 s	I_{CW}	kA	15	21	30	36	45	51.6	60	70	70
• of the 5th conductor	rms value t = 1 s	I_{CW}	kA	15	21	30	36	45	51.6	60	60	70
Rated impulse withstand current	Peak value	I_{PK}	kA	53	70	110	132	158	194	220	255	255
Conductor material				Aluminium								
Number of busbars				5	5	5	5	5	5	10	10	10
Conductor cross-section	L1, L2, L3		mm^2	292	386	586	946	1192	1586	1892	2384	3172
	N		mm^2	584	772	1172	1892	2384	3172	3784	4768	6344
Equivalent copper cross-section	PE = Enclosure		mm^2	948	948	1018	1135	1348	1348	2270	2694	2696
Combustive energy												
Trunking unit												
• without tap-off point			kWh/m	2.43	2.55	3.16	4.42	6.66	6.77	9.1	13.6	13.83
• per tap-off point			kWh	2.9	2.9	2.9	2.9	2.9	2.9	2.9	2.9	2.9
Max. fixing intervals												
for normal mechanical load												
• Busbar position: horizontal, edgewise			m	2	2	2	3	3	3	3	3	3
• Busbar position: horizontal, flat			m	2	2	2	2	2	2	2	2	2
Weights			kg/m	11.6	13.3	17	23.8	29.3	36.3	48.5	59.2	73.2

LXA..61 busbar trunking units

System-dependent data			LXA	0161	0261	0461	0561	0661	0761	0861	0961	1061
Rated current	IP54/55	I_e	A	800	1000	1250	1600	2000	2500	3200	4000	4500
Conductor impedance												
• at 50 Hz and a busbar temperature of +20 °C	Resistance	R'_{20}	mΩ/m	0.117	0.084	0.056	0.036	0.027	0.023	0.018	0.014	0.011
	Reactance	X'_{20}	mΩ/m	0.028	0.031	0.024	0.017	0.009	0.011	0.009	0.005	0.012
	Impedance	Z'_{20}	mΩ/m	0.120	0.090	0.061	0.040	0.029	0.025	0.020	0.015	0.016
• at 50 Hz and when the busbars have attained operational temperature	Resistance	R'	mΩ/m	0.146	0.106	0.070	0.043	0.034	0.028	0.022	0.017	0.014
	Reactance	X'	mΩ/m	0.028	0.031	0.024	0.017	0.009	0.011	0.008	0.005	0.006
	Impedance	Z'	mΩ/m	0.149	0.110	0.074	0.046	0.029	0.025	0.024	0.018	0.015
• for 5-pole systems (PE) in the event of a fault to EN 60439-2 Appendix N	Resistance	R'_F	mΩ/m	0.174	0.154	0.123	0.079	0.072	0.069	0.055	0.040	0.040
	Reactance	X'_F	mΩ/m	0.084	0.085	0.069	0.056	0.040	0.044	0.040	0.025	0.028
	Impedance	Z'_F	mΩ/m	0.193	0.175	0.141	0.096	0.082	0.081	0.068	0.047	0.048
• for 5-pole systems (N) in the event of a fault to EN 60439-2 Appendix N	Resistance	R'_F	mΩ/m	0.249	0.221	0.194	0.166	0.138	0.111	0.083	0.056	0.028
	Reactance	X'_F	mΩ/m	0.133	0.122	0.110	0.099	0.088	0.077	0.065	0.054	0.043
	Impedance	Z'_F	mΩ/m	0.282	0.252	0.223	0.193	0.163	0.135	0.105	0.077	0.051
Zero impedance												
• for 5-pole systems (PE) to IEC 909, DIN VDE 0102	Resistance	R'_0	mΩ/m	0.297	0.274	0.251	0.228	0.204	0.181	0.158	0.135	0.111
	Reactance	X'_0	mΩ/m	0.216	0.200	0.184	0.168	0.152	0.136	0.119	0.103	0.088
	Impedance	Z'_0	mΩ/m	0.367	0.339	0.311	0.283	0.254	0.226	0.197	0.169	0.141
• for 5-pole systems (N) to IEC 909, DIN VDE 0102	Resistance	R'_0	mΩ/m	0.484	0.430	0.376	0.322	0.268	0.214	0.160	0.106	0.052
	Reactance	X'_0	mΩ/m	0.195	0.177	0.159	0.141	0.123	0.105	0.087	0.068	0.050
	Impedance	Z'_0	mΩ/m	0.521	0.465	0.408	0.351	0.294	0.238	0.182	0.125	0.072
Short-circuit rating												
Rated short-time withstand current												
• for phase conductors	rms value t = 1 s	I_{CW}	kA	25	35	50	60	75	86	100	140	150
• for neutral conductor	rms value t = 1 s	I_{CW}	kA	15	21	30	36	45	51.6	60	70	70
• of the 5th conductor	rms value t = 1 s	I_{CW}	kA	15	21	30	36	45	51.6	60	60	70
Rated impulse withstand current	Peak value	I_{PK}	kA	53	70	110	132	158	194	220	255	255
Conductor material				Aluminium								
Number of busbars				5	5	5	5	5	5	10	10	10
Conductor cross-section	L1, L2, L3, (PE)[1]		mm^2	292	386	586	946	1192	1586	1892	2384	3172
	N		mm^2	292	386	586	946	1192	1586	1892	2384	3172
Equivalent copper cross-section	PE = Enclosure		mm^2	948	948	1018	1135	1348	1348	2270	2694	2696
Combustive energy												
Trunking unit												
• without tap-off point			kWh/m	2.43	2.55	3.16	4.42	6.66	6.77	9.1	13.6	13.83
• per tap-off point			kWh	2.9	2.9	2.9	2.9	2.9	2.9	2.9	2.9	2.9
Max. fixing intervals												
for normal mechanical load												
• Busbar position: horizontal, edgewise			m	2	2	2	3	3	3	3	3	3
• Busbar position: horizontal, flat			m	2	2	2	2	2	2	2	2	2
Weights			kg/m	11.6	13.3	17	23.8	29.3	36.3	48.5	59.2	73.2

1) Insulated PE conductor

LXA..62 busbar trunking units

System-dependent data			LXA	0162	0262	0462	0562	0662	0762	0862	0962	1062
Rated current	IP54/55	I_e	A	800	1000	1250	1600	2000	2500	3200	4000	4500
Conductor impedance												
• at 50 Hz and a busbar temperature of +20 °C	Resistance	R'_{20}	mΩ/m	0.117	0.084	0.056	0.036	0.027	0.023	0.018	0.014	0.011
	Reactance	X'_{20}	mΩ/m	0.028	0.031	0.024	0.017	0.009	0.011	0.009	0.005	0.012
	Impedance	Z'_{20}	mΩ/m	0.120	0.090	0.061	0.040	0.029	0.025	0.020	0.015	0.016
• at 50 Hz and when the busbars have attained operational temperature	Resistance	R'	m_Ω/m	0.146	0.106	0.070	0.043	0.034	0.028	0.022	0.017	0.014
	Reactance	X'	mΩ/m	0.028	0.031	0.024	0.017	0.009	0.011	0.008	0.005	0.006
	Impedance	Z'	mΩ/m	0.149	0.110	0.074	0.046	0.029	0.025	0.024	0.018	0.015
• for 5-pole systems (PE) in the event of a fault to EN 60439-2 Appendix N	Resistance	R'_F	mΩ/m	0.174	0.154	0.123	0.079	0.072	0.069	0.055	0.040	0.040
	Reactance	X'_F	mΩ/m	0.084	0.085	0.069	0.056	0.040	0.044	0.040	0.025	0.028
	Impedance	Z'_F	mΩ/m	0.193	0.175	0.141	0.096	0.082	0.081	0.068	0.047	0.048
• for 5-pole systems (N) in the event of a fault to EN 60439-2 Appendix N	Resistance	R'_F	mΩ/m	0.187	0.166	0.146	0.125	0.104	0.083	0.062	0.042	0.021
	Reactance	X'_F	mΩ/m	0.133	0.122	0.110	0.099	0.088	0.077	0.065	0.054	0.043
	Impedance	Z'_F	mΩ/m	0.229	0.206	0.182	0.159	0.136	0.113	0.089	0.068	0.047
Zero impedance												
• for 5-pole systems (PE) to IEC 909, DIN VDE 0102	Resistance	R'_0	mΩ/m	0.297	0.274	0.251	0.228	0.204	0.181	0.158	0.135	0.111
	Reactance	X'_0	mΩ/m	0.216	0.200	0.184	0.168	0.152	0.136	0.119	0.103	0.088
	Impedance	Z'_0	mΩ/m	0.367	0.339	0.311	0.283	0.254	0.226	0.197	0.169	0.141
• for 5-pole systems (N) to IEC 909, DIN VDE 0102	Resistance	R'_0	mΩ/m	0.100	0.092	0.083	0.074	0.066	0.058	0.049	0.041	0.032
	Reactance	X'_0	mΩ/m	0.195	0.177	0.159	0.141	0.123	0.105	0.087	0.068	0.050
	Impedance	Z'_0	mΩ/m	0.219	0.199	0.179	0.159	0.139	0.119	0.099	0.079	0.059
Short-circuit rating												
Rated short-time withstand current												
• for phase conductors	rms value t = 1 s	I_{CW}	kA	25	35	50	60	75	86	100	140	150
• for neutral conductor	rms value t = 1 s	I_{CW}	kA	15	21	30	36	45	51.6	60	70	70
• of the 5th conductor	rms value t = 1 s	I_{CW}	kA	15	21	30	36	45	51.6	60	60	70
Rated impulse withstand current	Peak value	I_{PK}	kA	53	70	110	132	158	194	220	255	255
Conductor material				Aluminium								
Number of busbars				6	6	6	6	6	6	12	12	12
Conductor cross-section	L1, L2, L3, (PE) [1]		mm^2	292	386	586	946	1192	1586	1892	2384	3172
	N		mm^2	584	772	1172	1892	2384	3172	3784	4768	6344
Equivalent copper cross-section	PE = Enclosure		mm^2	948	948	1018	1135	1348	1348	2270	2694	2696
Combustive energy												
Trunking unit												
• without tap-off point			kWh/m	2.92	3.06	3.79	5.31	7.99	8.13	10.92	16.32	16.6
• per tap-off point			kWh	2.9	2.9	2.9	2.9	2.9	2.9	2.9	2.9	2.9
Max. fixing intervals												
for normal mechanical load												
• Busbar position: horizontal, edgewise			m	2	2	2	3	3	3	3	3	3
• Busbar position: horizontal, flat			m	2	2	2	2	2	2	2	2	2
Weights			kg/m	12.6	14.7	18.9	26.8	33.1	41.3	55	67.2	83.7

1) Insulated PE conductor

LXC..30 busbar trunking units

System-dependent data			LXC	0130	0230	0330	0430	0530	0630	0730	0830	0930	1030
Rated current	IP54/55	I_e	A	1000	1250	1400	1600	2000	2500	3200	4000	5000	–
Conductor impedance													
• at 50 Hz and a busbar temperature of +20 °C	Resistance	R'_{20}	mΩ/m	0.065	0.051	0.044	0.037	0.027	0.017	0.013	0.011	0.009	–
	Reactance	X'_{20}	mΩ/m	0.027	0.031	0.020	0.026	0.013	0.009	0.011	0.008	0.005	–
	Impedance	Z'_{20}	mΩ/m	0.071	0.059	0.048	0.045	0.030	0.019	0.017	0.014	0.010	–
• at 50 Hz and when the busbars have attained operational temperature	Resistance	R'	mΩ/m	0.083	0.065	0.055	0.045	0.035	0.021	0.016	0.014	0.011	–
	Reactance	X'	mΩ/m	0.027	0.031	0.020	0.026	0.013	0.009	0.011	0.008	0.005	–
	Impedance	Z'	mΩ/m	0.087	0.072	0.059	0.051	0.037	0.022	0.019	0.016	0.012	–
• for 5-pole systems (PE) in the event of a fault to EN 60439-2 Appendix N	Resistance	R'_F	mΩ/m	0.137	0.125	0.113	0.101	0.089	0.077	0.065	0.053	0.041	–
	Reactance	X'_F	mΩ/m	0.092	0.085	0.078	0.070	0.063	0.056	0.049	0.041	0.034	–
	Impedance	Z'_F	mΩ/m	0.165	0.151	0.137	0.122	0.109	0.095	0.081	0.067	0.053	–
Zero impedance													
• for 5-pole systems (PE) to IEC 909, DIN VDE 0102	Resistance	R'_0	mΩ/m	0.274	0.254	0.233	0.213	0.193	0.172	0.152	0.132	0.111	–
	Reactance	X'_0	mΩ/m	0.207	0.191	0.175	0.160	0.144	0.128	0.113	0.097	0.082	–
	Impedance	Z'_0	mΩ/m	0.343	0.317	0.291	0.266	0.240	0.214	0.189	0.163	0.138	–
Short-circuit rating													
Rated short-time withstand current													
• for phase conductors	rms value t = 1 s	I_{CW}	kA	38	50	57	60	75	86	100	150	150	–
• of the 5th conductor	rms value t = 1 s	I_{CW}	kA	23	30	34	36	45	51	60	70	70	–
Rated impulse withstand current	Peak value	I_{PK}	kA	80	110	125	132	165	189	220	255	255	–
Conductor material				Copper									
Number of busbars				3	3	3	3	3	3	3	6	6	–
Conductor cross-section	L1, L2, L3		mm^2	292	386	442	586	712	1192	1586	1892	2384	–
Equivalent copper cross-section	PE = Enclosure		mm^2	948	948	1018	1018	1135	1348	1348	2270	2696	–
Combustive energy													
Trunking unit													
• without tap-off point			kWh/m	1.83	1.91	2.27	2.37	3.27	5.01	5.09	6.84	10.22	–
• per tap-off point			kWh	2.9	2.9	2.9	2.9	2.9	2.9	2.9	2.9	2.9	–
Max. fixing intervals													
for normal mechanical load													
• Busbar position: horizontal, edgewise			m	2	2	2	2	3	3	3	3	3	–
• Busbar position: horizontal, flat			m	2	2	2	2	2	2	2	2	2	–
Weights			kg/m	15.0	17.8	19.9	24.2	28.6	44.0	55.8	70.7	87.8	–

LXC..41 busbar trunking units

System-dependent data				LXC	0141	0241	0341	0441	0541	0641	0741	0841	0941	1041
Rated current	IP54/55	I_e	A		1000	1250	1400	1600	2000	2500	3200	4000	5000	–
Conductor impedance														
• at 50 Hz and a busbar temperature of +20 °C	Resistance	R'_{20}	mΩ/m		0.065	0.051	0.044	0.037	0.027	0.017	0.013	0.011	0.009	–
	Reactance	X'_{20}	mΩ/m		0.027	0.031	0.020	0.026	0.013	0.009	0.011	0.008	0.005	–
	Impedance	Z'_{20}	mΩ/m		0.071	0.059	0.048	0.045	0.030	0.019	0.017	0.014	0.010	–
• at 50 Hz and when the busbars have attained operational temperature	Resistance	R'	mΩ/m		0.083	0.065	0.055	0.045	0.035	0.021	0.016	0.014	0.011	–
	Reactance	X'	mΩ/m		0.027	0.031	0.020	0.026	0.013	0.009	0.011	0.008	0.005	–
	Impedance	Z'	mΩ/m		0.087	0.072	0.059	0.051	0.037	0.022	0.020	0.016	0.012	–
• for 4-pole systems in the event of a fault to EN 60439-2 Appendix N	Resistance	R'_F	mΩ/m		0.107	0.090	0.076	0.070	0.052	0.036	0.032	0.025	0.018	–
	Reactance	X'_F	mΩ/m		0.079	0.081	0.060	0.065	0.047	0.033	0.037	0.029	0.018	–
	Impedance	Z'_F	mΩ/m		0.133	0.121	0.097	0.095	0.070	0.049	0.049	0.038	0.026	–
Zero impedance														
• for 4-pole systems to IEC 909, DIN VDE 0102	Resistance	R'_0	mΩ/m		0.172	0.147	0.121	0.114	0.089	0.064	0.054	0.047	0.032	–
	Reactance	X'_0	mΩ/m		0.121	0.127	0.092	0.095	0.067	0.046	0.049	0.043	0.026	–
	Impedance	Z'_0	mΩ/m		0.210	0.194	0.152	0.148	0.111	0.079	0.073	0.064	0.042	–
Short-circuit rating														
Rated short-time withstand current	rms value t = 1 s	I_{CW}	kA		38	50	57	60	75	86	100	150	150	–
Rated impulse withstand current	Peak value	I_{PK}	kA		80	110	125	132	165	189	220	255	255	–
Conductor material					Copper									
Number of busbars					4	4	4	4	4	4	4	8	8	–
Conductor cross-section	L1, L2, L3		mm^2		292	386	442	586	712	1192	1586	1892	2384	–
Equivalent copper cross-section	PEN		mm^2		1240	1334	1460	1604	1847	2540	2934	4162	5080	–
Combustive energy														
Trunking unit														
• without tap-off point			kWh/m		1.95	2.04	2.42	2.53	3.48	5.33	5.42	7.28	10.88	–
• per tap-off point			kWh		2.9	2.9	2.9	2.9	2.9	2.9	2.9	2.9	2.9	–
Max. fixing intervals														
for normal mechanical load														
• Busbar position: horizontal, edgewise			m		2	2	2	2	3	3	3	3	3	–
• Busbar position: horizontal, flat			m		2	2	2	2	2	2	2	2	2	–
Weights			kg/m		17.9	21.5	24.1	29.7	35.3	55.2	70.6	88.9	110.5	–

LXC..51 busbar trunking units

System-dependent data				LXC	0151	0251	0351	0451	0551	0651	0751	0851	0951	1051
Rated current	IP54/55	I_e	A		1000	1250	1400	1600	2000	2500	3200	4000	5000	–
Conductor impedance														
• at 50 Hz and a busbar temperature of +20 °C	Resistance	R'_{20}	mΩ/m		0.065	0.051	0.044	0.037	0.027	0.017	0.013	0.011	0.009	–
	Reactance	X'_{20}	mΩ/m		0.027	0.031	0.020	0.026	0.013	0.009	0.011	0.008	0.005	–
	Impedance	Z'_{20}	mΩ/m		0.071	0.059	0.048	0.045	0.030	0.019	0.017	0.014	0.010	–
• at 50 Hz and when the busbars have attained operational temperature	Resistance	R'	mΩ/m		0.083	0.065	0.055	0.045	0.035	0.021	0.016	0.014	0.011	–
	Reactance	X'	mΩ/m		0.027	0.031	0.020	0.026	0.013	0.009	0.011	0.008	0.005	–
	Impedance	Z'	mΩ/m		0.087	0.072	0.059	0.051	0.037	0.022	0.019	0.016	0.012	–
• for 5-pole systems (PE) in the event of a fault to EN 60439-2 Appendix N	Resistance	R'_F	mΩ/m		0.132	0.119	0.101	0.101	0.082	0.065	0.063	0.046	0.036	–
	Reactance	X'_F	mΩ/m		0.084	0.085	0.070	0.070	0.056	0.040	0.042	0.033	0.026	–
	Impedance	Z'_F	mΩ/m		0.156	0.146	0.123	0.123	0.099	0.076	0.075	0.056	0.044	–
• for 5-pole systems (N) in the event of a fault to EN 60439-2 Appendix N	Resistance	R'_F	mΩ/m		0.149	0.127	0.104	0.090	0.065	0.042	0.039	0.030	0.021	–
	Reactance	X'_F	mΩ/m		0.109	0.118	0.084	0.091	0.062	0.041	0.050	0.036	0.022	–
	Impedance	Z'_F	mΩ/m		0.184	0.174	0.134	0.128	0.090	0.058	0.064	0.047	0.030	–
Zero impedance														
• for 5-pole systems (PE) to IEC 909, DIN VDE 0102	Resistance	R'_0	mΩ/m		0.252	0.245	0.203	0.213	0.181	0.156	0.152	0.108	0.089	–
	Reactance	X'_0	mΩ/m		0.192	0.191	0.161	0.157	0.132	0.096	0.096	0.079	0.067	–
	Impedance	Z'_0	mΩ/m		0.317	0.310	0.259	0.264	0.224	0.183	0.180	0.134	0.111	–
• for 5-pole systems (N) to IEC 909, DIN VDE 0102	Resistance	R'_0	mΩ/m		0.293	0.244	0.204	0.173	0.129	0.082	0.074	0.061	0.043	–
	Reactance	X'_0	mΩ/m		0.153	0.161	0.112	0.119	0.080	0.053	0.062	0.049	0.030	–
	Impedance	Z'_0	mΩ/m		0.330	0.292	0.233	0.210	0.152	0.098	0.096	0.078	0.053	–
Short-circuit rating														
Rated short-time withstand current														
• for phase conductors	rms value t = 1 s	I_{CW}	kA		38	50	57	60	75	86	100	150	150	–
• for neutral conductor	rms value t = 1 s	I_{CW}	kA		23	30	34	36	45	51	60	70	70	–
• of the 5th conductor	rms value t = 1 s	I_{CW}	kA		23	30	34	36	45	51	60	70	70	–
Rated impulse withstand current	Peak value	I_{PK}	kA		80	110	125	132	165	189	220	255	255	–
Conductor material					Copper									
Number of busbars					4	4	4	4	4	4	4	8	8	–
Conductor cross-section	L1, L2, L3		mm^2		292	386	442	586	712	1192	1586	1892	2384	–
	N		mm^2		292	386	442	586	712	1192	1586	1892	2384	–
Equivalent copper cross-section	PE = Enclosure		mm^2		948	948	1018	1018	1135	1348	1348	2270	2696	–
Combustive energy														
Trunking unit														
• without tap-off point			kWh/m		1.95	2.04	2.42	2.53	3.48	5.33	5.42	7.28	10.88	–
• per tap-off point			kWh		2.9	2.9	2.9	2.9	2.9	2.9	2.9	2.9	2.9	–
Max. fixing intervals														
for normal mechanical load														
• Busbar position: horizontal, edgewise			m		2	2	2	2	3	3	3	3	3	–
• Busbar position: horizontal, flat			m		2	2	2	2	2	2	2	2	2	–
Weights			kg/m		17.9	21.5	24.1	29.7	35.3	55.2	70.6	88.9	110.5	–

LXC..52 busbar trunking units

System-dependent data			LXC	0152	0252	0352	0452	0552	0652	0752	0852	0952	1052
Rated current	IP54/55	I_e	A	1000	1250	1400	1600	2000	2500	3200	4000	5000	–
Conductor impedance													
• at 50 Hz and a busbar temperature of +20 °C	Resistance	R'_{20}	mΩ/m	0.065	0.051	0.044	0.037	0.027	0.017	0.013	0.011	0.009	–
	Reactance	X'_{20}	mΩ/m	0.027	0.031	0.020	0.026	0.013	0.009	0.011	0.008	0.005	–
	Impedance	Z'_{20}	mΩ/m	0.071	0.059	0.048	0.045	0.030	0.019	0.017	0.014	0.010	–
• at 50 Hz and when the busbars have attained operational temperature	Resistance	R'	mΩ/m	0.083	0.065	0.055	0.045	0.035	0.021	0.016	0.014	0.011	–
	Reactance	X'	mΩ/m	0.027	0.031	0.020	0.026	0.013	0.009	0.011	0.008	0.005	–
	Impedance	Z'	mΩ/m	0.087	0.072	0.059	0.051	0.037	0.022	0.019	0.016	0.012	–
• for 5-pole systems (PE) in the event of a fault to EN 60439-2 Appendix N	Resistance	R'_F	mΩ/m	0.137	0.125	0.113	0.101	0.089	0.077	0.065	0.053	0.041	–
	Reactance	X'_F	mΩ/m	0.092	0.085	0.078	0.070	0.063	0.056	0.049	0.041	0.034	–
	Impedance	Z'_F	mΩ/m	0.165	0.151	0.137	0.122	0.109	0.095	0.081	0.067	0.053	–
• for 5-pole systems (N) in the event of a fault to EN 60439-2 Appendix N	Resistance	R'_F	mΩ/m	0.112	0.100	0.088	0.076	0.064	0.052	0.040	0.028	0.016	–
	Reactance	X'_F	mΩ/m	0.129	0.118	0.107	0.096	0.085	0.074	0.063	0.052	0.042	–
	Impedance	Z'_F	mΩ/m	0.170	0.154	0.138	0.122	0.106	0.090	0.074	0.059	0.044	–
Zero impedance													
• for 5-pole systems (PE) to IEC 909, DIN VDE 0102	Resistance	R'_0	mΩ/m	0.274	0.254	0.233	0.213	0.193	0.172	0.152	0.132	0.111	–
	Reactance	X'_0	mΩ/m	0.207	0.191	0.175	0.160	0.144	0.128	0.113	0.097	0.082	–
	Impedance	Z'_0	mΩ/m	0.343	0.317	0.291	0.266	0.240	0.214	0.189	0.163	0.138	–
• for 5-pole systems (N) to IEC 909, DIN VDE 0102	Resistance	R'_0	mΩ/m	0.220	0.197	0.173	0.149	0.126	0.103	0.079	0.056	0.032	–
	Reactance	X'_0	mΩ/m	0.177	0.162	0.146	0.131	0.115	0.100	0.084	0.069	0.053	–
	Impedance	Z'_0	mΩ/m	0.282	0.255	0.226	0.198	0.170	0.143	0.115	0.088	0.061	–
Short-circuit rating													
Rated short-time withstand current													
• for phase conductors	rms value t = 1 s	I_{CW}	kA	38	50	57	60	75	86	100	150	150	–
• for neutral conductor	rms value t = 1 s	I_{CW}	kA	23	30	34	36	45	51	60	70	70	–
• of the 5th conductor	rms value t = 1 s	I_{CW}	kA	23	30	34	36	45	51	60	70	70	–
Rated impulse withstand current	Peak value	I_{PK}	kA	80	110	125	132	165	189	220	255	255	–
Conductor material				Copper									
Number of busbars				5	5	5	5	5	5	5	10	10	–
Conductor cross-section	L1, L2, L3		mm^2	292	386	442	586	712	1192	1586	1892	2384	–
	N		mm^2	584	772	884	1172	1424	2384	3172	3784	4768	–
Equivalent copper cross-section	PE = Enclosure		mm^2	948	948	1018	1018	1135	1348	1348	2270	2696	–
Combustive energy													
Trunking unit													
• without tap-off point			kWh/m	2.43	2.55	3.02	3.16	4.35	6.66	6.77	9.1	13.6	–
• per tap-off point			kWh	2.9	2.9	2.9	2.9	2.9	2.9	2.9	2.9	2.9	–
Max. fixing intervals													
for normal mechanical load													
• Busbar position: horizontal, edgewise			m	2	2	2	2	3	3	3	3	3	–
• Busbar position: horizontal, flat			m	2	2	2	2	2	2	2	2	2	–
Weights			kg/m	20.7	25.3	28.2	35.2	41.9	66.3	85.5	107.2	133.2	–

LXC..53 busbar trunking units

System-dependent data			LXC	0153	0253	0353	0453	0553	0653	0753	0853	0953	1053
Rated current	IP54/55	I_e	A	1000	1250	1400	1600	2000	2500	3200	4000	5000	–
Conductor impedance													
• at 50 Hz and a busbar temperature of +20 °C	Resistance	R'_{20}	mΩ/m	0.065	0.051	0.044	0.037	0.027	0.017	0.013	0.011	0.009	–
	Reactance	X'_{20}	mΩ/m	0.027	0.031	0.020	0.026	0.013	0.009	0.011	0.008	0.005	–
	Impedance	Z'_{20}	mΩ/m	0.071	0.059	0.048	0.045	0.030	0.019	0.017	0.014	0.010	–
• at 50 Hz and when the busbars have attained operational temperature	Resistance	R'	mΩ/m	0.083	0.065	0.055	0.045	0.035	0.021	0.016	0.014	0.011	–
	Reactance	X'	mΩ/m	0.027	0.031	0.020	0.026	0.013	0.009	0.011	0.008	0.005	–
	Impedance	Z'	mΩ/m	0.087	0.072	0.059	0.051	0.037	0.022	0.019	0.016	0.012	–
• for 5-pole systems (PE) in the event of a fault to EN 60439-2 Appendix N	Resistance	R'_F	mΩ/m	0.116	0.104	0.091	0.079	0.067	0.055	0.043	0.031	0.020	–
	Reactance	X'_F	mΩ/m	0.088	0.081	0.073	0.066	0.058	0.050	0.043	0.035	0.027	–
	Impedance	Z'_F	mΩ/m	0.145	0.131	0.116	0.102	0.088	0.074	0.060	0.046	0.033	–
• for 5-pole systems (N) in the event of a fault to EN 60439-2 Appendix N	Resistance	R'_F	mΩ/m	0.149	0.133	0.117	0.101	0.085	0.069	0.053	0.037	0.021	–
	Reactance	X'_F	mΩ/m	0.129	0.118	0.107	0.096	0.085	0.074	0.063	0.052	0.042	–
	Impedance	Z'_F	mΩ/m	0.197	0.177	0.158	0.139	0.120	0.101	0.082	0.063	0.046	–
Zero impedance													
• for 5-pole systems (PE) to IEC 909, DIN VDE 0102	Resistance	R'_0	mΩ/m	0.203	0.183	0.162	0.142	0.120	0.100	0.079	0.059	0.038	–
	Reactance	X'_0	mΩ/m	0.187	0.171	0.155	0.139	0.122	0.106	0.090	0.074	0.058	–
	Impedance	Z'_0	mΩ/m	0.276	0.250	0.224	0.198	0.171	0.145	0.119	0.094	0.069	–
• for 5-pole systems (N) to IEC 909, DIN VDE 0102	Resistance	R'_0	mΩ/m	0.293	0.262	0.230	0.199	0.168	0.137	0.105	0.074	0.043	–
	Reactance	X'_0	mΩ/m	0.177	0.162	0.146	0.131	0.115	0.100	0.084	0.069	0.053	–
	Impedance	Z'_0	mΩ/m	0.342	0.308	0.272	0.238	0.203	0.169	0.134	0.101	0.068	–
Short-circuit rating													
Rated short-time withstand current													
• for phase conductors	rms value t = 1 s	I_{CW}	kA	38	50	57	60	75	86	100	150	150	–
• for neutral conductor	rms value t = 1 s	I_{CW}	kA	23	30	34	36	45	51	60	70	70	–
• of the 5th conductor	rms value t = 1 s	I_{CW}	kA	23	30	34	36	45	51	60	70	70	–
Rated impulse withstand current	Peak value	I_{PK}	kA	80	110	125	132	165	189	220	255	255	–
Conductor material				Copper									
Number of busbars				5	5	5	5	5	5	5	10	10	–
Conductor cross-section	L1, L2, L3		mm^2	292	386	442	586	712	1192	1586	1892	2384	–
	N		mm^2	292	386	442	586	712	1192	1586	1892	2384	–
Equivalent copper cross-section	PE = Enclosure		mm^2	948	948	1018	1018	1135	1348	1348	2270	2696	–
	+ busbar		mm^2	292	386	442	586	712	1192	1586	1892	2384	–
Combustive energy													
Trunking unit													
• without tap-off point			kWh/m	2.43	2.55	3.02	3.16	4.35	6.66	6.77	9.1	13.6	–
• per tap-off point			kWh	2.9	2.9	2.9	2.9	2.9	2.9	2.9	2.9	2.9	–
Max. fixing intervals													
for normal mechanical load													
• Busbar position: horizontal, edgewise			m	2	2	2	2	3	3	3	3	3	–
• Busbar position: horizontal, flat			m	2	2	2	2	2	2	2	2	2	–
Weights			kg/m	20.7	25.3	28.2	35.2	41.9	66.3	85.5	107.2	133.2	–

LXC..54 busbar trunking units

System-dependent data			LXC	0154	0254	0354	0454	0554	0654	0754	0854	0954	1054
Rated current	IP54/55	I_e	A	1000	1250	1400	1600	2000	2500	3200	4000	5000	–
Conductor impedance													
• at 50 Hz and a busbar temperature of +20 °C	Resistance	R'_{20}	mΩ/m	0.065	0.051	0.044	0.037	0.027	0.017	0.013	0.011	0.009	–
	Reactance	X'_{20}	mΩ/m	0.027	0.031	0.020	0.026	0.013	0.009	0.011	0.008	0.005	–
	Impedance	Z'_{20}	mΩ/m	0.071	0.059	0.048	0.045	0.030	0.019	0.017	0.014	0.010	–
• at 50 Hz and when the busbars have attained operational temperature	Resistance	R'	mΩ/m	0.083	0.065	0.055	0.045	0.035	0.021	0.016	0.014	0.011	–
	Reactance	X'	mΩ/m	0.027	0.031	0.020	0.026	0.013	0.009	0.011	0.008	0.005	–
	Impedance	Z'	mΩ/m	0.087	0.072	0.059	0.051	0.037	0.022	0.019	0.016	0.012	–
• for 5-pole systems (PE) in the event of a fault to EN 60439-2 Appendix N	Resistance	R'_F	mΩ/m	0.116	0.104	0.091	0.079	0.067	0.055	0.043	0.031	0.020	–
	Reactance	X'_F	mΩ/m	0.088	0.081	0.073	0.066	0.058	0.050	0.043	0.035	0.027	–
	Impedance	Z'_F	mΩ/m	0.145	0.131	0.116	0.102	0.088	0.074	0.060	0.046	0.033	–
• for 5-pole systems (N) in the event of a fault to EN 60439-2 Appendix N	Resistance	R'_F	mΩ/m	0.112	0.100	0.088	0.076	0.064	0.052	0.040	0.028	0.016	–
	Reactance	X'_F	mΩ/m	0.129	0.118	0.107	0.096	0.085	0.074	0.063	0.052	0.042	–
	Impedance	Z'_F	mΩ/m	0.170	0.154	0.138	0.122	0.106	0.090	0.074	0.059	0.044	–
Zero impedance													
• for 5-pole systems (PE) to IEC 909, DIN VDE 0102	Resistance	R'_0	mΩ/m	0.203	0.183	0.162	0.142	0.120	0.100	0.079	0.059	0.038	–
	Reactance	X'_0	mΩ/m	0.187	0.171	0.155	0.139	0.122	0.106	0.090	0.074	0.058	–
	Impedance	Z'_0	mΩ/m	0.276	0.250	0.224	0.198	0.171	0.145	0.119	0.094	0.069	–
• for 5-pole systems (N) to IEC 909, DIN VDE 0102	Resistance	R'_0	mΩ/m	0.220	0.197	0.173	0.149	0.126	0.103	0.079	0.056	0.032	–
	Reactance	X'_0	mΩ/m	0.177	0.162	0.146	0.131	0.115	0.100	0.084	0.069	0.053	–
	Impedance	Z'_0	mΩ/m	0.282	0.255	0.226	0.198	0.170	0.143	0.115	0.088	0.061	–
Short-circuit rating													
Rated short-time withstand current													
• for phase conductors	rms value t = 1 s	I_{CW}	kA	38	50	57	60	75	86	100	150	150	–
• for neutral conductor	rms value t = 1 s	I_{CW}	kA	23	30	34	36	45	51	60	70	70	–
• of the 5th conductor	rms value t = 1 s	I_{CW}	kA	23	30	34	36	45	51	60	70	70	–
Rated impulse withstand current	Peak value	I_{PK}	kA	80	110	125	132	165	189	220	255	255	–
Conductor material				Copper									
Number of busbars				6	6	6	6	6	6	6	12	12	–
Conductor cross-section	L1, L2, L3		mm^2	292	386	442	586	712	1192	1586	1892	2384	–
	N		mm^2	584	772	884	1172	1424	2384	3172	3784	4768	–
Equivalent copper cross-section	PE = Enclosure		mm^2	948	948	1018	1018	1135	1348	1348	2270	2696	–
	+ busbar		mm^2	292	386	442	586	712	1192	1586	1872	2384	–
Combustive energy													
Trunking unit													
• without tap-off point			kWh/m	2.92	3.06	3.63	3.79	5.22	7.99	8.13	10.92	16.32	–
• per tap-off point			kWh	2.9	2.9	2.9	2.9	2.9	2.9	2.9	2.9	2.9	–
Max. fixing intervals													
for normal mechanical load													
• Busbar position: horizontal, edgewise			m	2	2	2	2	3	3	3	3	3	–
• Busbar position: horizontal, flat			m	2	2	2	2	2	2	2	2	2	–
Weights			kg/m	23.5	29	32.4	40.8	48.6	77.5	100.4	125.4	155.9	–

LXC..61 busbar trunking units

System-dependent data			LXC	0161	0261	0361	0461	0561	0661	0761	0861	0961	1061
Rated current	IP54/55	I_e	A	1000	1250	1400	1600	2000	2500	3200	4000	5000	–
Conductor impedance													
• at 50 Hz and a busbar temperature of +20 °C	Resistance	R'_{20}	mΩ/m	0.065	0.051	0.044	0.037	0.027	0.017	0.013	0.011	0.009	–
	Reactance	X'_{20}	mΩ/m	0.027	0.031	0.020	0.026	0.013	0.009	0.011	0.008	0.005	–
	Impedance	Z'_{20}	mΩ/m	0.071	0.059	0.048	0.045	0.030	0.019	0.017	0.014	0.010	–
• at 50 Hz and when the busbars have attained operational temperature	Resistance	R'	mΩ/m	0.083	0.065	0.055	0.045	0.035	0.021	0.016	0.014	0.011	–
	Reactance	X'	mΩ/m	0.027	0.031	0.020	0.026	0.013	0.009	0.011	0.008	0.005	–
	Impedance	Z'	mΩ/m	0.087	0.072	0.059	0.051	0.037	0.022	0.019	0.016	0.012	–
• for 5-pole systems (PE) in the event of a fault to EN 60439-2 Appendix N	Resistance	R'_F	mΩ/m	0.137	0.125	0.113	0.101	0.089	0.077	0.065	0.053	0.041	–
	Reactance	X'_F	mΩ/m	0.092	0.085	0.078	0.070	0.063	0.056	0.049	0.041	0.034	–
	Impedance	Z'_F	mΩ/m	0.165	0.151	0.137	0.122	0.109	0.095	0.081	0.067	0.053	–
• for 5-pole systems (N) in the event of a fault to EN 60439-2 Appendix N	Resistance	R'_F	mΩ/m	0.149	0.133	0.117	0.101	0.085	0.069	0.053	0.037	0.021	–
	Reactance	X'_F	mΩ/m	0.129	0.118	0.107	0.096	0.085	0.074	0.063	0.052	0.042	–
	Impedance	Z'_F	mΩ/m	0.197	0.177	0.158	0.139	0.120	0.101	0.082	0.063	0.046	–
Zero impedance													
• for 5-pole systems (PE) to IEC 909, DIN VDE 0102	Resistance	R'_0	mΩ/m	0.274	0.254	0.233	0.213	0.193	0.172	0.152	0.132	0.111	–
	Reactance	X'_0	mΩ/m	0.207	0.191	0.175	0.160	0.144	0.128	0.113	0.097	0.082	–
	Impedance	Z'_0	mΩ/m	0.343	0.317	0.291	0.266	0.240	0.214	0.189	0.163	0.138	–
• for 5-pole systems (N) to IEC 909, DIN VDE 0102	Resistance	R'_0	mΩ/m	0.293	0.262	0.230	0.199	0.168	0.137	0.105	0.074	0.043	–
	Reactance	X'_0	mΩ/m	0.177	0.162	0.146	0.131	0.115	0.100	0.084	0.069	0.053	–
	Impedance	Z'_0	mΩ/m	0.342	0.308	0.272	0.238	0.203	0.169	0.134	0.101	0.068	–
Short-circuit rating													
Rated short-time withstand current													
• for phase conductors	rms value t = 1 s	I_{CW}	kA	38	50	57	60	75	86	100	150	150	–
• for neutral conductor	rms value t = 1 s	I_{CW}	kA	23	30	34	36	45	51	60	70	70	–
• of the 5th conductor	rms value t = 1 s	I_{CW}	kA	23	30	34	36	45	51	60	70	70	–
Rated impulse withstand current	Peak value	I_{PK}	kA	80	110	125	132	165	189	220	255	255	–
Conductor material				Copper									
Number of busbars				5	5	5	5	5	5	5	10	10	–
Conductor cross-section	L1, L2, L3, (PE)[1]		mm^2	292	386	442	586	712	1192	1586	1892	2384	–
	N		mm^2	292	386	442	586	712	1192	1586	1892	2384	–
Equivalent copper cross-section	PE = Enclosure		mm^2	948	948	1018	1018	1135	1348	1348	2270	2696	–
Combustive energy													
Trunking unit													
• without tap-off point			kWh/m	2.43	2.55	3.02	3.16	4.35	6.66	6.77	9.1	13.6	–
• per tap-off point			kWh	2.9	2.9	2.9	2.9	2.9	2.9	2.9	2.9	2.9	–
Max. fixing intervals													
for normal mechanical load													
• Busbar position: horizontal, edgewise			m	2	2	2	2	3	3	3	3	3	–
• Busbar position: horizontal, flat			m	2	2	2	2	2	2	2	2	2	–
Weights			kg/m	20.7	25.3	28.2	35.2	41.9	66.3	85.5	107.2	133.2	–

1) Insulated PE conductor

LXA..62 busbar trunking units

System-dependent data				LXC	0162	0262	0362	0462	0562	0662	0762	0862	0962	1062
Rated current	IP54/55	I_e	A		1000	1250	1400	1600	2000	2500	3200	4000	5000	–
Conductor impedance														
• at 50 Hz and a busbar temperature of +20 °C	Resistance	R'_{20}	mΩ/m		0.065	0.051	0.044	0.037	0.027	0.017	0.013	0.011	0.009	–
	Reactance	X'_{20}	mΩ/m		0.027	0.031	0.020	0.026	0.013	0.009	0.011	0.008	0.005	–
	Impedance	Z'_{20}	mΩ/m		0.071	0.059	0.048	0.045	0.030	0.019	0.017	0.014	0.010	–
• at 50 Hz and when the busbars have attained operational temperature	Resistance	R'	mΩ/m		0.083	0.065	0.055	0.045	0.035	0.021	0.016	0.014	0.011	–
	Reactance	X'	mΩ/m		0.027	0.031	0.020	0.026	0.013	0.009	0.011	0.008	0.005	–
	Impedance	Z'	mΩ/m		0.087	0.072	0.059	0.051	0.037	0.022	0.019	0.016	0.012	–
• for 5-pole systems (PE) in the event of a fault to EN 60439-2 Appendix N	Resistance	R'_F	mΩ/m		0.137	0.125	0.113	0.101	0.089	0.077	0.065	0.053	0.041	–
	Reactance	X'_F	mΩ/m		0.092	0.085	0.078	0.070	0.063	0.056	0.049	0.041	0.034	–
	Impedance	Z'_F	mΩ/m		0.165	0.151	0.137	0.122	0.109	0.095	0.081	0.067	0.053	–
• for 5-pole systems (N) in the event of a fault to EN 60439-2 Appendix N	Resistance	R'_F	mΩ/m		0.112	0.100	0.088	0.076	0.064	0.052	0.040	0.028	0.016	–
	Reactance	X'_F	mΩ/m		0.129	0.118	0.107	0.096	0.085	0.074	0.063	0.052	0.042	–
	Impedance	Z'_F	mΩ/m		0.170	0.154	0.138	0.122	0.106	0.090	0.074	0.059	0.044	–
Zero impedance														
• for 5-pole systems (PE) to IEC 909, DIN VDE 0102	Resistance	R'_0	mΩ/m		0.274	0.254	0.233	0.213	0.193	0.172	0.152	0.132	0.111	–
	Reactance	X'_0	mΩ/m		0.207	0.191	0.175	0.160	0.144	0.128	0.113	0.097	0.082	–
	Impedance	Z'_0	mΩ/m		0.343	0.317	0.291	0.266	0.240	0.214	0.189	0.163	0.138	–
• for 5-pole systems (N) to IEC 909, DIN VDE 0102	Resistance	R'_0	mΩ/m		0.220	0.197	0.173	0.149	0.126	0.103	0.079	0.056	0.032	–
	Reactance	X'_0	mΩ/m		0.177	0.162	0.146	0.131	0.115	0.100	0.084	0.069	0.053	–
	Impedance	Z'_0	mΩ/m		0.282	0.255	0.226	0.198	0.170	0.143	0.115	0.088	0.061	–
Short-circuit rating														
Rated short-time withstand current														
• for phase conductors	rms value t = 1 s	I_{CW}	kA		38	50	57	60	75	86	100	150	150	–
• for neutral conductor	rms value t = 1 s	I_{CW}	kA		23	30	34	36	45	51	60	70	70	–
• of the 5th conductor	rms value t = 1 s	I_{CW}	kA		23	30	34	36	45	51	60	70	70	–
Rated impulse withstand current	Peak value	I_{PK}	kA		80	110	125	132	165	189	220	255	255	–
Conductor material					Copper									
Number of busbars					6	6	6	6	6	6	6	12	12	–
Conductor cross-section	L1, L2, L3, (PE)[1]		mm^2		292	386	442	586	712	1192	1586	1892	2384	–
	N		mm^2		584	772	884	1172	1424	2384	3172	3784	4768	–
Equivalent copper cross-section	PE = Enclosure		mm^2		948	948	1018	1018	1135	1348	1348	2270	2696	–
Combustive energy														
Trunking unit														
• without tap-off point			kWh/m		2.92	3.06	3.63	3.79	5.22	7.99	8.13	10.92	16.32	–
• per tap-off point			kWh		2.9	2.9	2.9	2.9	2.9	2.9	2.9	2.9	2.9	–
Max. fixing intervals														
for normal mechanical load														
• Busbar position: horizontal, edgewise			m		2	2	2	2	3	3	3	3	3	–
• Busbar position: horizontal, flat			m		2	2	2	2	2	2	2	2	2	–
Weights			kg/m		23.5	29	32.4	40.8	48.6	77.5	100.4	125.4	155.9	–

1) Insulated PE conductor

Tap-off units circuit-breaker 3VL

Size 1: (50 A to 250 A)
with circuit breaker 3VL

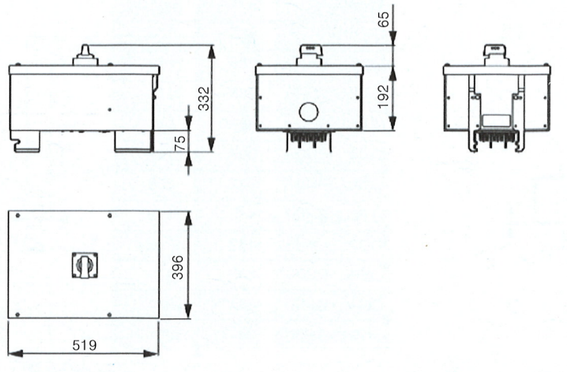

Size 2: (315 A to 630 A)
with circuit breaker 3VL

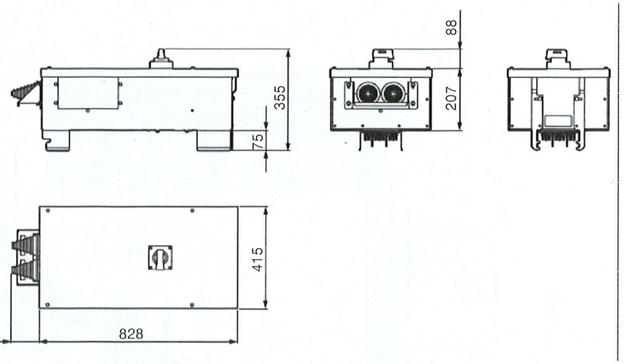

Size 3: (800 A to 1250 A)

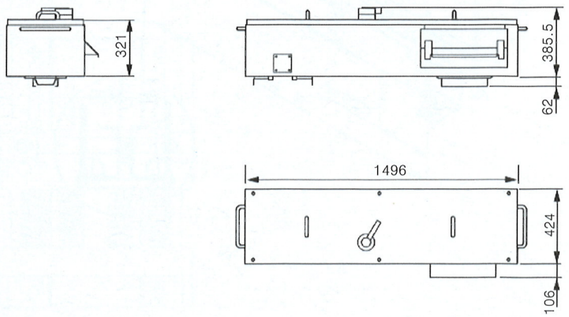

Fixing accessories

Fixing bracket[1)]
for horizontal busbar runs

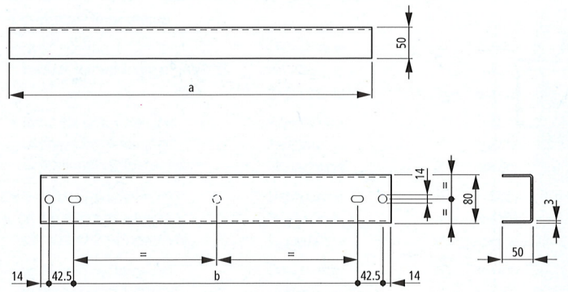

Type	a	b
LX–BH(F)	285	172
LX01..–BH(F)	285	172
LX02..–BH(F)	285	172
LX03..–BH(F)	307	194
LX04..–BH(F)	307	194
LX05..–BH(F)	362	239
LX06..–BH(F)	432	319
LX07..–BH(F)	432	319
LX08..–BH(F)	584	471
LX09..–BH(F)	744	631
LX10..–BH(F)	744	631

Mounting
The busbar run is secured with special fixing brackets (LX–BH, LX..–BF or LXK) that enable the busbar run to "slide" when it expands during operation.
You can find the fixing distance in Chapter "LXA/LXC busbar trunking systems" –Technical data. It is necessary here for each trunking unit to be supported at least once with a fixing bracket.

Fixing distances
– Max. Distance between two fixing points on the trunking unit
– Minimum distance between fixing point and centre of joint block.

System size	Max. Fixing distance [m]
LX.01 to LX.04	2
LX.05 to LX.10	3

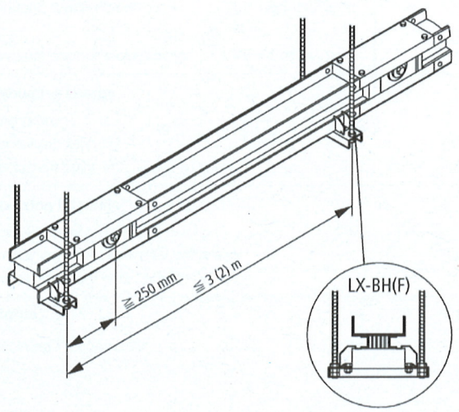

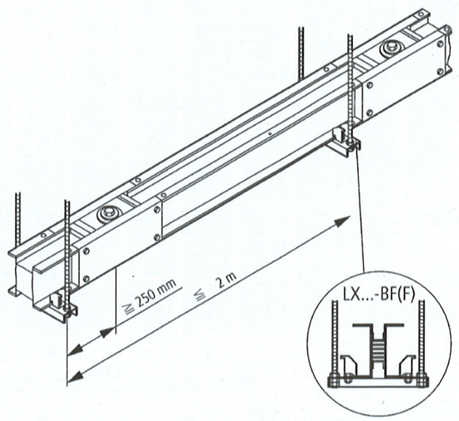

1) LX-K clamping brackets are supplied with the fixing bracket

Fixing accessories

Clamp bracket
For fastening on beam/trays

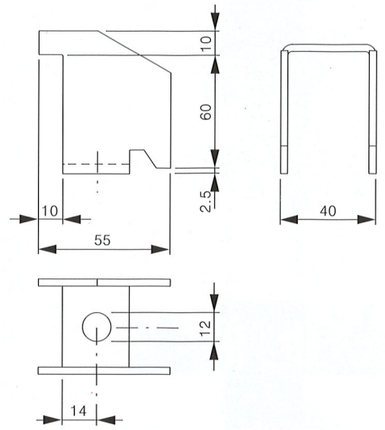

LX–K

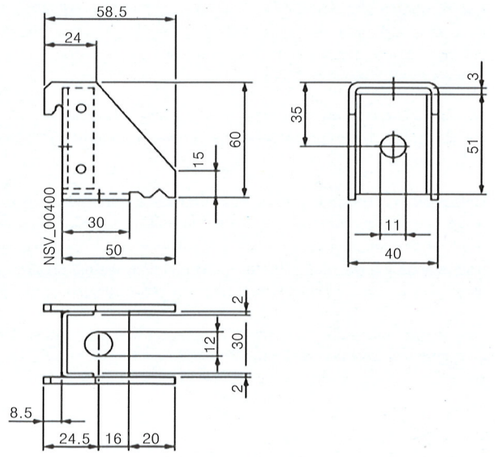

LX–KF

Fixing bracket
for vertical busbar runs

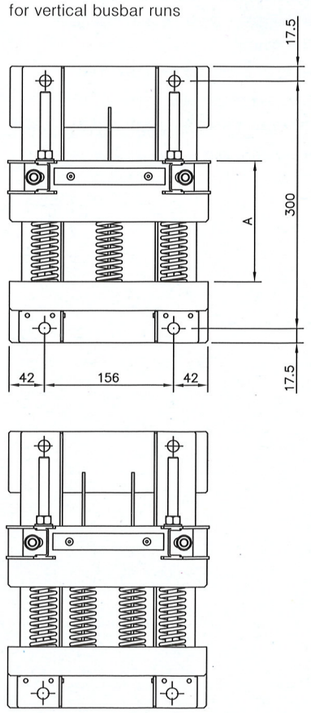

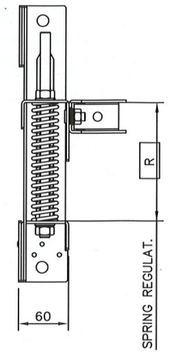

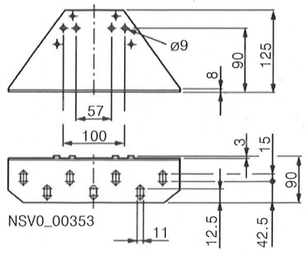

LX–BV1FP1(2)

General comments

German state building codes prescribe that buildings must be designed in such away that "fire and smoke are prevented from starting and spreading and that if there is a fire, effective fire-fighting and the saving of human and animal life is possible". Accordingly, no fire or smoke fumes are permitted to travel from one storey or fire section to another.

All LXA/LXC busbar systems can be fitted with a fire barrier and will thereby satisfy the requirements applicable to buildings, including high-rises.

Unlike cable installations, LX busbar systems come ready-fitted with a fire barrier. Retrofitting is also possible so that adaptions can be made to the requirements on site. A general supervisory authority approval by the Deutsche Institut für Bautechnik in Berlin (DiBt: German Institute for Construction Engineering) has been obtained.

The fire barrier meets the requirements of EN 60439-2 (draft) and of fire resistance class S120 to DIN 4102 Part 9. The picture illustrates the requirements met by the LX busbar trunking system.

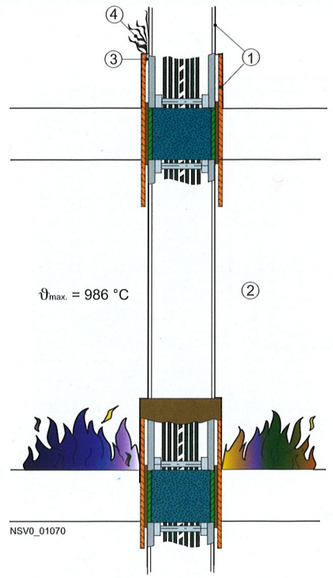

① Permitted temperature increase at components: max.180 °C
② Scene of fire: Application of fire in accordance with standard temperature curve DIN 4102, Sheet 2
③ Permitted temperature increase of escaping air: max. 140 °C
④ No flammable gases are permitted to escape.
No fumes which would hinder rescue work are permitted to escape.

Cut-outs

Recommended dimensions of ceiling or wall cut-out:

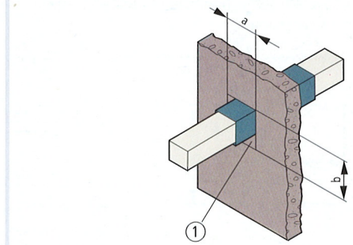

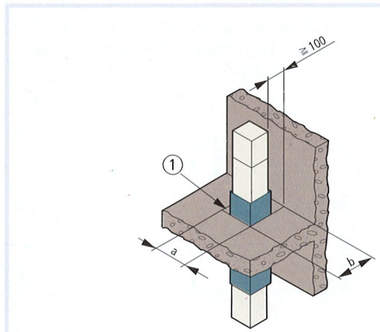

1) The space between the busbar trunking wall and wall cut-out must be filled with mortar or fireproof material. This must comply with the applicable regulations for conformity to fire resistance class S90/S120.

Dimensions of ceiling or wall cut-out:

	a cm	b cm
LX.1	43	42
LX.2	43	42
LX.3	43	45
LX.4	43	45
LX.5	43	49
LX.6	43	57
LX.7	43	57
LX.8	43	72
LX.9	43	88
LX.10	43	88

Further Information

Aids for planning trunking layout

Space requirements with horizontal installation

To ensure straightforward and uncomplicated installation of the trunking units and tap-off units your design work should take into consideration the recommended minimum distances from building components.

LX busbar trunking without tap-off units

Minimum dimensions for busbar trunking systems without tap-off units:

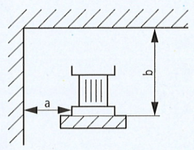

LX busbar trunking with tap-off units

Minimum dimensions for busbar trunking systems with tap-off units:

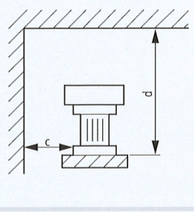

System	Dimension a cm	Dimension b cm	Dimension c cm	Dimension d cm
LX.01..	10	24	38	123
LX.02..	10	24	38	123
LXC03.	10	27	38	126
LX.04..	10	27	38	126
LX.05..	10	31	38	130
LX.06..	10	39	38	138
LX.07..	10	39	38	138
LX.08..	10	54	38	153
LX.09..	10	70	38	169
LXA10.	10	70	38	169

Space requirements with vertical installation

LX busbar trunking without tap-off units

Minimum dimensions for busbar trunking systems without tap-off units. The dimensions of system fixing brackets not shown in the diagram have been taken into account.

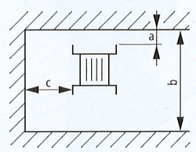

LX busbar trunking with tap-off units

Minimum dimensions for busbar trunking systems with tap-off units. The dimensions of system fixing brackets not shown in the diagram have been taken into account.

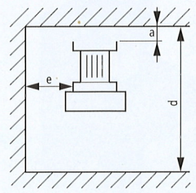

System	Dimension a[1] cm	Dimension b cm	Dimension c cm	Dimension d cm	Dimension e cm
LX.01..	10	27	15	133	38
LX.02..	10	27	15	133	38
LXC03.	10	30	15	136	38
LX.04..	10	30	15	136	38
LX.05..	10	34	15	140	38
LX.06..	10	42	15	148	38
LX.07..	10	42	15	148	38
LX.08..	10	57	15	163	38
LX.09..	10	73	15	179	38
LXA10.	10	73	15	179	38

[1] Distance from wall depends on the fixing bracket