PowerCraft
Emergency Lighting Solutions

ECL - LED Range

- LED load.
- Suitable for a wide range LED load voltage range.
- Extra low standby power consumption.
- Low-profile casing (22mm x 28mm cross-section).
- Regulated charger output.
- Available for 2 hours / 3 hours.
- High Temperature, 70°C NiCd battery(NiMH available on request).

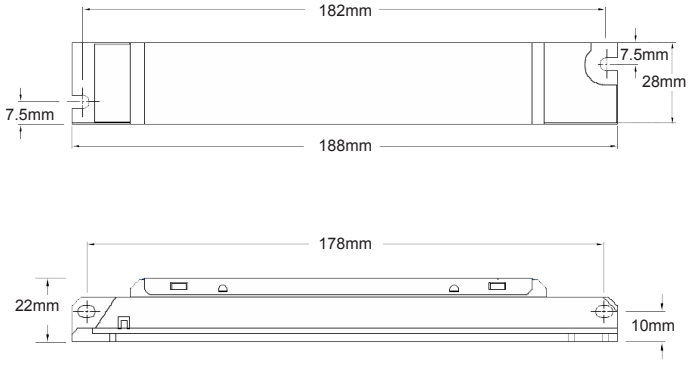



Model Number :	ECL-LED1	ECL-LED2
Mode of Operation :	Maintained / Non-maintained	
Lamp Type :	3 - 70V LED load	
Emergency Mode Duration :	2 Hours / 3 Hours	2 hours
Supply Voltage:	220-240 Volts, 50 - 60Hz	
Supply Current :	20mA	40mA
Power Consumption :	< 2.0W	< 4.0W
Trickle Charge :	80mA / 125mA	125mA / 225mA
Battery Charger :	Regulated variable rate	
Battery Charging Time :	< 24 Hours	
Battery Protection:	Low Battery Voltage Cut-off (Prevents Battery Over Discharge)	
Battery Type :	High Temperature Nickel-Cadmium (NiCd)	
Mains Monitor :	LED	
Test Facility:	Momentary test switch	
Casing Construction :	Electro-galvanised steel	
Max. Casing Temp, Tc :	70°C	
Max. Ambient Temp, Tc :	50°C	
Approvals Standard :	-IEC 61347-2-7 (SS 490-2-7), IEC 61347-2-13, IEC 62384, SS 563	

F

CLASS I

TÜV SÜD
PSB Singapore

Type and batch tested with
PSB PLS-LISTED LABEL

Ordering Guide:

Ordering Code	Battery Type	Battery configuration
ECL-LED1 / 240 / 3.6 / 1.6 - A	NiCd 3.6V 1.6AH	Cane
ECL-LED1 / 240 / 3.6 / 1.6 - S	NiCd 3.6V 1.6AH	Side by side
ECL-LED1 / 240 / 3.6 / 2.5 - A	NiCd 3.6V 2.5AH	Cane
ECL-LED1 / 240 / 3.6 / 2.5 - S	NiCd 3.6V 2.5AH	Side by side
ECL-LED2 / 240 / 4.8 / 2.5 - A	NiCd 4.8V 2.5Ah	Cane
ECL-LED2 / 240 / 4.8 / 2.5 - S	NiCd 4.8V 2.5Ah	Side by side
ECL-LED2 / 240 / 4.8 / 4.5 - A	NiCd 4.8V 4.5Ah	Cane
ECL-LED2 / 240 / 4.8 / 4.5 - A+A	NiCd 4.8V 4.5Ah	Cane + Cane

Note: Technical specifications subject to change without prior notice