ECL - Low Profile Range

- Suitable for T5, T8, CFL and 2D fluorescent lamps.
- Extra low standby power consumption.
- Low-profile casing (22mm x 28mm cross-section).
- Five-pole relay configuration.
- Ballast control output ensures compatability with most high frequency ballast.
- Short-circuit protection.

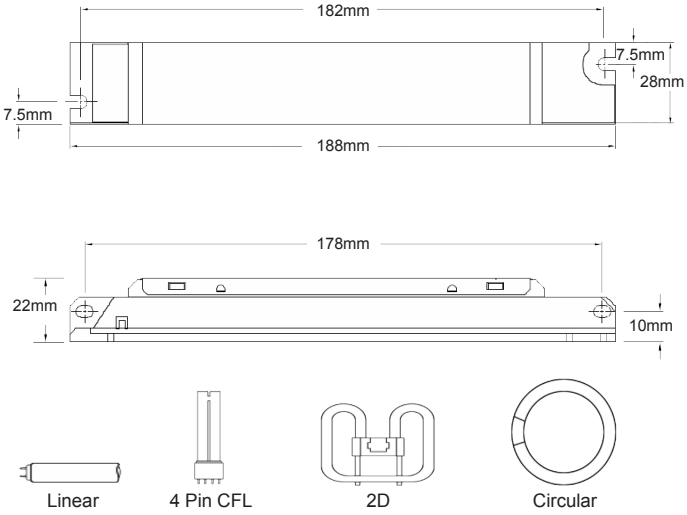



TECHNICAL SPECIFICATIONS

Mode of Operation :	Maintained / Non-maintained
Lamp Type :	T5, T8, 4 Pin CFL and 2D Fluorescent Lamps
Rated Duration :	1 Hour / 2 Hours / 3 Hours
Supply Voltage :	220 - 240V, 50 - 60Hz (110 - 240V on request)
Supply Current	20mA
Power Consumption :	< 2.0W
Trickle Charge :	80mA / 125mA / 225mA
Battery Charger :	Regulated variable rate
Battery Charging Time :	< 24 Hours
Battery Protection :	Low Battery Voltage Cut-off (Prevents Battery Over Discharge)
Battery Type :	High Temp Nickel-Cadmium (NiCd) / Nickel-Metal Hydride (NiMH)
Charge Monitor :	LED
Test Facility :	Momentary test switch
Casing Construction :	Electro-galvanised steel
Max. Casing Temp, Tc :	70°C
Max. Ambient Temp, Ta :	50°C
Approvals Standards :	IEC 61347-2-7 (SS 490-2-7), SS 563

F

CLASS I

TÜV SÜD
PSB Singapore

Type and batch tested with
PSB PLS-LISTED LABEL

Ordering Guide:

Ordering Code	Battery Type	Battery configuration
ECL1 / 240 / 3.6 / 2.5 - A	NiCd 3.6V 2.5AH	Cane
ECL1 / 240 / 3.6 / 1.6 - S	NiCd 3.6V 1.6AH	Side by side
ECL2 / 240 / 4.8 / 1.3 - S	NiMH 4.8V 1.3AH	Side by side
ECL2 / 240 / 4.8 / 1.6 - A	NiCd 4.8V 1.6AH	Cane
ECL2 / 240 / 4.8 / 1.6 - S	NiCd 4.8V 1.6AH	Side by side
ECL2 / 240 / 4.8 / 2.5 - A	NiCd 4.8V 2.5AH	Cane
ECL2 / 240 / 4.8 / 2.5 - S	NiCd 4.8V 2.5AH	Side by side
ECL4 / 240 / 4.8 / 4.5 - A	NiCd 4.8V 4.5AH	Cane
ECL4 / 240 / 4.8 / 4.5 - A+A	NiCd 4.8V 4.5AH	Cane + cane
ECL2 / 120-240 / 4.8 / 2.5 - A	NiCd 4.8V 2.5AH	Cane
ECL2 / 120-240 / 4.8 / 2.5 - S	NiCd 4.8V 2.5AH	Side by side

Note: Technical specifications subject to change without prior notice