LED Bulkhead

- Weatherproof design suitable for indoor and outdoor applications.
- Fire Retardant (UL94) housing and UV stabilised Diffuser.
- Low heat generation, ensures longer and reliable service life.
- Low battery voltage cut-off with latch function, to eliminate battery over discharge.
- Charge LED indicator and test switch.

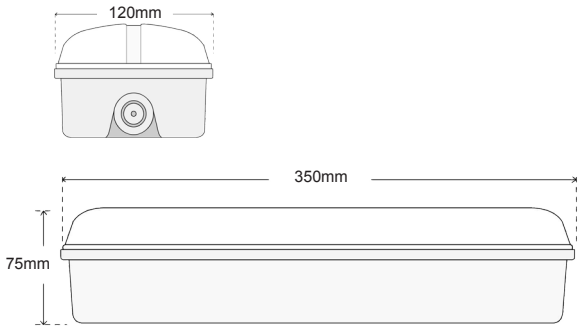



TECHNICAL SPECIFICATIONS

Model Number :	EL-LED2-NM
Mode of Operation :	Non maintained
Lamp :	2 x 3.6V / 1A power LED module
Rated Duration :	2 Hours (3 Hours on request)
Mains Supply :	220-240 Volts
Mains Frequency :	50-60Hz
Power Consumption :	< 1.5W
Battery :	High Temperature Nickel Cadmium
Charger :	Regulated variable rate, Short circuit protected
Charge Monitor :	LED
Degree of protection (Against dust and moisture)	IP54 (IP65 with Test Switch mounted internally)
Test Facility :	Momentary test switch
Safety Features :	Low battery voltage cut off to prevent over discharge
Recharge Period :	< 24 Hours
Fitting Construction :	Injection moulded with fire retardant (UL94), high impact material
Weight :	Approximately 1.0 Kg
Dimensions :	350mm (W) x 120mm (H) x 75mm (D)
Standards / Compliance :	IEC 60598-2-22 ,SS 263 Part 2, SS 563
Approvals :	PSB Type test, PSB PLS (Product Listing Scheme)

F

IP65

CLASS II

TÜV SÜD
PSB Singapore

Type and batch tested with
PSB PLS-LISTED LABEL

Note: Technical specifications subject to change without prior notice