Slimline LED

- Ultra bright white LEDs meeting ISO safety colour requirements.
- Exceeds IEC 60598-2-22 and SS 563 brightness requirements.
- Extra low power consumption.
- High Quality, Long Life SMD LED module.
- High efficiency charger and LED converter.
- Series connection of LEDs provides equal biasing of all LEDs ensures maximum LED life span and uniform light distribution.
- Add-on plate for recess mounting
- Low battery voltage cut-off with latch function, to eliminate battery over discharge.
- Charge indicator and test switch.

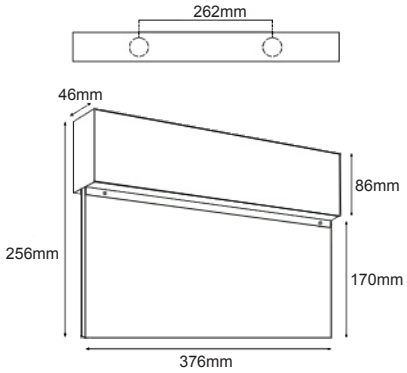



TECHNICAL SPECIFICATIONS

Model Number :	EX-LED-M
Mode of Operation :	Maintained
Lamp :	1.2W White LED module with burning life-span > 50,000 hours
Rated Duration :	3 Hours
Mains Supply :	220-240 Volts
Mains Frequency :	50-60Hz
Power Consumption :	3W (Total standby power inclusive of LED converter)
Battery :	High Temperature Nickel Cadmium
Charger :	Regulated variable rate
Charge Monitor :	LED
Test Facility :	Micro switch
Mounting :	Surface mount (Recessed mount option available)
Safety Features :	Low battery voltage cut off to prevent over discharge
Recharge Period :	< 24 Hours
Diffuser :	Acrylic plate (Fire retardant)
Fitting Construction :	Electro galvanized steel. Epoxy powder coating for casing and gear tray
Weight :	Approximately 2.1 Kg
Dimensions :	256mm (H) x 376mm (W) x 46mm (D)
Standards / Compliance :	IEC 60598-2-22, SS 263 Part 2, SS 563
Approvals :	TÜV SÜD PSB, PSB PLS (Product Listing Scheme)

F

CLASS I

TÜV SÜD
PSB Singapore

Type and batch tested with
PSB PLS-LISTED LABEL

Ordering Guide:

Legend	Single Sided	Double Sided
	EX-LED-M-S-RM	EX-LED-M-D-RM
	EX-LED-M-SR-RM	EX-LED-M-DR-RM
	EX-LED-M-SL-RM	EX-LED-M-DL-RM
	EX-LED-M-S	EX-LED-M-D
	EX-LED-M-SR	EX-LED-M-DR
	EX-LED-M-SL	EX-LED-M-DL

Note: Technical specifications subject to change without prior notice