MEP BIM EXECUTION PLAN

FOR

"Project name"

DRAFT

Copyright @ 2015 Alpha Consulting Engineers Pte Ltd

Table of Contents

Revision Schedule 3
Section A: Overview 4
Section B: Project Information 5
Section C: Goals/Objectives 7
Section D: BIM Deliverables 8
Section E: BIM Uses 11
Section F: Collaborative Working 12
Section G: Quality Control 15

DRAFT

Copyright @ 2015 Alpha Consulting Engineers Pte Ltd

Revision Schedule

Item	Date of Issue	Amendments			Remarks
		Section	Revision	Page(s)	

DRAFT

Copyright @ 2015 Alpha Consulting Engineers Pte Ltd

Section A: Overview

This MEP BIM Execution Plan (BEP) is developed for "project name and address".

The intent of this MEP BEP is to provide a framework that will let the Owner, Architect, Engineers and Contractors deploy BIM technology and best practices on the MEP services for this project faster and more cost-efficiently.

The MEP BEP defines the scope of BIM implementation, processes and tasks assigned to the participating members of the Project.

The main objectives are:

- To understand the strategic goals for the MEP BIM implementation for the project.
- To assign and clarify the roles and responsibility of the MEP Project Team members.
- To develop a process for creation of the various models required for the completion of the project.
- To provide a baseline for progress monitoring and timeline by which these models shall be procured.

The MEP BEP document remains a live document throughout the life of the project, reviewed regularly and updated when necessary.

DRAFT

Project BIM Manager _____ Date _____

MEP BIM Coordinator _____ Date _____

Copyright @ 2015 Alpha Consulting Engineers Pte Ltd

Section B: Project Information

B.1) Project Description:

Project Owner	
Project Name	
Brief Project Description	
Project Location & Address	

B.2) Project Scope:

Project Phasing	
Approximate Site Area	
Approximate Gross Internal Floor Area	
Contract / Delivery Type	

B.3) Unique Project Challenges:

Identify any unique project conditions / challenges which may influence the approach to the project design / delivery.
For example:
- Steep sided site topography.
- Limited access route widths.
- Congested city centre location.

B.4) Key Project Members:

Contact Name	Role/Designation	Discipline	Company	Email	Phone
	Project Manager/Director	Client's Representative			
	BIM Manager/Design Manager	Architecture			
	BIM Coordinator/Civil Engineer	Civil			
	BIM Coordinator/ Structural Engineer	Structure			
	BIM Coordinator/ MEP Engineer	MEP			
	Quantity Surveyor/ Exec. QS	QS			

DRAFT

Copyright @ 2015 Alpha Consulting Engineers Pte Ltd

B.5) Project Phases/Milestone:

Project Phases/Milestone	Estimated Start Date	Estimated Completion Date	Project Members Involved

B.6) MEP BIM Coordinator Role & Responsibilities:

Role	Responsibilities
MEP BIM Coordinator	• Develop the 3D MEP services & generate 2D documents for construction. • Coordinate changes with other disciplines in the Project for BIM related issues. • Maintain the MEP BEP document. • Participate in Design Review and Model Coordination. • Manage and update the Revit Model(s) through the end of the construction phase, incorporating all updates and/or revisions to the model(s) as necessary to reflect design changes initiated by ASI, RFI, Owner Changes, or coordination with existing conditions. • Implement MEP BEP to the MEP Team. • Manage the MEP BIM workflow and standards. • Manage the MEP BIM project template and shared parameters. • Manage MEP quality control and auditing. • Validate Level of Details and controls. • Export models to required formats as required by the Project BIM Manager. • Manage server files and folders.

DRAFT

Copyright @ 2015 Alpha Consulting Engineers Pte Ltd

Section C: Goals/Objectives

C.1) MEP Project Goals/Objectives:

Project Goal/Objective	Description
Visualisation	Better visual representation of the project. The BIM Model will be utilised to convey the design to the Project Team. This should be of particular benefit to the Client in visualizing and understanding the design during the early phases of the project. More effective and productive communication between the Project Team.
Sustainable Documentation	Project Members will be able to capture sustainable documentation from the BIM model. Proper documentation or records can be kept for the project.
Coordination	Coordination between different disciplines can be done and managed with ease. Clash detection can be review and rectified early. Effective communication of the design with key stakeholders in the design phase. Usual time spent to coordinate in technical/site meetings will be shortened.
Cost Estimation	Cost estimates information for various components can be retrieved directly from the BIM model. The BIM Model may be utilised for verification of manual take-off quantities.
Quantity of materials, equipment, etc.	Detailed quantities of various components can be retrieved & verified directly from the BIM model. Information can be used for future asset management, space planning and facility management.
As-Built	Accurate as-built drawings/documents can be produced.

DRAFT

Copyright @ 2015 Alpha Consulting Engineers Pte Ltd

Section D: BIM Deliverables

D.1) MEP BIM Deliverables:

Item	Description	File Format	Due Date	Project Stage	Remarks
Schematic Design Development	Preliminary/concept MEP systems, Equipment layout, Load information	2D DWG, PDF		Schematic/ Preliminary Design	Provide full set of drawings for all MEP disciplines
Design Development	Detailed design plans, sections, elevations, equipment schedules, standard details/installations	RVT, DWF, PDF		Detailed Design	Provide full set of drawings in DWF, PDF & RVT 3D model
Coordinated MEP Model	Model of MEP disciplines with accurate quantity, size, shape, location & orientation. No major clashes between MEP sub-disciplines models. No major clashes between MEP & architectural model. No major clashes between MEP & structural model.	RVT, DWF, PDF		Detailed Design	Provide full set of drawings in DWF, PDF & RVT 3D model

Excluded from the MEP BIM Deliverables:

- Details of MEP services mounting assemblies
- Specialised systems and equipment
- MEP equipment vibration assemblies
- Electrical conduits & cables
- Telecommunication conduits & cables
- Access panels for MEP equipment
- Wall/floor openings for MEP services
- Pipe sleeves for MEP services
- Electrical earthing protection for MEP equipment and devices
- As-built equipment and assemblies
- Construction equipment and assemblies

DRAFT

Copyright @ 2015 Alpha Consulting Engineers Pte Ltd

D.2) Definition of Level of Detail (LOD):

LOD	Definition	Project Stage
100	The Model Element may be graphically represented in the Model with a symbol or other generic representation. Model will be presented in 2D.	Schematic/Preliminary Design
200	The Model Element is graphically represented within the Model as a generic system, object or assembly with approximate quantities, size, shape, location, and orientation. Non-graphic Information may also be attached to the Model Element. Model will be presented in 3D.	Detail Design
300	The Model Element is graphically represented within the Model as a generic system, object or assembly with approximate quantities, size, shape, location, and orientation. Non-graphic Information may also be attached to the Model Element. The Model will have all of the necessary elements and information required to produce Tender drawings and documents. Model will be presented in 3D.	Detail Design

DRAFT

Copyright @ 2015 Alpha Consulting Engineers Pte Ltd

D.3) LOD for MEP Disciplines:

MEP Service	Element	Schematic/ Preliminary Design	Detail design	
Air Conditioning & Mechanical Ventilation Installation	Ductwork & fittings	100	200	300
	Air terminal	100	200	300
	Dampers	100	200	300
	Equipment	100	200	300
	Pipework & fittings	100	200	300
Electrical Installation	Power Distribution equipment	100	200	300
	Cable support system	100	200	300
	Lighting system	100	200	300
	Power & Ancillary system	100	200	300
	ELV	100	200	300
	Lightning Protection	100	200	300
Fire Fighting & Alarm Installation	Pipework & fittings	100	200	300
	Equipment	100	200	300
	Automatic Fire Sprinkler system	100	200	300
	Automatic Fire Alarm system	100	200	300
	Wet & Dry Riser system	100	200	300
	Hydrant system	100	200	300
	Hosereel system	100	200	300
Plumbing, Sanitary & Gas Installation	Pipework, fixtures & fittings	100	200	300
	Equipment	100	200	300

DRAFT

Copyright @ 2015 Alpha Consulting Engineers Pte Ltd

Section E: BIM Uses

E.1) MEP BIM Use:

BIM Use	Primary	Secondary
Visualisation, Presentation	☐	☐
Design Authoring	☐	☐
Design Review	☐	☐
Presentation	☐	☐
Preliminary MEP Provisions, space planning	☐	☐
Cost Estimation	☐	☐
3D Coordination	☐	☐
Engineering Analysis	☐	☐
Code Validation	☐	☐
Documentation - Tender/Contract	☐	☐
Authority Submissions	☐	☐
Replying RFIs	☐	☐

DRAFT

Copyright @ 2015 Alpha Consulting Engineers Pte Ltd

Section F: Collaborative Working

F.1) Project BIM Workflow & Processes:

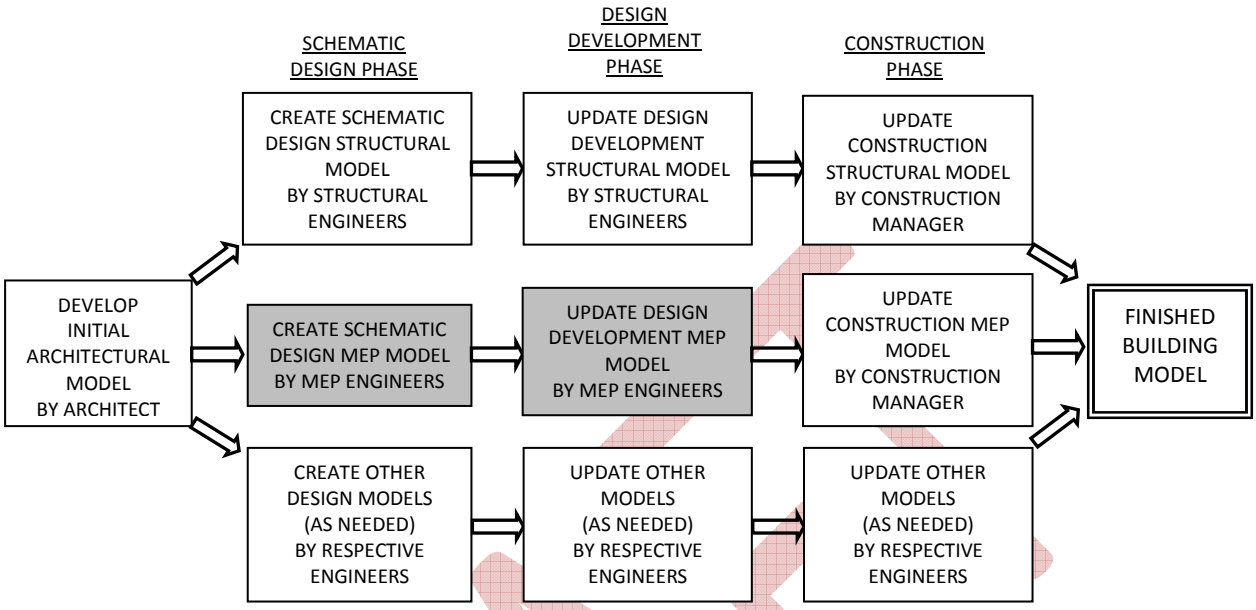

F.2) MEP BIM Workflow & Processes:

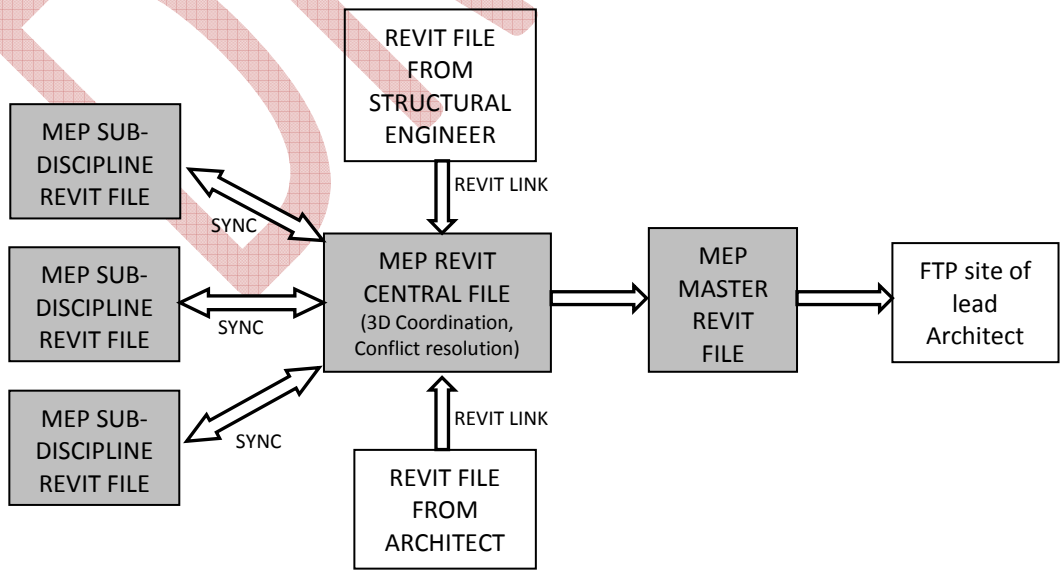

Copyright @ 2015 Alpha Consulting Engineers Pte Ltd

F.3) MEP BIM Standards:

In accordance with the Building Information Modelling (BIM) standards, procedures and methodologies specified in the following:

- BCA Singapore BIM Guide
- BCA BIM Essential Guides
- Singapore Standard CP83
- BIM Manual, Alpha Consulting Engineers Pte Ltd
- Level Of Development Specification, BIMFORUM

F.4) Collaboration meetings:

Meeting Type	Host	Attendees	Required Software
Design Meetings BIM Model Progress/Coordination	Architect / Design Disciplines	Design Team	Autodesk Revit MEP
Design Coordination BIM Model Coordination/Clash Detection	Architect / Design Disciplines	Design Team	Autodesk Revit MEP, Autodesk Navisworks
Design Presentation BIM Model Presentation to Project Team	Architect	Client, Design Team	Autodesk Revit MEP
Construction Coordination BIM Model Coordination/Clash Detection	Construction Manager	Client, Design Team, Construction Team	Autodesk Revit MEP, Autodesk Navisworks
As-Built Coordination As-Built BIM Model Progress/Coordination	Architect / Construction Manager	Client, Design Team, Construction Team	Autodesk Revit MEP, Autodesk Navisworks

Meeting frequency as scheduled by Architect.

DRAFT

Copyright @ 2015 Alpha Consulting Engineers Pte Ltd

F.5) File Sharing Tools:

Project Phase	Discipline	Sharing Platform
Design	All BIM-related files utilized by the Design Team	FTP site of the lead Architect
Construction	All BIM-related files utilized by the Design & Construction Team	FTP site of the lead Architect or the Construction Manager

F.6) MEP File Naming Convention:

Naming Convention	Discipline	Authoring Software
As specified by the BIM Manager (Arch/PM) for the Project OR As specified in ACEPL's BIM Manual	All MEP Services	Autodesk Revit MEP

F.7) MEP BIM Tools:

Use	Software
Design Authoring	Autodesk Revit MEP
Coordination/Clash Detection	Autodesk Navisworks
Analysis, ETTV/RTTV calculations	IES
Model Review	Autodesk Design Review

DRAFT

Copyright @ 2015 Alpha Consulting Engineers Pte Ltd

Section G: Quality Control

G.1) Quality Control Checks:

Checks	Definition	Software	Frequency
Visual check	To ensure there are no unintended model components and the design intent has been followed	Autodesk Revit MEP	Ongoing
Interference check	To detect problems in the model where 2 components are clashing	Autodesk Revit MEP, Autodesk Navisworks	Weekly
Standard check	To ensure BIM and CAD standards have been followed (fonts, levels/layers, dimensions, line styles, etc.)	Autodesk Revit MEP	Ongoing
Design Review/ Model integrity check	To ensure integrity of the model aligns with the BIM Uses and Client's BIM requirements & standards as set out in the Model Standards	Autodesk Revit MEP	Fortnightly

DRAFT

G.2) MEP Model Accuracy & Tolerance:

- The Metric system of measurements will be used for this Project.
- All MEP disciplines to acquire their coordinate system from the Architectural model and should use the shared coordinate system.
- Models should include all appropriate dimensioning as needed for design intent, analysis and construction.

Copyright @ 2015 Alpha Consulting Engineers Pte Ltd

G.3) MEP Model Checklist:

Description	Yes	N.A.
For Tender:		
Model Files are in the accepted format (RVT, DWF or PDF)	☐	☐
Naming of files and drawings as per guidelines/CP83	☐	☐
Drafting conventions, symbols, layers, line types and colors as per CP83	☐	☐
All MEP disciplines acquire their coordinate system from the Architectural model	☐	☐
Correct model scale	☐	☐
Model components belong to the correct system	☐	☐
No excess or overlapping model components	☐	☐
No hidden objects or annotations	☐	☐
No clashes between MEP & Architectural components	☐	☐
No clashes between MEP & Structural components	☐	☐
No clashes between all components of MEP disciplines	☐	☐
All other external references, components, etc. which are not part of the constructed building elements are removed or purged	☐	☐
Remove all links from model. Links to model to be uploaded separately	☐	☐
No proprietary fonts are used for annotations and all fonts are legible	☐	☐
Maximum extent is saved for each drawing view	☐	☐

DRAFT

Copyright @ 2015 Alpha Consulting Engineers Pte Ltd

For E-submission (inclusive of requirements for Tender):		
Model Files are in the accepted format (DWF or PDF)	☐	☐
Submit 2D & 3D models in one file for CBPU, PUB(WRN), PUB(WSN), FSSD and IDA-TFCC	☐	☐
Submit each plan in one file for CityGas	☐	☐
Model file size is limited to 100MB per file, per submission	☐	☐
Linked model file shall be binded as a single integrated BIM	☐	☐
QP's declarations/endorsements	☐	☐
Pre-checked DWF/PDF files before submission	☐	☐

DRAFT

Copyright @ 2015 Alpha Consulting Engineers Pte Ltd