Building and Construction Authority

CODE ON

ENVELOPE THERMAL PERFORMANCE

FOR

BUILDINGS

CONTENTS

		Page
General		
1	Aim	5
2`	Scope	5
3	Background	5
Envelope Thermal Transfer Value (ETTV)		
4	Envelope Thermal Transfer Value (ETTV)	7
5	Envelope Thermal Transfer Value (ETTV) Formula	7
Roof Thermal Transfer Value (RTTV)		
6	Roof Thermal Transfer Value (RTTV)	9
7	Roof Thermal Transfer Value (RTTV) Formula	9
Residential Envelope Transmittance Value (RETV)		
8	Residential Envelope Transmittance Value (RETV)	11
9	Residential Envelope Transmittance Value (RETV) Formula	11
10	Deem-to-Satisfy Criteria for RETV	12
Roof Insulation for Air-conditioned Non-Residential Buildings (without Skylight) and Residential Buildings		
11	Thermal Transmittance of Roof	13
APPENDIX A - Thermal Transmittance (U-Value) Calculation		
A1	Thermo-Physical Properties of Building Materials	
	A.1 Thermal conductivity (k-value)	14
	A.2 Thermal resistivity (r)	14
	A.3 Thermal conductance (C)	14
	A.4 Thermal resistance (R)	14
A2	Thermal Transmittance (U-value)	15
A3	Surface Air Film Resistance	15
A4	Air Space Resistance	16

APPENDIX B - Shading Coefficient of Sun Shading Devices

B1 Basic Solar Data
- B1.1 Solar geometry 18
- B1.2 Shadow angles 18
- B1.3 Intensity of solar radiation 19

B2 Shading Coefficient
- B2.1 Basic concept 20
- B2.2 Method of calculating effective shading coefficient of external sun-shading device 21
- B2.3 Determination of 'G' factor 22

B3 Examples
- B3.1 Example A – finding the effective shading coefficient of a sloping horizontal projection 26
- B3.2 Example B – finding the effective SC of an egg-crate shading device 27
- B3.3 Example C – finding the effective SC of a shading device parallel to the wall 28

B4 Keys for Tables of Effective Shading Coefficient of External Shading Devices
- B4.1 Key 1 – horizontal projections (Tables 11 to 14) 30
- B4.2 Key 2 – vertical projections (Tables 15 to 18) 30
- B4.3 Key 3 – egg-crate louvers (Tables 19 to 22) 30

B5 Examples
- B5.1 Window on South-West facing wall 31
- B5.2 Window on West facing wall 31

APPENDIX C - Schedules of Tables

Table C1 – Solar Correction Factors (CF) for Walls (ETTV) 32

Table C2 – Solar Correction Factors (CF) for Roofs (RETV) 32

Table C3 – Solar Correction Factors (CF) for Walls (RETV) 33

Table C4 – Maximum Thermal Transmittance for Roof of Air-conditioned Building 33

Table C5 – Thermal Conductivity Values (k-Values) of Basic Materials 33

Table C6 – Surface Film Resistances for Walls and Roofs 35

Table C7 – Air Space Resistance for Walls and Roofs 36

Table C8 – Solar data: North & South orientation 37

Table C9 – Solar data: East & West orientation 38

Table C10 – Solar data: North-East & North-West orientation 39

Table C11 – Solar data: South-East & South-West orientation 40

Table C12 – Effective shading coefficients of horizontal projection at various angles of inclination: North & South orientation 41

Table C13 – Effective shading coefficients of horizontal projection at various angles of inclination: East & West orientation 42

Table C14 – Effective shading coefficients of horizontal projection at various angles of inclination: North-East & North-West orientation 43

Table C15 – Effective shading coefficients of horizontal projection at various angles of inclination: South-East & South-West orientation 44

Table C16 – Effective shading coefficients of vertical projection at various angles of inclination: North & South orientation 45

Table C17 – Effective shading coefficients of vertical projection at various angles of inclination: East & West orientation 46

Table C18 – Effective shading coefficients of vertical projection at various angles of inclination: North-East & North-West orientation 47

Table C19 – Effective shading coefficients of vertical projection at various angles of inclination: South-East & South-West orientation 48

Table C20– Effective shading coefficients of egg-crate louvers with inclined horizontal fins: North & South orientation 49

Table C21 – Effective shading coefficients of egg-crate louvers with inclined horizontal fins: East & West orientation 52

Table C22 – Effective shading coefficients of egg-crate louvers with inclined horizontal fins: North-East & North-West orientation 55

Table C23 – Effective shading coefficients of egg-crate louvers with inclined horizontal fins: South-East & South-West orientation 58

APPENDIX D

D1 Example of ETTV Calculation 61

APPENDIX E

E1 Example of RETV Calculation 72

APPENDIX F

F1 Bibliography 83

GENERAL

1 Aim

The aim of this Code is to assist architects and professional engineers to comply with the envelope thermal performance standards prescribed in the Building Regulations.

2 Scope

This Code covers the following Envelope Thermal Performance Standards:

i. Envelope Thermal Transfer Value (ETTV) for air-conditioned non-residential buildings

ii. Roof Thermal Transfer Value (RTTV) for air-conditioned non-residential buildings (with skylight)

iii. Residential Envelope Transmittance Value (RETV) for residential buildings

iv. Roof insulation for air-conditioned non-residential buildings (without skylight) and residential buildings

3 Background

3.1. Since 1979, the Building Control Regulations had prescribed an envelope thermal performance standard know as Overall Thermal Transfer Value (OTTV). The OTTV standard applied only to air-conditioned non-residential buildings.

3.2. A major review of the OTTV formula was carried out in the early 2000 to provide a more accurate measure of the thermal performance of building envelope. The new formula is given the name 'Envelope Thermal Transfer Value' (ETTV) to differentiate it from the original OTTV formula.

3.3. A similar review of the OTTV formula for roof was also conducted and a new formula, known as 'Roof Thermal Transfer Value' (RTTV), replaces the Roof OTTV formula.

3.4. The ETTV requirement does not apply to non air-conditioned buildings such as residential buildings that are designed to be naturally ventilated. However, as it becomes increasingly common for residential buildings to be air-conditioned, there is a need to regulate the design of their envelopes so that heat gain into the interior spaces and hence air-conditioning energy used can be minimised.

3.5. Based on the results of a NUS study commissioned by BCA, the ETTV concept was extended in 2008 to cover residential buildings. As the air-conditioners in residential buildings are usually turned on in the night, the

envelope thermal performance standard for residential buildings is given the name Residential Envelope Transmittance Value (RETV) so as to differentiate it from ETTV, which is meant for buildings that operate the air-conditioning system during the day.

4 Envelope Thermal Transfer Value (ETTV)

4.1 The ETTV takes into account the three basic components of heat gain through the external walls and windows of a building. These are:

heat conduction through opaque walls,
heat conduction through glass windows,
solar radiation through glass windows.

4.2 These three components of heat input are averaged over the whole envelope area of the building to give an ETTV that represents the thermal performance of the whole envelope. For the purpose of energy conservation, the maximum permissible **ETTV has been set at 50 W/m^2**.

5 Envelope Thermal Transfer Value (ETTV) Formula

5.1 The ETTV formula is given as follows:

$$ETTV = 12(1 - WWR)U_w + 3.4(WWR)U_f + 211(WWR)(CF)(SC)$$

where

ETTV	:	envelope thermal transfer value (W/m^2)
WWR	:	window-to-wall ratio (fenestration area / gross area of exterior wall)
U_w	:	thermal transmittance of opaque wall (W/m^2 K)
U_f	:	thermal transmittance of fenestration (W/m^2 K)
CF	:	correction factor for solar heat gain through fenestration
SC	:	shading coefficients of fenestration

5.2 Where more than one type of material and/or fenestration is used, the respective term or terms shall be expanded into sub-elements as shown:

$$ETTV = \frac{12(A_{w1} \times U_{w1} + A_{w2} \times U_{w2} + \ldots + A_{wn} \times U_{wn})}{A_o} + \frac{3.4(A_{f1} \times U_{f1} + A_{f2} \times U_{f2} + \ldots + A_{fn} \times U_{fn})}{A_o} + \frac{211(A_{f1} \times SC_{f1} + A_{f2} \times SC_{f2} + \ldots + A_{fn} \times SC_{fn})(CF)}{A_o}$$

where

A_{w1}, A_{w2}, A_{wn}	:	areas of different opaque wall (m^2)
A_{f1}, A_{f2}, A_{fn}	:	areas of different fenestration (m^2)
A_o	:	gross area of the exterior wall (m^2)
U_{w1}, U_{w2}, U_{wn}	:	thermal transmittances of opaque walls (W/m^2 K)

U_{f1}, U_{f2}, U_{fn} : thermal transmittances of fenestrations ($W/m^2 K$)
SC_{f1}, SC_{f2}, SC_{fn} : shading coefficients of fenestrations
CF : correction factor for solar heat gain through fenestration

5.3 As walls at different orientations receive different amounts of solar radiation, it is necessary in general to first compute the ETTVs of individual walls, then the ETTV of the whole building envelope is obtained by taking the weighted average of these values. To calculate the ETTV for the envelope of the whole building, the following formula shall be used:

$$ETTV = \frac{A_{o1} \times ETTV_1 + A_{o2} \times ETTV_2 + \ldots + A_{on} + ETTV_n}{A_{o1} + A_{o2} + \ldots + A_{on}}$$

where
A_{o1}, A_{o2}, A_{on} : gross areas of the exterior wall for each orientation (m^2)

5.4 The solar correction factors for eight primary orientations of the walls have been determined for the Singapore climate. They are given in Table C1.

5.4.1 If the wall is curved, the eight primary orientations are segmented as follows:

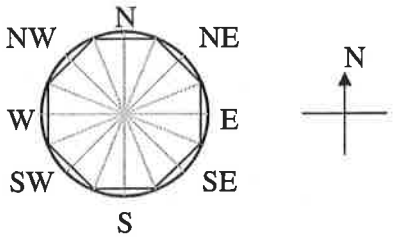

ROOF THERMAL TRANSFER VALUE (RTTV)

6 Roof Thermal Transfer Value (RTTV)

6.1 If the roof of an air-conditioned building is provided with skylight, the ETTV concept is also applicable to its roof. To differentiate between the walls and the roof, the term Roof Thermal Transfer Value (RTTV) is used instead. Similarly, RTTV takes into consideration the three basic components of heat gain through the opaque roof and skylight. These are:

heat conduction through opaque roof,
heat conduction through skylight,
solar radiation through skylight.

6.2 The maximum permissible **RTTV has also been set at 50 W/m^2.**

7 Roof Thermal Transfer Value (RTTV) Formula

7.1 The RTTV formula is given as follows:

$$RTTV = 12.5(1-SKR)U_r + 4.8(SKR)U_s + 485(SKR)(CF)(SC)$$

where

RTTV : roof thermal transfer value (W/m^2)
SKR : skylight ratio of roof (skylight area / gross area of roof)
U_r : thermal transmittance of opaque roof (W/m^2 K)
U_s : thermal transmittance of skylight area (W/m^2 K)
CF : solar correction factor for roof
SC : shading coefficient of skylight portion of the roof

7.2 Similarly, when more than one type of material and or skylight is used, the respective term or terms shall be expanded into sub-elements, such as;

$$RTTV = \frac{12.5(A_{r1}\times U_{r1} + A_{r2}\times U_{r2} + ... + A_{rn}\times U_{rn})}{A_o} + \frac{4.8(A_{s1}\times U_{s1} + A_{s2}\times U_{s2} + ... + A_{sn}\times U_{sn})}{A_o} + \frac{485(A_{s1}\times SC_{s1} + A_{s2}\times SC_{s2} + ... + A_{sn}\times SC_{sn})(CF)}{A_o}$$

where

A_{r1}, A_{r2}, A_{rn} : areas of different opaque roof (m^2)
A_{s1}, A_{s2}, A_{sn} : areas of different skylight (m^2)
A_o : gross area of roof (m^2)

U_{r1}, U_{r2}, U_{rn} : thermal transmittances of opaque roofs ($W/m^2 K$)
U_{s1}, U_{s2}, U_{sn} : thermal transmittances of skylights ($W/m^2 K$)
SC_{s1}, SC_{s2}, SC_{sn} : shading coefficient of skylights

7.3 If a roof consists of different sections facing different orientations or pitched at different angles, the RTTV for the whole roof shall be calculated as follows:

$$RTTV = \frac{A_{o1} \times RTTV_1 + A_{o2} \times RTTV_2 + \ldots A_{on} \times RTTV_n}{A_{o1} + A_{o2} + \ldots + A_{on}}$$

where

A_{o1}, A_{o2}, A_{on} :gross areas of the roof for each section (m^2)

7.4 The solar correction factors for roof are given in Table C2.

8 Residential Envelope Transmittance Value (RETV)

8.1 The RETV is similar to ETTV in that it takes into consideration the three basic components of heat gain through the external walls and windows of a building. These are:

i. heat conduction through opaque walls,
ii. heat conduction through glass windows, and
iii. solar radiation through glass windows.

8.2 These three components of heat input are averaged over the whole envelope area of the building to give an RETV that represents the thermal performance of the whole envelope. For the purpose of energy conservation, the maximum permissible **RETV has been set at 25 W/m^2.**

9 Residential Envelope Transmittance Value (RETV) Formula

9.1 The RETV formula is given as follows:

$$RETV = 3.4(1-WWR)U_w + 1.3(WWR)U_f + 58.6(WWR)(CF)(SC)$$

where

RETV	:	residential envelope transmittance value (W/m^2)
WWR	:	window-to-wall ratio (fenestration area/gross area of exterior wall)
U_w	:	thermal transmittance of opaque wall (W/m^2 K)
U_f	:	thermal transmittance of fenestration (W/m^2 K)
CF	:	correction factor for solar heat gain through fenestration
SC	:	shading coefficients of fenestration

9.2 Where more than one type of material and/or fenestration is used, the respective term or terms shall be expanded into sub-elements as shown:

$$RETV = \frac{3.4(A_{w1}\times U_{w1} + A_{w2}\times U_{w2} + \ldots + A_{wn}\times U_{wn})}{A_o} +$$

$$\frac{1.3(A_{f1}\times U_{f1} + A_{f2}\times U_{f2} + \ldots + A_{fn}\times U_{fn})}{A_o} +$$

$$\frac{58.6(A_{f1}\times SC_{f1} + A_{f2}\times SC_{f2} + \ldots + A_{fn}\times SC_{fn})(CF)}{A_o}$$

where

A_{w1}, A_{w2}, A_{wn}	:	areas of different opaque walls (m^2)
A_{f1}, A_{f2}, A_{fn}	:	areas of different fenestrations (m^2)
A_o	:	gross area of the exterior wall (m^2)
U_{w1}, U_{w2}, U_{wn}	:	thermal transmittances of opaque walls ($W/m^2 K$)
U_{f1}, U_{f2}, U_{fn}	:	thermal transmittances of fenestrations ($W/m^2 K$)
SC_{f1}, SC_{f2}, SC_{fn}	:	shading coefficients of fenestrations

9.3 The external façades of the living, dining, study and bedrooms are considered in the RETV computation. As walls at different orientations receive different amounts of solar radiation, it is necessary in general to first compute the RETVs of individual walls, then the RETV of the whole building envelope is obtained by taking the weighted average of these values. To calculate the RETV for the envelope of the whole building, the following formula shall be used:

$$RETV = \frac{A_{o1} \times RETV_1 + A_{o2} \times RETV_2 + \ldots + A_{on} + RETV_n}{A_{o1} + A_{o2} + \ldots + A_{on}}$$

where
A_{o1}, A_{o2}, A_{on} : gross areas of the exterior wall for each orientation (m^2)

9.4 The solar correction factors for walls are given in Table C3. For an example of the orientation of the wall, please refer to section 5.4.1.

10 Deem-to-Satisfy Criteria for RETV

10.1 Should the building's WWR and SC[1] fall within any one of the following sets of criteria, the building is deemed to have complied with RETV and; hence, is exempted from computing RETV.

$WWR_{Bldg} < 0.3$ and $SC^1_{facade} < 0.7$

or

$WWR_{Bldg} < 0.4$ and $SC^1_{facade} < 0.5$

or

$WWR_{Bldg} < 0.5$ and $SC^1_{facade} < 0.43$

where
WWR : Window to wall ratio
SC : Shading coefficient of fenestration = SC_{Glass} X $SC_{shading\ device}$
Note: This is applicable to buildings with external masonry walls.

[1] Each SC of the facade must not exceed the prescribed value.

Otherwise detailed RETV computation is required.

ROOF INSULATION FOR AIR-CONDITIONED NON-RESIDENTIAL (WITHOUT SKYLIGHT) AND RESIDENTIAL BUILDINGS

11 Thermal Transmittance of Roof

11.1 Solar heat gain into a building through an uninsulated roof increases air temperature indoor. In all buildings, directional radiation received on the roof can be one of the main causes of thermal discomfort.

11.2 For an air-conditioned building, solar heat gain through the roof also constitutes a substantial portion of the cooling load. From on-site solar radiation measurements taken in Singapore, the intensity of radiation on a horizontal surface can be as much as 3 times of that on a vertical surface.

11.3 The purpose of roof insulation is therefore to conserve energy in airconditioned buildings. The building regulations require that the average thermal transmittance (U-value) for the gross area of the roof shall not exceed the limit in the Table C4 for the corresponding weight group.

11.4 If the roof of an air-conditioned non-residential building is provided with skylight then RTTV computation is required.

APPENDIX A
THERMAL TRANSMITTANCE (U-VALUE) CALCULATION

A1 Thermo-Physical Properties of Building Materials

A1.1 Thermal conductivity (k-value)

The ability of a material to transmit heat is measured by its thermal conductivity or k-value. The k-value of a material is defined as the quantity of heat transmitted under steady-state conditions through unit area of the material of unit thickness in unit time when unit temperature difference exists between its opposite surfaces. It is expressed in W/m K. Table C5 gives the k-values of some commonly used building materials.

A1.2 Thermal resistivity (r)

The thermal resistivity of a material is the reciprocal of its thermal conductivity, i.e.

$$r = \frac{1}{k}$$

It may be defined as the time required for one unit of heat to pass through unit area of a material of unit thickness when unit temperature difference exists between opposite faces. It is expressed as m K/W.

A1.3 Thermal conductance (C)

Thermal conductance refers to specific thickness of a material or construction. It is the thermal transmission through unit area of a material per unit temperature difference between the hot and cold faces. It is expressed in W/m^2 K and is given by:

$$C = \frac{k}{b}$$

where b is the thickness of the material (m)

A1.4 Thermal resistance (R)

The thermal resistance of a material or construction is the reciprocal of its thermal conductance. It refers to the thermal resistance of any section or assembly of building components and is particularly useful in computing the overall transfer of heat across the building section. It is expressed as m^2 K/W and is given by:

$$R = \frac{1}{C} = \frac{b}{k}$$

A2 Thermal Transmittance (U-value)

The thermal transmittance or U-value of a construction is defined as the quantity of heat that flows through a unit area of a building section under steady-state conditions in unit time per unit temperature difference of the air on either side of the section. It is expressed in $W/m^2 K$ and is given by:

$$U = \frac{1}{R_T}$$

where R_T is the total thermal resistance and is given by:

$$R_T = R_o + \frac{b_1}{k_1} + \frac{b_2}{k_2} + \ldots + \frac{b_n}{k_n} + R_i$$

where

R_o	:	air film resistance of external surface ($m^2 K/W$)
R_I	:	air film resistance of internal surface ($m^2 K/W$)
k_1, k_2, k_n	:	thermal conductivity of basic material (W/m K)
b_1, b_2, b_n	:	thickness of basic material (m)

A3 Surface Air Film Resistance

A3.1 The transfer of heat to and from a surface of a body through air is impeded by the presence of a thin layer of relatively motionless air at the surface of the body. This offers resistance to the heat flow and results in a temperature drop across the layer of air.

A3.2 Surface air film resistance is affected by wind velocity and therefore different resistance values for outside and inside air films are given. These are defined as follows:

R_o : outside surface air film resistance (moving air)
R_i : inside surface air film resistance (still air)

A3.3 Table C6 gives the values of surface resistances for walls and roofs at different positions of surface and for different surface emissivity values.

A4 Air Space Resistance

A4.1 Air is a relatively poor conductor of heat. Its presence as a gap between two layers of materials contributes further thermal resistance to the whole construction. The U-value of a building section can therefore be modified as follows:

$$U = \frac{1}{R_T}$$

and

$$R_T = R_o + \frac{b_1}{k_1} + \ldots + R_a + \ldots + \frac{b_n}{k_n} + R_i$$

where

R_a : thermal resistance of air space

A4.2 Reflective materials such as aluminium foil have high surface reflectivity and low surface emissivity. If a reflective foil is inserted in an air space with its reflective surface facing the space and against the direction of heat flow as shown below, approximately 95% of the radiation will be reflected. This increases the thermal resistance of the air space.

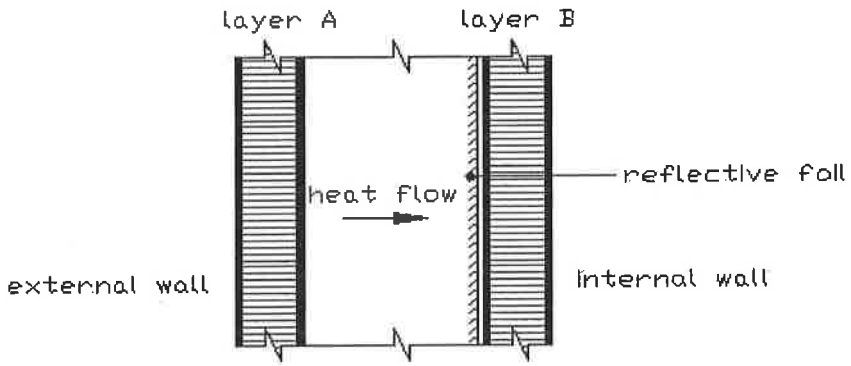

A4.3 If the heat flow is reversed as shown below, the result would be the same, as in this case, the low emissivity of the reflective surface emits only about 5% of the absorbed heat as radiant energy.

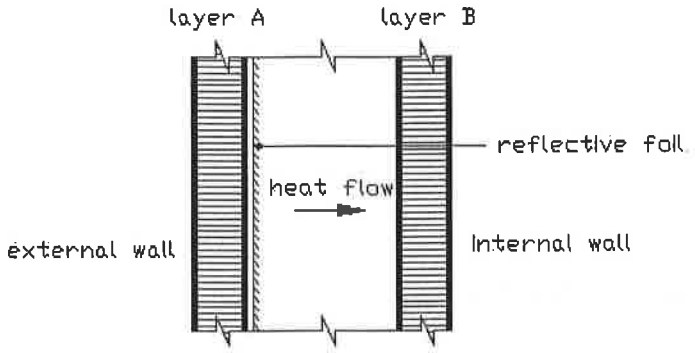

A4.4 Table C7 gives the values of air space resistances for walls and roofs at different positions and for different surface emissivity values in the air space.

APPENDIX B

SHADING COEFFICIENT OF SUN SHADING DEVICES

B1 Basic Solar Data

B1.1 Solar geometry

The position of the sun can be specified by the angles illustrated below:

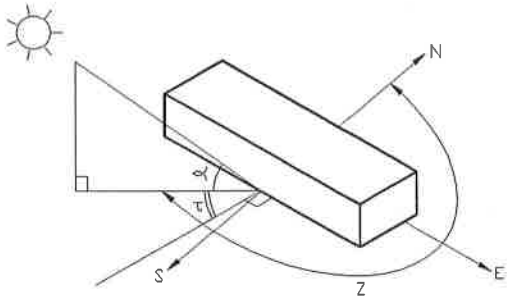

These angles are (i) altitude (α, angle above the horizon) and (ii) azimuth (z, compass orientation of a vertical plane through the sun, measured clockwise from north). The orientation of a wall is the angle measured clockwise from north of a plane normal to the wall and the wall-solar azimuth (τ) is the angle between the two planes.

B1.2 Shadow angles

For the purpose of finding the shading effect of horizontal projections, fins, louvers, or canopies, the vertical shadow angle (VSA) is required. This is the angle (θ_1) between two planes viz, the horizontal plane and an inclined plane projected through the sun as illustrated in the diagram below:

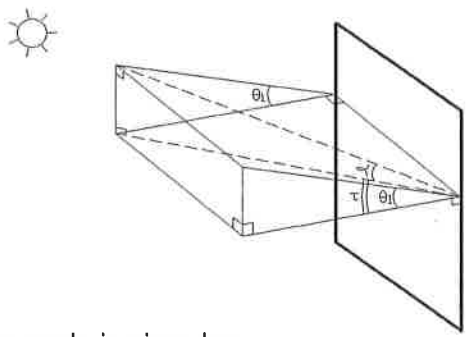

The vertical shadow angle is given by:

$$\tan\theta_1 = \tan\alpha \sec\tau$$

where

θ_1 : the vertical shadow angle
α : the altitude of the sun
τ : the wall-solar azimuth

To calculate the shading coefficient of vertical fins and projections, the horizontal shadow angle (HSA) has to be determined and it is given by the wall-solar azimuth angle (τ), i.e.

$$\theta_2 = \tau$$

where

θ_2 : the horizontal shadow angle

B1.3 Intensity of solar radiation

To facilitate the calculation of the effective shading coefficient of external shading devices, the intensities of diffuse, direct and total radiation transmitted through a standard 3mm clear glass sheet are tabulated in Tables C8 to C11 together with the horizontal and vertical shadow angles for March, June, September and December.

B2 Shading Coefficient

B2.1 Basic concept

In the RETV formula, the solar factor has been derived from the annual average of solar radiation transmitted through a 3mm clear glass window. For other system of fenestration, the rate of solar heat gain is modified by the shading coefficient of the fenestration system which is defined as the ratio of solar heat gain through the fenestration system having combination of glazing and shading device to the solar heat gain through an unshaded 3mm clear glass. This ratio is a unique characteristic of each type of fenestration system and is represented by the equation:

$$SC = \frac{\text{Solar heat gain of any glass and shading combination}}{\text{Solar heat gain through a 3mm unshaded clear glass}}$$

In general, the shading coefficient of any fenestration system can be obtained by multiplying the shading coefficient of the glass (or effective shading coefficient of glass with solar control film where a solar control film is used on the glass) and the shading coefficient of the sun-shading devices as follows:

$$SC = SC_1 \times SC_2$$

where

SC : shading coefficient of the fenestration system
SC_1 : shading coefficient of glass or effective shading coefficient of glass with solar control film where a solar control film is used on the glass
SC_2 : effective shading coefficient of external shading devices

Note: 1. For the purpose of RETV calculation, the shading effect offered by internal blind and curtain should be ignored.

The shading coefficient of the glass or effective shading coefficient of glass with solar control film should be based on the manufacturer's recommended value.

The effective shading coefficient of external shading devices as given in Tables C12 to C23 shall be used unless the type of shading device in question is not included in the tables. In that case, the effective shading coefficient shall be calculated from the basic solar data given in Tables C8 to C11 in accordance with the method specified in Section B2.2.

B2.2 Method of calculating effective shading coefficient of external sun-shading device

B2.2.1 When a window is partially shaded by an external shading device, it is assumed (for simplicity and for the purpose of RETV computation) that the exposed portion receives the total radiation, I_T, and the shaded portion receives only the diffuse radiation, I_d.

The instantaneous heat gain due to solar radiation can then be expressed as follows:

$$Q = A_e \times I_T + A_s \times I_d$$
$$= A_e \times I_D + (A_e + A_s) \times I_d$$

where

Q : solar heat gain
A_e : exposed area of window
A_s : shaded area of window
I_T : total radiation
I_D : direct radiation
I_d : diffused radiation

Since

$$A = A_e + A_s$$

Therefore

$$Q = A_e \times I_D + A \times I_d$$

For an unshaded 3mm clear glass, the solar heat gain is given by A x I_T. By definition, the hourly Shading Coefficient, SC, of a shading device can be expressed as:

$$SC = \frac{A_e \times I_D + A \times I_d}{A \times I_T}$$

$$= \frac{G \times I_D \times I_d}{I_T}$$

where

$G = \frac{A_e}{A}$ the fraction of area exposed to direct solar radiation

B2.2.2 To calculate the shading coefficient (SC) of a shading device for the whole day, the hourly solar heat gain shall be computed and summed up for the 12 daylight hours. The total solar heat gain is then divided by the sum of the total radiation, I_T, through an unshaded 3mm clear glass for the same hours of the day, to obtain the SC for the day. Mathematically, the computation can be expressed as follows:

$$SC_{day} = \frac{\sum_{h=1}^{h=12}(A_e \times I_D + I_d)_h}{\sum_{h=1}^{h=12}(A \times I_T)_h}$$

where subscript 'day' and 'h' refers to daily & hourly respectively.

B2.2.3 For simplicity, the SC of a shading device for a particular month can be worked out basing on the solar data for a representative day of the month.

B2.2.4 To determine the effective SC of a shading device, theoretically, the computation has to be carried out for 12 months of the year. However, as the computation involved is rather tedious and the degree of accuracy required is not a critical factor, it is deemed sufficient to base the SC computation on 4 representative months of the year, viz. March, June, September and December. The representative days of these 4 months are March 21, June 22, September 23 and December 22.

B2.2.5 Further, since the solar data for March 21 and September 23 are almost identical, it suffices to compute the solar heat gain for March and double it to take account of the heat gain for September. Mathematically, the effective SC of a shading device is given by:

$$\text{Effective SC} = \frac{\Sigma_M(G \times I_D + I_d) + \Sigma_J(G \times I_D + I_d)\Sigma_S(G \times I_D + I_d) + \Sigma_D(G \times I_D + I_d)}{\Sigma_M I_T + \Sigma_J I_T + \Sigma_S I_T + \Sigma_D I_T}$$

Where

M denotes March
J denotes June
S denotes September
D denotes December

B2.2.6 The relevant solar data are given in Tables C8 to C11.

B2.3 Determination of 'G' factor

The fraction of window area exposed to the sun (G) at any time for a given orientation can be determined using solar geometry. With the VSA and HSA given, the G factor can be worked out graphically. For simple design, the

G factor can also be calculated using plane trigonometry. In the following examples of calculating the G factor for simple horizontal overhangs, vertical fins and egg-crate sun-shades using trigonometry, the following convention is used:

θ1 = VSA (always positive)

θ2 = HSA (positive, if to the right of wall orientation; negative, if to the left of wall orientation).

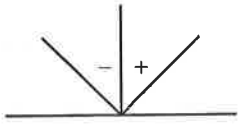

ϕ_1 = projection angle of horizontal projections with respect to horizontal plane (assume positive for practical reason).

ϕ_2 = projection angle of vertical fin with respect to wall orientation (positive, if to the right of wall orientation; negative, if to the left of wall orientation)

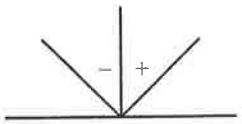

B2.3.1 For continuous horizontal projection fixed at window head level

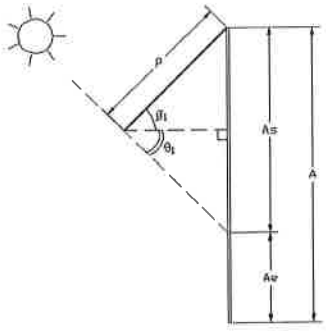

$$A_s = P\cos\phi_1 \tan\theta_1 + P\sin\phi_1$$

$$= P(\cos\phi_1 \tan\theta_1 + \sin\phi_1)$$

$$\frac{A_e}{A_s} = A - As$$

$$\frac{A_e}{A} = 1 - \frac{P}{A}(\cos\phi_1 \tan\theta_1 + \sin\phi_1)$$

or

$$G_1 = 1 - R_1(\cos\phi_1 \tan\phi_1 + \sin\phi_1)$$

Where

$G_1 = \frac{A_e}{A}$ and $R_1 = \frac{P}{A}$ for horizontal projections.

Notes: 1. $G_1 \geq 0$

2. Table C12 to Table C15 give the SC of horizontal projections for a range of R_1 values with ϕ_1 ranging from 0° to 50°.

B2.3.2 For continuous vertical fins in an array

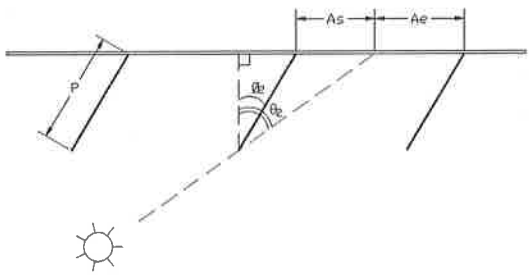

$$A_s = |P\cos\phi_2 \tan\phi_2 - P\sin\phi_2|$$

$$= P|\cos\phi_2 \tan\theta_2 - \sin\phi_2|$$

$$\frac{A_e}{A} = A - A_s$$

$$\frac{A_e}{A} = 1 - \frac{P}{A} \times |\cos\phi_2 \tan\phi_2 - \sin\phi_2|$$

or

$$G_2 = 1 - R_2 |\cos\phi_2 \tan\phi_2 - \sin\phi_2|$$

where

$$G_2 = \frac{A_e}{A} \text{ and } R_2 = \frac{P}{A} \text{ for vertical fins}$$

Notes: 1. $G_2 \geq 0$

2. Table C16 to Table C19 give the SC of vertical fins for a range of R_2 *values with* $|\phi_2|$ *ranging from* 0° *to* 50°. ϕ_2 *is chosen for the situation which gives the lower SC of the two possible values, viz positive or negative* ϕ_2.

B2.3.3 For egg-crate and combination fins made up of horizontal and vertical components for which the horizontal component may be sloped.

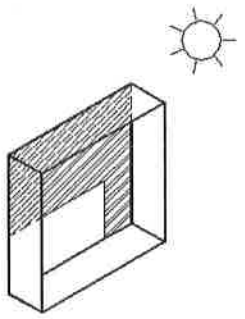

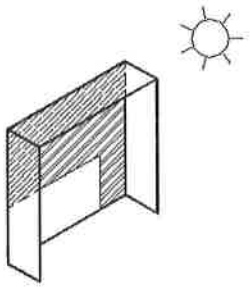

$$G_1 = 1 - R_1(\cos\phi_1 \tan\phi_1 - \sin\phi_1)$$

$$G_2 = 1 - R_2|\tan\theta_2|$$

Since G_1 and G_2 are independent of each other, the combined effect of the two components can be expressed as follows:

$$G_3 = G_1 \times G_2$$

Notes: 1. $G_3 \geq 0$

2. Table C20 to Table C23 give the SC of combination fins for a range of R_1 *and* R_2 *values with* ϕ_1 *ranging from* 0° *to* 40°.

B3 Examples

The following examples are meant to illustrate how the SC of a shading device is calculated from first principle.

B3.1 Example A

Find the effective shading coefficient (SC) of a sloping horizontal projection 1m in length, inclined at 15° and located over a window of 2m in height, in a North-East facing direction.

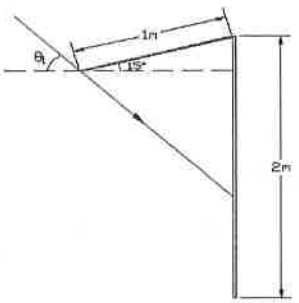

$\phi_1 = 15°$

$R_1 = 1/2 = 0.5$

NE	March 21 / September 23					June 22					December 22				
Item	θ_1	(1-G)	I_D	I_d	Q	θ_1	(1-G)	I_D	I_d	Q	θ_1	(1-G)	I_D	I_d	Q
7 am	6	0.180	94	23	100	6	0.180	159	33	163	15	0.260	52	20	58
8 am	26	0.365	293	76	262	21	0.315	387	86	351	46	0.630	111	63	104
9 am	44	0.600	336	106	240	34	0.455	462	116	368	67	—	87	83	83
10 am	59	0.933	278	126	144	47	0.647	435	133	286	81	—	28	98	98
11 am	72	—	154	136	136	58	0.902	345	141	175	—	—	0	109	109
12 noon	83	—	31	136	136	68	—	216	141	141	—	—	0	116	116
1 pm	—	—	0	133	136	78	—	98	110	110	—	—	0	116	116
2 pm	—	—	0	123	123	88	—	29	116	116	—	—	0	108	108
3 pm	—	—	0	104	104	—	—	0	93	93	—	—	0	93	93
4 pm	—	—	0	85	85	—	—	0	76	76	—	—	0	73	73
5 pm	—	—	0	60	60	—	—	0	53	53	—	—	0	50	50
6 pm	—	—	0	28	28	—	—	0	23	23	—	—	0	20	20
$\Sigma Q = \Sigma(G \times I_D + I_d)$			1554					1955					1028		
$\Sigma I_T = \Sigma(I_D + I_d)$			2322					3252					1227		
SC (day)			0.669					0.601					0.838		

$$\text{Effective SC (Annual)} = \frac{2\times\sum_M(G\times I_D + I_d)+\sum_J(G\times I_D + I_d)+\sum_D(G\times I_D + I_d)}{2\times\sum_M(I_T)+\sum_J(I_T)+\sum_D(I_T)}$$

$$= \frac{(2\times 1554)+1955+1028}{(2\times 2322)+3252+1227}$$

$$= \frac{6091}{9123}$$

$$= 0.67$$

B3.2 Example B

Find the effective SC of an egg-crate shading device having $R_1 = 0.4$, $\Phi_1 = 0$, $R_2 = 0.4$ in the North-facing direction.

June 22								
Item	**θ_1**	**G_1**	**θ_2**	**G_2**	**G_3**	**I_D**	**I_d**	**Q**
7 am	15	0.893	67	0.058	0.050	60	25	28
8 am	41	0.652	65	0.142	0.093	145	63	76
9 am	55	0.429	63	0.215	0.092	187	91	108
10 am	62	0.248	57	0.384	0.095	208	114	134
11 am	66	0.102	45	0.600	0.061	219	131	144
12 noon	68	0.010	21	0.846	0.000	222	141	141
1 pm	68	0.010	-14	0.900	0.000	225	141	141
2 pm	66	0.102	-41	0.652	0.067	219	134	149
3 pm	63	0.215	-55	0.429	0.092	209	119	138
4 pm	57	0.384	-62	0.248	0.095	195	98	116
5 pm	44	0.614	-65	0.142	0.087	156	71	85
6 pm	21	0.847	-66	0.102	0.086	81	33	40

$$\Sigma Q = \Sigma[(G_3 \times I_D) + I_d]$$

$$= 1300$$

$$\Sigma(I_T) = 3287$$

$$\text{Therefore SC (June 22)} = \frac{1300}{3287}$$

$$= 0.395$$

The same procedure is repeated for March 21, September 23 and December 22 in order to work out the effective SC for the whole year.

B3.3 Example C

Find the effective SC of a shading device parallel to the wall as shown in the diagram below. It is installed in a North-facing wall.

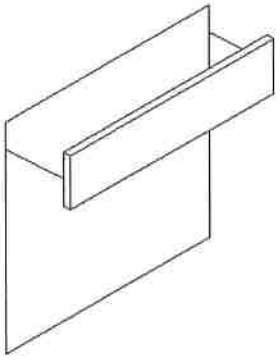

Fig (a)

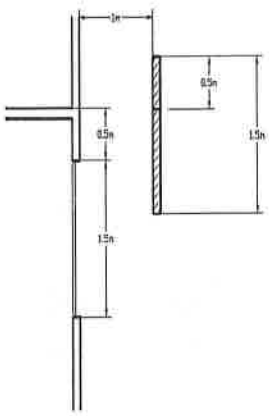

The glass window is shaded by a panel parallel to the wall. The shadow cast on the window varies according to the time of the day depending on the sun's position and its vertical shadow angle (θ_1).

For $68.2^\circ < \theta_1 < 90^\circ$, the shading device is ineffective as sun rays strike the window directly. See figure (b). For $\theta_1 = 45^\circ$, the window is totally shaded. See figure (c).

For $\theta_1 < 45^\circ$, the window is partially shaded by the lower portion of the strip. See figure (d).

The shadow patterns for figure (c) and figure (d) can be worked out by simple geometry.

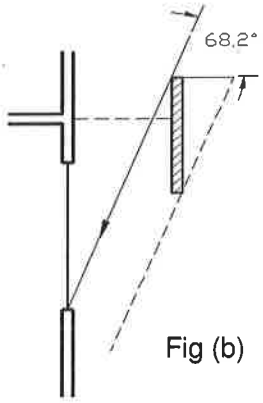

Fig (b)

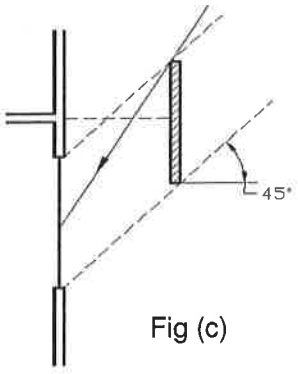

Fig (c)

JUNE 22						
Item	θ_1	G	I_D	I_d	$Q = G \times I_D + I_d$	$I_T = I_D + I_d$
7 am	15	0.488	60	25	54	85
8 am	41	0.087	145	63	76	208
9 am	55	0.285	187	91	144	278
10 am	62	0.587	208	114	236	322
11 am	66	0.831	219	131	313	350
12 noon	68	0.983	222	141	359	363
1 pm	68	0.983	225	141	362	366
2 pm	66	0.831	219	134	316	353
3 pm	63	0.642	209	119	253	328
4 pm	57	0.360	195	98	168	293
5 pm	44	0.023	156	71	75	227
6 pm	21	0.411	81	33	66	114

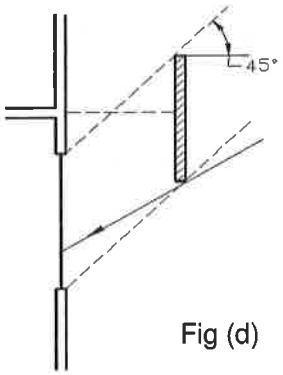

Fig (d)

B4 Keys for Tables of Effective Shading Coefficient of External Shading Devices

B4.1 Key 1 Horizontal Projections [Tables C12 to C15]

$$R_1 = \frac{P}{H}$$

ϕ_1 = Angle of inclination

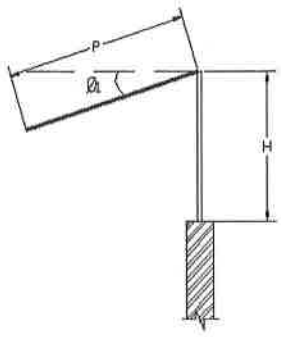

B4.2 Key 2 Vertical Projections [Tables C16 to C19]

$$R_2 = \frac{P}{W}$$

ϕ_2 = Angle of inclination

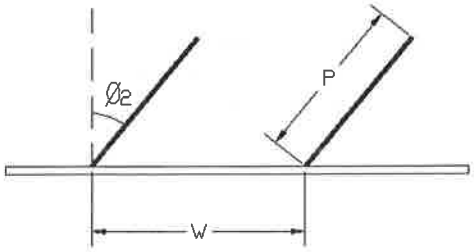

B4.3 Key 3 Egg-crate Louvers [Tables C20 to C23]

$$R_1 = \frac{P}{H}$$

$$R_2 = \frac{P}{W}$$

$\phi 1$ = Angle of inclination

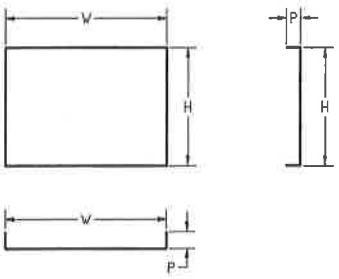

B5 Examples

B5.1 Given : Window on South-West facing wall with a 0.3m horizontal overhang.

Find : The effective shading coefficient if (a) height of window is 0.6m; (b) height of window is 0.75m with the overhang inclined at 30° to the horizontal.

Solution : Refer to Table C15

a) R_1 = 0.5 SC = 0.698
b) R_1 = 0.4 SC = 0.669

B5.2 Given : Window on West facing wall with a 0.3m horizontal overhang and height of window is 0.75.

Find : The effective shading coefficient if the window is located 0.2m below the overhang.

Solution : Assuming the window has a height h and extends to the underside of the overhang, the solar heat gain into the window can be expressed as follows:

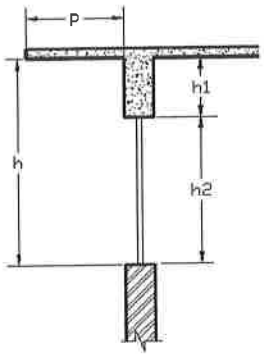

$$SC \times h = (SC_1 \times h_1) + (SC_2 \times h_2)$$

From Table C13 by interpolation

$SC = 0.8123$, $h = 950 (R_1 = 0.32)$

$SC_1 = 0.5051$, $h_1 = 200 (R_1 = 1.5)$

$$SC_2 = \frac{(SC \times h) - (SC_1 \times h_1)}{h_2}$$

$SC_2 = 0.894$

APPENDIX C

SCHEDULES OF TABLES

Table C1: Solar Correction Factors (CF) for Walls (ETTV)

Pitch Angle	Orientation							
	N	NE	E	SE	S	SW	W	NW
70°	1.17	1.33	1.47	1.35	1.21	1.41	1.56	1.38
75°	1.07	1.23	1.37	1.25	1.11	1.32	1.47	1.28
80°	0.98	1.14	1.30	1.16	1.01	1.23	1.39	1.20
85°	0.89	1.05	1.21	1.07	0.92	1.14	1.31	1.11
90°	0.80	0.97	1.13	0.98	0.83	1.06	1.23	1.03
95°	0.73	0.90	1.05	0.91	0.76	0.99	1.15	0.96
100°	0.67	0.83	0.97	0.84	0.70	0.92	1.08	0.89
105°	0.62	0.77	0.90	0.78	0.65	0.86	1.01	0.83
110°	0.59	0.72	0.83	0.72	0.61	0.80	0.94	0.78
115°	0.57	0.67	0.77	0.67	0.58	0.75	0.87	0.73
120°	0.55	0.63	0.72	0.63	0.56	0.71	0.81	0.69

Note: 1. The correction factors for other orientations and other pitch angles may be obtained by interpolation.

Table C2: Solar Correction Factors for Roofs

Pitch Angle	Orientation							
	N	NE	E	SE	S	SW	W	NW
0°	1.00	1.00	1.00	1.00	1.00	1.00	1.00	1.00
5°	1.00	1.00	1.00	1.00	1.00	1.00	1.00	1.00
10°	0.99	0.99	1.00	1.00	1.00	0.99	0.99	0.99
15°	0.98	0.98	0.99	0.99	0.99	0.98	0.98	0.98
20°	0.96	0.97	0.98	0.98	0.97	0.97	0.97	0.96
25°	0.93	0.95	0.96	0.96	0.95	0.95	0.95	0.94
30°	0.91	0.92	0.94	0.94	0.93	0.93	0.93	0.91
35°	0.88	0.90	0.92	0.91	0.90	0.90	0.90	0.89
40°	0.84	0.87	0.89	0.88	0.87	0.87	0.87	0.85
45°	0.80	0.83	0.86	0.85	0.83	0.84	0.84	0.82
50°	0.76	0.80	0.83	0.82	0.79	0.80	0.81	0.78
55°	0.72	0.76	0.80	0.78	0.75	0.76	0.78	0.75
60°	0.67	0.72	0.76	0.74	0.70	0.73	0.74	0.71
65°	0.63	0.68	0.73	0.70	0.66	0.69	0.71	0.67

Table C3 : Solar Correction Factors (CF) for Walls (RETV)

Pitch Angle	Orientation							
	N	NE	E	SE	S	SW	W	NW
90°	0.83	1.01	1.18	1.02	0.86	1.09	1.26	1.06
80°	0.98	1.15	1.34	1.18	1.01	1.23	1.41	1.21
70°	1.13	1.30	1.48	1.35	1.17	1.38	1.55	1.36

Note: 1. The correction factors for other orientations and other pitch angles may be obtained by interpolation.

Table C4: Maximum Thermal Transmittance of Roof of Air-Conditioned Building

Weight group	Weight range (kg/m^2)	Maximum thermal transmittance (W/m^2K)
Light	Under 50	0.5
Medium	50 to 230	0.8
Heavy	Over 230	1.2

Table C5: Thermal Conductivity Values (k-Values) of Basic Materials

S/No	Material	Density (kg/m^3)	k-value (W/m K)
1	Asphalt, roofing	2240	1.226
2	Bitumen	-	1.298
3	Brick		
	(a) dry (covered by plaster or tiles outside)	1760	0.807
	(b) common brickwall (brickwall directly exposed to weather outside).	-	1.154
4	Concrete	2400	1.442
		64	0.144
5	Concrete, lightweight	960	0.303
		1120	0.346
		1280	0.476
6	Cork board	144	0.042
7	Fibre board	264	0.052

8	Fibre glass (See Glass Wool and Mineral Wool)		
9	Glass, sheet	2512	1.053
10	Glass wool, mat or guilt (dry)	32	0.035
11	Gypsum plaster board	880	0.170
12	Hard board:		
	(a) Standard	1024	0.216
	(b) medium	640	0.123
13	Metals:		
	(a) Aluminium alloy, typical	2672	211
	(b) Copper, commercial	8784	385
	(c) Steel	7840	47.6
14	Mineral wool, felt	32 - 104	0.035 - 0.032
15	Plaster:		
	(a) gypsum	1216	0.370
	(b) perlite	616	0.115
	(c) sand / cement	1568	0.533
	(d) vermiculite	640 - 960	0.202 - 0.303
16	Polystyrene, expanded	16	0.035
17	Polyurethane, foam	24	0.024
18	PVC flooring	1360	0.713
19	Soil, loosely packed	1200	0.375
20	Stone, tile:		
	(a) sand stone	2000	1.298
	(b) granite	2640	2.927
	(c) marble / terrazzo / ceramic / mosaic	2640	1.298
21	Tile, roof	1890	0.836
22	Timber:		
	(a) across grain softwood	608	0.125
	(b) hardwood	702	0.138
	(c) plywood	528	0.138
23	Vermiculite, loose granules	80-112	0.065
24	Wood chipboard	800	0.144
25	Woodwool slab	400	0.086
		480	0.101

Table C6: Surface Film Resistances for Walls and Roofs

Type of Surface	Thermal Resistance (m^2 K /W)
A. Surface Film Resistances for Walls	
1. Inside Surface (R_i)	
(a) High emissivity	0.120
(b) Low emissivity	0.299
2. Outside surface (R_o) - High emissivity	0.044
B. Surface Film Resistances for Roofs	
1. Inside surface (R_i)	
(a) High Emissivity	
(i) Flat roof	0.162
(ii) Sloped roof 22½°	0.148
(iii) Sloped roof 45°	0.133
(b) Low Emissivity	
(i) Flat roof	0.801
(ii) Sloped roof 22½°	0.595
(iii) Sloped roof 45°	0.391
2. Outside surface (R_o) - High emissivity Flat or sloped	0.055

Notes: 1. Ordinarily, high emissivity is assumed for surfaces of building materials with reasonably smooth finishing. Low emissivity applies only to internal surface if the surface is very reflective, such as that of an aluminium foil.

2. Interpolation between the angle of slope from horizontal to 45° is permitted. For angle beyond 45°, the value for 45° can be used; no extrapolation is needed.

Table C7: Air Space Resistances for Walls and Roofs

Type of Air Space	Thermal Resistance (m^2K/W)		
	5mm	20mm	100mm
A. Air Space Resistances (R_a) for walls			
Vertical air space (Heat flows horizontally)			
(a) High emissivity	0.110	0.148	0.160
(b) Low emissivity	0.250	0.578	0.606
B. Air Space Resistances (R_a) for Roofs			
Horizontal or sloping air space (Heat flows downwards)			
(a) High emissivity			
(i) horizontal air space	0.110	0.148	0.174
(ii) sloped air space 22½°	0.110	0.148	0.165
(iii) sloped air space 45°	0.110	0.148	0.158
(b) Low emissivity			
(i) horizontal air space	0.250	0.572	1.423
(ii) sloped air space 22½°	0.250	0.571	1.095
(iii) sloped air space 45°	0.250	0.570	0.768
C. Attic space resistances (R attic)			
(a) High emissivity		0.458	
(b) Low emissivity		1.356	

Notes: 1. Ordinarily, high emissivity is assumed for air spaces bounded by building materials of moderately smooth surfaces. Low emissivity only applies where one or both sides of the air space are bounded by a reflective surface such as that of an aluminium foil.

2. Interpolation with the range of pitch angles from horizontal to 45° is permitted. For angles beyond 45°, the value for 45° can be used; no extrapolation is needed.

3. Interpolation within the range of thickness from 5mm to 100mm is permitted. For air spaces less than 5mm, extrapolation basing on R_a = 0 for zero thickness is allowed; otherwise R_a is assumed to be zero. For air spaces greater than 100mm, the R_a for 100mm should be used; i.e. extrapolation is not permitted.

4. In the case of air space in roof, reflective foil used should be installed with the reflective surface facing downward as dust deposit will render an upward-facing surface ineffective after a while.

Table C8: Solar Data

Orientation: North & South

TIME	MARCH 21 / SEPTEMBER 23					JUNE 22					DECEMBER 22				
	θ_1	θ_2	I_D	I_d	I_T	θ_1	θ_2	I_D	I_d	I_T	θ_1	θ_2	I_D	I_d	I_T
7 AM	90	+90	0	13	13	15	+67	60	25	85	—	—	0	15	15
8 AM	90	+90	0	48	48	41	+65	145	63	208	—	—	0	48	48
9 AM	—	—	0	76	76	55	+63	187	91	278	—	—	0	71	71
10 AM	—	—	0	98	98	62	+57	208	114	322	—	—	0	91	91
11 AM	—	—	0	118	118	66	+45	219	131	350	—	—	0	109	109
12 NOON	—	—	0	129	129	68	+21	222	141	363	—	—	0	117	117
1 PM	—	—	0	133	133	68	-14	225	141	366	—	—	0	116	116
2 PM	—	—	0	123	123	66	-41	219	134	353	—	—	0	108	108
3 PM	—	—	0	104	104	63	-55	209	119	328	—	—	0	93	93
4 PM	—	—	0	85	85	57	-62	195	98	293	—	—	0	73	73
5 PM	90	-90	0	60	60	44	-65	156	71	227	—	—	0	50	50
6 PM	90	-90	0	28	28	21	-66	81	33	114	—	—	0	20	20

Note: 1. For the purpose of calculating shading coefficient, the solar data for the North orientation can be used for the South orientation.

Table C9: Solar Data

Orientation: East & West

TIME	MARCH 21 / SEPTEMBER 23					JUNE 22					DECEMBER 22				
	θ_1	θ_2	I_D	I_d	I_T	θ_1	θ_2	I_D	I_d	I_T	θ_1	θ_2	I_D	I_d	I_T
7 AM	4	+0	136	25	161	7	-23	159	33	192	6	+24	159	30	189
8 AM	19	+0	429	88	517	21	-25	374	83	457	21	+25	394	86	480
9 AM	34	+1	504	121	625	36	-27	427	110	537	36	+29	445	114	559
10 AM	49	+2	435	139	574	51	-33	360	126	486	51	+36	373	129	502
11 AM	64	+3	282	146	428	66	-45	213	131	344	67	+49	216	134	350
12 NOON	79	+7	74	141	215	81	-69	44	126	170	82	+73	41	126	167
1 PM	—	—	0	133	133	—	—	0	116	116	—	—	0	116	116
2 PM	—	—	0	123	123	—	—	0	109	109	—	—	0	108	108
3 PM	—	—	0	104	104	—	—	0	93	93	—	—	0	93	93
4 PM	—	—	0	85	85	—	—	0	76	76	—	—	0	73	73
5 PM	—	—	0	60	60	—	—	0	53	53	—	—	0	50	50
6 PM	—	—	0	28	28	—	—	0	23	23	—	—	0	20	20

Note: 1. For the purpose of calculating shading coefficient, the solar data for the East orientation can be used for the West orientation.

Table C10: Solar Data

Orientation: North-East & North-West

TIME	MARCH 21 / SEPTEMBER 23					JUNE 22					DECEMBER 22				
	θ_1	θ_2	I_D	I_d	I_T	θ_1	θ_2	I_D	I_d	I_T	θ_1	θ_2	I_D	I_d	I_T
7 AM	6	+45	94	23	117	6	+22	159	33	192	15	+69	52	20	72
8 AM	26	+45	293	76	369	21	+20	387	86	473	46	+70	111	63	174
9 AM	44	+46	336	106	442	34	+18	462	116	578	67	+74	87	83	170
10 AM	59	+47	278	126	404	47	+12	435	133	568	81	+81	28	98	126
11 AM	72	+48	154	136	290	58	-0	345	141	486	—	—	0	109	109
12 NOON	83	+52	31	136	167	68	-24	216	141	357	—	—	0	116	116
1 PM	—	—	0	133	133	78	-59	98	110	208	—	—	0	116	116
2 PM	—	—	0	123	123	88	-86	29	116	145	—	—	0	108	108
3 PM	—	—	0	104	104	—	—	0	93	93	—	—	0	93	93
4 PM	—	—	0	85	85	—	—	0	76	76	—	—	0	73	73
5 PM	—	—	0	60	60	—	—	0	53	53	—	—	0	50	50
6 PM	—	—	0	28	28	—	—	0	23	23	—	—	0	20	20

Note: 1. For the purpose of calculating shading coefficient, the solar data for the North-East orientation can be used for the North-West orientation.

Table C11: Solar Data

Orientation: South-East & South-West

TIME	MARCH 21 / SEPTEMBER 23					JUNE 22					DECEMBER 22				
	θ_1	θ_2	I_D	I_d	I_T	θ_1	θ_2	I_D	I_d	I_T	θ_1	θ_2	I_D	I_d	I_T
7 AM	6	-45	94	23	117	16	-68	53	23	76	6	-21	162	30	192
8 AM	26	-45	321	48	369	46	-70	114	63	177	20	-20	417	88	505
9 AM	44	-44	382	76	458	65	-72	97	86	183	34	-16	496	119	615
10 AM	58	-43	325	98	423	79	-78	38	98	136	46	-9	470	136	606
11 AM	70	-42	180	136	316	—	—	0	106	106	57	+4	389	146	535
12 NOON	82	-38	47	139	186	—	—	0	116	116	67	+28	244	144	388
1 PM	—	—	0	133	133	—	—	0	116	116	76	+60	99	131	230
2 PM	—	—	0	123	123	—	—	0	109	109	86	+84	9	111	120
3 PM	—	—	0	104	104	—	—	0	93	93	—	—	0	93	93
4 PM	—	—	0	85	85	—	—	0	76	76	—	—	0	73	73
5 PM	—	—	0	60	60	—	—	0	53	53	—	—	0	50	50
6 PM	—	—	0	28	28	—	—	0	23	23	—	—	0	20	20

Note: 1. For the purpose of calculating shading coefficient, the solar data for the South-East orientation can be used for the South-West orientation.

Table C12: Effective Shading Coefficients of Horizontal Projection at Various Angles of Inclination

Orientation: North & South

R_1	0°	10°	20°	30°	40°	50°
0.1	0.9380	0.9330	0.9300	0.9291	0.9303	0.9336
0.2	0.8773	0.8674	0.8613	0.8595	0.8619	0.8685
0.3	0.8167	0.8017	0.7927	0.7899	0.7935	0.8033
0.4	0.7560	0.7392	0.7288	0.7245	0.7263	0.7382
0.5	0.7210	0.7080	0.7001	0.6950	0.6927	0.6938
0.6	0.7041	0.6921	0.6848	0.6804	0.6774	0.6760
0.7	0.6923	0.6842	0.6775	0.6723	0.6689	0.6672
0.8	0.6871	0.6779	0.6702	0.6661	0.6641	0.6626
0.9	0.6819	0.6718	0.6670	0.6643	0.6621	0.6604
1.0	0.6767	0.6690	0.6655	0.6625	0.6600	0.6583
1.1	0.6731	0.6678	0.6640	0.6607	0.6584	0.6577
1.2	0.6713	0.6667	0.6625	0.6589	0.6577	0.6577
1.3	0.6705	0.6656	0.6611	0.6582	0.6577	0.6577
1.4	0.6698	0.6644	0.6596	0.6577	0.6577	0.6577
1.5	0.6690	0.6633	0.6588	0.6577	0.6577	0.6577
1.6	0.6683	0.6622	0.6582	0.6577	0.6577	0.6577
1.7	0.6675	0.6610	0.6577	0.6577	0.6577	0.6577
1.8	0.6667	0.6599	0.6577	0.6577	0.6577	0.6577
1.9	0.6660	0.6594	0.6577	0.6577	0.6577	0.6577
2.0	0.6652	0.6589	0.6577	0.6577	0.6577	0.6577
2.1	0.6645	0.6585	0.6577	0.6577	0.6577	0.6577
2.2	0.6637	0.6581	0.6577	0.6577	0.6577	0.6577
2.3	0.6630	0.6577	0.6577	0.6577	0.6577	0.6577
2.4	0.6622	0.6577	0.6577	0.6577	0.6577	0.6577
2.5	0.6614	0.6577	0.6577	0.6577	0.6577	0.6577
2.6	0.6607	0.6577	0.6577	0.6577	0.6577	0.6577
2.7	0.6604	0.6577	0.6577	0.6577	0.6577	0.6577
2.8	0.6601	0.6577	0.6577	0.6577	0.6577	0.6577
2.9	0.6599	0.6577	0.6577	0.6577	0.6577	0.6577
3.0	0.6596	0.6577	0.6577	0.6577	0.6577	0.6577

Table C13: Effective Shading Coefficients of Horizontal Projection at Various Angles of Inclination

Orientation: East & West

R_1	0°	10°	20°	30°	40°	50°
0.1	0.9363	0.9268	0.9195	0.9147	0.9124	0.9129
0.2	0.8752	0.8565	0.8416	0.8309	0.8257	0.8257
0.3	0.8228	0.7947	0.7723	0.7563	0.7470	0.7448
0.4	0.7703	0.7330	0.7036	0.6820	0.6693	0.6664
0.5	0.7248	0.6842	0.6550	0.6231	0.6045	0.5946
0.6	0.6911	0.6424	0.6013	0.5691	0.5467	0.5349
0.7	0.6574	0.6006	0.5559	0.5249	0.5012	0.4851
0.8	0.6237	0.5693	0.5273	0.4923	0.4651	0.4467
0.9	0.5998	0.5463	0.4991	0.4608	0.4389	0.4237
1.0	0.5827	0.5232	0.4727	0.4442	0.4222	0.4062
1.1	0.5656	0.5002	0.4587	0.4296	0.4075	0.4010
1.2	0.5485	0.4828	0.4468	0.4151	0.4036	0.3969
1.3	0.5314	0.4739	0.4349	0.4089	0.3999	0.3963
1.4	0.5156	0.4650	0.4230	0.4059	0.3969	0.3963
1.5	0.5051	0.4561	0.4147	0.4029	0.3963	0.3963
1.6	0.4995	0.4472	0.4123	0.3999	0.3963	0.3963
1.7	0.4939	0.4383	0.4101	0.3974	0.3963	0.3963
1.8	0.4882	0.4294	0.4079	0.3963	0.3963	0.3963
1.9	0.4826	0.4237	0.4057	0.3963	0.3963	0.3963
2.0	0.4770	0.4204	0.4035	0.3963	0.3963	0.3963
2.1	0.4713	0.4190	0.4013	0.3963	0.3963	0.3963
2.2	0.4657	0.4176	0.3991	0.3963	0.3963	0.3963
2.3	0.4601	0.4163	0.3978	0.3963	0.3963	0.3963
2.4	0.4544	0.4149	0.3968	0.3963	0.3963	0.3963
2.5	0.4488	0.4135	0.3963	0.3963	0.3963	0.3963
2.6	0.4432	0.4122	0.3963	0.3963	0.3963	0.3963
2.7	0.4400	0.4108	0.3963	0.3963	0.3963	0.3963
2.8	0.4369	0.4094	0.3963	0.3963	0.3963	0.3963
2.9	0.4339	0.4081	0.3963	0.3963	0.3963	0.3963
3.0	0.4333	0.4067	0.3963	0.3963	0.3963	0.3963

Table C14: Effective Shading Coefficients of Horizontal Projection at Various Angles of Inclination

Orientation: North-East & North-West

R_1	0°	10°	20°	30°	40°	50°
0.1	0.9273	0.9193	0.9137	0.9106	0.9101	0.9122
0.2	0.8630	0.8471	0.8355	0.8285	0.8263	0.8291
0.3	0.8054	0.7820	0.7644	0.7533	0.7489	0.7515
0.4	0.7563	0.7278	0.7055	0.6895	0.6803	0.6799
0.5	0.7171	0.6824	0.6546	0.6345	0.6228	0.6198
0.6	0.6787	0.6443	0.6165	0.5946	0.5793	0.5710
0.7	0.6549	0.6166	0.5842	0.5587	0.5420	0.5320
0.8	0.6327	0.5889	0.5563	0.5360	0.5200	0.5088
0.9	0.6105	0.5681	0.5412	0.5184	0.5026	0.4919
1.0	0.5922	0.5560	0.5261	0.5051	0.4900	0.4826
1.1	0.5809	0.5440	0.5148	0.4939	0.4840	0.4790
1.2	0.5722	0.5321	0.5046	0.4877	0.4809	0.4759
1.3	0.5634	0.5243	0.4971	0.4850	0.4782	0.4759
1.4	0.5547	0.5165	0.4921	0.4825	0.4759	0.4759
1.5	0.5466	0.5086	0.4894	0.4802	0.4759	0.4759
1.6	0.5413	0.5037	0.4874	0.4780	0.4759	0.4759
1.7	0.5359	0.5001	0.4854	0.4759	0.4759	0.4759
1.8	0.5306	0.4965	0.4837	0.4759	0.4759	0.4759
1.9	0.5253	0.4949	0.4821	0.4759	0.4759	0.4759
2.0	0.5200	0.4936	0.4804	0.4759	0.4759	0.4759
2.1	0.5162	0.4923	0.4787	0.4759	0.4759	0.4759
2.2	0.5141	0.4909	0.4770	0.4759	0.4759	0.4759
2.3	0.5119	0.4897	0.4759	0.4759	0.4759	0.4759
2.4	0.5097	0.4886	0.4759	0.4759	0.4759	0.4759
2.5	0.5075	0.4876	0.4759	0.4759	0.4759	0.4759
2.6	0.5053	0.4865	0.4759	0.4759	0.4759	0.4759
2.7	0.5047	0.4855	0.4759	0.4759	0.4759	0.4759
2.8	0.5042	0.4844	0.4759	0.4759	0.4759	0.4759
2.9	0.5036	0.4834	0.4759	0.4759	0.4759	0.4759
3.0	0.5031	0.4823	0.4759	0.4759	0.4759	0.4759

Table C15: Effective Shading Coefficients of Horizontal Projection at Various Angles of Inclination

Orientation: South-East & South-West

R_1	0°	10°	20°	30°	40°	50°
0.1	0.9253	0.9167	0.9107	0.9072	0.9065	0.9086
0.2	0.8574	0.8405	0.8280	0.8203	0.8177	0.8204
0.3	0.7964	0.7715	0.7527	0.7406	0.7355	0.7377
0.4	0.7413	0.7100	0.6862	0.6692	0.6601	0.6597
0.5	0.6981	0.6615	0.6321	0.6109	0.5985	0.5951
0.6	0.6578	0.6179	0.5890	0.5663	0.5503	0.5417
0.7	0.6289	0.5891	0.5555	0.5289	0.5107	0.5004
0.8	0.6059	0.5604	0.5251	0.5044	0.4880	0.4765
0.9	0.5828	0.5372	0.5096	0.4863	0.4702	0.4592
1.0	0.5619	0.5248	0.4942	0.4727	0.4573	0.4493
1.1	0.5502	0.5124	0.4826	0.4613	0.4507	0.4459
1.2	0.5413	0.5003	0.4722	0.4551	0.4477	0.4429
1.3	0.5323	0.4923	0.4646	0.4516	0.4451	0.4429
1.4	0.5234	0.4843	0.4596	0.4492	0.4429	0.4429
1.5	0.5150	0.4763	0.4558	0.4471	0.4429	0.4429
1.6	0.5096	0.4714	0.4538	0.4449	0.4429	0.4429
1.7	0.5042	0.4678	0.4521	0.4429	0.4429	0.4429
1.8	0.4988	0.4642	0.4505	0.4429	0.4429	0.4429
1.9	0.4933	0.4610	0.4489	0.4429	0.4429	0.4429
2.0	0.4879	0.4598	0.4472	0.4429	0.4429	0.4429
2.1	0.4841	0.4585	0.4456	0.4429	0.4429	0.4429
2.2	0.4820	0.4572	0.4440	0.4429	0.4429	0.4429
2.3	0.4798	0.4562	0.4429	0.4429	0.4429	0.4429
2.4	0.4777	0.4552	0.4429	0.4429	0.4429	0.4429
2.5	0.4755	0.4542	0.4429	0.4429	0.4429	0.4429
2.6	0.4734	0.4532	0.4429	0.4429	0.4429	0.4429
2.7	0.4712	0.4521	0.4429	0.4429	0.4429	0.4429
2.8	0.4699	0.4511	0.4429	0.4429	0.4429	0.4429
2.9	0.4694	0.4501	0.4429	0.4429	0.4429	0.4429
3.0	0.4688	0.4491	0.4429	0.4429	0.4429	0.4429

Table C16: Effective Shading Coefficients of Vertical Projection at Various Angles of Inclination

Orientation: North & South

R_2	0°	10°	20°	30°	40°	50°
0.1	0.9526	0.9534	0.9549	0.9571	0.9606	0.9638
0.2	0.9066	0.9082	0.9110	0.9155	0.9225	0.9289
0.3	0.8605	0.8630	0.8672	0.8739	0.8844	0.8940
0.4	0.8144	0.8177	0.8236	0.8325	0.8463	0.8591
0.5	0.7752	0.7800	0.7892	0.8005	0.8159	0.8277
0.6	0.7540	0.7563	0.7632	0.7768	0.7950	0.8078
0.7	0.7379	0.7434	0.7464	0.7560	0.7771	0.7920
0.8	0.7290	0.7306	0.7348	0.7423	0.7637	0.7807
0.9	0.7202	0.7230	0.7269	0.7319	0.7507	0.7699
1.0	0.7114	0.7183	0.7190	0.7246	0.7388	0.7595
1.1	0.7060	0.7137	0.7144	0.7173	0.7308	0.7523
1.2	0.7022	0.7091	0.7098	0.7099	0.7251	0.7451
1.3	0.7000	0.7045	0.7053	0.7055	0.7206	0.7379
1.4	0.6977	0.6999	0.7007	0.7022	0.7173	0.7307
1.5	0.6954	0.6961	0.6981	0.7003	0.7141	0.7236
1.6	0.6932	0.6939	0.6960	0.6983	0.7109	0.7173
1.7	0.6909	0.6916	0.6940	0.6964	0.7077	0.7131
1.8	0.6886	0.6894	0.6919	0.6945	0.7044	0.7105
1.9	0.6864	0.6889	0.6899	0.6926	0.7012	0.7078
2.0	0.6841	0.6886	0.6878	0.6907	0.6980	0.7052
2.1	0.6818	0.6884	0.6858	0.6888	0.6948	0.7056
2.2	0.6796	0.6881	0.6853	0.6869	0.6915	0.7000
2.3	0.6773	0.6879	0.6849	0.6849	0.6910	0.6979
2.4	0.6750	0.6876	0.6845	0.6830	0.6909	0.6967
2.5	0.6728	0.6873	0.6841	0.6811	0.6908	0.6954
2.6	0.6705	0.6871	0.6837	0.6792	0.6908	0.6942
2.7	0.6695	0.6868	0.6833	0.6773	0.6907	0.6930
2.8	0.6686	0.6866	0.6829	0.6754	0.6906	0.6917
2.9	0.6677	0.6863	0.6826	0.6735	0.6905	0.6905
3.0	0.6668	0.6860	0.6822	0.6716	0.6904	0.6893

Table C17: Effective Shading Coefficients of Vertical Projection at Various Angles of Inclination

Orientation: East & West

R_2	0°	10°	20°	30°	40°	50°
0.1	0.9805	0.9751	0.9704	0.9653	0.9584	0.9520
0.2	0.9607	0.9499	0.9406	0.9302	0.9166	0.9038
0.3	0.9409	0.9247	0.9108	0.8952	0.8747	0.8555
0.4	0.9223	0.9007	0.8821	0.8614	0.8338	0.8078
0.5	0.9047	0.8774	0.8537	0.8275	0.7931	0.7606
0.6	0.8870	0.8543	0.8259	0.7939	0.7523	0.7133
0.7	0.8694	0.8313	0.7980	0.7616	0.7129	0.6671
0.8	0.8518	0.8090	0.7728	0.7312	0.6753	0.6227
0.9	0.8348	0.7884	0.7476	0.7014	0.6406	0.5823
1.0	0.8193	0.7678	0.7233	0.6747	0.6098	0.5493
1.1	0.8057	0.7471	0.7015	0.6511	0.5850	0.5184
1.2	0.7921	0.7287	0.6810	0.6320	0.5605	0.4880
1.3	0.7785	0.7120	0.6631	0.6135	0.5361	0.4633
1.4	0.7654	0.6960	0.6482	0.5949	0.5120	0.4577
1.5	0.7541	0.6826	0.6334	0.5764	0.4899	0.4526
1.6	0.7441	0.6696	0.6187	0.5579	0.4820	0.4474
1.7	0.7349	0.6589	0.6042	0.5397	0.4790	0.4422
1.8	0.7257	0.6485	0.5906	0.5220	0.4760	0.4371
1.9	0.7185	0.6381	0.5770	0.5065	0.4730	0.4319
2.0	0.7122	0.6276	0.5634	0.4982	0.4700	0.4268
2.1	0.7070	0.6172	0.5497	0.4966	0.4670	0.4221
2.2	0.7036	0.6076	0.5362	0.4950	0.4641	0.4185
2.3	0.7019	0.5987	0.5232	0.4934	0.4611	0.4158
2.4	0.7007	0.5897	0.5101	0.4918	0.4581	0.4145
2.5	0.6999	0.5808	0.4971	0.4902	0.4551	0.4132
2.6	0.6990	0.5718	0.4849	0.4886	0.4521	0.4119
2.7	0.6982	0.5629	0.4747	0.4870	0.4491	0.4105
2.8	0.6974	0.5539	0.4668	0.4859	0.4461	0.4092
2.9	0.6965	0.5450	0.4616	0.4850	0.4431	0.4082
3.0	0.6957	0.5360	0.4591	0.4841	0.4401	0.4080

Table C18: Effective Shading Coefficients of Vertical Projection at Various Angles of Inclination

Orientation: North-East & North-West

R_2	0°	10°	20°	30°	40°	50°
0.1	0.9517	0.9445	0.9389	0.9346	0.9317	0.9314
0.2	0.9074	0.8931	0.8819	0.8729	0.8670	0.8650
0.3	0.8646	0.8436	0.8268	0.8131	0.8036	0.8005
0.4	0.8262	0.7991	0.7770	0.7585	0.7449	0.7381
0.5	0.7912	0.7573	0.7297	0.7066	0.6895	0.6809
0.6	0.7562	0.7155	0.6824	0.6546	0.6342	0.6239
0.7	0.7230	0.6740	0.6356	0.6043	0.5832	0.5701
0.8	0.6899	0.6352	0.6038	0.5836	0.5643	0.5493
0.9	0.6575	0.6158	0.5921	0.5683	0.5465	0.5296
1.0	0.6359	0.6069	0.5806	0.5530	0.5288	0.5104
1.1	0.6300	0.5981	0.5691	0.5380	0.5125	0.5005
1.2	0.6240	0.5892	0.5576	0.5241	0.5038	0.4958
1.3	0.6181	0.5803	0.5461	0.5146	0.4984	0.4915
1.4	0.6121	0.5715	0.5348	0.5091	0.4946	0.4898
1.5	0.6061	0.5626	0.5257	0.5050	0.4908	0.4884
1.6	0.6002	0.5537	0.5201	0.5028	0.4881	0.4869
1.7	0.5942	0.5449	0.5161	0.5006	0.4874	0.4854
1.8	0.5883	0.5365	0.5120	0.4985	0.4867	0.4840
1.9	0.5823	0.5291	0.5094	0.4963	0.4860	0.4825
2.0	0.5763	0.5235	0.5079	0.4941	0.4853	0.4811
2.1	0.5704	0.5198	0.5064	0.4939	0.4846	0.4798
2.2	0.5644	0.5166	0.5050	0.4936	0.4839	0.4795
2.3	0.5590	0.5135	0.5035	0.4933	0.4831	0.4791
2.4	0.5541	0.5104	0.5020	0.4931	0.4824	0.4788
2.5	0.5494	0.5073	0.5005	0.4928	0.4817	0.4785
2.6	0.5452	0.5042	0.4991	0.4925	0.4810	0.4781
2.7	0.5410	0.5027	0.4976	0.4923	0.4803	0.4778
2.8	0.5376	0.5014	0.4961	0.4920	0.4796	0.4775
2.9	0.5349	0.5002	0.4946	0.4917	0.4788	0.4772
3.0	0.5323	0.4989	0.4941	0.4914	0.4781	0.4768

Table C19: Effective Shading Coefficients of Vertical Projection at Various Angles of Inclination

Orientation: South-East & South-West

R_2	0°	10°	20°	30°	40°	50°
0.1	0.9528	0.9457	0.9396	0.9351	0.9317	0.9304
0.2	0.9081	0.8938	0.8815	0.8724	0.8654	0.8624
0.3	0.8650	0.8437	0.8253	0.8113	0.8005	0.7955
0.4	0.8257	0.7988	0.7746	0.7555	0.7395	0.7307
0.5	0.7907	0.7570	0.7269	0.7029	0.6829	0.6715
0.6	0.7561	0.7153	0.6791	0.6504	0.6264	0.6127
0.7	0.7229	0.6743	0.6313	0.5978	0.5698	0.5539
0.8	0.6897	0.6342	0.5861	0.5629	0.5412	0.5242
0.9	0.6565	0.5987	0.5700	0.5474	0.5235	0.5045
1.0	0.6233	0.5863	0.5584	0.5324	0.5059	0.4850
1.1	0.6056	0.5771	0.5470	0.5185	0.4894	0.4737
1.2	0.5983	0.5685	0.5357	0.5046	0.4792	0.4670
1.3	0.5915	0.5599	0.5244	0.4946	0.4717	0.4627
1.4	0.5853	0.5513	0.5130	0.4882	0.4677	0.4586
1.5	0.5791	0.5427	0.5037	0.4831	0.4642	0.4572
1.6	0.5730	0.5341	0.4966	0.4790	0.4612	0.4557
1.7	0.5668	0.5255	0.4915	0.4771	0.4583	0.4543
1.8	0.5606	0.5169	0.4876	0.4752	0.4577	0.4528
1.9	0.5547	0.5096	0.4836	0.4734	0.4571	0.4514
2.0	0.5499	0.5043	0.4796	0.4715	0.4565	0.4499
2.1	0.5451	0.4990	0.4772	0.4696	0.4558	0.4485
2.2	0.5403	0.4938	0.4757	0.4677	0.4552	0.4471
2.3	0.5355	0.4909	0.4741	0.4662	0.4546	0.4456
2.4	0.5307	0.4879	0.4726	0.4661	0.4540	0.4446
2.5	0.5258	0.4850	0.4711	0.4660	0.4534	0.4443
2.6	0.5210	0.4820	0.4695	0.4659	0.4528	0.4439
2.7	0.5168	0.4790	0.4680	0.4658	0.4522	0.4435
2.8	0.5135	0.4761	0.4665	0.4657	0.4516	0.4432
2.9	0.5110	0.4735	0.4649	0.4656	0.4510	0.4429
3.0	0.5084	0.4715	0.4634	0.4655	0.4504	0.4429

Table C20: Effective Shading Coefficients of Egg-Crate Louvers with Inclined Horizontal Fins

Orientation: North & South

R_1	R_2	0°	10°	20°	30°	40°
0.2	0.2	0.8125	0.8053	0.8011	0.8002	0.8025
0.2	0.4	0.7476	0.7432	0.7409	0.7409	0.7431
0.2	0.6	0.7086	0.7059	0.7047	0.7050	0.7068
0.2	0.8	0.6945	0.6926	0.6917	0.6920	0.6934
0.2	1.0	0.6850	0.6836	0.6829	0.6832	0.6843
0.2	1.2	0.6802	0.6790	0.6785	0.6787	0.6796
0.2	1.4	0.6779	0.6768	0.6764	0.6766	0.6774
0.2	1.6	0.6756	0.6747	0.6743	0.6744	0.6752
0.2	1.8	0.6733	0.6725	0.6722	0.6723	0.6729
0.4	0.2	0.7184	0.7070	0.7002	0.6977	0.6995
0.4	0.4	0.6808	0.6747	0.6716	0.6709	0.6727
0.4	0.6	0.6631	0.6604	0.6593	0.6594	0.6605
0.4	0.8	0.6601	0.6586	0.6581	0.6581	0.6587
0.4	1.0	0.6587	0.6580	0.6578	0.6578	0.6580
0.4	1.2	0.6582	0.6577	0.6577	0.6577	0.6577
0.4	1.4	0.6581	0.6577	0.6577	0.6577	0.6577
0.4	1.6	0.6581	0.6577	0.6577	0.6577	0.6577
0.4	1.8	0.6581	0.6577	0.6577	0.6577	0.6577
0.6	0.2	0.6840	0.6769	0.6728	0.6703	0.6687
0.6	0.4	0.6638	0.6618	0.6608	0.6602	0.6599
0.6	0.6	0.6577	0.6577	0.6577	0.6577	0.6577
0.6	0.8	0.6577	0.6577	0.6577	0.6577	0.6577
0.6	1.0	0.6577	0.6577	0.6577	0.6577	0.6577
0.6	1.2	0.6577	0.6577	0.6577	0.6577	0.6577
0.6	1.4	0.6577	0.6577	0.6577	0.6577	0.6577
0.6	1.6	0.6577	0.6577	0.6577	0.6577	0.6577
0.6	1.8	0.6577	0.6577	0.6577	0.6577	0.6577

Table C20: Effective Shading Coefficients of Egg-Crate Louvers with Inclined Horizontal Fins (Continue)

Orientation: North & South

R_1	R_2	0°	10°	20°	30°	40°
0.8	0.2	0.6740	0.6688	0.6645	0.6622	0.6612
0.8	0.4	0.6609	0.6598	0.6589	0.6584	0.6583
0.8	0.6	0.6577	0.6577	0.6577	0.6577	0.6577
0.8	0.8	0.6577	0.6577	0.6577	0.6577	0.6577
0.8	1.0	0.6577	0.6577	0.6577	0.6577	0.6577
0.8	1.2	0.6577	0.6577	0.6577	0.6577	0.6577
0.8	1.4	0.6577	0.6577	0.6577	0.6577	0.6577
0.8	1.6	0.6577	0.6577	0.6577	0.6577	0.6577
0.8	1.8	0.6577	0.6577	0.6577	0.6577	0.6577
1.0	0.2	0.6681	0.6638	0.6619	0.6603	0.6590
1.0	0.4	0.6595	0.6586	0.6584	0.6581	0.6579
1.0	0.6	0.6577	0.6577	0.6577	0.6577	0.6577
1.0	0.8	0.6577	0.6577	0.6577	0.6577	0.6577
1.0	1.0	0.6577	0.6577	0.6577	0.6577	0.6577
1.0	1.2	0.6577	0.6577	0.6577	0.6577	0.6577
1.0	1.4	0.6577	0.6577	0.6577	0.6577	0.6577
1.0	1.6	0.6577	0.6577	0.6577	0.6577	0.6577
1.0	1.8	0.6577	0.6577	0.6577	0.6577	0.6577
1.2	0.2	0.6651	0.6626	0.6603	0.6584	0.6577
1.2	0.4	0.6588	0.6585	0.6581	0.6578	0.6577
1.2	0.6	0.6577	0.6577	0.6577	0.6577	0.6577
1.2	0.8	0.6577	0.6577	0.6577	0.6577	0.6577
1.2	1.0	0.6577	0.6577	0.6577	0.6577	0.6577
1.2	1.2	0.6577	0.6577	0.6577	0.6577	0.6577
1.2	1.4	0.6577	0.6577	0.6577	0.6577	0.6577
1.2	1.6	0.6577	0.6577	0.6577	0.6577	0.6577
1.2	1.8	0.6577	0.6577	0.6577	0.6577	0.6577

Table C20: Effective Shading Coefficients of Egg-Crate Louvers with Inclined Horizontal Fins (Continue)

Orientation: North & South

R_1	R_2	0°	10°	20°	30°	40°
1.4	0.2	0.6642	0.6613	0.6587	0.6577	0.6577
1.4	0.4	0.6587	0.6583	0.6579	0.6577	0.6577
1.4	0.6	0.6577	0.6577	0.6577	0.6577	0.6577
1.4	0.8	0.6577	0.6577	0.6577	0.6577	0.6577
1.4	1.0	0.6577	0.6577	0.6577	0.6577	0.6577
1.4	1.2	0.6577	0.6577	0.6577	0.6577	0.6577
1.4	1.4	0.6577	0.6577	0.6577	0.6577	0.6577
1.4	1.6	0.6577	0.6577	0.6577	0.6577	0.6577
1.4	1.8	0.6577	0.6577	0.6577	0.6577	0.6577
1.6	0.2	0.6634	0.6601	0.6580	0.6577	0.6577
1.6	0.4	0.6586	0.6581	0.6578	0.6577	0.6577
1.6	0.6	0.6577	0.6577	0.6577	0.6577	0.6577
1.6	0.8	0.6577	0.6577	0.6577	0.6577	0.6577
1.6	1.0	0.6577	0.6577	0.6577	0.6577	0.6577
1.6	1.2	0.6577	0.6577	0.6577	0.6577	0.6577
1.6	1.4	0.6577	0.6577	0.6577	0.6577	0.6577
1.6	1.6	0.6577	0.6577	0.6577	0.6577	0.6577
1.6	1.8	0.6577	0.6577	0.6577	0.6577	0.6577
1.8	0.2	0.6626	0.6589	0.6577	0.6577	0.6577
1.8	0.4	0.6584	0.6579	0.6577	0.6577	0.6577
1.8	0.6	0.6577	0.6577	0.6577	0.6577	0.6577
1.8	0.8	0.6577	0.6577	0.6577	0.6577	0.6577
1.8	1.0	0.6577	0.6577	0.6577	0.6577	0.6577
1.8	1.2	0.6577	0.6577	0.6577	0.6577	0.6577
1.8	1.4	0.6577	0.6577	0.6577	0.6577	0.6577
1.8	1.6	0.6577	0.6577	0.6577	0.6577	0.6577
1.8	1.8	0.6577	0.6577	0.6577	0.6577	0.6577

Table C21: Effective Shading Coefficients of Egg-Crate Louvers with Inclined Horizontal Fins

Orientation: East & West

R_1	R_2	0°	10°	20°	30°	40°
0.2	0.2	0.8482	0.8306	0.8165	0.8064	0.8013
0.2	0.4	0.8212	0.8047	0.7914	0.7818	0.7769
0.2	0.6	0.7942	0.7788	0.7663	0.7572	0.7525
0.2	0.8	0.7672	0.7529	0.7412	0.7327	0.7282
0.2	1.0	0.7417	0.7284	0.7175	0.7095	0.7052
0.2	1.2	0.7190	0.7066	0.6965	0.6890	0.6850
0.2	1.4	0.6968	0.6852	0.6758	0.6688	0.6652
0.2	1.6	0.6786	0.6677	0.6589	0.6524	0.6490
0.2	1.8	0.6626	0.6523	0.6440	0.6379	0.6348
0.4	0.2	0.7513	0.7162	0.6883	0.6678	0.6556
0.4	0.4	0.7323	0.6993	0.6730	0.6535	0.6418
0.4	0.6	0.7133	0.6825	0.6577	0.6393	0.6280
0.4	0.8	0.6943	0.6656	0.6424	0.6251	0.6143
0.4	1.0	0.6754	0.6488	0.6271	0.6108	0.6006
0.4	1.2	0.6570	0.6322	0.6118	0.5967	0.5871
0.4	1.4	0.6389	0.6158	0.5968	0.5827	0.5738
0.4	1.6	0.6235	0.6017	0.5840	0.5708	0.5625
0.4	1.8	0.6096	0.5890	0.5723	0.5599	0.5523
0.6	0.2	0.6768	0.6307	0.5917	0.5611	0.5398
0.6	0.4	0.6626	0.6190	0.5822	0.5532	0.5329
0.6	0.6	0.6483	0.6073	0.5726	0.5452	0.5260
0.6	0.8	0.6341	0.5956	0.5630	0.5372	0.5191
0.6	1.0	0.6198	0.5840	0.5535	0.5293	0.5121
0.6	1.2	0.6056	0.5723	0.5439	0.5213	0.5052
0.6	1.4	0.5915	0.5607	0.5344	0.5134	0.4984
0.6	1.6	0.5788	0.5500	0.5254	0.5058	0.4917
0.6	1.8	0.5668	0.5398	0.5167	0.4983	0.4852

Table C21: Effective Shading Coefficients of Egg-Crate Louvers with Inclined Horizontal Fins (Continue)

Orientation: East & West

R_1	R_2	0°	10°	20°	30°	40°
0.8	0.2	0.6135	0.5615	0.5215	0.4881	0.4622
0.8	0.4	0.6033	0.5537	0.5157	0.4839	0.4593
0.8	0.6	0.5931	0.5459	0.5099	0.4798	0.4564
0.8	0.8	0.5829	0.5381	0.5041	0.4756	0.4534
0.8	1.0	0.5727	0.5304	0.4983	0.4714	0.4505
0.8	1.2	0.5625	0.5226	0.4925	0.4673	0.4476
0.8	1.4	0.5523	0.5148	0.4867	0.4631	0.4447
0.8	1.6	0.5421	0.5070	0.4809	0.4589	0.4418
0.8	1.8	0.5320	0.4992	0.4751	0.4548	0.4389
1.0	0.2	0.5744	0.5178	0.4695	0.4422	0.4212
1.0	0.4	0.5661	0.5123	0.4663	0.4401	0.4201
1.0	0.6	0.5578	0.5068	0.4631	0.4381	0.4191
1.0	0.8	0.5495	0.5014	0.4599	0.4361	0.4180
1.0	1.0	0.5412	0.4959	0.4567	0.4341	0.4170
1.0	1.2	0.5329	0.4904	0.4535	0.4321	0.4159
1.0	1.4	0.5246	0.4849	0.4503	0.4301	0.4149
1.0	1.6	0.5163	0.4795	0.4471	0.4280	0.4138
1.0	1.8	0.5080	0.4740	0.4439	0.4260	0.4128
1.2	0.2	0.5420	0.4791	0.4447	0.4144	0.4033
1.2	0.4	0.5354	0.4754	0.4426	0.4137	0.4030
1.2	0.6	0.5289	0.4717	0.4405	0.4130	0.4027
1.2	0.8	0.5223	0.4680	0.4384	0.4123	0.4024
1.2	1.0	0.5158	0.4643	0.4363	0.4117	0.4021
1.2	1.2	0.5092	0.4606	0.4342	0.4110	0.4018
1.2	1.4	0.5027	0.4569	0.4321	0.4103	0.4015
1.2	1.6	0.4961	0.4532	0.4300	0.4096	0.4012
1.2	1.8	0.4896	0.4495	0.4279	0.4089	0.4009

Table C21: Effective Shading Coefficients of Egg-Crate Louvers with Inclined Horizontal Fins (Continue)

Orientation: East & West

R_1	R_2	0°	10°	20°	30°	40°
1.4	0.2	0.5107	0.4621	0.4220	0.4055	0.3969
1.4	0.4	0.5058	0.4592	0.4210	0.4051	0.3969
1.4	0.6	0.5008	0.4563	0.4200	0.4047	0.3969
1.4	0.8	0.4959	0.4535	0.4190	0.4043	0.3969
1.4	1.0	0.4910	0.4506	0.4180	0.4039	0.3969
1.4	1.2	0.4860	0.4477	0.4170	0.4035	0.3969
1.4	1.4	0.4811	0.4449	0.4160	0.4031	0.3969
1.4	1.6	0.4762	0.4420	0.4150	0.4028	0.3969
1.4	1.8	0.4712	0.4391	0.4140	0.4024	0.3969
1.6	0.2	0.4951	0.4451	0.4117	0.3998	0.3963
1.6	0.4	0.4907	0.4431	0.4110	0.3997	0.3963
1.6	0.6	0.4863	0.4410	0.4103	0.3996	0.3963
1.6	0.8	0.4820	0.4390	0.4096	0.3995	0.3963
1.6	1.0	0.4776	0.4369	0.4089	0.3994	0.3963
1.6	1.2	0.4732	0.4349	0.4083	0.3993	0.3963
1.6	1.4	0.4688	0.4329	0.4076	0.3992	0.3963
1.6	1.6	0.4644	0.4308	0.4069	0.3991	0.3963
1.6	1.8	0.4600	0.4288	0.4062	0.3990	0.3963
1.8	0.2	0.4844	0.4281	0.4075	0.3963	0.3963
1.8	0.4	0.4805	0.4269	0.4070	0.3963	0.3963
1.8	0.6	0.4767	0.4257	0.4065	0.3963	0.3963
1.8	0.8	0.4728	0.4245	0.4061	0.3963	0.3963
1.8	1.0	0.4690	0.4233	0.4056	0.3963	0.3963
1.8	1.2	0.4651	0.4221	0.4051	0.3963	0.3963
1.8	1.4	0.4613	0.4208	0.4047	0.3963	0.3963
1.8	1.6	0.4574	0.4196	0.4042	0.3963	0.3963
1.8	1.8	0.4536	0.4184	0.4037	0.3963	0.3963

Table C22: Effective Shading Coefficients of Egg-Crate Louvers with Inclined Horizontal Fins

Orientation: North-East & North-West

R_1	R_2	0°	10°	20°	30°	40°
0.2	0.2	0.8019	0.7886	0.7788	0.7727	0.7705
0.2	0.4	0.7439	0.7331	0.7250	0.7198	0.7178
0.2	0.6	0.6944	0.6857	0.6790	0.6746	0.6727
0.2	0.8	0.6452	0.6384	0.6332	0.6298	0.6281
0.2	1.0	0.6024	0.5973	0.5935	0.5909	0.5897
0.2	1.2	0.5926	0.5880	0.5844	0.5820	0.5809
0.2	1.4	0.5829	0.5786	0.5754	0.5732	0.5722
0.2	1.6	0.5732	0.5693	0.5663	0.5644	0.5635
0.2	1.8	0.5634	0.5599	0.5573	0.5555	0.5548
0.4	0.2	0.7138	0.6898	0.6709	0.6573	0.6494
0.4	0.4	0.6724	0.6527	0.6371	0.6258	0.6192
0.4	0.6	0.6369	0.6207	0.6079	0.5986	0.5933
0.4	0.8	0.6013	0.5887	0.5787	0.5715	0.5673
0.4	1.0	0.5688	0.5593	0.5519	0.5466	0.5436
0.4	1.2	0.5613	0.5524	0.5455	0.5407	0.5380
0.4	1.4	0.5537	0.5456	0.5392	0.5348	0.5325
0.4	1.6	0.5462	0.5387	0.5329	0.5290	0.5270
0.4	1.8	0.5386	0.5318	0.5266	0.5231	0.5214
0.6	0.2	0.6479	0.6186	0.5951	0.5766	0.5636
0.6	0.4	0.6178	0.5934	0.5741	0.5588	0.5481
0.6	0.6	0.5920	0.5718	0.5560	0.5435	0.5348
0.6	0.8	0.5663	0.5502	0.5379	0.5282	0.5214
0.6	1.0	0.5416	0.5294	0.5204	0.5134	0.5085
0.6	1.2	0.5353	0.5240	0.5159	0.5095	0.5051
0.6	1.4	0.5289	0.5186	0.5113	0.5056	0.5018
0.6	1.6	0.5225	0.5132	0.5067	0.5017	0.4984
0.6	1.8	0.5161	0.5078	0.5022	0.4978	0.4950

Table C22: Effective Shading Coefficients of Egg-Crate Louvers with Inclined Horizontal Fins (Continue)

Orientation: North-East & North-West

R_1	R_2	0°	10°	20°	30°	40°
0.8	0.2	0.6089	0.5719	0.5445	0.5270	0.5133
0.8	0.4	0.5855	0.5551	0.5328	0.5182	0.5067
0.8	0.6	0.5652	0.5403	0.5225	0.5104	0.5010
0.8	0.8	0.5449	0.5255	0.5122	0.5027	0.4952
0.8	1.0	0.5252	0.5109	0.5019	0.4949	0.4895
0.8	1.2	0.5199	0.5070	0.4989	0.4927	0.4879
0.8	1.4	0.5147	0.5030	0.4960	0.4905	0.4863
0.8	1.6	0.5095	0.4991	0.4930	0.4883	0.4847
0.8	1.8	0.5042	0.4952	0.4900	0.4861	0.4831
1.0	0.2	0.5750	0.5440	0.5183	0.5005	0.4878
1.0	0.4	0.5579	0.5321	0.5105	0.4960	0.4856
1.0	0.6	0.5429	0.5218	0.5039	0.4922	0.4839
1.0	0.8	0.5279	0.5114	0.4972	0.4884	0.4822
1.0	1.0	0.5129	0.5010	0.4905	0.4847	0.4805
1.0	1.2	0.5087	0.4981	0.4888	0.4836	0.4799
1.0	1.4	0.5045	0.4952	0.4870	0.4825	0.4793
1.0	1.6	0.5002	0.4922	0.4852	0.4814	0.4787
1.0	1.8	0.4960	0.4893	0.4834	0.4803	0.4781
1.2	0.2	0.5577	0.5232	0.5002	0.4857	0.4802
1.2	0.4	0.5434	0.5144	0.4958	0.4838	0.4795
1.2	0.6	0.5309	0.5069	0.4922	0.4822	0.4787
1.2	0.8	0.5185	0.4994	0.4886	0.4806	0.4780
1.2	1.0	0.5060	0.4919	0.4850	0.4789	0.4773
1.2	1.2	0.5025	0.4900	0.4839	0.4785	0.4771
1.2	1.4	0.4990	0.4880	0.4827	0.4781	0.4769
1.2	1.6	0.4955	0.4860	0.4816	0.4777	0.4767
1.2	1.8	0.4919	0.4840	0.4804	0.4773	0.4765

Table C22: Effective Shading Coefficients of Egg-Crate Louvers with Inclined Horizontal Fins (Continue)

Orientation: North-East & North-West

R_1	R_2	0°	10°	20°	30°	40°
1.4	0.2	0.5424	0.5101	0.4894	0.4815	0.4759
1.4	0.4	0.5303	0.5039	0.4868	0.4805	0.4759
1.4	0.6	0.5199	0.4987	0.4846	0.4796	0.4759
1.4	0.8	0.5095	0.4936	0.4825	0.4786	0.4759
1.4	1.0	0.4991	0.4884	0.4803	0.4777	0.4759
1.4	1.2	0.4963	0.4868	0.4797	0.4774	0.4759
1.4	1.4	0.4935	0.4853	0.4791	0.4772	0.4759
1.4	1.6	0.4907	0.4837	0.4785	0.4770	0.4759
1.4	1.8	0.4879	0.4821	0.4779	0.4767	0.4759
1.6	0.2	0.5310	0.4994	0.4856	0.4777	0.4759
1.6	0.4	0.5208	0.4952	0.4838	0.4774	0.4759
1.6	0.6	0.5122	0.4917	0.4822	0.4771	0.4759
1.6	0.8	0.5036	0.4883	0.4806	0.4768	0.4759
1.6	1.0	0.4949	0.4848	0.4790	0.4765	0.4759
1.6	1.2	0.4926	0.4837	0.4785	0.4764	0.4759
1.6	1.4	0.4902	0.4825	0.4781	0.4763	0.4759
1.6	1.6	0.4879	0.4814	0.4777	0.4762	0.4759
1.6	1.8	0.4855	0.4803	0.4773	0.4761	0.4759
1.8	0.2	0.5221	0.4930	0.4826	0.4759	0.4759
1.8	0.4	0.5137	0.4897	0.4815	0.4759	0.4759
1.8	0.6	0.5067	0.4869	0.4803	0.4759	0.4759
1.8	0.8	0.4997	0.4841	0.4792	0.4759	0.4759
1.8	1.0	0.4926	0.4813	0.4780	0.4759	0.4759
1.8	1.2	0.4906	0.4806	0.4777	0.4759	0.4759
1.8	1.4	0.4885	0.4798	0.4775	0.4759	0.4759
1.8	1.6	0.4864	0.4791	0.4772	0.4759	0.4759
1.8	1.8	0.4843	0.4784	0.4769	0.4759	0.4759

Table C23: Effective Shading Coefficients of Egg-Crate Louvers with Inclined Horizontal Fins

Orientation: South-East & South-West

R_1	R_2	0°	10°	20°	30°	40°
0.2	0.2	0.7951	0.7808	0.7702	0.7634	0.7608
0.2	0.4	0.7351	0.7233	0.7144	0.7087	0.7064
0.2	0.6	0.6842	0.6745	0.6672	0.6623	0.6602
0.2	0.8	0.6340	0.6264	0.6205	0.6167	0.6149
0.2	1.0	0.5838	0.5782	0.5739	0.5710	0.5696
0.2	1.2	0.5669	0.5620	0.5581	0.5555	0.5542
0.2	1.4	0.5570	0.5525	0.5489	0.5465	0.5453
0.2	1.6	0.5471	0.5430	0.5397	0.5375	0.5364
0.2	1.8	0.5372	0.5334	0.5305	0.5285	0.5275
0.4	0.2	0.6979	0.6713	0.6510	0.6365	0.6285
0.4	0.4	0.6555	0.6334	0.6165	0.6044	0.5977
0.4	0.6	0.6193	0.6008	0.5868	0.5768	0.5713
0.4	0.8	0.5831	0.5683	0.5572	0.5492	0.5449
0.4	1.0	0.5469	0.5358	0.5275	0.5216	0.5185
0.4	1.2	0.5361	0.5263	0.5188	0.5135	0.5107
0.4	1.4	0.5286	0.5196	0.5127	0.5078	0.5053
0.4	1.6	0.5212	0.5129	0.5066	0.5022	0.4999
0.4	1.8	0.5137	0.5063	0.5005	0.4965	0.4944
0.6	0.2	0.6266	0.5923	0.5677	0.5483	0.5347
0.6	0.4	0.5959	0.5670	0.5466	0.5305	0.5192
0.6	0.6	0.5694	0.5452	0.5283	0.5150	0.5057
0.6	0.8	0.5430	0.5235	0.5101	0.4996	0.4923
0.6	1.0	0.5166	0.5018	0.4919	0.4842	0.4788
0.6	1.2	0.5091	0.4957	0.4868	0.4798	0.4751
0.6	1.4	0.5030	0.4905	0.4824	0.4761	0.4718
0.6	1.6	0.4969	0.4853	0.4780	0.4723	0.4685
0.6	1.8	0.4907	0.4801	0.4736	0.4685	0.4652

Table C23: Effective Shading Coefficients of Egg-Crate Louvers with Inclined Horizontal Fins (Continue)

Orientation: South-East & South-West

R_1	R_2	0°	10°	20°	30°	40°
0.8	0.2	0.5821	0.5434	0.5133	0.4954	0.4814
0.8	0.4	0.5586	0.5264	0.5016	0.4865	0.4747
0.8	0.6	0.5381	0.5114	0.4912	0.4787	0.4689
0.8	0.8	0.5176	0.4964	0.4808	0.4709	0.4631
0.8	1.0	0.4971	0.4815	0.4705	0.4630	0.4573
0.8	1.2	0.4914	0.4773	0.4675	0.4609	0.4557
0.8	1.4	0.4863	0.4734	0.4646	0.4587	0.4541
0.8	1.6	0.4812	0.4695	0.4616	0.4565	0.4525
0.8	1.8	0.4761	0.4656	0.4587	0.4543	0.4509
1.0	0.2	0.5448	0.5129	0.4864	0.4682	0.4552
1.0	0.4	0.5277	0.5009	0.4786	0.4637	0.4531
1.0	0.6	0.5125	0.4904	0.4719	0.4599	0.4514
1.0	0.8	0.4973	0.4800	0.4652	0.4561	0.4497
1.0	1.0	0.4822	0.4695	0.4585	0.4523	0.4480
1.0	1.2	0.4779	0.4666	0.4566	0.4512	0.4474
1.0	1.4	0.4738	0.4637	0.4548	0.4501	0.4468
1.0	1.6	0.4696	0.4608	0.4530	0.4490	0.4461
1.0	1.8	0.4654	0.4579	0.4512	0.4478	0.4455
1.2	0.2	0.5269	0.4915	0.4679	0.4532	0.4471
1.2	0.4	0.5125	0.4827	0.4636	0.4513	0.4464
1.2	0.6	0.5000	0.4751	0.4600	0.4497	0.4457
1.2	0.8	0.4874	0.4675	0.4564	0.4481	0.4450
1.2	1.0	0.4748	0.4600	0.4528	0.4465	0.4443
1.2	1.2	0.4713	0.4579	0.4516	0.4461	0.4441
1.2	1.4	0.4678	0.4559	0.4504	0.4456	0.4439
1.2	1.6	0.4643	0.4539	0.4493	0.4452	0.4438
1.2	1.8	0.4608	0.4519	0.4481	0.4447	0.4436

Table C23: Effective Shading Coefficients of Egg-Crate Louvers with Inclined Horizontal Fins (Continue)

Orientation: South-East & South-West

R_1	R_2	0°	10°	20°	30°	40°
1.4	0.2	0.5112	0.4781	0.4571	0.4483	0.4429
1.4	0.4	0.4991	0.4719	0.4545	0.4474	0.4429
1.4	0.6	0.4886	0.4668	0.4524	0.4465	0.4429
1.4	0.8	0.4781	0.4616	0.4502	0.4456	0.4429
1.4	1.0	0.4676	0.4564	0.4481	0.4447	0.4429
1.4	1.2	0.4647	0.4548	0.4474	0.4445	0.4429
1.4	1.4	0.4619	0.4532	0.4468	0.4442	0.4429
1.4	1.6	0.4590	0.4516	0.4462	0.4440	0.4429
1.4	1.8	0.4562	0.4500	0.4455	0.4438	0.4429
1.6	0.2	0.4995	0.4672	0.4522	0.4446	0.4429
1.6	0.4	0.4893	0.4631	0.4506	0.4443	0.4429
1.6	0.6	0.4806	0.4597	0.4491	0.4440	0.4429
1.6	0.8	0.4719	0.4563	0.4475	0.4437	0.4429
1.6	1.0	0.4633	0.4529	0.4460	0.4435	0.4429
1.6	1.2	0.4608	0.4517	0.4456	0.4434	0.4429
1.6	1.4	0.4584	0.4505	0.4452	0.4433	0.4429
1.6	1.6	0.4560	0.4493	0.4448	0.4432	0.4429
1.6	1.8	0.4536	0.4481	0.4444	0.4432	0.4429
1.8	0.2	0.4904	0.4609	0.4494	0.4429	0.4429
1.8	0.4	0.4821	0.4576	0.4483	0.4429	0.4429
1.8	0.6	0.4750	0.4549	0.4472	0.4429	0.4429
1.8	0.8	0.4680	0.4521	0.4461	0.4429	0.4429
1.8	1.0	0.4610	0.4493	0.4451	0.4429	0.4429
1.8	1.2	0.4588	0.4485	0.4448	0.4429	0.4429
1.8	1.4	0.4567	0.4477	0.4445	0.4429	0.4429
1.8	1.6	0.4545	0.4470	0.4442	0.4429	0.4429
1.8	1.8	0.4524	0.4462	0.4440	0.4429	0.4429

APPENDIX D

D1 Example of ETTV Calculation for an office building

D1.1 Brief Description of Building

The 25-storey office building consists of a 4-storey rectangular podium and a 21-storey square tower. The building is orientated in the North, East, South and West directions with the front façade facing the south. While all the other façades are exposed to the weather, the west façade of the podium is joined to the neighbouring building by a 230mm brick party wall.

With the exception of the 4th storey open deck which is a landscaped roof garden-cum-café, the other storeys are all centrally air-conditioned. Hence the ETTV calculation covers only the 24 air-conditioned storeys. The basement which houses the car park and plant room is not included in the calculation as it is completely submerged.

The envelope design consists essentially of a flush curtain wall construction with double glazing for the tower block as well as the east and south façades of the podium. The 1st storey facades on the east and south consist of an almost full height glass envelope shaded by a continuous overhang.

Sketch Drawing on Envelope Details

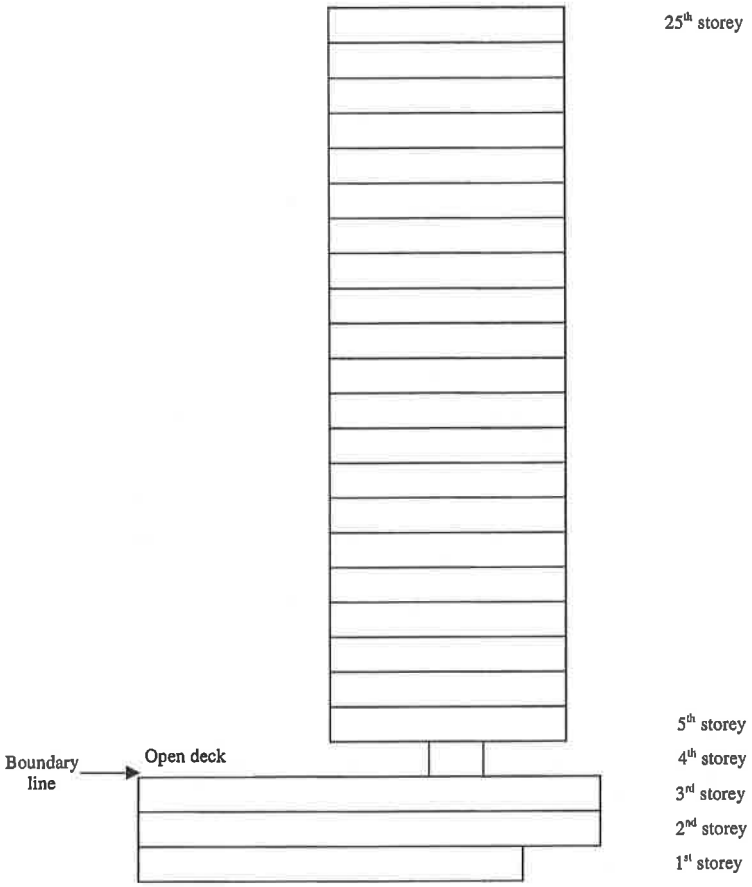

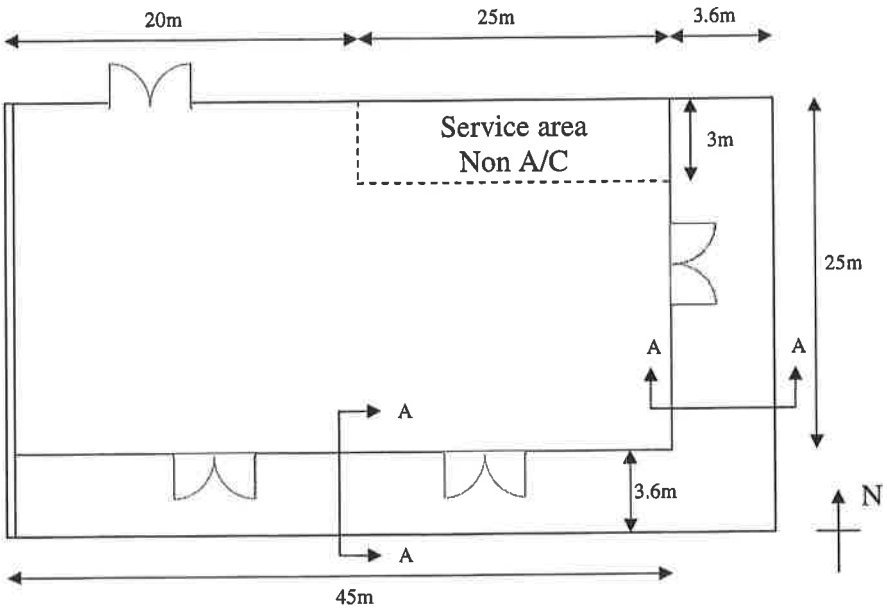

1st STOREY PLAN

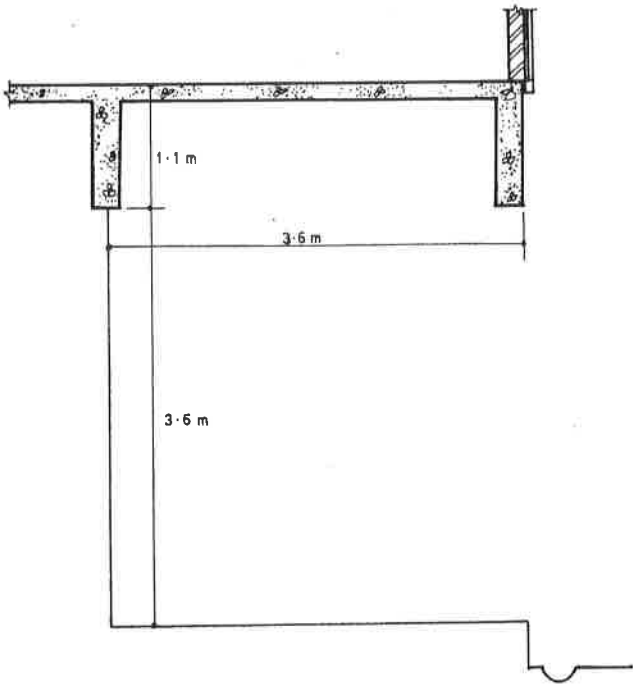

SECTION A - A

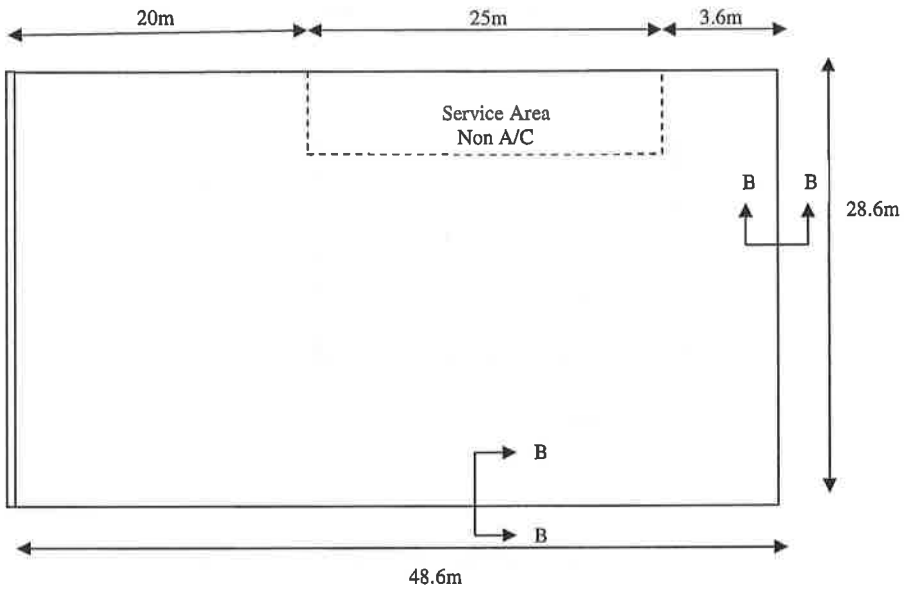

2nd & 3rd STOREY PLAN

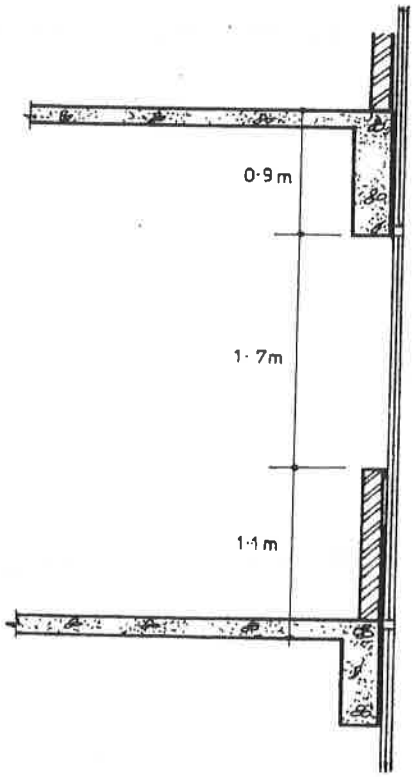

SECTION B - B

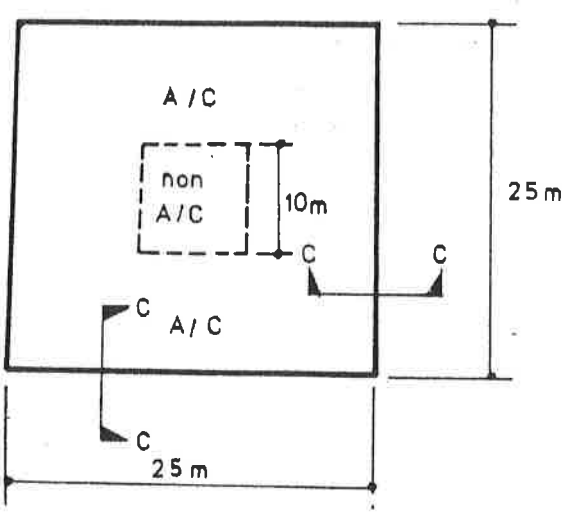

5th - 25th STOREY PLAN

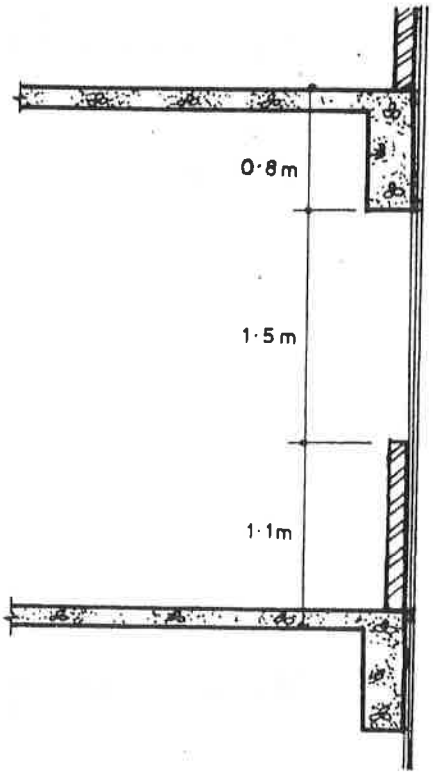

SECTION C – C

D1.2 Envelope Area Calculation

D1.2.1 Podium: 1st Storey

(i) South façade:

(a) Single glazing $Af_1 = 3.6 \times 45 = 162.0m^2$

(b) r.c beam $Aw_1 = 1.1 \times 45 = 49.5m^2$

(ii) East façade:

(a) Single glazing $Af_1 = 3.6 \times (25 - 3) = 79.2m^2$

(b) r.c beam $Aw_1 = 1.1 \times (25 - 3) = 24.2m^2$

(iii) North façade:

(a) 200mm r.c wall $Aw_2 = 4.7 \times 20 = 94.0m^2$

(iv) West façade:

As the 230mm thick brick-wall is a part wall which is not exposed to the outside, it is not included in the calculation.

D1.2.2 Podium: 2nd and 3rd Storeys (2 Storeys)

(i) South facade:

(a) Double glazing $Af_2 = 1.7 \times 48.6 \times 2 = 165.2m^2$

(b) r.c beam with glass cladding $Aw_3 = 0.9 \times 48.6 \times 2 = 87.5m^2$

(c) Brick parapet $Aw_4 = 1.1 \times 48.6 \times 2 = 106.9m^2$

(ii) East facade:

(a) Double glazing $Af_2 = 1.7 \times 28.6 \times 2 = 97.2m^2$

(b) r.c beam with glass cladding $Aw_3 = 0.9 \times 28.6 \times 2 = 51.5m^2$

(c) Brick parapet $Aw_4 = 1.1 \times 28.6 \times 2 = 62.9m^2$

(iii) North facade:

(a) 200mm r.c wall $Aw_2 = 3.7 \times (20 + 3.6) \times 2 = 74.6m^2$

(iv) West facade:

Similar to D1.2.1 (iv)

D1.2.3 Tower Block: 5th to 25th Storeys (21 Storeys)

(i) South facade:

(a) Double glazing Af_2 = 1.5 x 25 x 21 = 787.5m^2

(b) r.c beam with glass cladding Aw_3 = 0.8 x 25 x 21 = 420.0m^2

(c) Brick parapet Aw_4 = 1.1 x 25 x 21 = 577.5m^2

(ii) East facade:

Similar to D1.2.3 (i) above

(iii) North facade:

Similar to D1.2.3 (i) above

(iv) West facade:

Similar to D1.2.3 (i) above

Summary of Envelope Area

Facade Orientation	Podium 1st Storey	Podium 2nd and 3rd Storeys	Tower 5th - 25th Storeys	Total
South	Single glazing Af_1= 162.0m^2 r.c beam Aw_1=49.5m^2	Double glazing Af_2= 165.2m^2 r.c beam with glass cladding Aw_3 = 87.5m^2 Brick parapet with glass cladding Aw_4= 106.9m^2	Double glazing Af_2= 787.5m^2 r.c beam with glass cladding Aw_3= 420.0m^2 Brick parapet Aw_4= 577.5m^2	Af_1= 162.0m^2 Af_2= 952.7m^2 Aw_1=49.5m^2 Aw_3= 507.5m^2 Aw_4= 684.4m^2 **A_o=2356.1m^2**
East	Single glazing Af_1 =79.2m^2 r.c beam Aw_1= 24.2m^2	Double glazing Af_2= 97.2m^2 r.c beam with Aw_3=51.5m^2 glass cladding Brick parapet Aw_4= 62.9m^2	Double glazing Af_2= 787.5m^2 r.c beam with glass cladding Aw_3= 420.0m^2 Brick parapet Aw_4= 577.5m^2	Af_1= 79.2m^2 Af_2= 884.7m^2 Aw_1=24.2m^2 Aw_3= 471.5m^2 Aw_4= 640.4m^2 **A_o=2100m^2**

North	r.c wall Aw_2= 94m^2	r.c wall Aw_2= 174.6m^2	Double glazing Af_2= 787.5m^2 r.c beam with glass cladding Aw_3= 420.0m^2 Brick parapet Aw_4= 577.5m^2	Af_2= 787.5m^2 Aw_2=268.6m^2 Aw_3= 420.0m^2 Aw_4= 577.5m^2 **A_o=2053.6m^2**
West	-	-	Double glazing Af_2= 787.5m^2 r.c beam with glass cladding Aw_3= 420.0m^2 Brick parapet Aw_4= 577.5m^2	Af_2= 787.5m^2 Aw_3= 420.0m^2 Aw_4= 577.5m^2 **A_o=2356.1m^2**

D1.3 U-Value Calculation

D1.3.1 Podium: 1st Storey

(a) 8mm single glazing (South & East Facades)

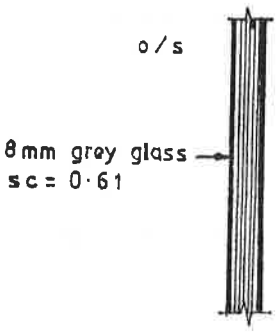

$$R = 0.044 + \frac{0.008}{1.053} + 0.12 = 0.172 m^2K/W$$

$$U = \frac{1}{R} = 5.82 W/m^2K$$

SC_g = 0.61 (by manufacturer)

(b) 250mm r.c beam (South and East facades)

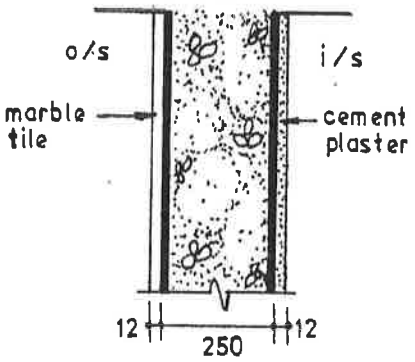

$$R = 0.044 + \frac{0.012}{1.298} + \frac{0.250}{1.442} + \frac{0.012}{0.533} + 0.12 = 0.369 m^2K/W$$

$$U = \frac{1}{R} = 2.71 W/m^2K$$

(c) 200mm r.c beam (North facades)

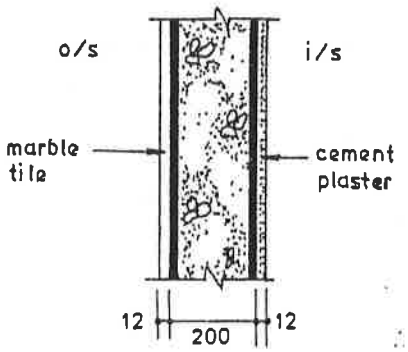

$$R = 0.044 + \frac{0.012}{1.298} + \frac{0.200}{1.442} + \frac{0.012}{0.533} + 0.12 = 0.334 m^2K/W$$

$$U = \frac{1}{R} = 2.99 W/m^2K$$

D1.3.2 Podium: 2nd & 3rd Storeys

(a) Double glazing (South & East Facades)

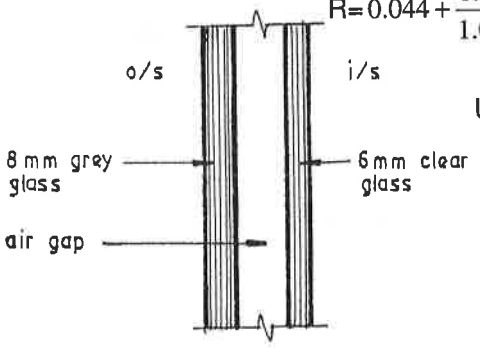

$$R = 0.044 + \frac{0.008}{1.053} + 0.16 + \frac{0.008}{1.053} + 0.12 = 0.337 m^2K/W$$

$$U = \frac{1}{R} = 2.96 W/m^2K$$

SC_g = 0.47 (by manufacturer)

(b) 250mm r.c beam with glass cladding (South and East facades)

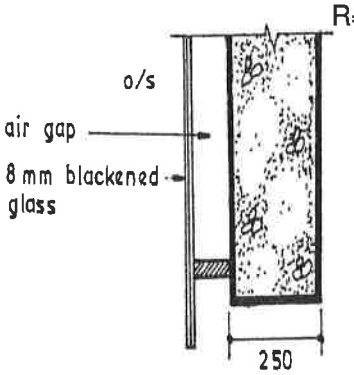

$$R = 0.044 + \frac{0.012}{1.053} + 0.16 + \frac{0.250}{1.442} + 0.12 = 0.505 m^2K/W$$

$$U = \frac{1}{R} = 1.98 W/m^2K$$

(c) 115mm brick parapet with glass cladding (South & East facades)

$$R = 0.044 + \frac{0.008}{1.053} + 0.16 + \frac{0.200}{1.442} + \frac{0.115}{0.807} + \frac{0.012}{0.533} + 0.12 = 0.519 m^2K/W$$

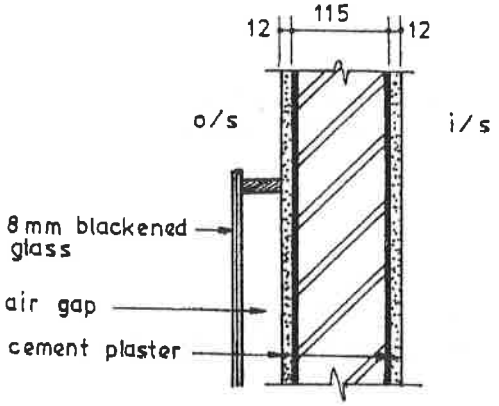

$$U = \frac{1}{R} = 1.93 W/m^2K$$

(d) 200mm r.c wall (North (c))

Same as D1.3.1 (c)

D1.3.3 Tower: 5th -25th Storeys

(a) Double glazing (all facades)

Same as D1.3.2 (a)

(b) 250mm r.c beam with glass cladding (all facades)

Same as D1.3.2 (b)

(c) 115mm brick parapet with glass cladding (all facades)

Same as D1.3.2 (c)

D1.4 Overhang

For 1st Storey only (South & East facades)

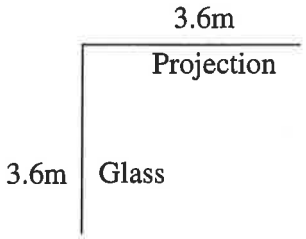

$$R_1 = \frac{P}{H} = \frac{3.6}{3.6} = 1.0$$

From Tables C12 & C13

SC_{ef} = 0.68 (South)
= 0.58 (East)

D1.5 ETTV Calculation

General Equation
$ETTV = 1/ A_o [12(A_w \times U_w) + 3.4(A_f \times U_f) + 211 \times CF (A_f \times SC)]$

D1.5.1 South façade (CF =0.58)

$ETTV_S = 1/2356.1[12(49.5\times2.7+507.5\times1.98+684.4\times1.93) + 3.4 (162\times5.82 + 952.7\times2.96) +211\times0.58(162\times0.61\times0.68+ 952.7\times0.47)]$
$= 44.7\ W/m^2$

D1.5.2 East facade (CF =0.77)

$ETTV_E = 1/2100[12(24.2\times2.71+471.5\times1.98+640\times1.93) +3.4(79.2\times5.82+ 884.7\times2.96) +211\times0.77(79.2\times0.61\times0.58 + 884.7\times0.47)]$
$= 52.1W/m^2$

D1.5.3 North facade (CF =0.57)

$ETTV_N = 1/2053.6[12(268.6\times2.99+420\times1.98+577.5\times1.93) +3.4(787.5\times2.96) + 211\times0.57(787.5\times0.47)]$
$= 41.6W/m^2$

D1.5.4 West façade (CF =0.87)

$ETTV_W = 1/1785[12(420\times1.98+577.5\times1.93) +3.4(787.5\times2.96) + 211\times0.87(787.5\times0.47)]$

$= 55.6W/m^2$

D1.5.5 Overall for Whole Building

$ETTV = (44.7\times2356.1+52.1\times2100+41.6\times2053.6+55.6\times1785) / (2356.1+2100+2053.6+1785)$
$= 48.2\ W/m^2$

APPENDIX E

E1 Example of RETV Calculation

E1.1 Brief Description of Building

The 12-storey residential building is a point block. The block has a symmetrical cross section and its four facades face the North, South, East and West orientation. It has a floor-to-floor height of 3.2 m. Each storey houses 4 apartments, each with 150 m^2 of space. Within each apartment are 2 bedrooms of different floor areas, living, dining, a toilet and a kitchen. Both the toilet and the kitchen are non-conditioned. The living and dining occupies a space of 72 m^2.The bigger bedroom occupies a space of 36 m^2 within the apartment while the smaller bedroom occupies 16 m^2. The toilet occupies a space of 6 m^2 and the kitchen has a floor space of occupies 20 m^2. The floor plan is identical for each of the building's 12 storeys.

The envelope design makes up essentially of 150mm thk prefab walls. All the bedroom windows are with 8mm thk single glazed clear glass. The full height double glazed windows at living area are 24mm thk. The dining windows are 12mm thk single glazed clear glass.

E1.2 Building Floor Plan and Perspective Sketch Drawing on Envelope Details

The perspective, elevations and plan views of the building are shown in the figures below.

Perspective of Building

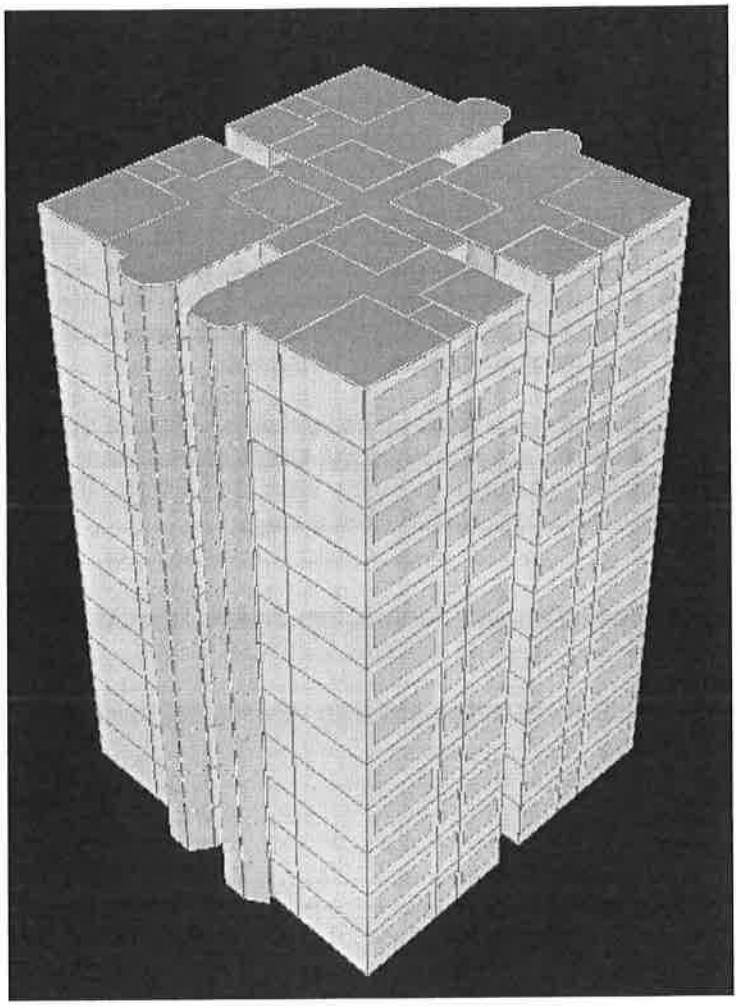

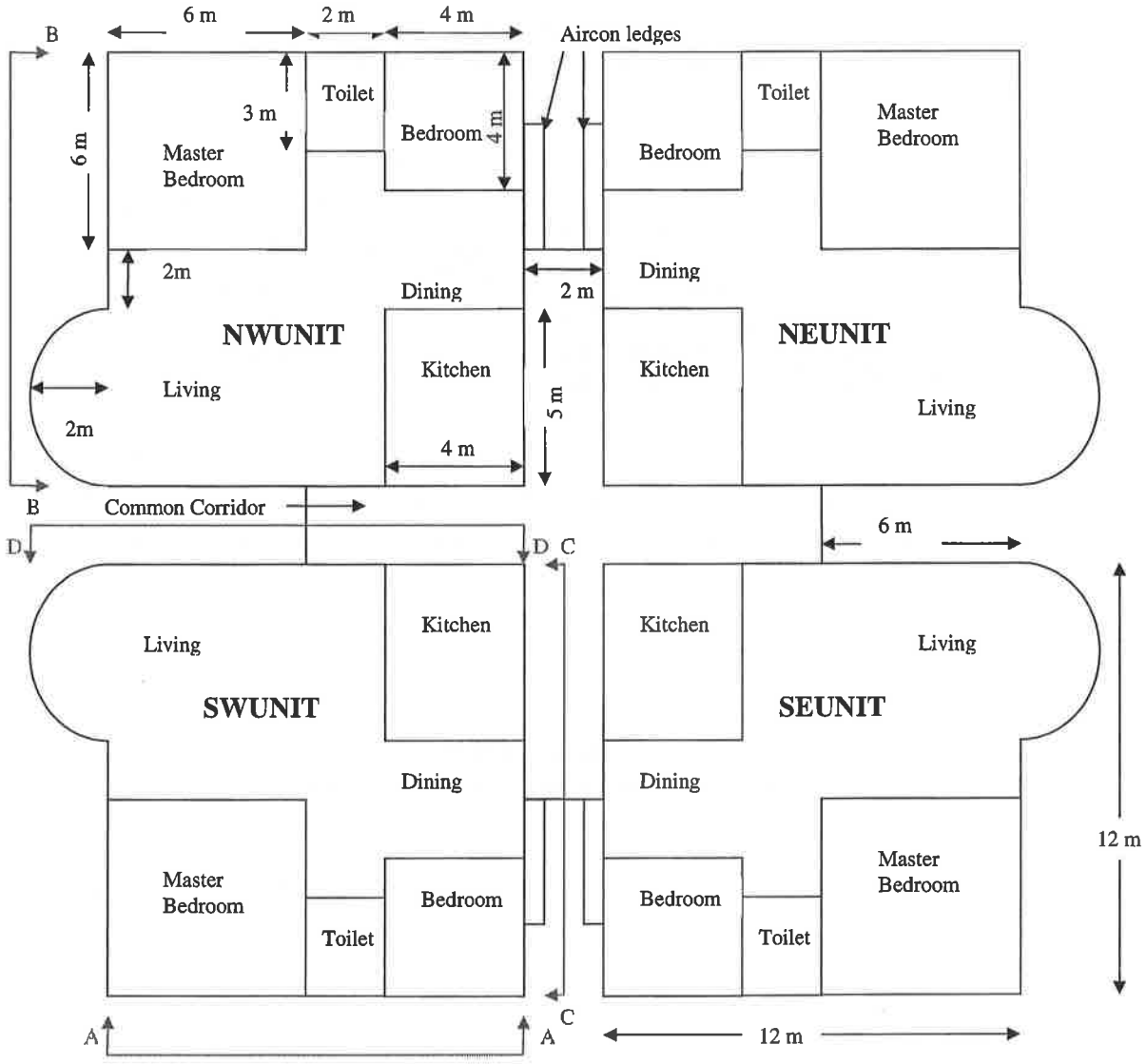

Plan View of Building

Exterior walls of toilet and kitchen are not included in RETV calculations

Elevation A-A
(For each typical apartment at each level)

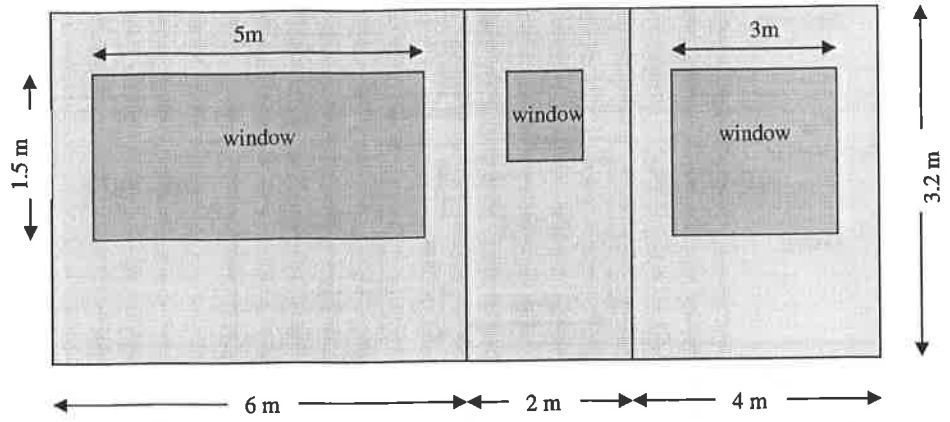

Elevation B-B
(For each typical apartment at each level)

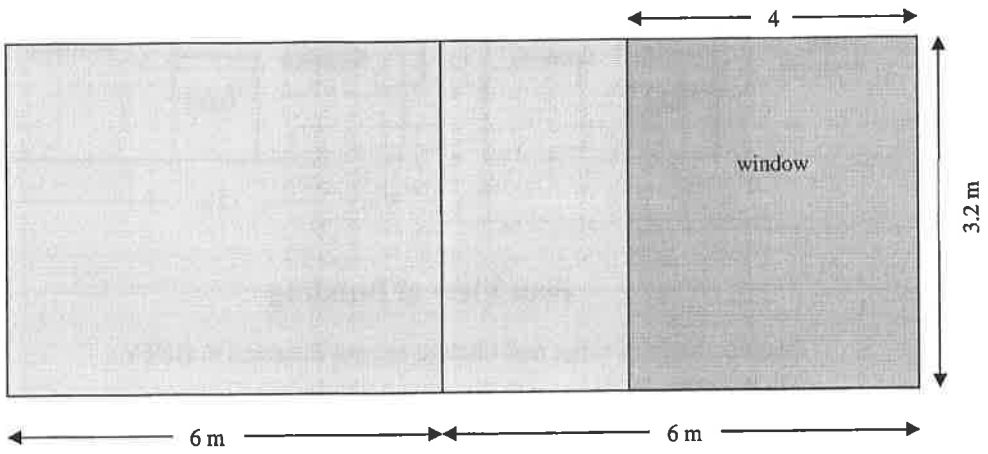

Elevation C-C
(For each typical apartment at each level)

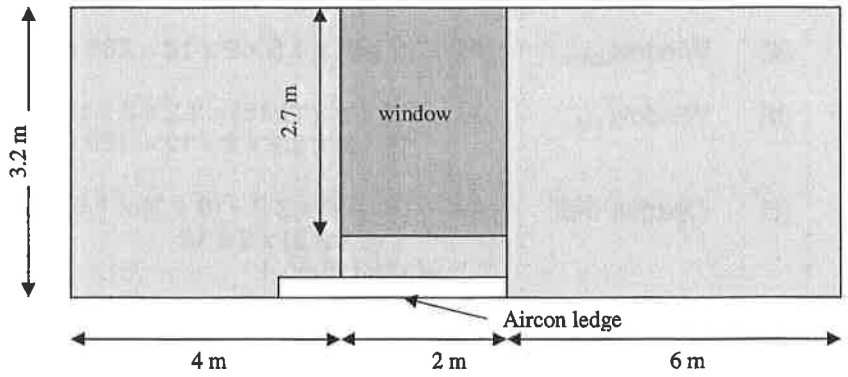

Elevation D-D
(For each typical apartment at each level)

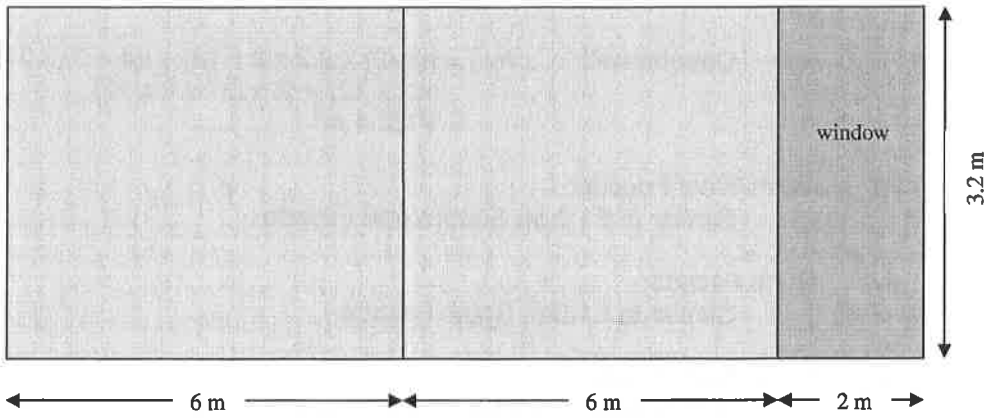

E1.3 Envelope Area Calculation

Note: Exterior walls of toilet and kitchen are not included in RETV calculations.

(i) South Facade (*incls the south facade of unit NWUNIT & NEUNIT*):

(a) Window $_{bdrm}$ $Af_1 = (5 + 3) \times 1.5 \times 2 \times 12 = 288\ m^2$

(b) Window $_{Liv}$ $Af_2 = [(2 \times \pi \times 2)/16] \times 3.2 \times 2 \times 12 + [(2 \times \pi \times 2)/16] \times 3.2 \times 2 \times 12 = 120.64\ m^2$

(c) Opaque wall $Aw_1 = [(6 + 4) \times 3.2 - (5 + 3) \times 1.5] \times 2 \times 12 + (8 \times 3.2) \times 2 \times 12 = 1094.4\ m^2$

(ii) South-West Facade:

(a) Window $_{Liv}$ $Af_2 = [(2 \times \pi \times 2) \times 2/16] \times 3.2 \times 2 \times 12 = 120.64\ m^2$

(iii) West Facade *(incls the west facade of unit NEUNIT & SEUNIT)*:

(a) Window $_{Liv}$ $Af_2 = [(2 \times \pi \times 2) \times 2/16] \times 3.2 \times 2 \times 12 = 120.64\ m^2$

(b) Window $_{Din}$ $Af_3 = 2 \times 2.7 \times 2 \times 12 = 129.6\ m^2$

(c) Opaque wall $Aw_1 = [(6+2) \times 3.2 \times 2 \times 12] + [(4 + 3) \times 3.2 \times 2 \times 12] - (2 \times 2.7 \times 2 \times 12) = 1022.4\ m^2$

(vi) North-West Facade:
Similar to E1.3 (ii) South-West Facade

(iv) North Facade:
Similar to E1.3 (i) South Facade

(vi) North-East Facade:
Similar to E1.3 (ii) South-West Facade

(v) East Facade:
Similar to E1.3 (iii) West Facade

(vi) South-East Facade:
Similar to E1.3 (ii) South-West Facade

Summary of Envelope Area

Facade Orientation	1st to 12th Storeys		Total
South	Window $_{bdrm}$ Window $_{Liv}$ Opaque wall	$Af_1 = 288\ m^2$ $Af_2 = 120.64m^2$ $Aw_1 = 1094.4\ m^2$	$Af_1 = 288\ m^2$ $Af_2 = 120.64m^2$ $Aw_1 = 1094.4\ m^2$ $A_o = 1503.04\ m^2$
South-West	Window $_{Liv}$	$Af_2 = 120.64\ m^2$	$Af_2 = 120.64\ m^2$ $A_o = 120.64\ m^2$
West	Window $_{Liv}$ Window $_{Din}$ Opaque wall	$Af_2 = 120.64\ m^2$ $Af_3 = 129.6\ m^2$ $Aw_1 = 1022.4\ m^2$	$Af_2 = 120.64\ m^2$ $Af_3 = 129.6\ m^2$ $Aw_1 = 1022.4\ m^2$ $A_o = 1272.64\ m^2$
North-West	Glass wall	$Af_2 = 120.64\ m^2$	$Af_2 = 120.64\ m^2$ $A_o = 120.64\ m^2$
North	Window $_{bdrm}$ Window $_{Liv}$ Opaque wall	$Af_1 = 288\ m^2$ $Af_2 = 120.64\ m^2$ $Aw_1 = 1094.4\ m^2$	$Af_1 = 288\ m^2$ $Af_2 = 120.64\ m^2$ $Aw_1 = 1094.4\ m^2$ $A_o = 1503.04\ m^2$
North-East	Window $_{Liv}$	$Af_2 = 120.64\ m^2$	$Af_2 = 120.64\ m^2$ $A_o = 120.64\ m^2$
East	Window $_{Liv}$ Window $_{Din}$ Opaque wall	$Af_2 = 120.64\ m^2$ $Af_{1D} = 129.6\ m^2$ $Aw_1 = 1022.4\ m^2$	$Af_2 = 120.64\ m^2$ $Af_3 = 129.6\ m^2$ $Aw_1 = 1022.4\ m^2$ $A_o = 1272.64\ m^2$
South-East	Window $_{Liv}$	$Af_2 = 120.64\ m^2$	$Af_2 = 120.64\ m^2$ $A_o = 120.64\ m^2$

E1.4 U-Value Calculation

(a) 8mm single glazing (for all the bedroom's windows)

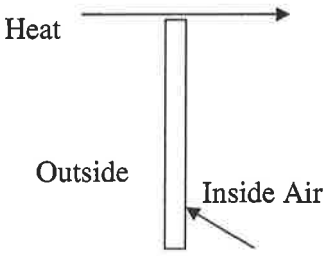

Component	b/k	R
Outside air film		0.044
8mm thk glass	0.008/1.053	0.0076
Inside air flim		0.12
Total R		0.172

U = 1/R = 5.82 W/m^{2}K
SC = 0.7 (by manufacturer)

(b) 24mm tempered glass wall (for all living windows)

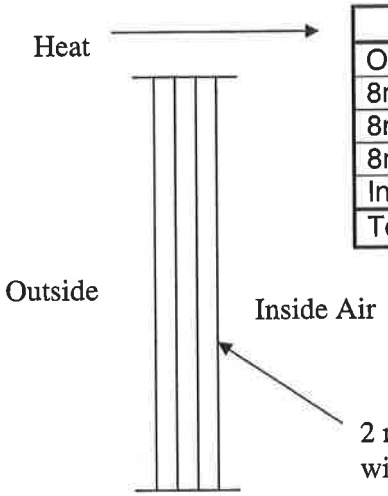

Component	b/k	R
Outside air film		0.044
8mm thk glass	0.008/1.053	0.0076
8mm air gap		0.118
8mm thk glass	0.008/1.053	0.0076
Inside air flim		0.12
Total R		0.290

$U = 1/R = 3.448\ W/m^2K$

SC = 0.5 (by manufacturer)

(c) 12mm single glazed tempered dining window with aircon ledge as shading device.

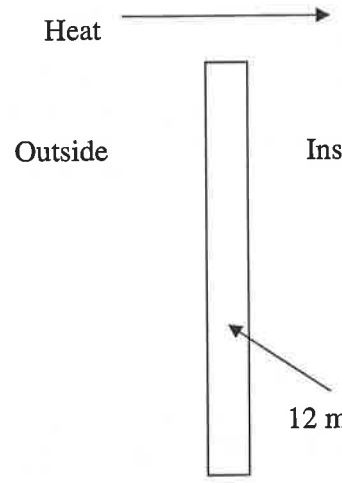

Component	b/k	R
Outside air film		0.044
12mm thk glass	0.012/1.053	0.0114
Inside air flim		0.12
Total R		0.175

$U = 1/R = 5.7\ W/\ m^2K$

SC = 0.61 (By manufacturer)

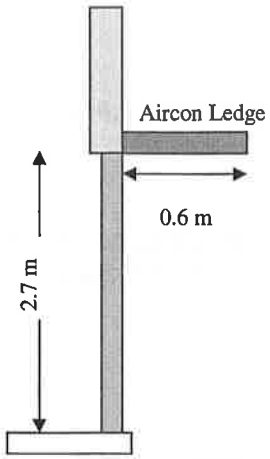

Since R_1 = P/H = 0.6/(2.7) = 0.2222
and $\Phi_1 = 0°$

For East or West orientation, from Table C13,

SC of external shading device = 0.8742

Overall SC for this window
with shading device = 0.61 x 0.8742 = 0.533

(d) 150mm thk prefab wall (2400kg/m3) with 5 mm thk plaster on outside and 15 mm thk on the inside

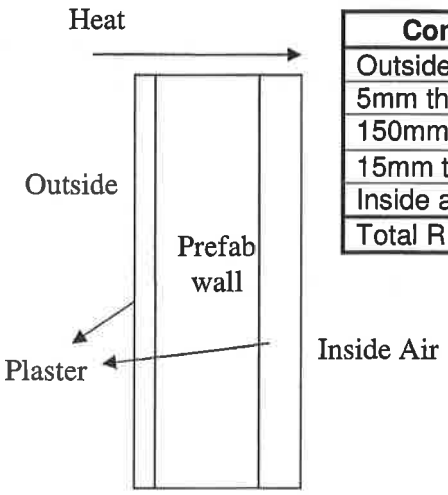

Component	b/k	R
Outside air film		0.044
5mm thk plaster	0.005/0.533	0.0094
150mm thk prefab	0.15/1.442	0.104
15mm thk plaster	0.015/0.533	0.0281
Inside air flim		0.12
Total R		0.306

U = 1/R = 3.27 W/ m^2K

E1.5 RETV Calculation

General Equation
$RETV = 3.4(A_w \times U_w)/A_o + 1.3(A_f \times U_f)/A_o + 58.6(A_f \times SC_f) \times CF/A_o$

E1.5.1 South facade (CF = 0.86)

$RETV = 3.4(1094.4 \times 3.27)/1503.04 + 1.3(288x5.83 + 120.64 x3.448)/1503.04 + 58.6(288x0.7 + 120.64 x0.5) \times 0.86/1503.04$
$= 8.095 + 1.812 + 8.782$
$= 18.69 \text{ W/ m}^2$

E1.5.2 South-West facade (CF = 1.09)

$RETV = 0 + 1.3(120.64 \times 3.448)/120.64 + 58.6(120.64 x0.5)x1.09/120.64$
$= 0+ 4.482 + 31.937$
$= 36.419 \text{ W/ m}^2$

E1.5.3 West facade (CF = 1.26)

$RETV = 3.4(1022.4 \times 3.27)/1272.64 + 1.3(120.64x3.448 + 129.6x5.7)/1272.64 + 58.6(120.64 \times 0.5 + 129.6x0.533)x1.26/1272.64$
$= 8.932 + 1.18 + 7.507$
$= 17.619 \text{ W/ m}^2$

E1.5.4 North-West facade (CF = 1.06)

$RETV = 0 + 1.3(120.64 \times 3.448)/120.64 + 58.6(120.64 x0.5)x1.06/120.64$
$= 0+ 4.482 + 31.058$
$= 35.54 \text{ W/ m}^2$

E1.5.5 North facade (CF = 0.83)

$RETV = 3.4(1094.4 \times 3.27)/1503.04 + 1.3(288x5.83 + 120.64 x3.448)/1503.04 + 58.6(288x0.7 + 120.64 x0.5) \times 0.83/1503.04$
$= 8.095 + 1.477 + 8.476$
$= 18.048 \text{ W/ m}^2$

E1.5.6 North-East facade (CF = 1.01)

$RETV = 0 + 1.3(120.64 \times 3.448)/ 120.64 + 58.6(120.64 x0.5)x1.01/120.64$
$= 0+ 4.482 + 29.593$
$= 34.075 \text{ W/ m}^2$

E1.5.7 East facade (CF = 1.18)

RETV = 3.4(1022.4 x 3.27)/1272.64 + 1.3(120.64x3.448 + 129.6x5.7)/ 1272.64 + 58.6(120.64 x 0.5 + 129.6x0.533)x1.18/1272.64
= 8.932 + 1.18 + 7.031
= 17.143 W/ m^2

E1.5.8 South-East facade (CF = 1.02)

RETV = 0 + 1.3(120.64 x 3.448)/ 120.64 + 58.6(120.64 x0.5)x1.02/120.64
= 0+ 4.482 + 29.886
= 34.368 W/ m^2

E1.5.9 RETV for the whole residential building

$$RETV = \frac{A_{o1} \times RETV_1 + A_{o2} \times RETV_2 + \ldots + A_{on} + RETV_n}{A_{o1} + A_{o2} + \ldots + A_{on}}$$

where

A_{o1}, A_{o2}, A_{on}: gross areas of the exterior wall for each orientation (m^2)

RETV = (1503.04 x 18.69 + 120.64 x 36.419 + 1272.64 x 17.619 + 120.64 x 35.54 + 1503.04 x 18.048 + 120.64 x 34.075 + 1272.64 x 17.143 + 120.64 x 34.368)/ (1503.04 + 120.64 + 1272.64 + 120.64 + 1503.04 + 120.64 + 1272.64 + 120.64)
= 116396.29/6033.92
= 19.29 W/ m^2

APPENDIX F

F1 Bibliography

Chou, S.K., Liew, H.T., Ko, J.R. and Goh, A. "Envelope Thermal Transfer Value criterion for buildings in Singapore", Project report, June 2007, Building and Construction Authority, Singapore, (2007).

Chou, S.K and Lee, Y.K. "A simplified overall thermal transfer value equation for building envelopes". *Energy*, 13, 657-670 (1988).

Chou, S.K and Chang, W.L. "A generalized methodology for determining the total heat gain through building envelopes". *International Journal of Energy Research*, 20, 887-901 (1996).

Commissioner of Building Control, "Guidelines on Envelope Thermal Transfer Value for Buildings", Ver 1.01 2004, Building and Construction Authority, Singapore (2004).

Public Works Department. "Handbook on Energy Conservation in Buildings and Building Services", Development and Building Control Division Publication, Ministry of National Development, Singapore (1983).