

CONSULTANT KIT | 2016

Thermal Management

EMERSON™
Network Power



MAKING THE FUTURE OF YOUR BUSINESS POSSIBLE

Emerson Network Power is the world's leading provider of critical infrastructure technologies and services for IT information and communications systems.

Software

Trellis: Dynamic Infrastructure Optimization Platform

Unified Infrastructure

- Integrated Modular Solutions: Rapid Deployment of Unified Infrastructure for Greater Efficiency
- Smart Solutions: Intelligent, Integrated infrastructure for the Data Center

Thermal Management

- iCOM Controls: Intelligent Cooling Control Technology
- Room, Rack and Row Cooling Solutions
- Rack and Row High Density Applications
- Custom Air Handling Units
- Free-cooling chillers

Power Management

- AC Power: UPS for desktop and large facility applications & Rack and room PDU
- DC Power: HVDC, Converter Systems, Rectifiers and Batteries and Accessories
- Industrial Power: AC UPS, Rectifiers and Inverters, Diagnostics and Monitoring, Integrated Power protection systems

IT Management

- Serial Consoles
- Remote management: High performance KVM switches and softwares
- Local Management: LCD console tray and KVM solutions

Service and Consulting

- Project Management: Commissioning, Engineering services, code compliance
- Maintenance: Preventive & corrective, remote monitoring, repair and spare parts
- Performance: Engineering and assessment, Inspection and safety compliance, battery replacements

We believe in creating relationships with our customers that are built on a foundation of market knowledge, a focus on quality, and a commitment to help our customers make the future of their business possible.

Email: **Marketing.AP@emerson.com** | Website: **www.EmersonNetworkPower.Asia**

EmersonNetworkPower @EmersonNP_AP Emerson Network Power

EMERSON Network Power

EMERSON. CONSIDER IT SOLVED.™

This page is intentionally left blank.

Thermal Management

Company Profile

About Emerson Network Power

Emerson Network Power, a business of Emerson (NYSE:EMR), is the world's leading provider of critical infrastructure technologies and life cycle services for information and communications technology systems. With an expansive portfolio of intelligent, rapidly deployable hardware and software solutions for power, thermal and infrastructure management, Emerson Network Power enables efficient, highlyavailable networks. Learn more at www.EmersonNetworkPower.Asia.

About Emerson

Emerson (NYSE: EMR), based in St. Louis, Missouri (USA), is a global leader in bringing technology and engineering together to provide innovative solutions for customers in industrial, commercial, and consumer markets around the world. The company is comprised of five business segments: Process Management, Industrial Automation, Network Power, Climate Technologies, and Commercial & Residential Solutions. Sales in fiscal 2015 were $22.3 billion. For more information, visit Emerson.com.

Why Choose Emerson Network Power?

Mission-Critical Solutions
Emerson Network Power offers the broadest product portfolio from Grid to Chip that is unmatched in the regional and global market.

Extensive Service Coverage in Asia Pacific
Emerson Network Power has service offices located in 12 countries with more than 350 service engineers. We are equipped with a strong technical support network and multi-tiered parts availability.

Talent and Knowledge Pool
We are backed by the industry's most experienced service associates and factory trained engineers that can provided high level on-site technical support.

Total Service Solution across Mission-Critical Infrastructure
Our service helps minimize potential downtime in your mission-critical facility. It can also increase performance and overall system reliability, extend the useful life of your equipment, and ensure system optimization. This service includes availability assessments, maintenance agreements, professional management and performance monitoring and full service range covering all product lines.

Customer Focus
Our service programs are tailored to ensure that our customers' requirements are met. Our customer- centric programs include customer relationship management, satisfaction surveys, customized solutions from small to large size businesses and even customer advocacy on energy optimization efforts.

About This Document

History of this Document

Historically, Emerson has offered individual Product Manuals to key Customers and Consulting Engineers. These documents have taken on a variety of forms but have always been constructed with the intention of providing current and useful information. Data selection has been made with respect to the specification and installation of the described product so as to facilitate the appropriate selection of the Emerson solution.

The approach to information dissemination has evolved along with the general shift towards digital formats, however print versions continue to be utilized by sub sets of customers and more broadly within Consulting Engineering firms.

2016 Edition

This current edition sets out to meet the needs of this audience with two specific requirements in mind. Firstly to provide easily accessible information and then secondly to take into account the need for revisions that are made post print and prior to the next edition.

This document contains a selection of material deemed to be most critical to selection of an Emerson Solution but it is acknowledged as an excerpt from a broader data set. This shapes the final format of this edition, namely a shortened version of key documents but with clear references to the full unabridged document online.

Final Format and Environmental Considerations

This product manual is intended to be an annual edition and will be revised and reprinted in the first calendar quarter of each year. Emerson takes every effort to limit the scale of the document to minimize paper usage. The black and white format on this specific paper weight and quality reflects a deliberate decision to minimize material consumed in this resource.

Further to this, Emerson will continually canvass customers to track evolving preferences for content delivery apropos print versus online delivery.

Document Structure

Each product contained in this document is described through 4 sub sections.

Product Brochure	(abridged)
Guide Specification	(unabridged)
Technical Specification	(excerpt)
Submittal Drawings	(excerpt)

If you have questions, comments, or concerns please contact your local Emerson Network Power representative or send us an email at **Marketing.ap@emerson.com**

Table of Contents

AC Power

Rack and Row Cooling	.....	Knurr DCD Brochure	.....	13
Rack and Row Cooling	.....	Liebert DM Brochure	.....	21
Rack and Row Cooling	.....	Liebert CRV300mm Brochure Guide Specification Technical Specification	.....	31
Rack and Row Cooling	.....	Liebert XDV Brochure Guide Specification Technical Specification Submittal Drawing	.....	67
Rack and Row Cooling	.....	Liebert XDH Brochure Guide Specification Technical Specification Submittal Drawing	.....	75
Rack and Row Cooling	.....	Liebert XDO Brochure Guide Specification Technical Specification Submittal Drawing	.....	83
Rack and Row Cooling	.....	Liebert XDR Brochure	.....	93
Rack and Row Cooling	.....	Liebert XDP Brochure Guide Specification Submittal Drawing	.....	95
Rack and Row Cooling	.....	Liebert XDC Brochure Guide Specification Submittal Drawing	.....	103
Rack and Row Cooling	.....	Liebert HPS Brochure	.....	111
Rack and Row Cooling	.....	Liebert HPF Brochure	.....	113
Rack and Row Cooling	.....	Liebert HPW Brochure	.....	115

Table of Contents
AC Power

Room Cooling	.....	Liebert PEX (Large Frame) Brochure Guide Specification Technical Specification Submittal Drawing	 127
Room Cooling	.....	Liebert PEX R410A Brochure	 159
Room Cooling	.....	Liebert PEX+ B rochure Guide Specification	 175
Room Cooling	.....	Liebert PCW Brochure	 199
Room Cooling	.....	Liebert PDX Brochure	 207
Air Handling Units	.....	Liebert CWC Brochure	 221
Free Cooling	.....	Liebert EFC Brochure	 223

This page is intentionally left blank.

Rack and Row Cooling

This page is intentionally left blank.

Knürr® DCD

Passive rear-door heat-exchange for up to 35kW



Knürr® DCD

Passive cooling unit for maximum energy efficiency



Wate routing at Knürr ®DCD

Emerson Network Power DCD is an air-water heat exchanger integrated into the rear door of a server rack. The heat exchanger is able to absorb heat loads from server racks of up to 35 kW.

- Compact solution for newly constructed and existing data centers.
- Maximum possible energy efficiency due to lack of fans.
- Supports cold room concept.
- Enables permanent piping of the water circuit through water-bearing hinges.

Knürr® DCD

Benefits



Special water-bearing hinge

Availability

- No additional fans required for cooling so no risk of failure.
  - Greater system reliability
  - Fewer sources of failure
  - No additional fans so no waste heat load on the room
- Guaranteed 35kW cooling.
- Minimal air pressure drop.
- Condensation pipe and collector in the event that the temperature falls below the dew point; removed via 5/8" flexible hose on plug nipple.
- The risk of condensate deposit is reduced by vertical orientation of the heat-exchanger fins.

Efficiency

- No additional fans for cooling; option to use existing rack structures for minimized investment.
- Optimum space utilization due to ultra compact design and hence very low room costs.
- Minimum chilled water pressure drop. Just 54 kPa facilitates minimum energy consumption by the pumps.



Top water connection supports



Condensation discharge supports



Condensation pan

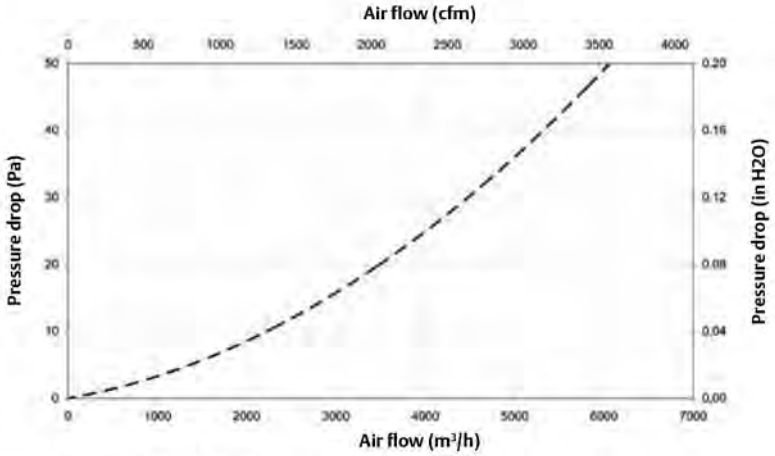

35 Pa is no problem for the typical fans in servers

Adaptability

- Standard heights of 2,000 and 2,200 mm (41/47U).
- Standard widths of 600, 700 and 800 mm.
- Top or bottom chilled water connection (field changeable).
- Combination of Knürr® DCD cooling door with server racks from other manufacturers is possible by incorporating special adaptor frames.



Knürr® DCD open without trim



Knürr® DCD with adapter frame to third-party rack

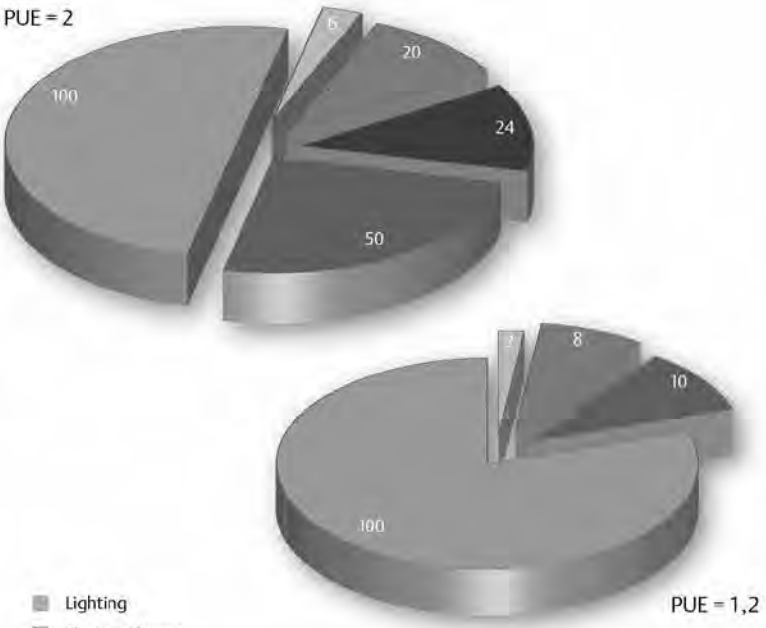

Knürr® DCD
Configurations



Knürr® DCD open without trim



Server rack cooling components with Knürr® DCD cooling door

Server rack air flow with Knürr® DCL (cross-section)

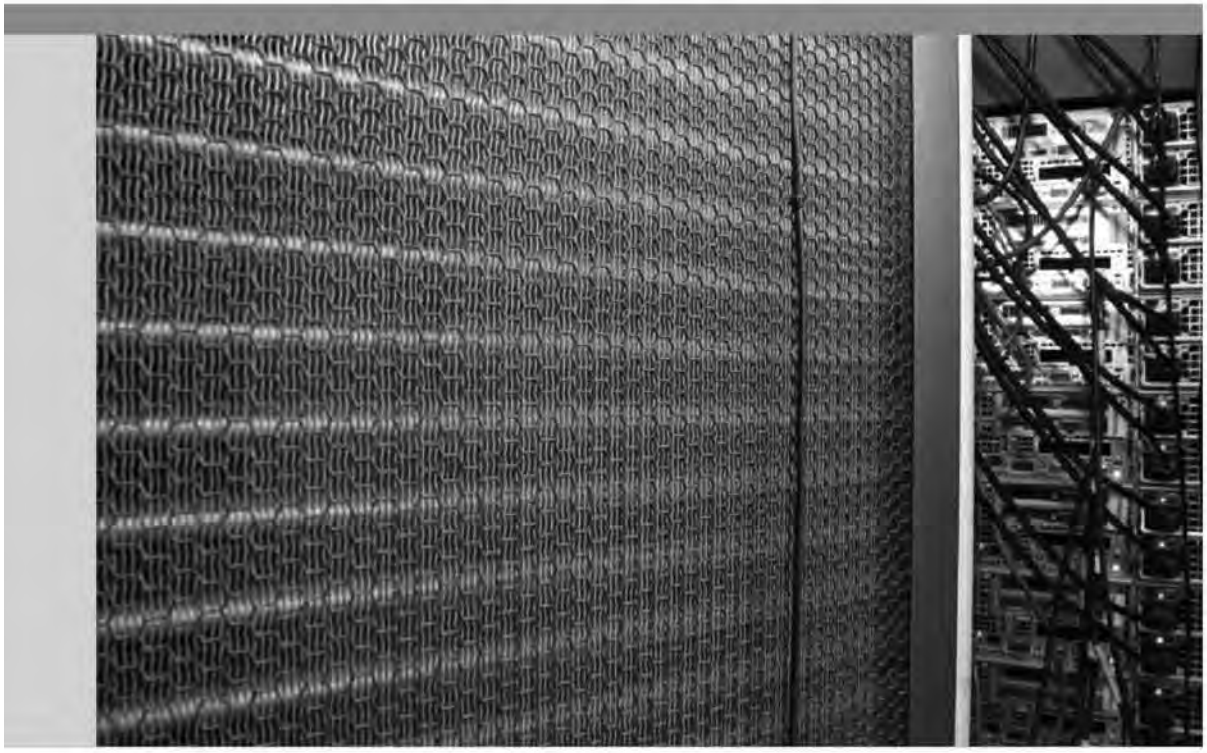

Knürr® DCD in a server cooling application

Knürr® DCD
Specifications, unit configuration number

Knürr® DCD/DCM basic specification

Cooling air side	
Housing material	Steel plate (powder coated)
Operating ambient temperature	10 °C ÷ 35°C (50 °F – 95 °F) (other temperatures on request)
Maximum absolute air humidity on site	8 g/kg
Air outlet temperature (in accordance with ASHARE)	18 °C ÷ 27 °C (64.4 °F – 80.6 °F)
Air temperature difference IN - OUT	15 K ÷ 20 K

Chilled water side	
Cooling performance	35 kW
Chilled water temperature inlet	12 °C ÷ 18 °C (53.6 °F – 64.4 °F) (other temperatures on request)
Chilled water temperature outlet	18 °C ÷ 24 °C (64.4 °F – 75.2 °F) (other temperatures on request)
Maximum operating pressure	10 bar (145 psi)
Pipe connection IN / OUT	1" F (on the frame) (DIN ISO 228 - 1)



Knürr® DCD: rear door closed

Knürr® DCD configuration number

Model number - part 1/2										Model details											Part 2/2			
1	2	3	4	5	6	7	8	9	10	11	12	13	14	15	16	17	18	19	20	21	22	23	24	25
D	C	D	3	5	A	G	3	3	0	0	0	0	0	0	1	0	0	0	0	5	X	0	0	1

1. - 3. Product identification
DCD = ENP DCD

4. - 5. Nominal cooling capacity
35 = 35 kW

6. Rack height
A = 2000 mm (78 – 6/8")
B = 2100 mm (82 – 5/8")
C = 2200 mm (86 – 5/8")
M = modification (custom – SFA only)

7. Rack width
6 = 600 mm (23 – 5/8")
7 = 700 mm (27 – 4/8")
8 = 800 mm (31 – 4/8")
M = modification (custom – SFA only)

8. Rack depth
E = 1000 mm (39 – 3/8")
F = 1100 mm (43 – 3/8")
G = 1200 mm (47 – 2/8")
3 = 3rd part rack adaptor
0 = no rack
M = modification (custom – SFA only)

9. Chilled water connection – hinge position
1 = top – left
2 = top – right
3 = bottom – left
4 = bottom – right

10. Options
0 = No options (Not available at the moment)

11. - 15. Not in use
0 = No options (Not available at the moment)

16. Color
1 = RAL 7035 (light gray)
G = RAL 7021 (dark gray)
2 = non-standard color (SFA)

17. - 20. Not in use
0 = No options (Not available at the moment)

21. Packaging
P = Land freight – short distance (pallet, shrink wrap cardboard protection)
S = Seaworthy (air freight) – long distance (wooden crate)

22. SFA – special features
X = SFAs included
A = no SFAs

23. - 25. Order identifier

This page is intentionally left blank.

Liebert® DM™

High Performance, Sensible Cooling for Small Computer Rooms and Network Closets

Liebert® DM™ delivers enterprise level thermal management to small computer rooms and network closets. It is designed for year-round temperature and humidity control for IT applications across the critical infrastructure. Equipped with an air-filtration feature, the Liebert® DM™ is ideal for areas where people and IT equipment occupy the same space. It provides enough flexibility in the critical infrastructure as it occupies minimum floor space which suits small and medium-sized computer rooms.

The Liebert® DM™ offers a selection of variants to fit your infrastructure's requirements and conditions. It also features communication capabilities to the critical infrastructure manager for easy monitoring of the temperature across the IT infrastructure.



Liebert® DM™ variants:

- Air Cooled up to 12.5kW capacity
- Chilled Water up to 25kW capacity

The Liebert® DM™ is ideally suited for:

- Small and medium sized computer rooms
- UPS and battery rooms
- Outdoor electronic and communication equipment rooms
- Transformer stations, substations
- Laboratories, test rooms and storage rooms



Features and Benefits



Energy saving

- High sensible heat ratio and high energy efficiency
- Equipped with Copeland Scroll Compressors
- Provides stable temperature and humidity condition
- Fans for outdoor units feature easy to access full range speed regulation
- Manageable and uniqe Eco-Mode option
- Energy saving component options

Space Saving

- Small footprint – 100% front door access

User-Friendly and Maintenance-Free

- Large screen display with multi-level password protection and expert fault-diagnosis functions
- Automatic startup on power and scheduled startup also available
- Standard RS485 Monitoring Interface
- Equipped with alarm for irregularities on blast reduction, fan failure and filter clogging
- Email and SMS notification (thru the Liebert® RDU™) for remote monitoring functions

Highly adaptive

- 24/7 operation capable
- Ultra wide input voltage range; multiple power protection functions
- Environment adaptability: adoption to outdoor temperature while meeting cooling requirements
- Adaptive to heat dissipation of the main equipment






Liebert® DM™ – *Air Cooled*

The Liebert® DM™ Air Cooled Thermal Management System is suitable for precise air conditioning of small and medium sized computer rooms and UPS & Battery rooms. Designed with the latest thermal management technology, the Liebert® DM™ Air Cooled and has passed industry standards for thermal management systems and features high energy efficiency, excellent reliability and long service life. The Air Cooled series is configured with constant temperature and humidity adjustment functionalities that can be easily managed and monitored at the on-screen display.



Options & Accesories (Air-cooled)

- Extended Piping Kit
- Water Leak Detection System
- RDU-SIC Card
- Remote T/H Sensor

*Power protection available, please contact Emerson Network Power sales for more details.

Liebert DM - Air cooled		
Model	DME07	DME12
Capacities, kW	7.5	12.5
Available configuration	Upflow Plenum Only	
Indoor Unit Power Supply	380V/3ph/50Hz or 230V/3ph/60Hz+N	
Condenser Type	Outdoor Condenser	
Refrigerant	R407C	
Humidifier[1]	Infrared	
Electric Heater Power, kW	3.2	
No. of fans	1	
Indoor Unit Dimension HxWxD), mm	1750 x 510 x 385	1850 x 600 x 500
Outdoor Unit Dimension (HxWxD), mm	830 x 790 x 355	1240 x 790 x 355
Indoor Net Weight, kg	95	145
Outdoor Net Weight, kg	40	60
Liquid line diameter, inch	1/2"	5/8"
Discharge line diameter, inch	3/4"	5/8"
FLA[2], A	8 - 20	11 - 22
Air breaker	32	

[1] This is an optional feature.

[2] FLA is Full Load Ampere; the maximum full load current value of the air conditioner is not the sum of rated maximum full load current of all components. It is the sum of rated maximum full load current value of the operating components, which may operate at the same time on the maximum work load condition.

Air Cooled Indoor Dimension

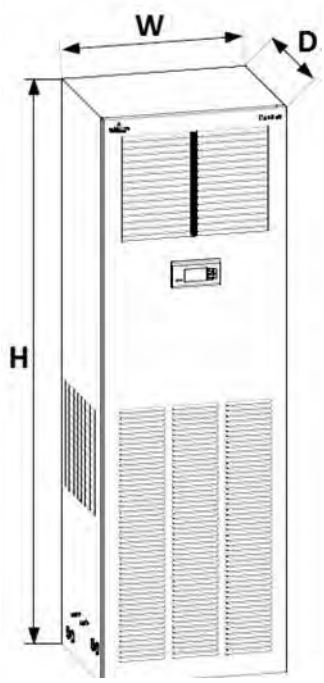

DMH07, DMH12

Air Cooled Outdoor Dimension

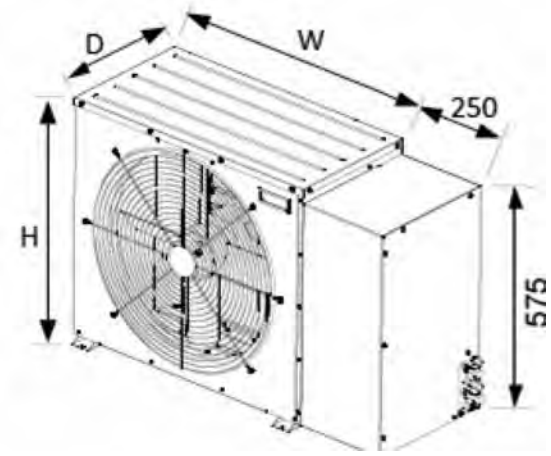

DMH07

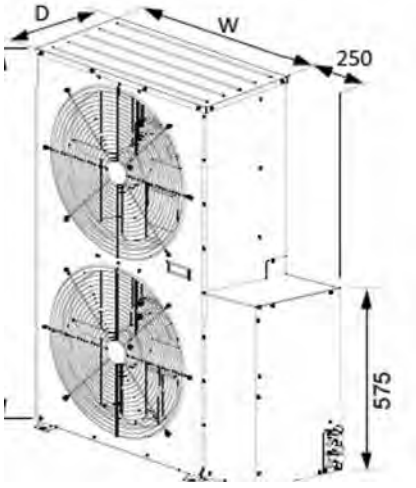

DMH012

Liebert® DM™ – Chilled Water Series



The Liebert® DM™ Chilled Water utilizes low-temperature chilled water available on site as the source for cold temperature and does not require an outdoor unit. The Chilled water series best applies to computer rooms located on commercial buildings with adequate chilled water source.

Options & Accesories Chilled Water System

- RDU-SIC Card
- Water Leak Detection System
- Remote T/H Sensor

*Power protection available, please contact Emerson Network Power sales for more details.

Chilled Water				
Model	DMH09	DMH12	DMH17	DMH25
Capacities, kW	8.2	11.6	16.3	23.2
Available configuration	Upflow Plenum and Downflow			
Power Supply	380V/3ph/50Hz or 380V/3ph/60Hz+N			
Refrigerant	Chilled Water			
Humidifier[1]	Electrode Humidifier			
Electric Heater Power, kW	4	4	6	6
No. of fans	1	1	2	2
Dimension (HxWxD), mm	1740 x 510 x 390	1900 x 610 x 580	1740 x 1105 x 405	1900 x 1205 x 575
Net Weight, kg	90	130	170	210
FLA[2], A	12	12	18	18
Air breaker	25	25	32	32
Water flow, l/s	0.4	0.6	0.8	1
Inlet/Outlet pipe diameter, inch	1"	1"	1.25"	1.25"
Total Pressure Drop, kPa	46	62	46	45

[1] This is an optional feature.

[2] FLA is Full Load Ampere; the maximum full load current value of the air conditioner is not the sum of rated maximum full load current of all components. It is the sum of rated maximum full load current value of the operating components, which may operate at the same time on the maximum work load condition.

Chilled Water Dimension

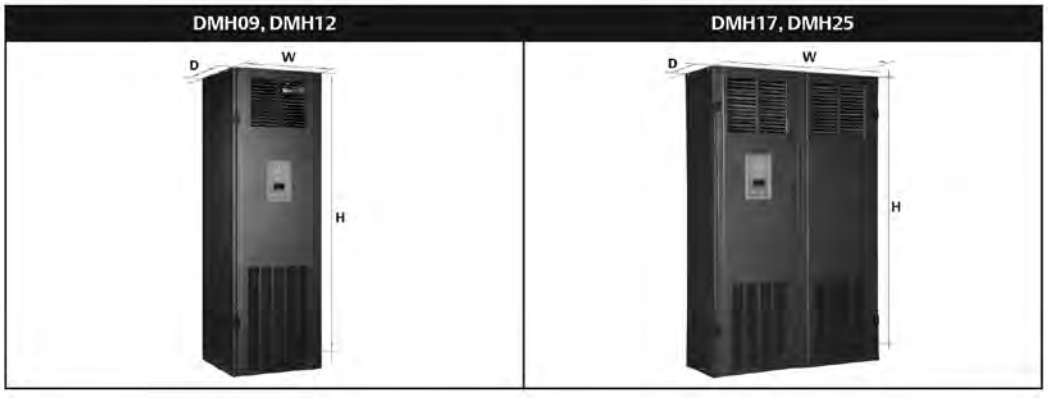

Communications

The Liebert® DM™ Series can be managed through your IP network.
As a standalone network management device it provides the following:

- Browser access through HTTP protocol
- Email notifications of critical events and potential operational impacts
- SMS alerts through your SMS gateway
- SNMP management through GET/SET requests and industry standard MIB

It is also compatible with Emerson management and monitoring systems for comprehensive integration with computer rooms and critical applications.

Liebert® RDU™ Monitoring Interface

The Liebert® RDU™ offers maximum visibility for insight in the infrastructure.





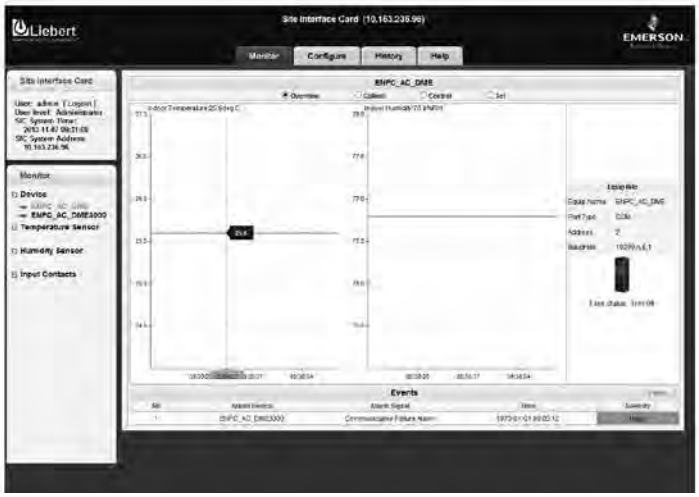

Technical Specification

Chilled Water				
Model	DME09	DME12	DME17	DME25
Capacities, kW	8.2	11.6	16.3	23.2
Available configuration	Upflow Plenum and Downflow			
Power Supply	380V/3ph/50Hz or 380V/3ph/60Hz+N			
Refrigerant	Chilled Water			
Humidifier[1]	Electrode Humidifier			
Electric Heater Power, kW	4	4	6	6
No. of fans	1	1	2	2
Dimension (HxWxD), mm	1740 x 510 x 390	1900 x 610 x 580	1740 x 1105 x 405	1900 x 1205 x 575
Net Weight, kg	90	130	170	210
FLA[2]**, A**	12	12	18	18
Air breaker	25	25	32	32
Water flow, l/s	0.4	0.6	0.8	1
Inlet/Outlet pipe diameter, inch	1"	1"	1.25"	1.25"
Total Pressure Drop, kPa	46	62	46	45

[1] This is an optional feature.

[2] FLA is Full Load Ampere; the maximum full load current value of the air conditioner is not the sum of rated maximum full load current of all components. It is the sum of rated maximum full load current valueof the operating components, which may operate at the same time on the maximum work load condition.

Chilled Water Dimension

DME09, DME12	DME17, DME25
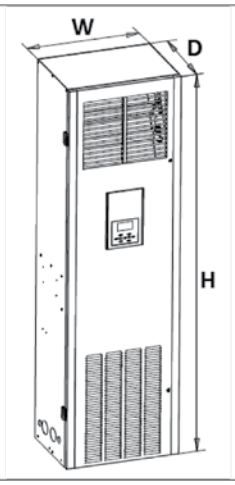	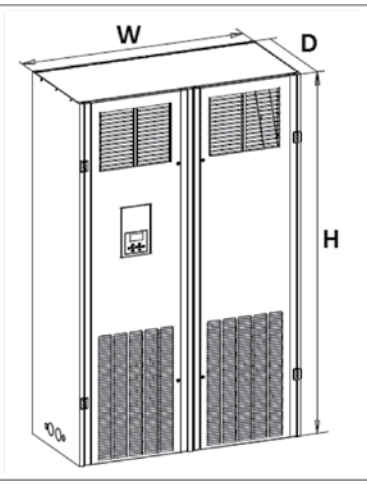

	Air cooled				
Model	DME05 (50Hz)	DME05 (60Hz)	DME07	DME12	DME16
Capacities, kW	5.5	6	7.5	12.5	16
Available configuration	Upflow Plenum only			Upflow Plenum and Downflow	
Indoor Unit Power Supply	220V/1ph/50Hz+N	230V/1ph/60Hz+N	380V/3ph/50Hz or 230V/3ph/60Hz+N	380V/3ph/50Hz or 230V/3ph/60Hz+N	380V/3ph/50Hz or 230V/3ph/60Hz+N
Outdoor Unit Power Supply	220V/1ph/50Hz+N	230V/1ph/60Hz+N	220V/1ph/50Hz+N or 230V/1ph/60Hz+N	380V/3ph/50Hz or 230V/1ph/60Hz+N	
Condenser Type	Outdoor Condenser				
Refrigerant	R22				
Humidifier[1]	N/A	N/A	Infrared humidifier with stainless steel pan		
Electric Heater Power, kW	4	3.2	3.2	3.2	6
No. of fans	1	1	1	1	1
Indoor Unit Dimension (HxWxD), mm	1800 x 500 x 385	1750 x 510 x 385	1750 x 510 x 385	1850 x 600 x 500	1970x853x874
Outdoor Unit Dimension (HxWxD), mm	752 x890 x 325	830 x 790 x 355	830 x 790 x 355	1240 x 790 x 355	992 x 1385 x 664
Indoor Net Weight, kg	73	90	95	145	300
Outdoor Net Weight, kg	40	40	40	60	105
Liquid line diameter, inch	3/8"	1/2"	1/2"	5/8"	1/2"
Discharge line diameter, inch	3/8"	3/4"	3/4"	3/4"	5/8"
FLA[2]**, A**	12.3	20	8 - 20	11 - 22	30
Air breaker	16	32	32	32	32

[1] This is an optional feature.

[2] FLA is Full Load Ampere; the maximum full load current value of the air conditioner is not the sum of rated maximum full load current of all components. It is the sum of rated maximum full load current valueof the operating components, which may operate at the same time on the maximum work load condition.

Air Cool Indoor Dimension

DME05 (50Hz)	DME05(60Hz), DME07, DME12	DME16
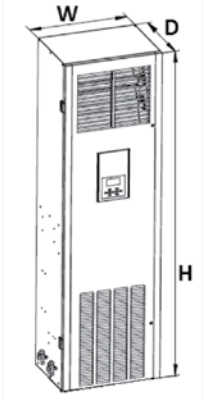	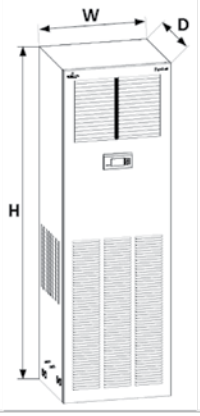	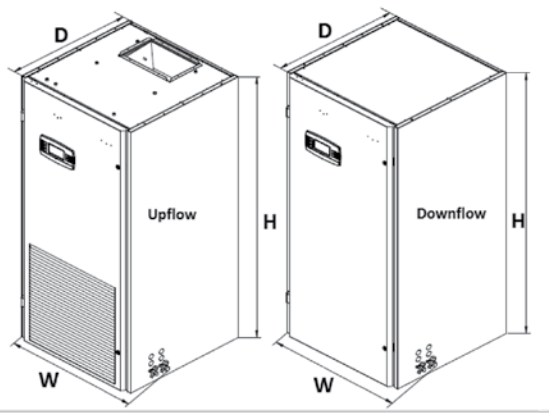

Air Cool Outdoor Dimension

DMC05 (50Hz)

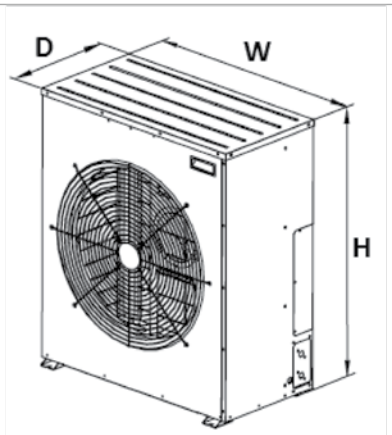

DMC05 (60Hz), DMC07

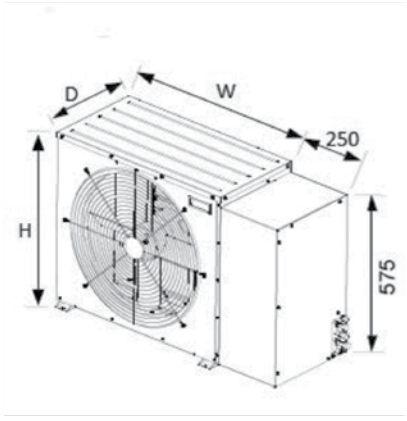

DMC12

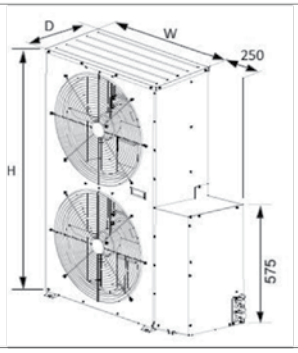

DMC16

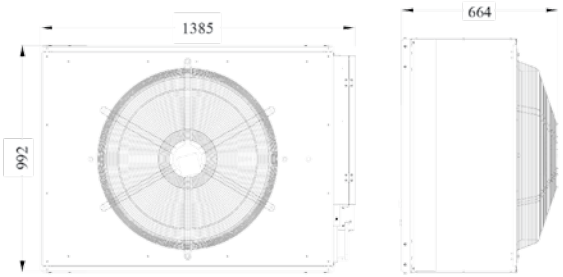

Key Features of Liebert DM Air-cooled Models

- V-shape evaporator for high heat exchange rate (DME16)
- Equipped with scroll compressor
- Full-range speed and low noise fans for outdoor units.
- Front door access
- Easy maintenance
- Precise temperature and humidity controls
- Humidifier options*
- Large on screen display (OSD) with multi-level password protection
- Automatic and scheduled startup functions up to 2 units
- RS485 monitoring interface standard
- Compatible with remote monitoring software
- Wide input voltage range (380V +/- 10%, 230V)
- Group control functions (DME16)
- Available in upflow (via plenum) and downflow, depending on floor plans. (DME16)

* DME05 – DME12: Electrode humidifier; DME16: Infrared humidifier

This page is intentionally left blank.

Liebert® CRV Row-Based Cooling™

Intelligent Precision Cooling For Data Center Equipment

■ 11kW ■ 20kW

The Liebert® CRV Combines the Best Footprint Capacity with the Highest Efficiency

- High Efficiency at Full and Partial Load
- Designed to Deliver the Highest Availability
- Industry's Most Advanced Control and Performance Optimization
- Comprehensive Row-Based Solution
- Backed by the Industry's Best Service and Support





11 - 20 kW Liebert® CRV

Highly Efficiency at Full and Partial Load

- Moving cooling closer to the source
- Field-adjustable air baffles - directing air where needed
- Full airflow and capacity modulation to match the server load and to save energy via:
  - DC Inverter Scroll Compressor
  - Electronic Expansion Valve
  - Variable Speed EC Fans





Liebert® CRV iCOM® Control

Designed to Deliver the Hightest Availability

- Real-time environmental control through rack sensors
- Automatic performance optimization with iCOM® Control and teamwork modes
- Up to date information on operational status via unit monitor

Industry's Most Advanced Control & Performance Optimization

- Temperature and humidity control
- Six different control modes for greater flexibility
- Controls up to 20 rack sensors to ensure the correct amount of cold air is provided

Comprehensive Row-Based Solution

- Humidifier and electric reheat for precise temperature and humidity control
- High filtration grade F5 filter with clogged filter switch
- Condensate pump
- Automatic transfer switch
- Advanced monitoring features through Intellislot Cards

Backed by the Industry's Best Service and Support

- LIFE™ Remote Diagnostic and Preventive Monitoring Services
- Fast and easy installation with casters
- Top and bottom piping and electrical connections as standard
- All components easily accessible from the front for simplified maintenance and service
- Service delivered through factory trained technicians
- 24/7 technical support



Technical Data	CR011RA	CR021RA
Net Sensible Cooling Capacity	11 kW	20 kW
Version	Air Cooled	Air Cooled
Input Voltage	230 V, 1 phase, 50 Hz	400 V, 3 phase, 50 Hz
Refrigerant	R410A	R410A
Compressor	DC Inverter, Scroll	DC Inverter, Scroll
Controls	iCOM® Control with large graphic display and 20 sensors for up to 10 racks	
Communications	HTTP, SNMP, RS-485 Modbus, Modbus IP/BACnet IP, Liebert Site Scan® Web 4.0	

**Return air Temperature 37°C, 24% Relative Humidity (RH), Condensing Temperature 45°C*

Dimensions		
Height	2000 mm	2000 mm
Width	300 mm	300 mm
Depth	1100 mm	1100 mm

Dimensions		
UP to 46°C Ambient Temperature	HCR43	HCR59

Liebert® CRV™
GUIDE SPECIFICATIONS

1 GENERAL

1.1 Summary

These specifications describe requirements for an environmental control system. The system shall be designed to maintain temperature and relative humidity conditions within the row(s) of racks.

1.2 Design Requirements

The environmental control system shall be a Liebert CRV factory assembled unit. It shall be floor mounted, optimized for maximum cooling capacity in a minimum footprint.
It shall be specifically designed for service from the front and rear of the unit. The system shall be designed for draw-through air arrangement to insure even air distribution to the entire face area of the coil. Thanks to adjustable air supply diffusers, the unit shall be capable to be mounted between the racks or at the end of row. The unit shall modulate cooling capacity and airflow based on requirements.

CR035 (DX version)
Each system shall be capable of handling up to 5500 CMH with a horizontal airflow pattern. It shall have a net sensible cooling capacity rated no less then 36 kW, based on the entering air condition of 37°C dry bulb, and 24% Relative Humidity. These units are to be supplied with 400 Volt, 3 phase, 50 Hz power supply. The humidifier shall have a capacity of 2 kg/h. Reheat shall have a capacity of 6kW.

CR020 (DX version)
Each system shall be capable of handling up to 4000 CMH with a horizontal airflow pattern. It shall have a net sensible cooling capacity rated no less then 23 kW, based on the entering air condition of 37°C dry bulb, and 24% Relative Humidity. These units are to be supplied with 400 Volt, 3 phase, 50 Hz power supply. The humidifier shall have a capacity of 2 kg/h. Reheat shall have a capacity of 6kW.

CR040 (CW version)
Each system shall be capable of handling up to 5650 CMH with a horizontal airflow pattern. It shall have a net sensible cooling capacity rated no less then 40 kW, based on the chilled water temperature 10/15°C entering air condition of 37°C dry bulb, and 24% Relative Humidity. These units are to be supplied with 400 Volt, 3 phase, 50 Hz power supply. The humidifier shall have a capacity of 2 kg/h. Reheat shall have a capacity of 6kW.

1.3 Submittals

Submittals shall be provided with the proposal and shall include: Dimensional/installation, refrigerant – hydraulic and electrical connections data, refrigerant and hydraulic circuit's drawings.

1.4 Warranty

The system shall be provided with a warranty against defects in material and workmanship.

1.5 Quality Assurance

The specified system shall be factory-tested before shipment and designed to meet CE requirements. The system shall be designed and manufactured according to world-class quality standards. The manufacturer shall be ISO 9001 certified.

1 PRODUCT

1.1 COOLING CIRCUITS

1.1.1 Direct expansion

One refrigeration circuit, incorporating a high efficiency, fully hermetic Copeland Digital ScrollTM compressor with crankcase heater, safety valve, filter drier, moisture indicating sight glass, liquid line solenoid valve and an externally equalised expansion valve.
The compressor solenoid valve shall unload the compressor & allow the variable capacity operation, i.e. the Digital Scroll compressor shall modulate its capacity from 20% to 100% without frequency variation. The compressor is suction cooled motor, vibration isolator, internal thermal load overloads, manual reset high pressure switch, rota lock service valves, low pressure & high pressure transducers.

Each compressor is equipped with pre-set high and low pressure switches for protection against high condensing and low evaporating temperatures. The low pressure switch features an automatic reset (with an adjustable delay for winter start-up).
The unit shall be provided with additional protection against high ambient temperature. When the temperature goes over the design conditions, the unit remains in operation with partial load (20% decrease against required). If such protection is not sufficient High Pressure switch shall generate an high pressure alarm and the unit shuts down - manual reset shall be required.

The inclined evaporator coil is manufactured from copper tubes, mechanically bonded to hydrophilic painted aluminium fins, with a stainless steel condensate drain pan. The large face area/low velocity coil allows precise control of temperature and humidity* during cooling and dehumidification*, and is designed to optimise fluid velocity and minimise pressure drop.

The moisture indicating sight glass, liquid line solenoid valve and expansion valve for each circuit are mounted in a service compartment, isolated from the air stream, to allow checking and adjustment while the unit is in operation.

1.1.2 Chilled Water

The water circuit shall include a cooling coil and 3-way or 2-way modulating valve. The Liebert iCOM positions the valve in response to room conditions.

COOLING COIL The chilled water coil has 0.674 m2 - 7.26 ft2 face area, 6 rows deep. It is constructed of copper tubes and aluminium fins. A stainless steel condensate drain pan is provided.

3-WAY MODULATING VALVE This unit operates with a 3-way modulating valve to control the flow passing through the cooling coil. The opening or closing signals, generated by the electronic controller, manage the valve actuator movement in response to room conditions. The servomotor is 0-10V. The Maximum
close-off pressure across the valve is 175 kPa - 25.4 PSI.

2-WAY MODULATING VALVE (Optional) This unit operates with a 2-way modulating valve to control the flow passing through the cooling coil. The opening or closing signals, generated by the electronic controller, manage the valve actuator movement in response to room conditions. The servomotor is 0-10V. The Maximum close-off pressure across the valve is 175 kPa - 25.4 PSI.

1.2 Fan section

Units is offered with two plug EC Direct Drive Fan, High efficiency, external rotor electronically commutated (EC) motor with integrated electronics, True soft start characteristics (inrush current lower than operating current), Backward curve, corrosion resistant aluminium fan wheel, Maintenance free design and construction. The fan section shall be designed for higher air flow. The fan shall be protected over temperature of motor, electronics, locked rotor protection, short circuit of motor output. Fans are IP54, Protection class F.

1.3 Cabinet and Frame

The unit shall be powder painted steel panels with ½" (or 10mm) insulation. A hinged control access panel opens to a second front panel which is a protection enclosure for high voltage components. The frame is painted with a powder coat finish to protect against corrosion. The unit is totally front and rear accessible including any component removal. Unit shall be provided with casters and levelling feet for an easy unit placement into the row of racks.

1.4 Air Filtration

The filter cells are made of two deep pleated 4" filters rated MERV8 following ASHRAE 52.2 (45% by ASHRAE 52.1) or G4 following EN779, located within the cabinet, and accessible from the rear of the unit. Frame of the filter shall be made of galvanized steel.
Optional filters are available: MERV11 following ASHRAE 52.2-1999 (45% by ASHRAE 52.1-1992) or F5 following EN779.
Clogged filter alarm is available for standard and for optional filter. It sends a visual alarm to display.

1.5 Refrigerant

All units equipped with direct expansion circuit are suitable for R410A refrigerant.

1.6 Microprocessor Controller

Liebert CRV models are controlled by iCOM Medium Board. The iCOM board is microprocessor based. It can be programmed to control the function of every device within the unit via I/O.

The controller allows setting and monitoring of the room parameters. Unit utilises multiple temperature sensors placed at the rack inlet, to ensure management and control of temperature by rack. Each unit should be connected up to 10 Sensors.
The controller allows setting and monitoring of the following space parameters:

- Air inlet Temperature
- Air supply Temperature (remote sensors at rack inlet)
- Return Temperature set-point
- Supply Temperature set-point
- Return Temperature band
- Supply Temperature band
- Humidity (inlet)
- Humidity set-point
- Humidity band
- Rack Min, Max and Average temperature
- CW temperature

The example of available warnings / alarms:

- High supply temperature
- Low supply temperature
- High return humidity
- Low return humidity
- Loss of airflow
- Compressor Low Pressure
- Compressor High Pressure
- High CW Temperature
- Loss of CW flow
- Electrical heater high temperature (When applicable)
- Clogged filter
- Customer input (No 4 inputs)
- LP transducer fail
- Call service (customer input)
- High temperature (customer input)
- Unit hours exceeded

- Compressor hours exceed
- Humidifier hours exceed
- Supply sensor failure
- Network failure
- Humidifier problem
- Digital scroll high temperature
- Smoke detected
- Fire alarm
- Rack sensor failure
- etc

Following features are incorporated in the controller:
- Status Report of the latest 400 event-messages of the unit.
- Input for remote on-off and volt-free contacts for simple remote monitoring of low and high priority alarms: high/low temperature, high/low refrigerant pressure, fan/control failure, compressor/ control failure and others are available
- LAN management: functions provided as standard include stand-by (in case of failure of the unit in operation, the second one starts automatically), and automatic rotation. At least one unit in the LNA has to be equipped with ColdFire large display
- Automatic restart is provided after a power failure.

Two displays are available:
ColdFire Large Display
is the large graphic screen display, including 320x240 pixel screen, symbolic representation of unit functions, diagnostics feature, help screens in 10 languages, spare parts list. It provides with tracked records of the temperature and humidity with possibility to show also the graph on the screen.
A buzzer provides audible indication in case of the 'Warning' or 'Alarm' event.

ColdFire Small Display
is the graphic screen display, including 128 x 64 pixel screen, symbolic representation of unit functions, diagnostics feature, help screens in 10 languages, spare parts list. It provides with tracked records of the temperature and humidity with possibility to show also the graph on the screen.
A buzzer provides audible indication in case of the 'Warning' or 'Alarm' event.

1.1 Monitoring

The unit shall also include IntelliSlot housing for up to two IS (Intelligent slot) Web cards or IS 485 cards, or one IS web and one IS 485 card.

Liebert IntelliSlot Web Card delivers SNMP and HTTP/Web-management capability for enhanced communications and control of HPM systems. The cards make use of an Ethernet network (10/100Mbit) to monitor and control a wide range of operating parameters, alarms and notifications thanks to a standard web browser (Internet Explorer). The card utilizes standard Ethernet cables (different cable lengths are available for your convenience on the Connectivity price list).
SNMP protocol is nowadays the standard in the IT world for Network Management, so customers can use their own Network Management Software or our Liebert Nform monitoring software

Liebert IntelliSlot 485 delivers Modbus for HPM units. Modbus is widely used for BMS (Building Management System) integration. The Liebert IntelliSlot 485 card acts as a slave device on a network.
The card manages a wide range of operating parameters, alarms and notifications, transmitting data over the network.

The unit shall also include input for remote on-off and volt-free contacts for simple remote monitoring of low and high priority alarms: high/low temperature, high/low refrigerant pressure, fan/control failure, compressor/control failure and others are available.

1.2 Condenser (DX Air cooled version only)

The condenser should be with fan speed controller designed & set for usages of R410A refrigerant. Condenser should be worked -20 deg C to 46 deg C ambient temperature. The condenser frame shall be made up of a sturdy aluminium structure. The main disconnector shall be IP65. The entire unit shall be IP54 type of protection. The motorized fan shall be IP54, protection class F. Fan blades implement the HiBlade TM technologies.

1.3 Optional Features

1.3.1 ELECTRIC RE-HEATING

The heating resistors are of a rigid design for extended operational life and are normally utilised to maintain room dry-bulb conditions during a system call for dehumidification. The electric reheat coils are low watt density, 304 stainless steel fin tubular construction, protected by thermal safety switches. Re-heating control is of the ON-OFF type one step. The heating system also incorporates Miniature Circuit Breaker which protect the heaters from short circuits, should the harness be damaged accidentally. Electrical re-heat can be disabled by remote contact (Optional - humidifier and reheat lockout).
The reheat elements are removable from the front of the cabinet.

1.3.2 HUMIDIFIER

The unit is fitted with an canister type steam humidifier suitable for use with water of varying degrees of hardness, provided that the water is not treated or demineralised (Conductivity range 125-500μS/cm). The humidifier is complete with a water inlet valve, water outlet valve and a maximum water level sensor, disposable cylinder, steam distributor and electronic controls. Humidifier control is of the ON-OFF type, can be also disabled by remote contact (Optional - humidifier and reheat lockout). Humidifier is removable from the rear of the cabinet.

1.3.3 CONDENSATE PUMP

It shall have a capacity of 22.7 l/min (6 GPM) at 9 m (30ft) head. Pump is complete with integral dual float switch, pump - motor assembly and reservoir. The secondary float shall send a signal to the local alarm and shut down the unit upon high water condition

1.3.4 HIGH TEMPERATURE SENSOR

High temperature sensor (FIRESTAT) is mounted in the unit with the sensing element in the return air flow. Upon activation the high temperature stat will immediately shut down the entire unit.

1.3.5 SMOKE DETECTOR

The smoke detector senses the room air, shuts down the unit upon detection, and sends visual and audible alarm. Dry contacts are available for a remote customer alarm. This smoke detector is not intended to function as or replace any room smoke detection system that may be required by local or national codes.

1.3.6 CRANKCASE HEATER

The compressor shall include crankcase heaters, powered from the indoor unit electric panel.

1 Product Description

1.1 Product Description

The Liebert® CRV is an air cooled full–featured direct expansion Thermal Management unit to be installed within a row of high density computing racks in a "hot–aisle–cold–aisle" configuration. Air heated by the room equipment enters the unit from the hot aisle; it is filtered, cooled, conditioned, and subsequently returned to the cold aisle. Supply air flow direction can be easily modified (via the optional air discharge baffles) to the left side or to the right side or to both directions so it may be placed between the racks or at the end of the row. It maximizes cooling effectiveness, reduces the occurrence of hot spots and improves the overall system efficiency.

The Liebert® CRV provides all the necessary functions provided by a standard precision air conditioner including cooling, heating, humidification, dehumidification, air filtration, condensate management, temperature control, alarm functions and data communications.

It is targeted for small and medium data centers and it is optimized to ensure maximum cooling capacity in a minimal footprint. The extremely energy efficient components of the system are managed by the Liebert iCOM® Control system. The control monitors the environment in real–time by locating sensors on the inlet of the racks that the unit is cooling. This information allows the unit to optimize its operations in terms of performance and energy efficiency.

Service and maintenance are performed through the front and rear of the unit, including all component replacement. All piping and electrical connections are made through the top or bottom of the unit.

2 Application of Liebert® CRV

2.1 First check

Before proceeding with Liebert® CRV application please make sure the unit selected is suitable for your site. Liebert® CRV is targeted for small and medium data centers and it is optimized for maximum cooling capacity in a minimal footprint. It is designed for high air inlet temperature (up to 40° C), therefore it is advised to accomplish Hot–Cold aisle configuration.

Liebert® CRV is able to modulate the cooling capacity in order to quick adjust to any changing heat load.

Liebert® CRV is designed to provide proper control of the room temperature, humidity and air filtration.

The specific design of Liebert® CRV is optimized in order to be extremely efficient without providing unnecessary latent cooling (dehumidification) not specifically required for cooling of IT electronic equipments, which enhance the overall cooling system efficiency.

In particular cases when a high dehumidification is required, for example in combination with High Density cooling Liebert® XD system, it is suggested to use the Liebert® CRV also in combination with Emerson Network Power Floor mount units (e.g. Liebert® PDX, Liebert® PCW or Liebert® HPM).

2.1.1 Hot–Cold aisle configuration

A best practice is to use rows of equipment racks in an alternating arrangement of cold aisles and hot aisles.

In the cold aisle, the equipment racks are arranged face to face so the cold air discharged from the Liebert® CRV unit(s) is drawn into the front of the servers and exhausted out through the rear into the hot aisles. Hot aisles are literally hot because the objective of the alternating cold and hot aisle design is to separate the source of cooling air from hot air discharge which returns to the Liebert® CRV unit(s). Therefore, hot and cold aisle should be separated otherwise there would be a mix of hot and cold air and thereby lower the temperature of the air returning to the CRV units, which reduces their usable capacity.

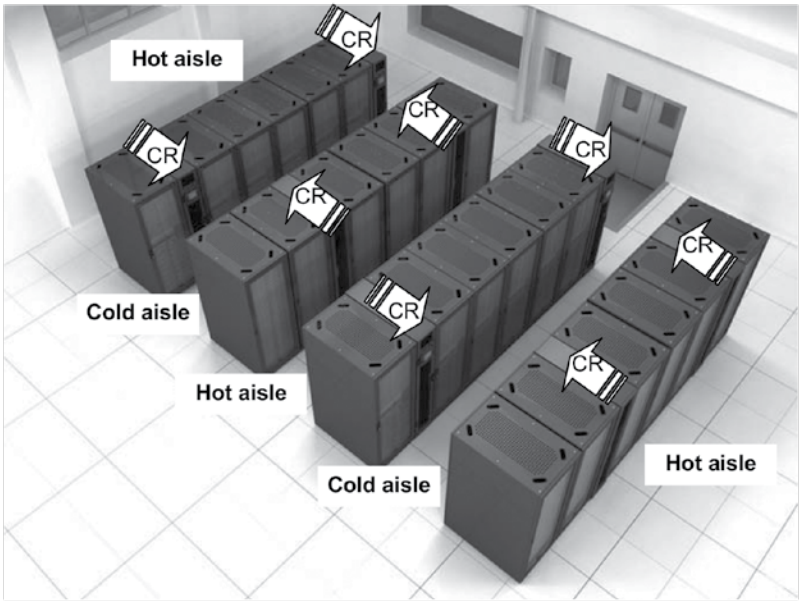

Fig. 2a Example of high density installation with cold aisle and hot aisle alternation

2.1.2 Combination with other Cooling systems

Liebert® CRV may be combined with other cooling systems such as underflow CRAC units (e.g. retrofit of current installation) until there is proper setting of both systems without influencing each other. Otherwise there is a risk of cycling or increased power consumption of both systems, in worst case causing malfunction of the units. For details contact Emerson Network Power sales representative.

2.2 Selection of Liebert® CRV unit(s)

2.2.1 Number and size

When designing a cooling solution using the Liebert® CRV unit(s), the initial steps are similar to those required to cool a conventional critical space. The total heat load must be calculated, including sensible and latent cooling requirements. These should be increased by the reserve capacity needed for pull– down situations (e.g. after power failure) where the room temperature must be reduced and to cover unexpected increases in the heat load. Consider also redundant capacity, which is usually not in use in the normal operation, but takes duty if any of the running unit(s) fail. So the different steps are:

- Check the heat load of IT equipment and apply safety margin if required.
- Define size and number of Liebert® CRV units in order to provide enough net sensible cooling capacity to cover the heat load. Typical air inlet temperatures to be considered for normal operation of the unit(s) are between 33° C and 37° C. Please refer also to point 2.2.3 Air Flow Requirements
- When N+X (typical N+1) redundancy is required, use more units so if any of the unit(s) fail, the remaining unit(s) will cover the heat load. Always consider the layout of the room when defining number of units, see chapter 2.4 Positioning–unit placement.

2.2.2 Air Flow Requirements

Liebert® CRV is optimized to provide precision cooling for IT equipment with temperature raise (delta T) of cooling air passing through the equipment around 15 to 20 degrees Celsius or higher. Such temperature raise is typical for Blade servers and standard pizza servers. For applications with very low delta T, around 10 degrees Celsius, typical for old fashion servers, it is necessary to de–rate cooling capacity of the Liebert® CRV due to higher air flow equipment.

In case of application with Cold Aisle Containment (Smart Aisle) it is necessary to carefully investigate the air flow through IT equipment and to define number of Liebert® CRV units in order to provide at least 5% more airflow, excluding redundant unit(s). Otherwise there may occur a situation with negative pressure in the Smart Aisle containment and hot air possibly leaking inside the containment.

2.3 Operating limits

The units are designed to operate within working ranges.
These limits are referred to new machines or to those that have been correctly installed and serviced. The warranty clauses are no longer valid for any possible damage or malfunction that may occur during or due to operation outside the application values.

2.3.1 For all units (*)

		From:	To
Room air conditions	Temperature	21°C	40°C
	Humidity ratio	5.5 g/kg	11 g/kg
	Relative humidity	20 %	60 %
Storage conditions	Temperature	– 20°C	50°C
Power supply tolerances		V ± 10 %	
		Hz ± 2	

Application of Liebert® CRV

Fig. 2d Simulated aisle containment using room barriers – single row

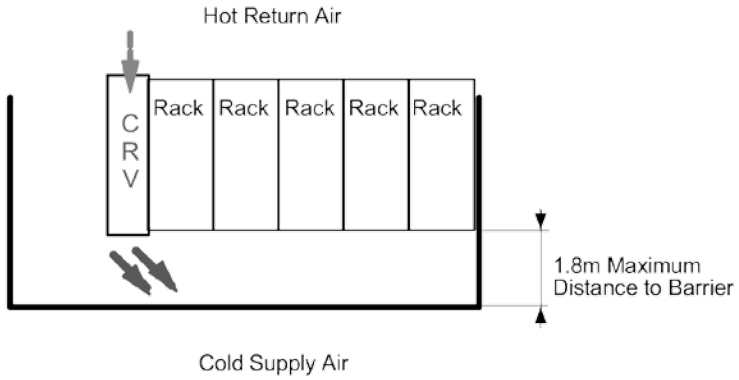

Fig. 2e Simulated aisle containment using room barriers – multiple rows

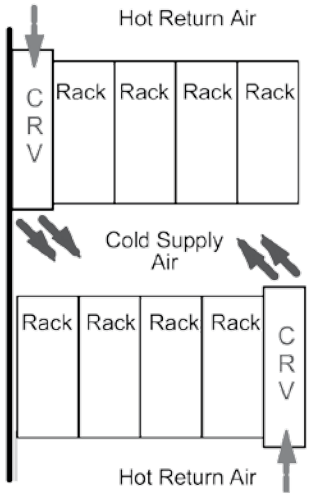

2.4.3 Liebert® CRV Applied in SmartAisle™ Cold Aisle Containment

Using the Liebert® CRV with the SmartAisleTM is always recommended to ensure top efficiency, but not required. It is an excellent solution when attempting to cool widely varying heat loads, (ie. exceeding 10kW per rack), and when seeking the highest efficiency systems. Fully containing the cold aisle will allow to automatically balance the Liebert® CRV cooling capacity and airflow to the server rack's requirements in real—time.
The 2T rack temperature sensors installed in the sensor boxes of the containment can be used to control the fan speed of the unit in the SmartAisleTM mode.
Version "Without Air Discharge Baffles" can be used in SmartAisleTM applications.

Fig. 2f Liebert® CRV Placement in SmartAisle™ Cold Aisle Containment Application

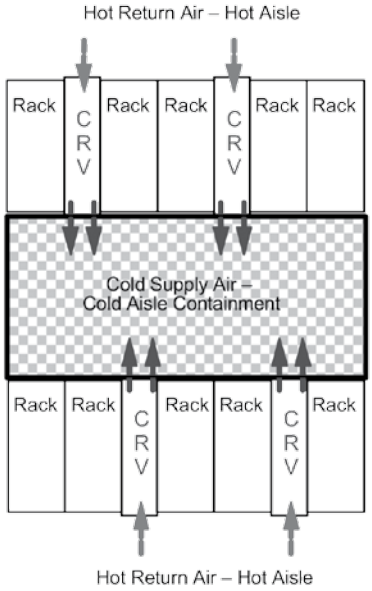

2.5 Temperature sensors

The sensor may be placed where desired or left coiled inside the unit. It is recommended that the sensor be routed to the front of the heat load for the most accurate temperature reading. In InRow configuration, the temperature sensor monitors the temperature of the air entering the rack equipment. The reading is used to control the operation of the unit, so the sensor must be placed as directed below or the equipment will not operate properly.

Insert the rack temperature sensor connector in the temperature sensor port at the iCOM interface. Secure the temperature sensor in front of the warmest heat source in the enclosure. Do not secure in front of a blanking panel. The sensors must be installed where lack of sufficient cooling air is most likely. The optimum position of the rack temperature sensors will vary from installation to installation. Servers most likely to have insufficient or inadequately cooled cooling air due to the recirculation of hot air from the hot aisle include:

- Servers positioned at the top of a rack.
- Servers positioned at any height in the last rack at an open end of a row.
- Servers positioned behind flow—impairing obstacles such as building elements.
- Servers positioned in a bank of high—density racks.
- Servers positioned next to racks with air removal units.
- Servers positioned very far from the equipment.
- Servers positioned very close to the equipment.

3 Liebert CRV

3.1 Standard features

Air cooled models

DX COOLING COIL The evaporator coil has 0.59m^2 face area, 2 or 3 rows deep. It is constructed of copper tubes and hydrophilic coated aluminium fins. The hydrophilic coating provides superior water carryover resistance. A stainless steel condensate drain pans are provided.

REFRIGERATION SYSTEM Single refrigeration circuit includes a liquid line filter drier, a refrigerant sight glass with moisture indicator, an electronic expansion valve, and a liquid line solenoid valve.

COMPRESSOR The compressor is an R410A DC inverter scroll type with variable capacity operation from 30–100%. The compressor has a suction gas cooled motor, vibration isolators, internal thermal overloads, manual reset high pressure switch, low pressure and high pressure transducer, crankcase heater, internal centrifugal oil pump, and an operating speed of 3000RPM @ 50Hz.

ELECTRONIC EXPANSION VALVE DEVICE (EXV) The valve is designed for modulating control of refrigerant circuits with high speed and high precision. It is suitable for use as expansion device in refrigerant circuits with DC Inverter Scroll compressor, with organic safety refrigerants (i.e. R410A). For variable capacity systems, an EXV provides superior performance as compared to a traditional thermostatic expansion valve (TXV), due to:

- Precise flow control
- Positioning time

Electronic expansion valve ensure a better control on superheating at the outlet of the evaporator, ensuring at same that compressor will never be filled by liquid. Moreover the EXV valve let the condensing temperature goes down to 33°C.

FAN The unit is equipped with five (CR021) or three (CR011) direct driven radial fans with backward curved blades and Electronically Commutated DC motors; commonly referred to as EC plug fans. The fan speed is variable and automatically regulated by the iCOM control through all modes of operation. Each fan has a dedicated motor which provides a level of redundancy. The fans pull air through the coil and are located on the front side of the unit.

iCOM CONTROL SYSTEM The Liebert CRV is controlled by the iCOM Control System. The standard user interface is the Large Graphical Display (320x240 pixels, backlit) which presents system information and allows all parameters to be viewed and adjusted. It features push–button navigation, operational status LEDs, and a 3–level password protection system. iCOM without display is available as option. Unit without display can be controlled through a display of another unit in the same group or through a service display. Unit–to–Unit communication with other Liebert CRVs and two IntelliSlot communication card housings are included as standard.

2T RACK TEMPERATURE SENSORS Consist of a vented case with two temperature probes. Up to 10 2T housings (20 temperature probes) can be connected to a Liebert CRV. One 2T housing and both sensor probes are to be attached to a rack the cooling unit is conditioning. The sensors provide real–time, direct feedback to the cooling unit to optimize the amount of cooling and airflow required; increasing energy efficiency and ensuring proper rack inlet air temperatures. The sensor data can also be reported to remote BMS and monitoring systems. The sensor network consists of one CAN wire leaving the cooling unit and connecting to a 2T sensor. Each remaining 2T sensor is connected to the previous sensor; often referred to as a daisy–chain configuration.

REMOTE SHUTDOWN TERMINAL Provides the customer with a location to remotely shut down the unit.

COMMON ALARM CONTACT Provides the customer with a set of normally open (n/o) contacts for remote indication of unit alarms.

CABINET The exterior steel panels are custom powder coated to protect against corrosion. The double wall constructed side panels separate the ½", 2.0 lb/ft^3 insulation from the airstream. The unit is mounted on casters for quick installation and provided with levelling feet. The perforated inlet and outlet panels have 81% open area.

SERVICE ACCESS All service and maintenance is performed through the front and rear of the unit; including any component removal. No side access is required. All electrical and piping connections are made through the top and/or bottom of the unit.

FILTER The unit is equipped with two air filters rated G2 following EN779, located within the cabinet, and accessible from the rear of the unit. Air filter F5 are available as option. A filter clog alarm is included as an option.

LOCKING DISCONNECT SWITCH A molded case circuit interrupter disrupts the flow of power to the unit. The electric panel high voltage compartment can only be accessed with the switch in the 'off' position. It is located behind the back door for a quick access.

3.2 Optional features

Air cooled models

SUPPLY AIR BAFFLE A field adjustable, modular supply air baffle is located in the discharge air stream. It can be quickly and easily reconfigured to redirect airflow. The angles of the vanes have been optimized to effectively distribute air to heat generating equipment in a wide variety of applications.

CONDENSATE PUMP It has a capacity of 50 l/h at 3.7 m head. A float signal is available for a remote alarm.

HUMIDIFIER A steam generating canister humidifier is factory−installed in the cooling unit and is operated by the iCOM control system. It is complete with disposable cylinder, all supply and drain valves, steam distributor and electronic controls. The need to change the canister is inticated on the iCOM display, if available. The humidifier is designed to operate with water conductivity from 125−500 (50Hz) microS/cm. System automatically fills and drains as well as maintains the required water level based on conductivity. An air−gap within the humidifier assembly shall prevent backflow of the humidifier supply water. The humidifier is removable from the rear of the cabinet.

ELECTRIC REHEAT The electric reheat coils are low watt density, 304 stainless steel fin−tubular construction, protected by thermal safety switches and controlled in one stage.

INTELLISLOT UNITY CARD (IS−UNITY−DP) Provides monitoring via SNMP, Modbus (RS485/IP), BACnet (RS485/IP) and HTTP (Web) protocols

INTELLISLOT SITESCAN CARD (IS−485EXI) Provides monitoring via Liebert SiteScan Web 4.0 Protocol

FILTER The optional F5 class (following EN779) filters are two deep pleated 60 mm, located within the cabinet and accessible from the rear of the unit. A filter clog alarm is included as an option.

ONE (1) EXTRA COMMON ALARM CONTACT Provides the customer with a total of two sets of normally open (n/o) contacts for remote indication of unit alarms.

LIQUI−TECT SENSOR Is a solid state water sensor that has no moving parts and is hermetically sealed to keep out dust and dirt. When the sensor detects the presence of moisture the alarm system is activated.

DUAL POWER SUPPLY with an internal automatic transfer switch is available as an option. With this option the unit can be connected to 2 separate power supplies where each power supply is able to completely feed the unit. In case of failure of the main supply the unit automatically switches to the second power supply. This allows to have a complete power supply redundancy.

4 Operation

Unit operation is completely automatic. The below sequence explains how the unit operates:

- The air, sucked in by the continuously operating fans, enters the unit.
- The air is immediately filtered.
- The TEMPERATURE sensor or HUMITEMP (temperature + rel. humidity) sensor (depends on unit configuration), verifies the state of the inlet air, and relays this information to the control system.
- The air is treated and then blown out of the unit.
- The control system compares the relayed information to the set point and proportional band values programmed into its memory: it then commands the air conditioner to treat the air as follows (see also Control manual).

4.1 Cooling

- Direct expansion mode (DX)
  The compressor is started and the cold refrigerant flows through the evaporator, thus cooling the air passing over it. For compressor operation see Control manual.

4.2 Heating

- Electrical heating (optional): the heating elements heat the air passing over them. There is one heating steps activate in case of dehumidification if supply air temperature is too low (for heating logic see Control manual)

4.3 Dehumidification

- DX mode
  The compressors starts and either the air flow or the evaporator surface is reduced (increasing modulation capacity of compressor), thereby causing dehumidification (refer also to Control manual).
- N.B.: If, during dehumidification, the ambient temperature drops below a specified level, dehumidification will be stopped if necessary (see LOW LIMIT intervention in Control manual).

In dehumidification mode, the air after passing over the coil it's reheated (if needed) by electrical heater to re–stabilize the initial temperature

4.4 Humidification – optional

- The humidifier creates steam, which is distributed into the air via the steam distribution pipe

5 Microprocessor Controls

5.1 iCOM Control

Fig. 5.a

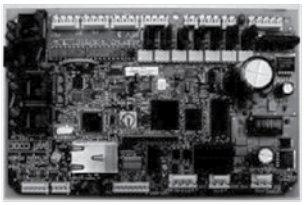

Liebert CRV models are controlled by iCOM Medium Board (Fig. 5.a).
The control board is housed in the electrical panel and it is connected to the remote display, to be installed in the container/room (connection cable is included).



- The standard user interface is a graphical display (128 x 64 pixels, backlit) showing parameter values and the relevant symbols/codes in a tree menu. It features navigation push–buttons and status leds.
  Self–explanatory icons are used for the menu–layout of the display.
- Status Report of the latest 400 event–messages of the unit.
- Graphic Data Records for temperature and humidity
- Both high and low priority alarms activate a visual indicator and buzzer.
- Input for remote on–off and volt–free contacts for simple remote monitoring of low and high priority alarms: high/low temperature, high/low refrigerant pressure, fan/control failure, compressor/control failure and others are available.
- LAN management: functions provided as standard include stand–by (in case of failure of the unit in operation, the second one starts automatically), and automatic rotation.
- All settings are protected through a 3–Level password system (*).
- Automatic restart is provided after a power failure.

Tab. 5a – Technical Data

Technical Data	iCOM Medium
E2prom	4Mbit + 512kbit
Flash memory	32Mbit
RAM memory space	128Mbit
Microcontroller	Coldfire 32Mbit
Analogue Input	3 x 0–10V,0–5V,4..20mA (selectable) + 2 PTC/NTC + 3 NTC
Digital Input	9 x opto–coupled
Analogue Output	2 x 0–10V
Digital Output	7 triacs output and 2 relay output
Time and date function buffered by LI–battery	
Hirobus Lan connectors	2 RJ45 sockets (for unit in LAN, remote display)
Ethernet network connectors	1 RJ45 socket
CAN bus connectors	2 RJ12 sockets
Hironet connectors	1 RJ9 socket for RS485 (direct connection to proprietary supervision)

Microprocessor Controls

5.2 CDL Graphic Display (option)



- Large graphic display (320 x 240 pixels)
- Self–explanatory icons are used for the menu–layout of the CDL Display.
- Status Report of the latest 400 event–messages of the unit/system.
- Graphic Data Records for temperature and humidity, selectable timeframes from 8 minutes to 2 weeks.
- Semi or Full Manual Mode software management including all safety devices.
- 4–Level Password system to protect all settings.
- Ergonomic design for use also as portable device (start–up and "flying connections" by service personnel).

Technical Data CDL Graphic Display

- Microcontroller: . . . . . Coldfire 32Mbit
- Ethernet network connectors . . . . . 2 RJ45 sockets (for unit in LAN, remote display)
- CAN bus connectors . . . . . 2 RJ12 sockets
- Power supply: . . . . . via CAN bus or external 12Vdc supply

5.3 iCOM without Display (option)

- 3 color LED light status.
- switch for local ON/OFF.

CRV units without display can be controlled by a service display or through LCD of another CRV unit in the same network group.

The service dipslay must connected on the rear side of the unit.

There are two cables (supply and Ethernet) available inside the compressor / chilled water valve compartment for connection of the service display.
All parameters can be managed through this display, same as from iCOM display.

6 Specifications — Air cooled

6.1 Performances — air cooled

Tab. 6a — Air cooled

	Cond. Temp. 45°C	
	CR011RA	CR021RA
40°C DB - 20% RH		
Net Total kW	11.8	20.9
Net Sensible kW	11.8	20.9
Unit Power Input kW	2.99	5.16
Heat rejection kW	14.79	26.06
Supply Air Temperature °C	26.3	23.8
37°C DB - 24% RH		
Net Total kW	11.6	20.6
Net Sensible kW	11.6	20.6
Unit Power Input kW	3.17	5.49
Heat rejection kW	14.77	26.09
Supply Air Temperature °C	23.7	21.2
35°C DB - 26% RH		
Net Total kW	11.4	20.3
Net Sensible kW	11.4	20.3
Unit Power Input kW	3.30	5.68
Heat rejection kW	14.70	25.98
Supply Air Temperature °C	22	19.5
32°C DB - 29% RH		
Net Total kW	11.2	19.7
Net Sensible kW	11.2	19.7
Unit Power Input kW	3.57	5.94
Heat rejection kW	14.77	25.64
Supply Air Temperature °C	19.4	17.1
30°C DB - 34% RH		
Net Total kW	11	19.4
Net Sensible kW	11	19.4
Unit Power Input kW	3.58	6.14
Heat rejection kW	14.58	25.54
Supply Air Temperature °C	17.6	15.5
28°C DB - 38% RH		
Net Total kW	10.9	19.3
Net Sensible kW	10.9	19.3
Unit Power Input kW	3.63	6.27
Heat rejection kW	14.53	25.57
Supply Air Temperature °C	15.9	13.3
28°C DB - 45% RH		
Net Total kW	11.3	19.7
Net Sensible kW	10.7	17.9
Unit Power Input kW	3.57	6.01
Heat rejection kW	14.87	25.71
Supply Air Temperature °C	16.1	14.8
25°C DB - 45% RH		
Net Total kW	10.7	18.9
Net Sensible kW	10.6	17.7
Unit Power Input kW	3.77	6.40
Heat rejection kW	14.37	25.30
Supply Air Temperature °C	13.3	12
25°C DB - 40% RH		
Net Total kW	10.4	18.6
Net Sensible kW	10.4	18.6
Unit Power Input kW	3.78	6.53
Heat rejection kW	14.18	25.13
Supply Air Temperature °C	13.5	11.2

Specifications — Air cooled

22°C DB - 55% RH		
Net Total kW	10.4	18.6
Net Sensible kW	8.9	15.1
Unit Power Input kW	3.78	6.53
Heat rejection kW	14.18	25.13
Supply Air Temperature °C	12.4	11.1
22°C DB - 50% RH		
Net Total kW	10.1	18.3
Net Sensible kW	9.4	16.1
Unit Power Input kW	3.79	6.60
Heat rejection kW	13.89	24.9
Supply Air Temperature °C	11.8	10.3

— *Cooling capacities are net values. All capacities are nominal values; actual performance will be ±5%.*

NOTE: Data rated with Standard filter. Some options or combinations of options may result in reduced airflow. Consult factory for recommendations.
Refer to Tab 6f for standard air flow.

6.2 Electric data

Wye vs. Delta Connection Power Supply for CRV

The Liebert CRV EC Fan Model is designed to operate with Wye—connected power. It will not operate properly with Delta connected power.
A field—supplied isolation transformer or other power solutions will be needed for proper function. The electronically commutated motors included in the Liebert CRV are suitable for connection to power supplies with a solidly grounded neutral.

Fig. 6a Wye vs. Delta power supply connection diagram

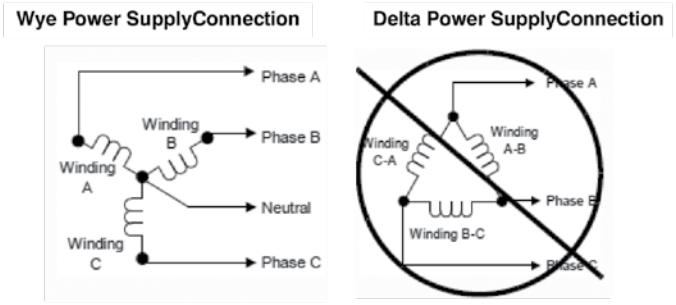

Acceptable Power Supplies—380V to 460V Nominal Units (TT System, TN-S System or TN-C System)

- 380V wye with solidly grounded neutral and 220V line—to—ground
- 460V wye with solidly grounded neutral and 277V line—to—ground.

Unacceptable Power Supplies—380V to 460V Nominal Units (IT System)

- Wye with high—resistance (or impedance) ground
- Delta without ground or with floating ground
- Delta with corner ground
- Delta with grounded center tap.

If the unit must be installed in the IT System, contact Emerson Technical department prior to installation.

Tab. 6b — Electrical data

Configuration	Model	Power supply	FLA [A]	LRA [A]	RESIDUAL—CURRENT CIRCUIT BREAKERS I∆n = 0.3A (400V) (type B)
Cooling	CR011	230 / 1PH / 50Hz	16.48	19.70	25 A "C"
Fan + compressor	CR021	400 / 3N / 50 Hz	16.48	37.70	25 A "C"
Cooling + Electrical heating (dehumidification)	CR011	230 / 1PH / 50Hz	19.20	26.20	32 A "C"
Fan + compressor + electrical heaters	CR021	400 / 3N / 50 Hz	19.20	44.20	32 A "C"
Cooling + Humidification	CR011	230 / 1PH / 50Hz	32.27	39.27	40 A "C"
Fan + compressor + humidifier	CR021	400 / 3N / 50 Hz	29.20	44.20	32 A "C"

Without condensate pump option.
The cables have to be sized in compliance with local standards and according to the type and characteristics (e.g. Amperes) of installation.
The specific power of the user-installed switch, must be lower than 300,000 A^2 x s.
Prescriptions on the differential relay required to the user:

- *For special places (healthcare facilities, etc...) comply with the local regulations;*
- *For ordinary places, a low sensitivity is suggested (300mA) coordinated with the value of the ground heater (IEC364): Ra ≤ 50/Ia (Art. 413.1.4.1, CEI 64-8); only universal (type B, B+) RCD protective devices are permitterd.*
- *In case of frequent over-voltages with mains impulse, it is advisable to install a selective differential and to evaluate the need for adopting other devices.*

COMPONENT	POWER SUPPLY	MODEL	OA (*) [A]	FLA (**) [A]	LRA (**) [A]	NOMINAL POWER [kW]
FAN	230 V/1 PH/50 Hz	CR011	3x0.9	3x1.7	3x0.1	3x2.3
		CR021		5x1.7	5x0.1	5x2.3
COMPRESSOR	230 V/1 PH/50 Hz	CR011	3.75	11	18	2.72
	400 V/3 PH/50 Hz	CR021		21	36	4.66
HUMIDIFIER	230 V/1 PH/50 Hz	CR011	6.5	6.5		1.5
		CR021	6.5	6.5		1.5
ELECTRICAL HEATER	230 V/1 PH/50 Hz	CR011	19.57	19.57		4.5
	400 V/3 PH/50 Hz	CR021	6.5	6.5		4.5
CONDENSATE PUMP	230 V/1 PH/50 Hz	CR011		0.8		0.75
		CR021		0.8		0.75

(*) At nominal operating condition: condensing Temp. 45°C - inlet air condition 37°C 24%RH.
(**) FLA = Max operating current; LRA = Locked rotor Amps.

Specifications — Sound data

6.3 Sound data

Tab. 6c — Liebert CRV Sound Data

The following tables show sound levels for every octave band frequency.

CR011 Air Cooled Tested

Fan Speed %	Airflow m^3/h	Octave band frequency (Hz)										Sound Level [dB(A)]	Unit SPL suction (2m, f.f., dBA)
		Level	31.5	63	125	250	500	1000	2000	4000	8000		
100	3128		79.3	79.3	81.8	81	80.8	77.6	79.8	74.8	67.8	84.8	71.9
80	2700	PWL	75.5	75.5	78	77.2	77	73.8	76	71	64	81	69.2
50	1527		63.5	63.5	66	65.2	65	61.8	64	59	52	69	65.3

CR021 Air Cooled Tested

Fan Speed %	Airflow m^3/h	Octave band frequency (Hz)										Sound Level [dB(A)]	Unit SPL suction (2m, f.f., dBA)
		Level	31.5	63	125	250	500	1000	2000	4000	8000		
100	4630		80.1	80.1	82.6	81.8	81.6	78.4	80.6	75.6	68.6	85.6	72.6
85	4050	PWL	77.4	77.4	79.9	79.1	78.9	75.7	77.9	72.9	65.9	82.9	69.1
50	2183		64.7	64.7	67.2	66.4	66.2	63	65.2	60.2	53.2	70.2	64.5

Level
PWL = *Sound Power Level*

7 Heat Rejections (A version)

7.1 Coupling of Liebert CRV (A—type, 50Hz, CE mark) air conditioning units with remote air—cooled condensers (HCR — MCC)

HCR and MCC condensers are especially designed to be coupled with the Liebert CRV (A type) air conditioning units power supplied at 50Hz (CE market), within a standard range of external air temperature from −20 °C to +46 °C.

The HCR and MCC family comes with a factory—installed stepless fan speed controller especially designed and setted for usage with R410A refrigerant and digital scroll refrigerant circuit.

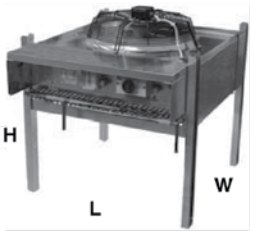

Tab. 7a — Coupling of Liebert HCR Condensers with Liebert CRV 300DX air conditioning units

MODEL	External temperature up to 35°C		External temperature up to 40°C		External temperature up to 46°C	
	standard noise	low noise	standard noise	low noise	standard noise	low noise
CR011RA	1 x HCR17	1 x HCR33	1 x HCR33	1 x HCR43	1 x HCR43	1 x HCR51
CR021RA	1 x HCR33	1 x HCR43	1 x HCR43	1 x HCR51	1 x HCR51	1 x HCR59

Tab. 7b — Coupling of Liebert® MCC Premium Condensers with Liebert® CRV 300DX

MODEL	External temperature up to 35°C	External temperature up to 40°C	External temperature up to 46°C
	standard noise	standard noise	standard noise
CR011RA	1 x MCS028	1 x MCM040	1 x MCM040
CR021RA	1 x MCM040	1 x MCM055	1 x MCL055

Tab. 7c — Coupling of Liebert® MCC Basic Condensers with Liebert® CRV 300DX

MODEL	External temperature up to 35°C	External temperature up to 40°C	External temperature up to 46°C
	standard noise	standard noise	standard noise
CR011RA	1 x MCS028	1 x MCM035	1 x MCM040
CR021RA	1 x MCM035	1 x MCM040	1 x MCL055

The table shows the recommended combinations of the Air cooled Condensers (50Hz — CE mark) with the air conditioners Liebert CRV (50Hz — CE mark), according to the indicated max external air temperature.
Connecting a too large capacity condenser (50% higher than the nominal capacity indicated in Tab. 7a) to the CRV unit can cause malfunctioning and incorrect condenser regulation at low ambient temperature (e.g. in cold season).
The above indications are approximate and must be checked on the basis of other specific operating conditions.
For operating conditions other than those indicated in the table, refer to the New Hirating calculation software and to the air condenser service manual.

Heat Rejections (A version)

Tab. 7d – Technical data and performance of air–cooled condenser Liebert HCR

Model	Power supply [V/Ph/Hz]	Total Heat Rejection (THR)* R410A [kW]	Air Volume [m³/h]	Noise Level ** [dB(A)] @ 5 m, f.f.	Input Power [kW]	Current Absorption [A]	FLA [A]	Refrigerant connections [mm] Gas line [mm]	Refrigerant connections [mm] Liquid line [mm]	Dimensions [mm]	Weight [kg]
HCR17	230/1/50	17.0	4410	44.5	0.27	1.2	1.2	16	16	W 1120 D 856 H 934	60
HCR24	230/1/50	23.98	8600	50.0	0.55	2.5	2.6	16	16	W 1340 D 831 H 1112	60
HCR33	230/1/50	32.2	7400	50.0	0.55	2.5	2.6	16	16	W 1340 D 831 H 1112	75
HCR43	230/1/50	46.0	17000	53.0	1.10	5.0	5.2	16	16	W 2340 D 831 H 1112	92
HCR51	230/1/50	52.0	17000	53.0	1.10	5.0	5.2	22	16	W 2340 D 831 H 1112	93
HCR59	230/1/50	62.0	15600	53.0	1.10	5.0	5.2	22	16	W 2340 D 831 H 1112	102
HCR76	230/1/50	78.0	25500	55.0	1.65	7.5	7.8	22	16	W 3340 D 831 H 1112	136
HCR88	230/1/50	92.0	23400	55.0	1.65	7.5	7.8	22	16	W 3340 D 831 H 1112	165
HCR99	230/1/50	130.0	32000	57.0	2.20	10.0	10.0	28	22	W 4338 D 831 H 1112	220

Tab. 7e – Technical data and performance of air–cooled condenser Liebert HCR 3ph

Model	Power supply [V/Ph/Hz]	Total Heat Rejection (THR)* R410A [kW]	Air Volume [m³/h]	Noise Level ** [dB(A)] @ 5 m, f.f.	Input Power [kW]	Current Absorption [A]	FLA [A]	Refrigerant connections [mm] Gas line [mm]	Refrigerant connections [mm] Liquid line [mm]	Dimensions [mm]	Weight [kg]
HCR24	400/3/50	23.75	8600	53.0	0.55	1.3	1.3	16	16	W 1340 D 831 H 1112	60
HCR33	400/3/50	31.49	7400	53.0	0.55	1.3	1.3	16	16	W 1340 D 831 H 1112	75
HCR43	400/3/50	45.84	17000	56.0	1.10	2.4	2.4	16	16	W 2340 D 831 H 1112	92
HCR51	400/3/50	51.5	17000	56.0	1.10	2.4	2.4	22	16	W 2340 D 831 H 1112	93
HCR59	400/3/50	61.03	15600	56.0	1.10	2.4	2.4	22	16	W 2340 D 831 H 1112	102
HCR76	400/3/50	78.0	25500	58.0	1.65	3.6	3.6	22	16	W 3340 D 831 H 1112	136
HCR88	400/3/50	92.0	23400	58.0	1.65	3.6	3.6	22	16	W 3340 D 831 H 1112	165
HCR99	400/3/50	116.5	33200	59.0	2.20	4.8	4.8	28	22	W 4338 D 831 H 1112	220

Heat Rejections (A version)

Tab. 7f — Technical data and performance of air—cooled condenser Liebert MC Premium

Model	Power supply [V/Ph/Hz]	Total Heat Rejection (THR)* R410A [kW]	Air Volume [m^3/h]	Noise Level ** [dB(A)] @ 5 m, f.f.	Input Power [kW]	Current Absorption [A]	FLA [A]	Refrigerant connections [mm] Gas line [mm]	Refrigerant connections [mm] Liquid line [mm]	Dimensions [mm]	Weight [kg]
MCS028	230/1/50	32.96	8831	49.8	0.473	0.99	4.3	22	22	W 1283 D 1180 H 955	70
MCM040	400/3/50	41.97	11264	54,0	0.636	1.23	1.5	22	22	W 1381 D 972 H 1269	105
MCL055	400/3/50	59.55	15451	62,00	0.920	1.72	3.5	28	28	W 1676 D 1509 H 1105	156
MCM080	400/3/50	83.94	22528	57,00	1.272	2.46	3	28	28	W 2602 D1269 H 972	200
MCL110	400/3/50	112	30902	65,00	2.11	3.96	7	35	35	W 3102 D 1509 H 1102	273
MCM160	400/3/50	168	45056	60,00	2.54	4.92	6	28	28	W 5045 D 1269 H 972	380
MCL165	400/3/50	179	46353	68,00	3.68	2.76	10.5	35	35	W 4527 D 1509 H 1105	404

Tab. 7g — Technical data and performance of air—cooled condenser Liebert MC Basic

Model	Power supply [V/Ph/Hz]	Total Heat Rejection (THR)* R410A [kW]	Air Volume [m^3/h]	Noise Level ** [dB(A)] @ 5 m, f.f.	Input Power [kW]	Current Absorption [A]	FLA [A]	Refrigerant connections [mm] Gas line [mm]	Refrigerant connections [mm] Liquid line [mm]	Dimensions [mm]	Weight [kg]
MCS028	230/1/50	29.6	7452	50.10	0.47	1.73	2.30	22	22	W 1283 D 1180 H 955	70
MCM035	230/1/50	34.50	8000	50.10	0.47	1.73	2.30	22	22	W 1381 D 972 H 1269	105
MCM040	230/1/50	44.78	10600	52.00	0.78	3.75	4,40	22	22	W 1381 D 972 H 1269	105
MCL055	400/3/50	58.60	16250	53.50	1.60	3.60	4.40	28	28	W 1676 D 1509 H 1105	156
MCM070	230/1/50	69.00	16000	53.10	0.94	3.46	8.80	35	35	W 2602 D1269 H 972	200
MCM080	230/1/50	89.56	21200	55.00	1.55	7.50	8.80	35	35	W 2602 D1269 H 972	200
MCL110	400/3/50	117.20	32500	57.00	3.20	7.20	8.80	35	35	W 3102 D 1509 H 1102	273
MCM160	230/1/50	179.12	42400	60,00	3.10	15.00	17.60	28	28	W 5045 D 1269 H 972	380
MCL165	400/3/50	175.80	48750	66.80	4.80	10.8	13.2	35	35	W 4527 D 1509 H 1105	404

(*) The nominal heat rejection capacities refer to the following operative conditions:

- refrigerant R410A
- temperature differences: 15 K
- (T condensation dew point − Toutdoor).
- liquid sub−cooling 3K
- height of the installation = 0 m, above the sea level.
- for different conditions refer to NewHirating program.
- clean exchange surfaces.

(**) The levels of sound pressure here included are measured in the same operative conditions, and are referred to 5 m far from the unit, at 1.5 m in height, in free field conditions.

All air remote condensers are:

Heat Rejections (A version)

- CE marked.
- Conform to the following European Directives:
  Machine Directive 98/37/CE;
  PED 97/23/CEE;
  LVD 2006/95/EC;
  EMC 2004/108/EC (EN61000−6−2; EN 61000−6−3).
- Frame is made up of a sturdy aluminium structure.
- Units are factory equipped with electric board, with main disconnector IP65 and with stepless fan speed controller.
  The entire units have IP54 type of protection.
- Motorized fans are IP54 (DIN60529) , protection class F.
  Maintenance−free ball bearings.
- Most important technical data are gathered in Chap. 7.
- Heat rejection capacity have been measured according to the norm EN327.
  Sound power level have been measured according to the norm UNI EN ISO 3741:2001.
  Sound pressure level have been evaluated according to the norm EN13487, at 5m distance, with free field conditions.
- Max working pressure is 43 barg.

8 Installation drawings

Fig. 8a Overall dimensions / service area

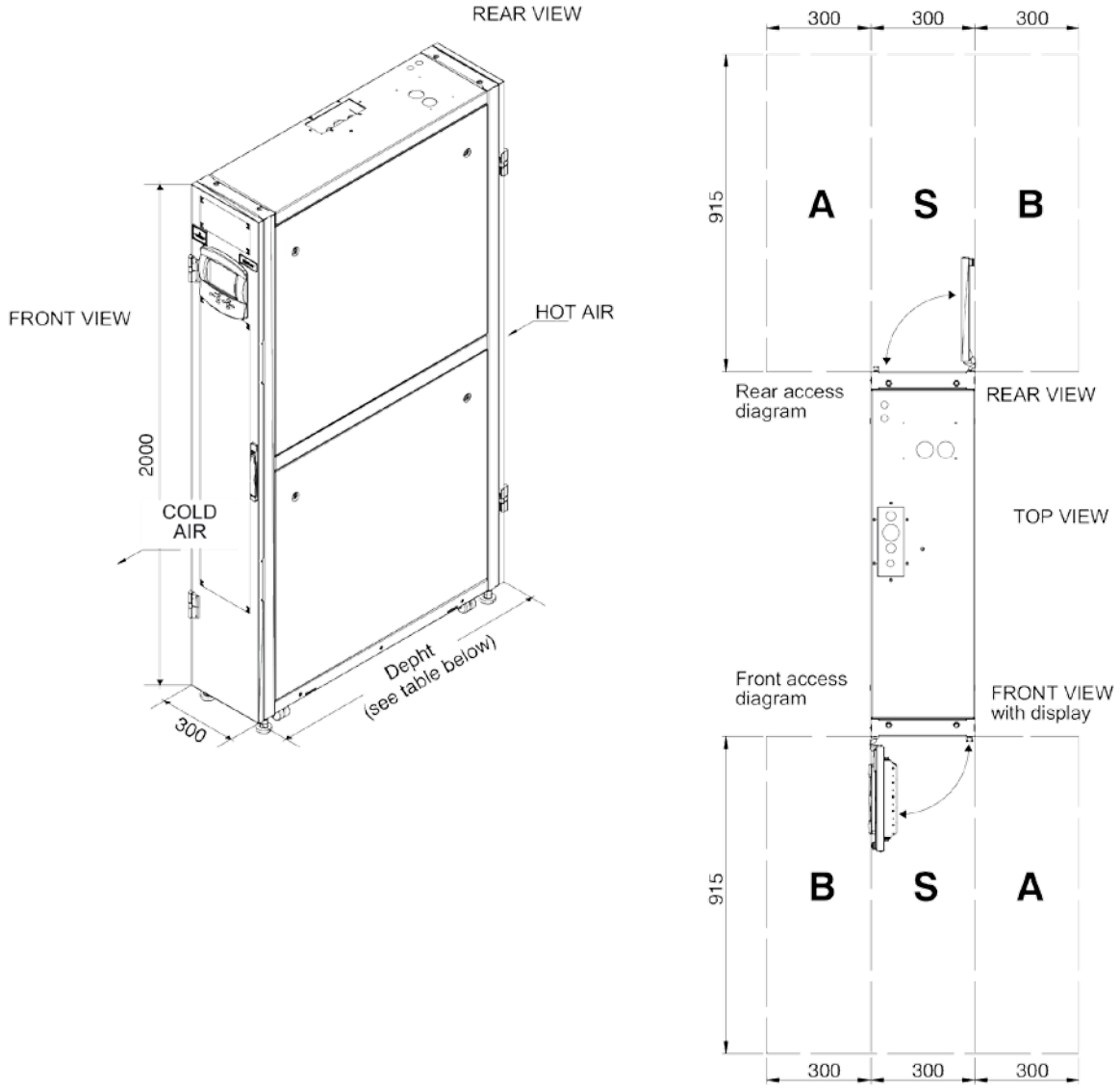

Installation drawings

Access required to install the unit between existing racks within the row only Front or Rear clearance required

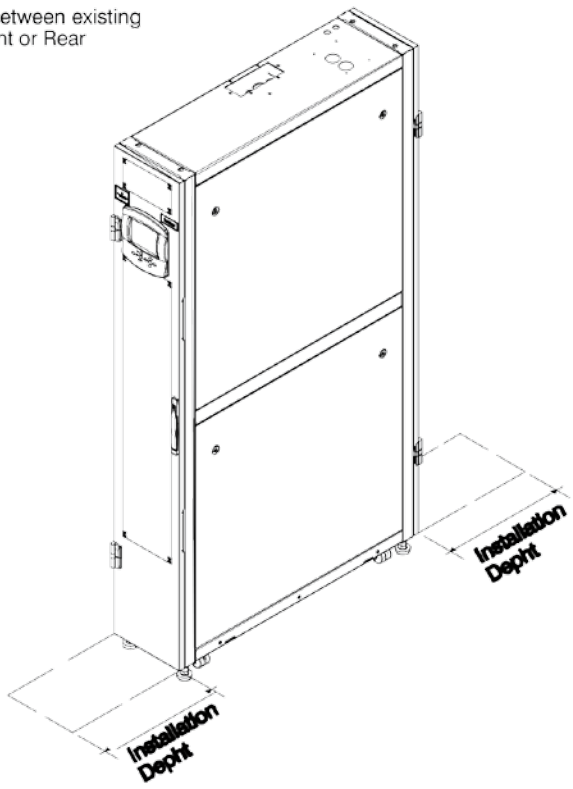

Tab. 8a — Overall dimensions

Models	Height	Depth	Installation depth	Weight
	mm	mm	mm	kg
CR11RA	2000	1100	1250	220
CR21RA	2000	1100	1250	230

Installation drawings

Fig. 8b Hole on the raised floor for piping and electrical connections

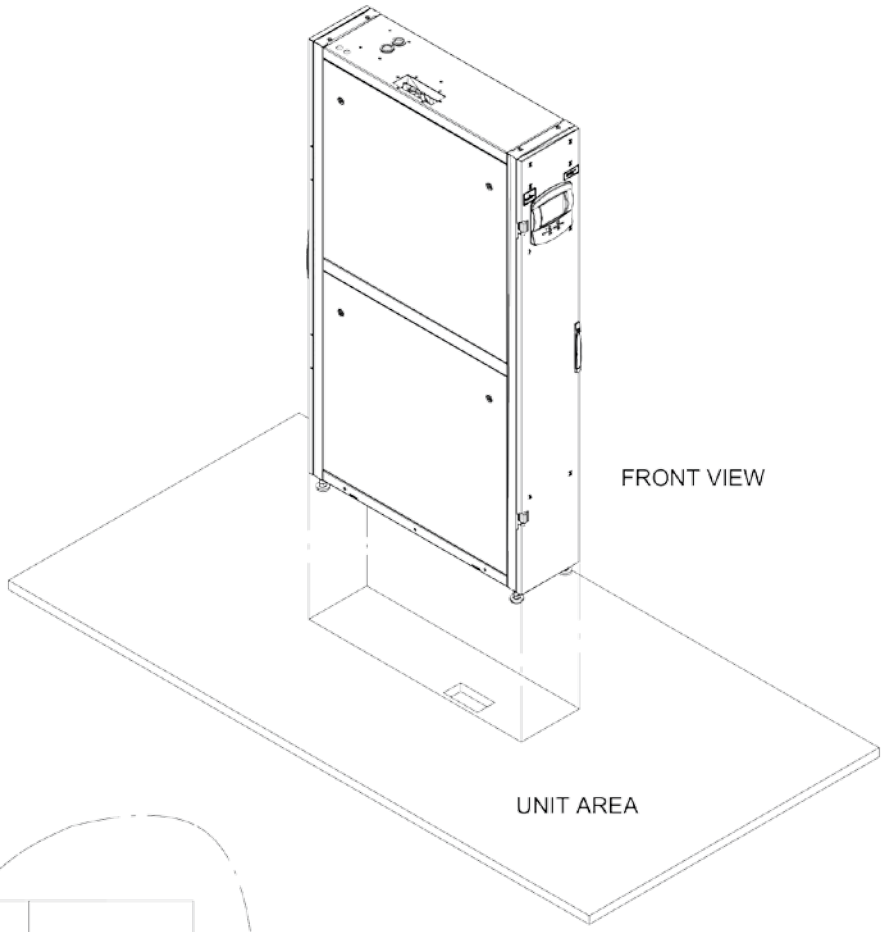

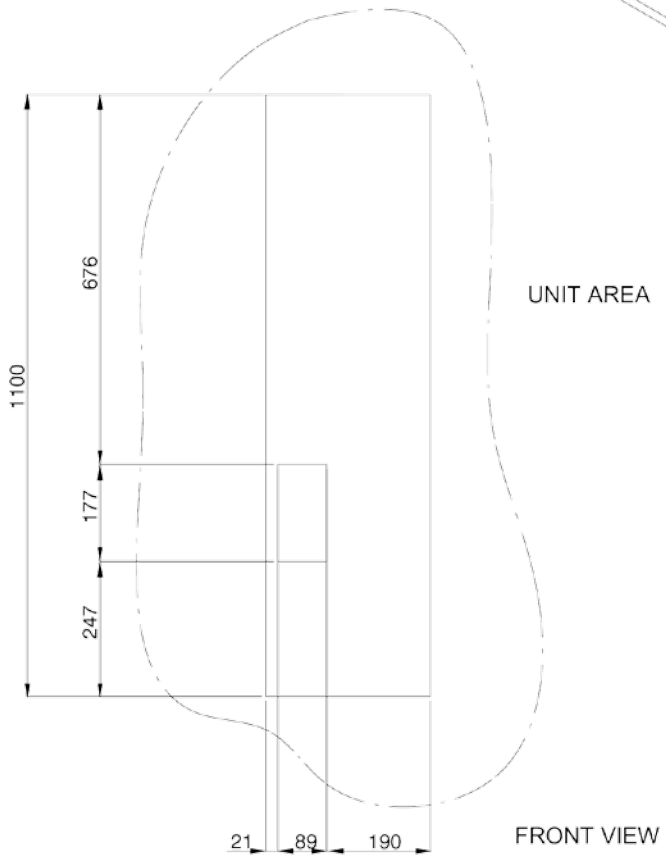

Installation drawings

Fig. 8c Electrical connections - entry

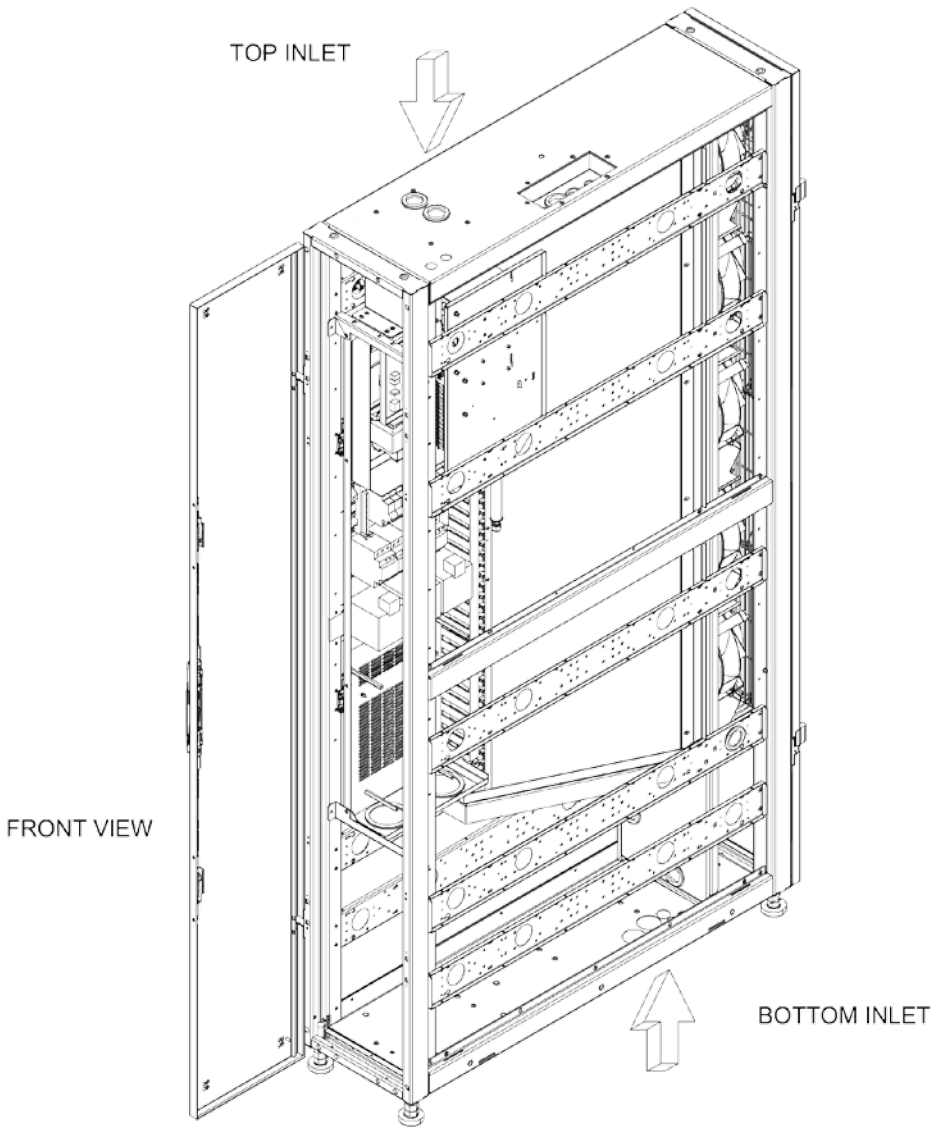

9 Refrigerant, Hydraulic and Electrical Connections

Fig. 9a CR011RA - CR021RA connections

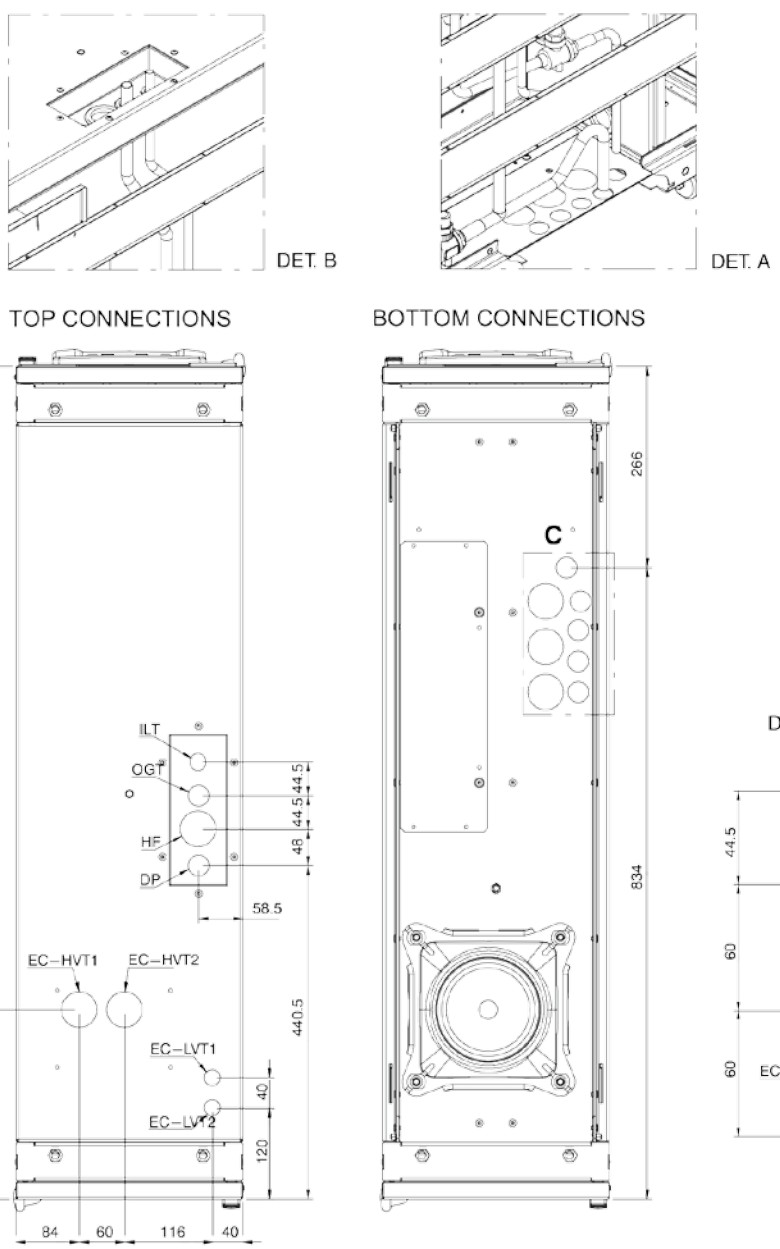

	Unit Top Connection	CR011RA-CR21RA
ILT	Refrigerant liquid line inlet ISO 7/1	OD 12 (Rp ½) CU SWEAT
OGT	Refrigerant gas line outlet ISO 7/1	OD 16 (Rp 5/8) CU SWEAT
CD	Condensate drain - ISO 7/1	
HF	Humidifier feed (opt.) - ISO 7/1	Rp ½
HD	Humidifier drain - ISO 7/1	
DP	Pump drain - ISO 7/1	Rp 5/8
EC-HV1T	Electrical supply - high voltage	ID 48
EC-HV2T	Electrical supply - high voltage	ID 48
EC-LV1T	Electrical supply - low voltage	ID 22
EC-LV2T	Electrical supply - low voltage	ID 22

	Unit Bottom Connection	CR011RA-CR21RA
ILB	Refrigerant liquid line inlet ISO 7/1	OD 12 (Rp½) CU SWEAT
OGB	Refrigerant gas line outlet ISO 7/1	OD 16 (Rp 5/8) CU SWEAT
CD	Condensate drain - ISO 7/1	ID 48
HF	Humidifier feed (opt.) - ISO 7/1	ID 28
HD	Humidifier drain - ISO 7/1	ID 48
DP = CD or HD	Pump drain - ISO 7/1	ID 48
EC-HVB	Electrical supply - high voltage	ID 48
EC-LV1B	Electrical supply - low voltage	ID 28
EC-LV2B	Electrical supply - low voltage	ID 28

Refrigerant, Hydraulic and Electrical Connections

Fig. 9b Electrical board layout

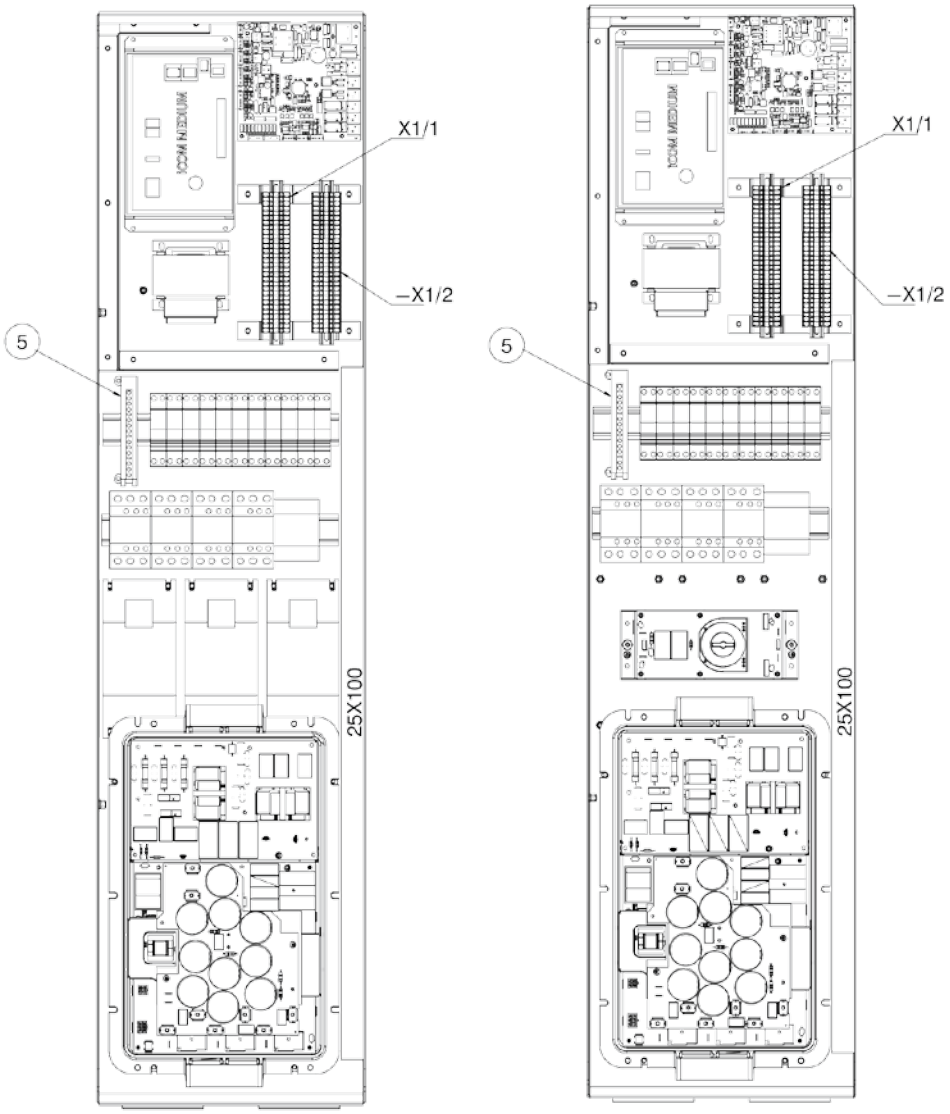

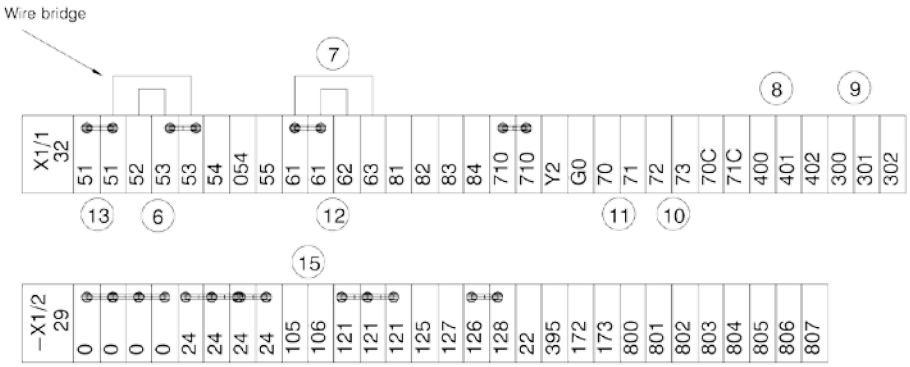

Refrigerant, Hydraulic and Electrical Connections

9.1 Electrical field connections descriptions — 50 Hz

STANDARD ELECTRICAL CONNECTIONS

1. **Primary high voltage entrance** Quantity (2) 28mm diameter concentric knockouts located in bottom of box
2. **Secondary high voltage entrance** Quantity (2) 35mm diameter concentric knockouts located in top of box
3. **Primary low voltage entrance** Quantity (1) 18mm diameter knockouts located in bottom of unit
4. **Secondary low voltage entrance** " Quantity (2) 22mm diameter knockouts located in top of box
5. **Earth ground** — Terminal for field supplied earth grounding wire.
6. **Remote unit shutdown** — Replace existing jumper between terminals 52 & 53 with field supplied normally closed switch having a minimum 75VA, 24VAC rating. Use field supplied Class 1 wiring.
7. **Customer alarm inputs** — Terminals for field supplied, normally closed contacts, having a minimum 75VA, 24VAC rating, between terminals 61 & 63. Use field supplied Class 1 wiring.
8. **General alarm** — On any alarm, normally open dry contact is closed across terminals 400,401 for remote indication. 2 AMP, 24VAC max load. Use Class 1 field supplied wiring.
9. **Warning alarm** — On any alarm, normally open dry contact is closed across terminals 300,301 for remote indication. 2 AMP, 24VAC max load. Use Class 1 field supplied wiring.
10. **Compressor motor on** — On any call for compressor operation, normally open dry contact is closed across terminals 72 & 73,2 AMP, 24VAC max load. Use Class 1 field supplied wiring.
11. **Fan motor on** — On any call for fans operation, normally open dry contact is closed across terminals 70 & 71. 2 AMP, 24VAC max load. Use Class 1 field supplied wiring.

OPTIONAL ELECTRICAL CONNECTIONS

12. **Smoke sensor alarm** (with smoke sensor option)— The smoke sensor is factory installed ,and senses the delivery air;it is connected across terminals 61—62 and send a visual and an audible alarm.
    This smoke sensor is not intended to function as, or replace, any room smoke detection system that may be required by local or national codes. 1 AMP, 24VAC max load. Use Class 1 field supplied wiring.
14. **Condensate alarm** (with condensate pump option) — On pump high water indication, normally open dry contact is closed across purple wire for remote indication install inside the box near the pump. 1 AMP, 24VAC max load. Use Class 1 field supplied wiring.

OPTIONAL LOW VOLTAGE TERMINAL PACKAGE CONNECTIONS

15. **Flooding alarm (liquistat)** — The flooding alarm detects the presence of water and activate an alarm. The sensor is connect across terminals 105 & 106 and up to 5 sensors can be connected to the same flooding alarm device,to control many points in the bottom of the unit.

10 Refrigeration & Hydraulic Circuits

Fig. 10a Liebert CR011RA – CR021RA

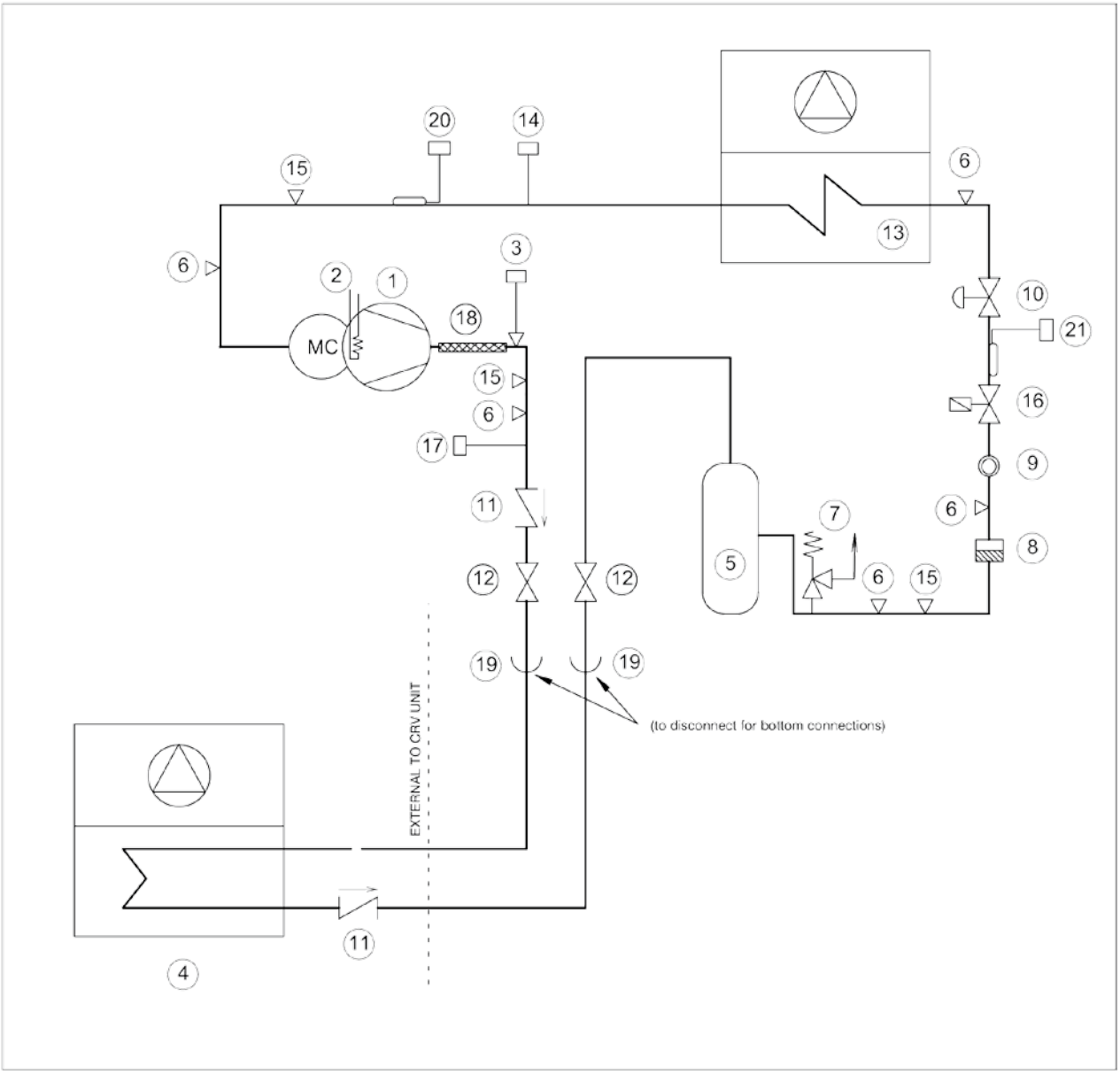

POS.	DESCRIPTION
1	Compressor
2	Crankcase heater
3	High pressure switch (HP)
4	Air cooled condenser
5	Liquid receiver
6	Access valve 5/16
7	Safety relief valve
8	Filter dryer
9	Sight glass
10	Electronic expansion valve (EEV)
11	Check valve

POS.	DESCRIPTION
12	Shut–off valve
13	Evaporating coil
14	Low pressure transducer
15	Access valve 1/4
16	Shut–off solenoid valve
17	High pressure transducer
18	Vibration absorber
19	Cup and fitting (sweat) joint
20	Temperature sensor for EEV
21	Liquid Temperature sensor

Il Fabbricante dichiara che questo prodotto è conforme alle direttive Europee:
The Manufacturer hereby declares that this product conforms to the European Union directives:
Der Hersteller erklärt hiermit, dass dieses Produkt den Anforderungen der Europäischen Richtlinien gerecht wird:
Le Fabricant déclare que ce produit est conforme aux directives Européennes:
El Fabricante declara que este producto es conforme a las directivas Europeas:
O Fabricante declara que este produto está em conformidade com as directivas Europeias:
Tillverkare försäkrar härmed att denna produkt överensstämmer med Europeiska Uniones direktiv:
De Fabrikant verklaart dat dit produkt conform de Europese richtlijnen is:
Valmistaja vakuuttaa täten, että tämä tuote täyättää seuraavien EU- direktiivien vaatimukset:
Produsent erklærer herved at dette produktet er i samsvar med EU- direktiver:
Fabrikant erklærer herved, at dette produkt opfylder kravene i EU direktiverne:
Ο Κατασκευαστής δηλώνει ότι το παρόν προϊόν είναι κατασκευασμένο σύμφωνα με τις οδηγίες της Ε.Ε.:

Application of Liebert® CRV

2.3.2 For A units

Outdoor temperature: lower limit

−20°C

To install an air conditioner in places in which external temperature reaches very low values sometime in the year requires some means of control to maintain adequate condensing pressures to ensure proper liquid system operation.
With low temperatures the refrigerant condensates in pipeline and the liquid tends to fulfill the condenser.

It's **mandatory** to install the following components:

1. NON RETURN VALVE (liquid line)

Install a non− return valve in the liquid line directly out of the condenser. It doesn't allow the liquid to come back to the condenser (that means efficiency loss and dangerous stress for the compressor).

2. VARIEX FAN SPEED CONTROL

Use Variex fan speed control to regulate the condensing pressure and have a continuous and better subcooling control.

It's **suggested** to have:

3. HORIZONTAL CONDENSER POSITION

The condenser horizontal disposition (vertical flow) is necessary to reduce subcooling variations due to direct wind exposure. (very important to have a good subcooling control).
For all exceptions contact the Liebert® Sales Representative.

Outdoor temperature: higher limit

This limit is determined by coupled condenser model. In any case the max external temperature is 48°CExceeding of this limit (or a lack of maintenance), will caused a compressor stop by HP safety thermostat. Reset to normal operation can only be carried out manually.

Remote Condenser

To ensure correct operation, best performance, and longest life the units must be connected to remote condensers approved by Emerson Network Power.
The warranty clauses are no longer valid if unit is connected to a not approved remote condenser.

Relative position room unit vs. 50 Hz remote condenser		
From unit to condenser max distance equivalent length, m (1)	100	
From unit to condenser max geodetic height, m (1) (2)	Max above 30	Max below 8
Requirements		
Pipe diameter (1)	see the User Manual	
Oil traps on vertical line of gas refrigerant, m	every 6	

For lenght higher than 30m condenser oversized +15%.

(1) For more details see User Manual

(2) Positive difference in height: condenser above conditioner. Negative difference in height: condenser below conditioner

2.4 Positioning — Units placement

This chapter provides some ideas of typical installation of the Liebert® CRV unit(s), shows several examples of the server room layouts and applications using Liebert® CRV units.
In order to eliminate the transmission of vibrations, avoid any contacts between Liebert® CRV unit and the racks of the server room. If coverage (e.g. "Smart Aisle™") is installed, avoid its contemporary contact with both, racks and CRV.

For best performances of Liebert® CRV is important to:

- reduce at minimum recirculation from hot aisle around the ends and/or over the top of the racks, prevent gaps between the racks
- reduce at minimum recirculation from hot aisle through server racks by using blanking panels
- ensure cold air is being distributed across the front of all neighboring equipment racks by properly placed Liebert® CRV unit(s)
- distribute load within the rack − it is generally advised to distribute the load as much possible uniformly across the rack height.

For more details refer to following details or contact Emerson Network Power Sales Representative.

Application of Liebert® CRV

2.4.1 Single Row Placement

The Liebert® CRV can be placed either at the end of a row or in between server racks. Locating a Liebert® CRV at the end of a row helps to isolate the end of the cold aisle from the surrounding space; protecting it from hot air wrapping around the sides of the aisle. The 2T rack temperature sensors sample supply and return air temperatures.
When deploying multiple Liebert® CRV, it is recommended that units be installed at the end of rows with their baffles set to direct cold supply air towards the server equipment (Fig. 2b). Depending on row length, heat density and airflow requirements, additional cooling units can be installed throughout the row with their baffles set to direct supply air left and right.

Fig. 2b Liebert® CRV – Single Row Placement

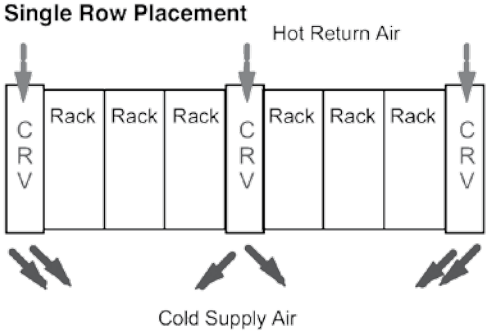

2.4.2 Two Rows Placement

Cooling becomes more effective when there is a barrier or a second row of racks in front of the Liebert® CRV unit. Also in this case it is recommended to install one Liebert® CRV unit at each end of the 2 rows, with their baffles directed towards the IT equipment. Depending on the row length, heat density and airflow requirements, additional cooling units can be installed throughout the row with their baffles set to direct supply air left and right (Fig. 2c).

Fig. 2c Liebert® CRV – Two Rows Placement

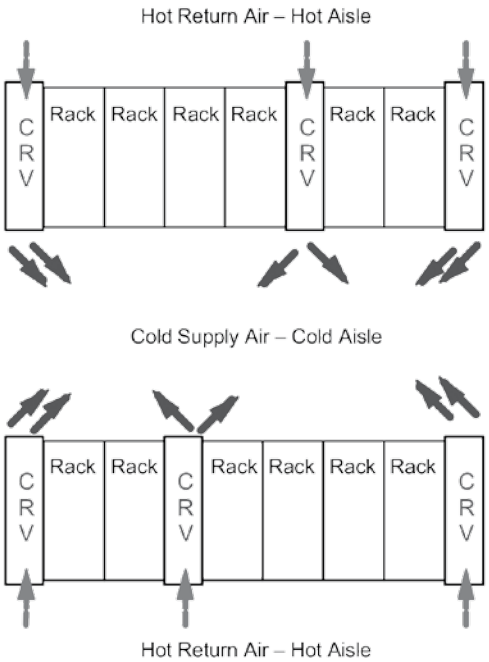

Cooling unit location within a row becomes less critical when deployed in SmartAisle™ containment, but it is recommended that the Liebert® CRV be evenly spaced in each row. Using room barriers, such as walls shown in Fig. 2.d and Fig. 2.e, it can be very effective in simulating aisle containment. When the depths of a Liebert® CRV and neighboring server rack are not the same, it is important to align the front edges of the Liebert® CRV with the front edges of the neighboring server racks to allow for proper air distribution.

Liebert® XDV™

The Liebert XDV top-mounted cooling module provides sensible spot and zone cooling for high heat density equipment.

This flexible, scalable and space saving product mounts on top of the cabinet or suspended from the ceiling, requiring zero floor space. The modular and adaptive design of the Liebert XDV unit also allows it to be easily added as the demand for cooling increases.

It can either draw in hot air directly from inside the cabinet or from the hot aisle, and discharge cool air down into the cold aisle where the electronic equipment air inlets are located.

The Liebert XDV is a part of our high heat-density cooling product family that utilizes pumped refrigerant technology. The pumped refrigerant operates at low pressure in the system and becomes a gas at room conditions, making it ideal for use around electronic equipment. Since the Liebert XD system always provides 100% sensible capacity, the need for humidification is significantly reduced, further reducing energy usage and maintenance.





Smart Module Technology:

Liebert XDV Smart Modules include integrated control boards that provide the following capabilities:

- Save energy by shedding a fan, based on the supply and return air temperature at the module
- Monitor the status of individual fans on the module with an on-unit, red/green LED
- Be alerted to the presence of condensation
- Remotely shutdown the module via dry contact closures

Higher Availability:

- Uses pumped refrigerant, which is ideal for use around electronic equipment.
- Dual (A and B) detachable power cords for increased uptime.
- Complete packaged unit includes enclosure, coil, controls, fans and piping.

Flexibility:

- Scalable.
- Can cool more than 10 kW per rack.
- Smart Module or Standard configurations available.
- No floor space required.
- Complements Liebert precision cooling units.
- Optional pre-charged flexible piping with threaded quick connect fitting allows adaptive and scalable expansion without interruption of cooling operations.
- Flexible installation — mounts on top of the cabinet or suspended from the ceiling.
- Excellent for spot and zone cooling.
- Compatible with Liebert XDP, Liebert XDP with iCOM and Liebert XDC systems.

Lowest Total Cost of Ownership:

- Highly Energy Efficient.
- Superior cost for cooling per high heat density rack.

Techinical Specifications Summary

	XDV8	XDV10
Nominal Capacity, 60 Hz[1]	8.8 kW / 2.5 Ton	10 kW / 2.8 Ton
Nominal Capacity, 50 Hz[1]	8 kW / 2.3 Ton	8 kW / 2.3 Ton
Nominal Airflow, 60 Hz	1000 CFM (1700 m^3/h)	
Nominal Airflow, 50 Hz	830 CFM (1410 m^3/h)	
Input Voltage	120 V, 1 ph, 60 Hz 230 V, 1 ph, 50/60 Hz	
Full load amps	2A @ 120V, 1ph, 60 Hz 1A @ 230V, 1ph, 50 Hz	
Audible Noise, 60 Hz / 50 Hz	78 dBa / 73 dBa Sound Power	
Height, module only	14" (355 mm)	
Width	23" (581 mm)	
Depth	29.5"-39.5" (749-1003 mm)	
Weight, empty	77 lbs (35 kg)	
Options	Quick Connect Couplings (for Flexible Piping) Condensate Detection (dry contacts)	

[1] Nominal Capacity Rating is @ 55°F (13°C) Entering Fluid Temperature and 98°F (37°C) Entering Air Temperature.
Max capacity 60Hz: XDV8 - 8.8kW @ 95 F (35 C), XDV10 - 11.8kW @ 106 F (41 C)
Max capacity 50Hz: XDV8 - 8.8kW @ 103 F (39 C), XDV10 - 11.8kW @ 116 F (47 C)

Liebert XD Hydraulic System Schematic

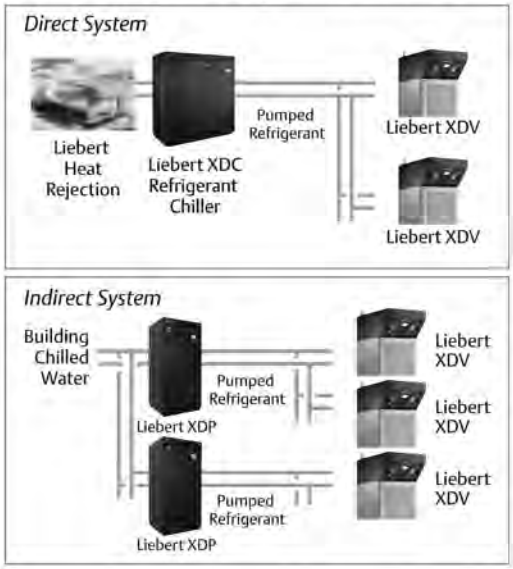

The indoor Liebert XDC refrigerant chiller is specifically designed to support the Liebert XD cooling modules. The Liebert XDC connects directly to the XD modules.

When a building chilled water system is available, the Liebert XDP pumping unit is utilized as an interface between the pumped refrigerant circuit and the chilled water system.

Both the Liebert XDC and the XDP units circulate the refrigerant to Liebert XD units, while maintaining the refrigerant at a temperature always above the actual dewpoint.



The Liebert XDV works extremely well with the "hot aisle-cold aisle" approach.

Guide Specification for Liebert XDV

1.0 GENERAL

1.1 SUMMARY

These specifications describe requirements for an air conditioning system designed for cooling of high heat density equipment. The system shall be designed to maintain conditions within the space with heat emitting equipment. The manufacturer shall design and furnish all equipment to be fully compatible with heat dissipation requirements of the site.

1.2 DESIGN REQUIREMENTS

The air conditioning system shall be a Liebert XDV factory-assembled unit. The unit shall be designed for draw-through air arrangement to ensure even air distribution to the entire face area of the coils.

1.3 SUBMITTALS

Submittals shall be provided with the proposal and shall include: Dimensional, Electrical and Capacity data; typical Piping and Electrical Connection Drawings.

1.4 WARRANTY

The system shall be provided with a warranty against defects in material and workmanship.

1.5 QUALITY ASSURANCE

The specified system shall be factory-tested before shipment and designed to meet NRTL requirements. The system shall be designed and manufactured according to world-class quality standards. The manufacturer shall be ISO 9001 certified.

2.0 PRODUCT

2.1 STANDARD FEATURES

2.1.1 XDV Module

XDV module shall include cooling coil and fans housed in a cabinet and be rated at 55°F (12.8°C) entering fluid temperature, 98°F (36.6°C) entering air temperature and 50°F (10°C) or lower dew point.

- XDV8 (60Hz) - Nominal cooling capacity of 8 kW (27,300 BTUH) at 1,000 CFM (1,700 m^3/h)
- XDV10 (60Hz) - Nominal cooling capacity of 10 kW (34,000 BTUH) at 1,000 CFM (1,700 m^3/h)
- XDV8 (50Hz) - Nominal cooling capacity of 6.5 kW (22,200 BTUH) at 833 CFM (1,400 m3 /h)
- XDV10 (50Hz) - Nominal cooling capacity of 8.3 kW (28,300 BTUH) at 1,000 CFM (1,700 m^3/h)

2.1.2 Cooling

Fluid shall be supplied to the XDV from a Liebert XD Pumping Unit or a Liebert XD refrigerant chiller to prevent coil condensation and optimize the leaving fluid temperature.

2.1.3 Fans

Each module shall consist of two (2) axial 8" fans with finger guards.

2.1.4 Electrical

Each module shall be equipped with two (2) detachable 10 ft. (3.05 m) power cords, primary and secondary, attached with IEC connectors to the rear of the unit. Each cord shall have a NEMA 5-15P (IEC 320-C14) plug at the end.

2.1.5 Sound

The sound power rating with all fans running at maximum speed shall not exceed 80 dB(A) per XDV module.

2.1.6 Piping

Factory-installed piping shall be leak-tested and pressure-tested prior to shipment from the factory.

2.1.7 Dual Power Cords

Each module shall have dual power cords with automatic switching.

2.2 OPTIONAL FEATURES XDV

2.2.1 Smart Module

The XDV is available with an optional factory-installed control board and condensate detection for the drip pan. The module shall have connection points (dry contacts) in the electrical box for connection of outgoing alarm cables for condensate detection, fan failure and remote shutdown.

2.2.2 Pipe Connection - Flexible Piping

The XDV is available with optional factory-installed "one-shot" type or removable pipe connections (for field connection of Flexible Piping).

2.3 ELECTRICAL REQUIREMENTS

Each XDV module shall require 2 FLA at 120V-1ph-60Hz or 1 FLA at 230V-1ph-50Hz.

3.0 EXECUTION

3.1 INSTALLATION OF XDV

3.1.1 General

Install the unit in accordance with the manufacturer's installation instructions. Maintain recommended service clearances as outlined in the installation instructions.

3.1.2 Piping Connections

Install and connect devices furnished by the manufacturer but not specified to be factory-mounted. Furnish a copy of the manufacturer's piping connection diagram submittal to the piping contractor.

3.1.3 Supply and Return Piping

Connect supply and return connections to the XDV module.

3.2 FIELD QUALITY CONTROL

3.2.1 Startup

Start up the air conditioning unit in accordance with the manufacturer's startup instructions. Test controls and demonstrate compliance with requirements.

NOTE: These Guide Specifications comply with the outlines of the Construction Specifications Institute per CSI MP-2-1 and MP-2-2. In correspondence, reference Liebert document SL-16627_REV02_06-09.

Detailed Technical Specification

Table 5 Liebert XDV10 specifications

Models	XDV10BK--*; XDV10DK--* XDV10BKP-*; XDV10DKP-* XDV10BK-E*; XDV10DK-E* XDV10BKPE*; XDV10DKPE* XDV10BKR-*; XDV10BKRE* XDV10DKR-*; XDV10DKRE*	XDV10BT--*; XDV10DT--* XDV10BTP-*; XDV10DTP-* XDV10BT-E*; XDV10DT-E* XDV10BTPE*; XDV10DTPE* XDV10BTR-*; XDV10BTRE* XDV10DTR-*; XDV10DTRE*		XDV10BS--*; XDV10DS--* XDV10BSP-*; XDV10DSP-* XDV10BS-E*; XDV10DS-E* XDV10BSPE*; XDV10DSPE* XDV10BSR-*; XDV10BSRE* XDV10DSR-*; XDV10DSRE*
	60 Hz	60 Hz	50 Hz	50 Hz
Cooling Capacity	Nominal (98°F [37°C] EAT): 10kW / 2.8 Tons Maximum (106°F [41°C] EAT): 11.8kW/3.4 Tons		Nominal (98°F [37°C] EAT): 8kW / 2.3 Tons Maximum (116°F [47°C] EAT): 11.8kW/3.4 Tons	
Conditions	Capacity Rating is @ 55°F (13°C) Entering Fluid Temperature and 50°F (10°C) or lower dew point, rear air inlet.			
Electrical Requirements				
Input	120V model: 1ph-60 Hz	230V model: 1ph-60 Hz	230V model: 1ph-50 Hz	
Input power connections	2 power connections, each model			
Full Load Amps	120V model: 2.0A	230V model: 1.0A		
Power consumption, nominal, watts	180	190	190	190
Dimensions, inches (mm)				
Height – unit only	14 (355) not including pipe connections			
Height – including hard pipe connections	18-5/8 (473)			
Height – including one-shot connections	19-5/8 (498)			
Width	22-7/8 (581)			
Depth – Top	39-1/2 (1003)			
Depth – Bottom	29-5/8 (752)			
Weight, lb (kg)				
Unit only	77 (35)			
Shipping weight	125 (57)			
Installed, with refrigerant	79 (36)			
Number of fans	2	2	2	2
Airflow, Nominal, ft^3/ min (m^3/ hr)	1000 (1699) with rear inlet. Bottom inlet airflow may be less, depending on restrictions inside cabinet		833 (1415) with rear inlet. Bottom inlet airflow may be less, depending on restrictions inside cabinet	
Audible noise	78 dBa sound power		73 dBa sound power	
Pipe Connections (without Liebert Flex Pipe)				
Refrigerant supply from Liebert XDP/ XDC	1/2" OD, Cu, (optional 1/2" threaded coupler flex piping)			
Refrigerant return to Liebert XDP/ XDC	5/8" OD, Cu, (optional 3/4" threaded coupler flex piping)			
Serviceable Parts	Fans and electrical components			
Cabinet Exterior Finish	Black, matte finish, heat-fused powder coat			
Options				
Condensate sensing (factory-installed)	Dry contact outgoing signal			
Pre-Charged Refrigerant	R-134a Refrigerant, one-shot connections			
Agency				
Approvals	CSA 60Hz		CSA 50Hz	CE 50Hz

Table 6 Liebert XDV8 specifications

Models	XDV8BK--*; XDV8DK--* XDV8BKP-*; XDV8DKP-* XDV8BK-E*; XDV8DK-E* XDV8BKPE*; XDV8DKPE* XDV8BKR-*; XDV8DKRE* XDV8DKR-*; XDV8DKRE*	XDV8BT--*; XDV8DT--* XDV8BTP-*; XDV8DTP-* XDV8BT-E*; XDV8DT-E* XDV8BTPE*; XDV8DTPE* XDV8BTR-*; XDV8BTRE* XDV8DTR-*; XDV8DTRE*		XDV8BS--*; XDV8DS--* XDV8BSP-*; XDV8DSP-* XDV8BS-E*; XDV8DS-E* XDV8BSPE*; XDV8DSPE* XDV8BSR-*; XDV8BSRE* XDV8DSR-*; XDV8DSRE*
	60 Hz	60 Hz	50 Hz	50 Hz
Cooling Capacity	Nominal (98°F [37°C] EAT): 8.8kW / 2.5 Tons Maximum (95°F [35°C] EAT): 8.8kW / 2.5 Tons		Nominal (98°F [37°C] EAT): 8kW/2.3 Tons Maximum (103°F [39°C] EAT): 8.8kW/2.5Tons	
Conditions	Capacity rating is @ 55°F (13°C) Entering Fluid Temperature and 50°F (10°C) or lower dew point, rear air inlet.			
Electrical Requirements				
Input	120V model: 1ph-60 Hz	230V model: 1ph-60 Hz	230V model: 1ph-50 Hz	
Input power connections	2 power connections, each model			
Full Load Amps	120V model: 2.0A	230V model: 1.0A		
Power consumption, nominal, watts	180	190	190	190
Dimensions, inches (mm)				
Height – unit only	14 (355) not including pipe connections			
Height – including pipe connections	18-5/8 (473)			
Width	22-7/8 (581)			
Depth – Top	39-1/2 (1003)			
Depth – Bottom	29-5/8 (752)			
Weight, lb (kg)				
Unit only	77 (35)			
Shipping weight	125 (57)			
Installed, with refrigerant	79 (36)			
Number of Fans	2	2	2	2
Airflow, Nominal, ft^3/ min (m^3/ hr)	1000 (1699) with rear inlet. Bottom inlet airflow may be less, depending on restrictions inside cabinet		833 (1415) with rear inlet. Bottom inlet airflow may be less, depending on restrictions inside cabinet	
Audible noise	78 dBa sound power		73 dBa sound power	
Pipe Connections (without Liebert Flex Pipe)				
Refrigerant Supply from Liebert XDP/Liebert XDC	1/2" OD Cu, (optional 1/2" threaded coupler flex piping)			
Refrigerant Return to Liebert XDP/Liebert XDC	5/8" OD Cu, (optional 3/4" threaded coupler flex piping)			
Serviceable Parts	Fans and electrical components			
Cabinet Exterior Finish	Black, matte finish, heat-fused powder coat			
Options				
Condensate sensing (factory-installed)	Dry contact outgoing signal			
Pre-Charged	R-134a Refrigerant, one-shot connections			
Agency				
Approvals	CSA 60Hz		CSA 50Hz	CE 50Hz

Table 7 Liebert XD Liebert Flex Pipe assemblies, supply and return

Description	Liebert P/N Straight Connection Assembly	Liebert P/N 90-Degree Connection Assembly	Length ft (m)	Minimum Bend Radius inches (mm)	
				Supply	Return
Liebert XD Flex Pipe Kit	186568G1	186567G1	6 (1.8)	7 (178)	8 (203)
	186568G2	186567G2	10 (3.0)		
	186568G3	186567G3	8 (2.5)		
	186568G4	186567G4	4 (1.2)		

Submittal Drawings

Figure 8 Liebert XDV dimensions

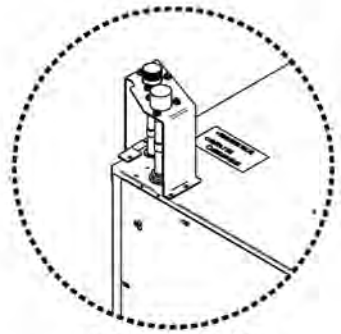

Liebert XDV With Pre-charged Option (all dimensions except piping height are the same as for the hard-piped setup, see Table 2)

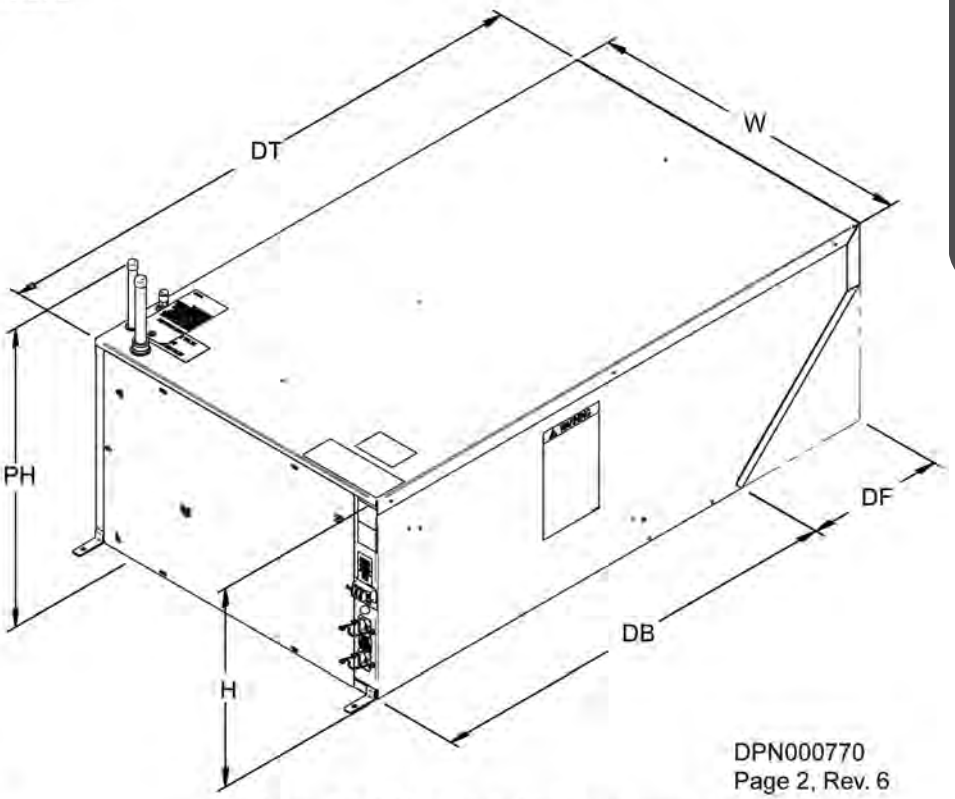

DPN000770
Page 2, Rev. 6

Liebert XDV With Hard-piped Arrangement

Table 2 Dimensional data

Illustration Key	Dimension	Measurement, in (mm)
DT	Depth Top	39-1/2 (1003)
DB	Depth Bottom	29-5/8 (752)
W	Width	22-7/8 (581)
H	Height	14 (356)
PH	Piping Height, hard-piped	18-5/8 (473)
	Piping Height, one-shot option	19-5/8 (498)
DF	Depth Front	9-7/8 (250)

This page is intentionally left blank.

Liebert® XDH™

The modular, Liebert XDH Horizontal Row Cooler provides efficient and economical cooling for high heat density equipment. The Liebert XDH is placed in line with rack enclosures and air from the hot aisle is drawn in through the rear of the unit, cooled, and discharged into the cold aisle where the electronic equipment air inlets are located. The Liebert XDH draws directly from the hot aisle, allowing the unit to take advantage of higher heat transfer efficiency.

The Liebert XDH is a part of our high heat-density cooling product family that utilizes pumped refrigerant technology.The pumped refrigerant operates at low pressure in the system and becomes a gas at room conditions, making it ideal for use around electronic equipment.

Since the Liebert XD system always provides 100% sensible capacity, the need for humidification is significantly reduced, further reducing energy usage and maintenance.

The modular and adaptive design of the Liebert XDH unit also allows it to be easily added as the demand for cooling increases.



Reliability:

- Can cool more than 30 kW per rack.
- Dual (A and B) detachable power cords for increased uptime.
- Uses pumped refrigerant which is ideal for use around electronic equipment.
- Two pumped refrigerant circuits.

Flexibility:

- Complements Liebert precision cooling units.
- Optional pre-charged flexible piping with threaded quick connect fittings allows adaptive and scalable expansion without interruption of cooling operations.
- Flexible installation.
- Complete packaged unit includes enclosure, coils, controls, fans and piping.

Low Total Cost of Ownership:

- Superior cost for cooling per high heat density rack.
- Highly energy efficient.

Technical Specifications Summary

Model Size	XDH20	XDH32
Nominal Capacity, 60 Hz[1]	22 kW /6.3 Ton	30 kW / 8.5 Ton
Nominal Capacity, 50 Hz [2]	19 kW /5.4 Ton	27 kW / 7.7 Ton
Nominal Airflow, 60 Hz	2500 CFM (4200 m^3/h)	4000 CFM (6800 m^3/h)
Nominal Airflow, 50 Hz	2100 CFM (3500 m^3/h)	3300 CFM (5600 m^3/h)
Input Voltage	120 V, 1 ph, 60 Hz 230 V, 1 ph, 50 Hz	
Power Draw	500 W	1200 W
Full load amps	4.2 A @ 120V	10.5 A @ 120V
Number of Fans	6	
Sound Power Level	81 dBA	86 dBA
Height (unit only)	78" (1982 mm)	
Width	12" (300 mm)	
Depth	42" (1066 mm)	
Weight	246 lbs (112 kg)	
Options	Quick Connect Couplings (for Flexible Piping)	
	Condensate Detection (dry contacts)	
	Diffuser for front air discharge to both sides or to one side.	

[1] Nominal Capacity Rating @ 55˚F (13˚C) Entering Fluid Temperature and 98˚F (37˚C) Entering Air Temperature. Max Capacity @ 55˚F (13˚C) EFT and 105˚F (40˚C) EAT is 25.5 kW and 34.5 kW, respectively.

[2] Nominal Capacity Rating @ 55˚F (13˚C) Entering Fluid Temperature and 98˚F (37˚C) Entering Air Temperature. Max Capacity @ 55˚F (13˚C) EFT and 116˚F (47˚C) EAT is 25.5 kW for XDH20 and 34.5 kW @ 108˚F (42˚C) EAT for XDH32.

Guide Specification for Liebert XDH

1.1 SUMMARY

These specifications describe requirements for an air conditioning system designed for cooling of high heat density equipment. The system shall be designed to maintain conditions within the space with heat emitting equipment. The manufacturer shall design and furnish all equipment to be fully compatible with heat dissipation requirements of the site.

1.2 DESIGN REQUIREMENTS

The air conditioning system shall be a Liebert XDH factory-assembled unit. The unit shall be designed for draw-through air arrangement to ensure even air distribution to the entire face area of the coils.

1.3 SUBMITTALS

Submittals shall be provided with the proposal and shall include: Dimensional, Electrical and Capacity data; typical Piping and Electrical Connection.

1.4 WARRANTY

The system shall be provided with a warranty against defects in material and workmanship.

1.5 QUALITY ASSURANCE

The specified system shall be factory-tested before shipment and designed to meet NRTL requirements. The system shall be designed and manufactured according to world-class quality standards. The manufacturer shall be ISO 9001 certified.

2.0 PRODUCT

2.1 STANDARD FEATURES XDH

2.1.1 XDH Module

XDH module shall include micro channel cooling coils and fans housed in a cabinet and be rated at 55°F (12.8°C) entering fluid temperature, 98°F (37°C) entering air temperature, 50°F (10°C) or lower dew point.

- XDH20 (60Hz) - Nominal cooling capacity of 22 kW (75,000 BTUH) at 2,500 CFM (4,200 m^3/h)
- XDH32 (60Hz) - Nominal cooling capacity of 30 kW (102,000 BTUH) at 4,000 CFM (6,800 m^3/h)
- XDH20 (50Hz) - Nominal cooling capacity of 22 kW (75,000 BTUH) at 2,428 CFM (4,125 m^3/h)
- XDH32 (50Hz) - Nominal cooling capacity of 30 kW (102,000 BTUH) at 3,850 CFM (6,541 m^3/h)

2.1.2 Cooling

Fluid shall be supplied to the XDH from a Liebert XD Pumping Unit (XDP) or a Liebert XD Chiller (XDC) to prevent coil condensation and optimize the fluid temperature to the XDH module.

2.1.3 Fans

Each module shall consist of six (6) axial fans with finger guards.

2.1.4 Electrical

Each module shall be equipped with two (2) 10 ft. (3.0 m) power cords, primary and secondary, attached with IEC connectors to the rear of the unit. Each cord shall have a NEMA 5-15P (IEC 320-C14) plug at the end. CE listed version of the unit shall have permanently attached power cords.

2.1.5 Piping

Factory-installed piping shall be leak-tested and pressure-tested prior to shipment from the factory.

2.1.6 Dual Power Cords

Each module shall have dual power cords with automatic switching.

2.2 OPTIONAL FEATURES XDH

2.2.1 Condensate Detection

The XDH is available with optional factory-installed condensate detection for the drip pan. The condensate detection shall have connection points (dry contacts) in the electrical box for connection of outgoing alarm cables.

2.2.2 Pipe Connection

The XDH is available with optional factory-installed "one-shot" type pipe connections (for field connection of Flexible Piping).

2.2.3 Front Air Discharge Diffuser

The XDH is available with different front air discharge diffusers; for front air discharge to both sides or for front air discharge to one side.

2.3 ELECTRICAL REQUIREMENTS

Each XDH32 module shall require 10 FLA at 120V-1ph-60Hz or 5 FLA at 230V-1ph-50Hz, respectively.

Each XDH20 module shall require 5 FLA at 120V-1ph-60Hz or 2.5 FLA at 230V-1ph-50Hz, respectively.

3.0 EXECUTION

3.1 INSTALLATION OF XDH

3.1.1 General

Install the unit in accordance with the manufacturer's installation instructions. Maintain recommended service clearances as outlined in the installation instructions.

3.1.2 Piping Connections

Install and connect devices furnished by the manufacturer but not specified to be factory-mounted. Furnish a copy of the manufacturer's piping connection diagram submittal to the piping contractor.

3.1.3 Supply and Return Piping

Connect supply and return connections to the XDH module.

3.2 FIELD QUALITY CONTROL

3.2.1 Startup

Start up the air conditioning unit in accordance with the manufacturer's startup instructions. Test controls and demonstrate compliance with requirements.

NOTE: These Guide Specifications comply with the outlines of the Construction Specifications Institute per CSI MP-2-1 and MP-2-2. In correspondence, reference Liebert document SL-17205_REV02_01-07.

Detailed Technical Specification

Table 3 Liebert XDH specifications

Models	XDH20DKP-0 XDH20DK--0 XDH20BKP-0 XDH20BK--0 XDH20DKPE0 XDH20DK-E0 XDH20BKPE0 XDH20BK-E0 (60Hz)	XDH32DKP-0 XDH32DK--0 XDH32BKP-0 XDH32BK--0 XDH32DKPE0 XDH32DK-E0 XDH32BKPE0 XDH32BK-E0 (60Hz)	XDH20DSP-0 XDH20DS--0 XDH20BSP-0 XDH20BS--0 XDH20DSPE0 XDH20DS-E0 XDH20BSPE0 XDH20BS-E0 (50/60Hz)	XDH32DSP-0 XDH32DS--0 XDH32BSP-0 XDH32BS--0 XDH32DSPE0 XDH32DS-E0 XDH32BSPE0 XDH32BS-E0 (50/60Hz)
Cooling Capacity	**XDH20**, 60Hz Nominal (98°F [37°C] EAT): 22kW/6.3 Tons **XDH20**, 60Hz Maximum (105°F [40°C] EAT): 25.5kW/7.3 Tons **XDH20**, 50Hz Nominal (98°F [37°C] EAT): 19kW / 5.4 Tons **XDH20**, 50Hz Maximum (116°F [47°C] EAT): 25.5kW/7.3 Tons **XDH32**, 60Hz Nominal (98°F [37°C] EAT): 30kW/8.5 Tons **XDH32**, 60Hz Maximum (105°F [40°C] EAT): 34.5kW/7.3 Tons **XDH32**, 50Hz Nominal (98°F [37°C] EAT): 27kW / 7.7 Tons **XDH32**, 50Hz Maximum (108°F [42°C] EAT): 34.5kW/7.3 Tons			
Conditions	Capacity rating is @ 55°F (13°C) Entering Fluid Temperature and 50°F (10°C) or lower dew point			
Electrical Requirements				
Input	120V-1ph-60Hz		220-240V-1ph-50Hz, CE / 208-240V-1ph-60Hz, CSA	
Input Power Connections	Two IEC320-C14 power inlets and two IEC power cords with NEMA 5-15P connectors		Two IEC320-C14 power inlets and two IEC power cords with IEC320-C14 receptacles	
Full Load Amps	5	10	2.5	5
Power Consumption, Nominal, Watts	600	1200	575	1150
Dimensions, inches (mm)				
Height—Unit Only	78 (1981)			
Height—Including Pipe Connections	80 (2032)			
Width	12 (305)			
Depth	42 (1067)			
Weight, lb (kg)				
Unit Only	233 (106)	246 (112)	233 (106)	246 (112)
Shipping Weight	317 (144)	330 (150)	317 (144)	330 (150)
Number of Fans	6			
Airflow, Nominal, ft^3/min (m^3/hr)	2500 (4248)	4000 (6796)	2428 (4125)	3850 (6541)
Audible Noise, Sound Power	81 dBa	86 dBa	81 dBa	86 dBa
Pipe Connections				
Refrigerant Supply	1/2" OD, Cu (optional 1/2" threaded one-shot coupling on the unit)			
Refrigerant Return	7/8" OD, Cu (optional 7/8" threaded one-shot coupling on the unit)			
Serviceable Parts	Fans and electrical components			
Cabinet Exterior Finish	Black, matte finish, heat-fused powder coat			
Options	Condensate Sensing (factory-installed) Dry contact outgoing signal (24VAC - 1A maximum)			
	One-shot style flex pipe connections			
	Uni-directional or bi-directional air diffusers			
Agency				
Approvals	CSA 60Hz		CE 50Hz, CSA 50/60Hz	

Table 4 Liebert XD Flex Pipe assemblies, supply and return

Description	Liebert P/N Straight Connection Assembly	Liebert P/N 90-Degree Connection Assembly	Length ft (m)	Minimum Bend Radius inches (mm)	
				Supply	Return
Liebert XD Flex Pipe Kit	186566G1	186565G1	6 (1.8)	7 (178)	9 (229)
	186566G2	186565G2	10 (3.0)		
	186566G3	186565G3	8 (2.5)		
	186566G4	186565G4	4 (1.2)		

Submittal Drawings

4.0 MECHANICAL CONSIDERATIONS

4.1 Determining Placement in the Conditioned Space

The Liebert XDH units should be placed among the cabinets that generate the greatest amount of heat. If heat loads are dispersed evenly throughout the room, the Liebert XDH modules may be spread out accordingly.

The Liebert XDH is engineered to fit among computer enclosure cabinets. **Figure 8**, below, illustrates the unit's dimensions.

Figure 8 Liebert XDH dimensions

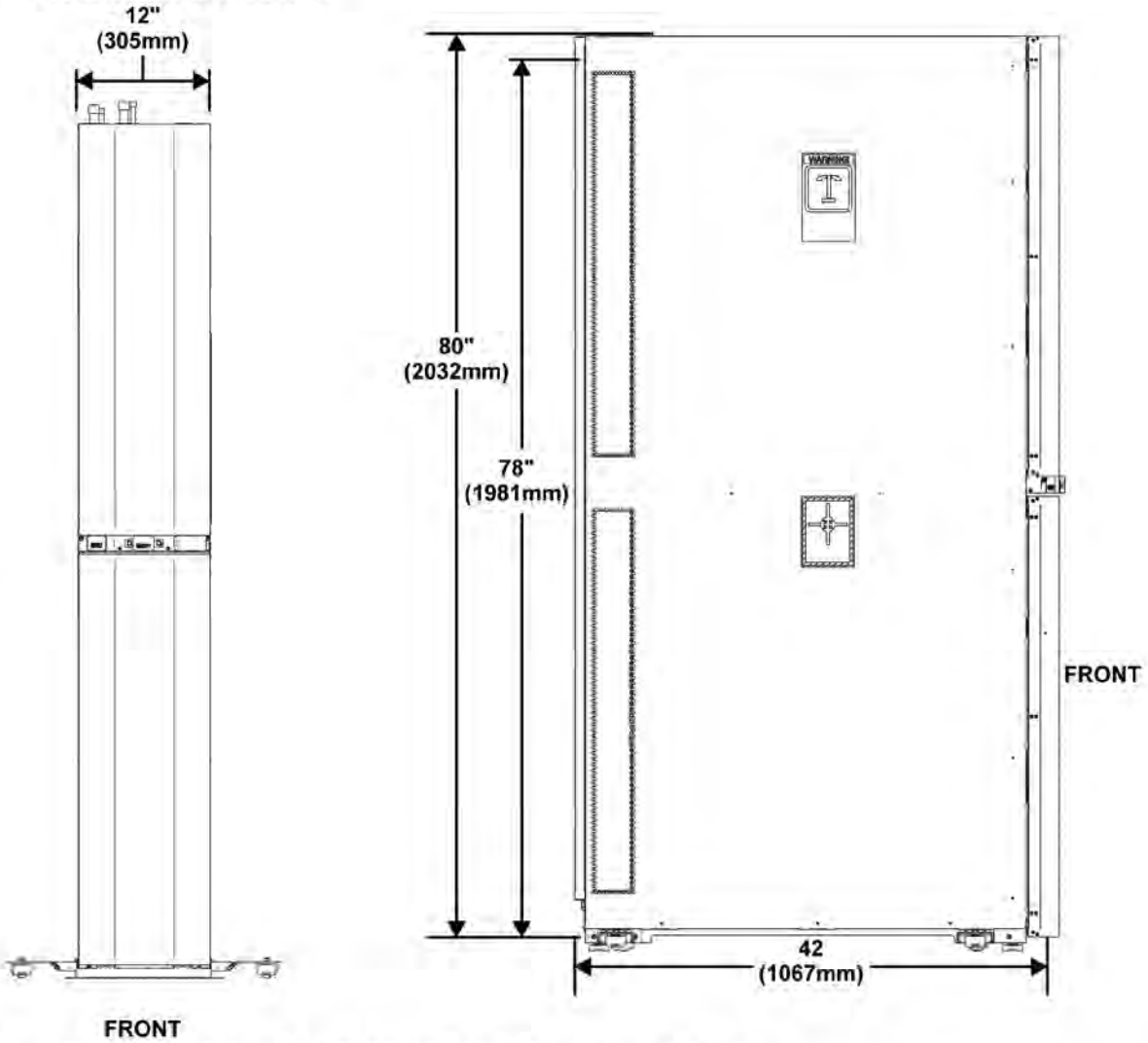

4.2 Installing the Liebert XDH Within the Enclosure Row

Built-in casters allow rolling the Liebert XDH into position for installation. Stabilizers reduce the likelihood of the unit tipping over. These stabilizers must be removed before the unit is positioned in the row. Adjustable leveling feet prevent it from moving after positioning.

Once positioned, the Liebert XDH must be secured either to the floor with the included shipping brackets or to an adjacent cabinet. An adjustable bracket (Liebert P/N 187642G1) for attaching the Liebert XDH to an adjacent cabinet is included with each unit.

This page is intentionally left blank.

Liebert® XDO™

The Liebert XDO draws in hot air through two opposite inlets and discharges cool air down into the cold aisle where the electronic equipment air inlets are located. This flexible, scalable and space saving product mounts to the ceiling — requiring zero floor space. The Liebert XDO is a part of our high heat-density cooling product family that utilizes pumped refrigerant technology. The pumped refrigerant operates at low pressure in the system and becomes a gas at room conditions, making it ideal for use around electronic equipment. Since the Liebert XDO always provides 100% sensible capacity, the need for humidification is significantly reduced, further reducing energy usage and maintenance.

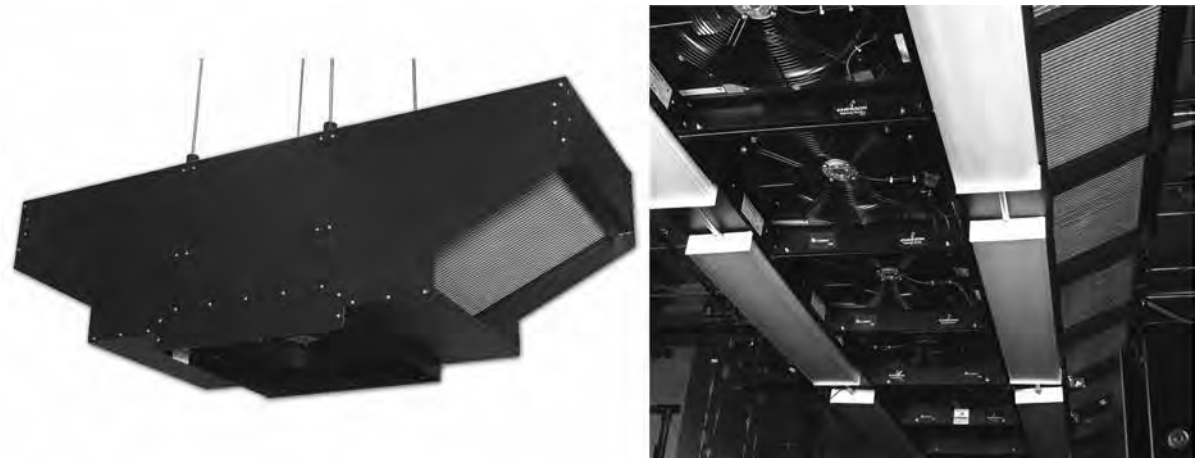

The ceiling mounted Liebert XDO overhead cooling module provides sensible spot and zone cooling for high heat density equipment.

Flexibility:

- Can cool more than 500 W/sq.ft. (5400 W/m2).
- No floor space required.
- Complements the cooling of Liebert precision cooling units.
- Excellent for spot and zone cooling.
- Scalable.
- Flexible installation with several connection possibilities.
- Optional pre-charged flexible piping with threaded quickconnect fittings allows adaptive and scalable expansion without interruption of cooling operations.
- Possible to be fully installed from an existing cold aisle without the need for reaching over existing racks.

Higher Availablity:

- Uses pumped refrigerant, which is ideal for use around electronic equipment.
- Complete packaged unit includes enclosure, coils, fan and piping.

Lowest Total Cost of Ownership:

- Superior cost for cooling per high heat density rack.
- Highly energy efficient.

Smart Module technology:

- Liebert XDO Smart Modules include integrated control boards that provide the following capabilities:
- Monitor fan status on the module with an on-unit, red/green LED
- Be alerted to the presence of condensation
- Remotely shutdown the module via dry contact closures

Technical Specifications Summary

	XDO16	XDO20
Nominal Capacity, 60 Hz[1]	17.2 kW / 5 Ton	20 kW / 5.7 Ton
Nominal Capacity, 50 Hz[1]	17.1 kW / 4.9 Ton	17.7 kW / 5 Ton
Nominal Airflow, 60Hz	2700 CFM (4590 m³/h)	
Nominal Airflow, 50Hz	2250 CFM (3820 m³/h)	
Input Voltage	120 V, 1 ph, 60 Hz 220-240 V, 1 ph, 50/60 Hz	
Full load amps	2.7A @ 120V, 1ph, 60 Hz 1.5A @ 230V, 1ph, 50 Hz	
Audible Noise, 60 Hz / 50 Hz	85 dBa / 83 dBa Sound Power	
Height, module only	22.5" (572 mm)	
Width	72.0" (1829 mm)	
Depth	24" (610 mm)	
Weight, empty	150 lbs (68 kg)	
Options	Smart Module Control Board (Includes Condensate Detection) Quick Connect Couplings (for Flexible Piping)	

[1]Nominal Capacity Rating is @ 55°F (13°C) Entering Fluid Temperature and 92°F (33°C) Entering Air Temperature.
Max capacity 60Hz: XDO16 - 17.2kW @ 90 F (32 C), XDO20 - 23kW @ 100 F (38 C)
Max capacity 50Hz: XDO16 - 17.2kW @ 93 F (34 C), XDO20 - 23kW @ 103 F (39 C)

Liebert XD Hydraulic System Schematic

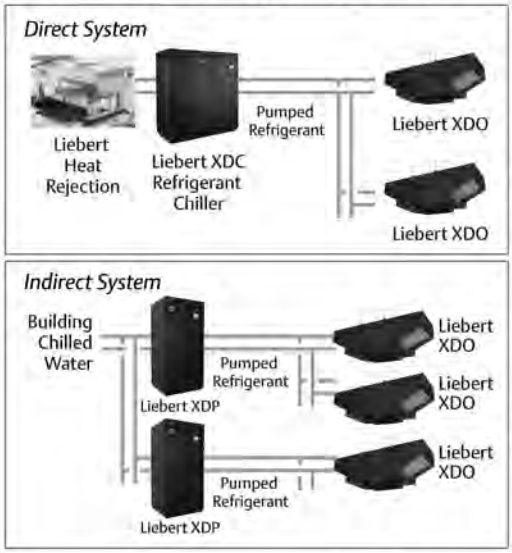

The indoor Liebert XDC refrigerant chiller is specifically designed to support Liebert XD cooling modules. The Liebert XDC connects directly to the XD modules.

When a building chilled water system is available, the Liebert XDP pumping unit is utilized as an interface between the pumped refrigerant circuit and the chilled water system.

Both the Liebert XDC and the XDP units circulate the refrigerant to Liebert XD units, while maintaining the refrigerant at a temperature always above the actual dewpoint.



The Liebert XDO systems work extremely well with the "hot aisle-cold aisle" approach.

Guide Specification for Liebert XDO

1.0 GENERAL

1.1 SUMMARY

These specifications describe requirements for an air conditioning system designed for cooling of high heat density equipment. The system shall be designed to maintain conditions within the space with heat emitting equipment. The manufacturer shall design and furnish all equipment to be fully compatible with heat dissipation requirements of the site.

1.2 DESIGN REQUIREMENTS

The air conditioning system shall be a Liebert XDO factory-assembled unit. The unit shall be designed for draw-through air arrangement to ensure even air distribution to the entire face area of the coils.

1.3 SUBMITTALS

Submittals shall be provided with the proposal and shall include: Dimensional, Electrical and Capacity data.

1.4 WARRANTY

The system shall be provided with a warranty against defects in material and workmanship.

1.5 QUALITY ASSURANCE

The specified system shall be factory-tested before shipment and designed to meet NRTL requirements. The system shall be designed and manufactured according to world-class quality standards. The manufacturer shall be ISO 9001 certified.

2.0 PRODUCT

2.1 STANDARD FEATURES

2.1.1 XDO Module

XDO module shall include two cooling coils and a fan housed in a cabinet.

- XDO16 (60Hz) - Nominal cooling capacity of 54,642 BTUH (16 kW) rated at 55°F (12.8°C) entering fluid temperature, 85°F (29.4°C) entering air temperature, 50°F (10°C) or lower dew point and 2,700 CFM (4,600 m3/h)
- XDO20 (60Hz) -Nominal cooling capacity of 20 kW (68,000 BTUH) rated at 55°F (12.8°C) entering fluid temperature, 92°F (36.6°C) entering air temperature, 50°F (10°C) or lower dew point and 2,700 CFM (4,600 m^3/h)
- XDO16 (50Hz) - Nominal cooling capacity of 47,800 BTUH (14 kW) rated at 55°F (12.8°C) entering fluid temperature, 85°F (29.4°C) entering air temperature, 50°F (10°C) or lower dew point and 2,250 CFM (3,800 m3 /h)
- XDO20 (50Hz) - Nominal cooling capacity of 17.7 kW (60,400 BTUH) rated at 55°F (12.8°C) entering fluid temperature, 92°F (36.6°C) entering air temperature, 50°F (10°C) or lower dew point and 2,700 CFM (4,600 m^3/h)

2.1.2 Cooling Coil

The cooling coils shall be constructed of aluminum. Fluid shall be supplied to the XDO from a Liebert XD Pumping Unit or a Liebert XD Coolant Chiller to prevent coil condensation and optimize the leaving fluid temperature.

2.1.3 Fan

Each module shall consist of one (1) all-metal fan with round venturi plate and finger guard.

2.1.4 Electrical

The fan shall be powered by plugging in a circular connector into a receptacle on the XDO module.

2.1.5 Sound

The sound power rating with the fan running at maximum speed shall not exceed 85 dB(A) per XDO module.

2.1.6 Piping

Factory-installed piping shall be leak-tested and pressure-tested prior to shipment from the factory.

2.1.7 Lighting Fixtures

The XDO module shall have provisions for mounting optional lighting fixtures.

2.1.8 Drip Pan

A pan shall be factory-installed below the header in the coils.

2.2 OPTIONAL FEATURES XDO

2.2.1 Smart Module

The XDO is available with an optional factory-installed control board and condensate detection for the drip pan. The module shall have connection points (dry contacts) in the electrical box for connection of outgoing alarm cables.

2.2.2 Pipe Connection

The XDO is available with optional factory-installed "one-shot" type pipe connections (for field connection of Flexible Piping).

2.3 ELECTRICAL REQUIREMENTS

Each XDO module shall require 2.7 FLA at 120V-1ph-60hz or 1.44 FLA at 230V-1ph-50Hz.

3.0 EXECUTION

3.1 INSTALLATION OF XDO

3.1.1 General

Install the unit in accordance with the manufacturer's installation instructions. Maintain recommended service clearances as outlined in the installation instructions.

3.1.2 Electrical Wiring

Furnish copy of the manufacturer's electrical connection diagram submittal to the electrical contractor.

3.1.3 Piping Connections

Install and connect devices furnished by the manufacturer but not specified to be factory-mounted. Furnish a copy of the manufacturer's piping connection diagram submittal to the piping contractor.

3.1.4 Supply and Return Piping

Connect supply and return connections to the XDO module.

3.2 FIELD QUALITY CONTROL

3.2.1 Startup

Start up the air conditioning unit in accordance with the manufacturer's startup instructions. Test controls and demonstrate compliance with requirements.

NOTE: These Guide Specifications comply with the outlines of the Construction Specifications Institute per CSI MP-2-1 and MP-2-2. In correspondence, reference Liebert document SL-16667_REV02_06-09.

Detailed Technical Specification

Table 3 Liebert XDO20 specifications

Models	XDO20DK--*; XDO20BKP-* XDO20DKP-*; XDO20BK-E* XDO20DK-E*; XDO20BKPE* XDO20DKPE*	XDO20BS--*; XDO20DS--* XDO20BSP-*; XDO20DSP-v XDO20BS-E*; XDO20DS-E* XDO20BSPE*; XDO20DSPE*	
	60Hz	60Hz	50Hz
Cooling Capacity	Nominal (92°F [33°C] EAT): 20kW / 5.7 Tons Maximum (100°F [38°C] EAT): 23kW / 6.5 Tons		Nominal (92°F [33°C] EAT): 17.7kW / 5 Tons Maximum (103°F [39°C] EAT): 23kW / 6.5 Tons
Conditions	Capacity rating is @ 55°F (13°C) Entering Fluid Temperature and 50°F (10°C) or lower dew point		
Electrical Requirements			
Input Voltage	1ph-60Hz-120V	1ph-60Hz-220-240V	1ph-50 Hz-220-240V
Input Power Connections	Terminal blocks provided internal to unit		
Full Load Amps	2.7A @ 120V	1.64A @ 230V	1.47 @ 230V
Wire Size Amps	3.4	2.0	1.84
Overcurrent Protection Device	15	15	15
Power consumption, nominal, watts	335	350	250
Dimensions, inches (mm)			
Length	72-1/4 (1835)		
Width	24-1/8 (613)		
Height	22-1/2 (572) not including electrical and piping access		
Weight, lb (kg)			
Unit only	150 (68)		
Shipping weight	238 (108)	296 (134)	
Installed, with refrigerant, without options	155 (70)		
Number of Fans	1		1
Airflow, Nominal, ft^3/ min (m^3/ hr)	2700 (4587)		2250 (3822)
Audible Noise	85 dBa sound power		83 dBa sound power
Pipe Connections (without flex pipe)			
Refrigerant Supply from Liebert XDP/Liebert XDC	1/2" OD, Copper		
Refrigerant Return to Liebert XDP/Liebert XDC	7/8" OD, Copper		
Serviceable Parts	Fan and electrical components		
Exterior Finish – Bottom, Sides, Front and Rear	Black matte finish, heat-fused powder coat		
Exterior Finish - Top	Hot-dipped galvanized steel		
Agency			
Approvals	CSA 60 Hz		CE 50Hz
Options			
Lighting Fixtures (ship loose)	2 Liebert XDOs per lighting unit; 120V or 277V; 4' standard fluorescent tubes (not included)		
Power, optional lighting fixture	0.9A per 120V light fixture; 0.4A per 277V light fixture		None
Condensate sensing (factory-installed)	Dry contact 24VAC - 1A maximum		
Pre-Charged Refrigerant	R-134a Refrigerant, one-shot connections		

* = Revision level

Table 4 Liebert XDO16 specifications

Models	XDO16BK--0 XDO16DK--0 XDO16BK-E0 XDO16DK-E0 XDO16BKP-0 XDO16BKPE0 XDO16DKP-0 XDO16DKPE0 (60Hz)	XDO16BSP-0 XDO16BSPE0 XDO16DSP-0 XDO16DSPE0 XDO16BS--0 XDO16DS--0 XDO16BS-E0 XDO16DS-E0 (60Hz)	XDO16BSP-0 XDO16BSPE0 XDO16DSP-0 XDO16DSPE0 XDO16BS--0 XDO16DS--0 XDO16BS-E0 XDO16DS-E0 (50Hz)
Cooling Capacity	Nominal (92°F [33°C] EAT): 17.2kW / 5 Tons Maximum (90°F [32°C] EAT): 17.2 kW / 5 Tons		Nominal (92°F [33°C] EAT): 17.1kW/4.9Tons Maximum (93°F [34°C] EAT): 17.2 kW / 5 Tons
Conditions	Capacity rating is @ 55°F (13°C) Entering Fluid Temperature and 50ºF or lower dew point		
Electrical Requirements			
Input Voltage	1ph-60Hz-120V	1ph-50 Hz-220-240V	1ph-50 Hz-230V
Input Power Connections	Terminal blocks provided internal to unit		
Full Load Amps	2.7A @ 120V	1.50 @ 230V	1.19 @ 230V
Wire Size Amps	3.4	2.0	1.28
Overcurrent Protection Device	15	15	15
Power consumption, nominal, watts	335	250	250
Dimensions, inches (mm)			
Length	72-1/4 (1835)		
Width	24-1/8 (613)		
Height	22-1/2 (572) not including electrical and piping access		
Weight, lb (kg)			
Unit only	150 (68)		
Shipping weight	238 (108)	296 (134)	
Installed, with refrigerant, without options	155 (70)		
Number of Fans	1	1	
Airflow, Nominal, ft^3/ min (m^3/ hr)	2700 (4587)	2250 (3822)	
Audible Noise	85 dBa sound power	83 dBa sound power	
Pipe Connections			
Refrigerant Supply from Liebert XDP/Liebert XDC	1/2" OD, Copper		
Refrigerant Return to Liebert XDP/Liebert XDC	7/8" OD, Copper		
Serviceable Parts	Fan and electrical components		
Exterior Finish – Bottom, Sides, Front and Rear	Black, matte finish, heat-fused powder coat		
Exterior Finish - Top	Hot-dipped galvanized steel		
Agency			
Approvals	CSA 60 Hz	CSA 60Hz	CE 50Hz

Table 5 Options for Liebert XDO20 and Liebert XDO16

Option	Liebert XDO - 60Hz Models	Liebert XDO - 50Hz Models
Lighting Fixtures (ship loose)	2 Liebert XDOs per lighting unit; 120V or 277V; 4' standard fluorescent tubes (not included)	
Power, optional lighting fixture	0.9A per 120V light fixture; 0.4A per 277V light fixture	None
Condensate sensing (factory-installed)	Dry contact 24VAC - 1A maximum	
Pre-Charged Refrigerant	R-134a Refrigerant, one-shot connections	

Table 6 Liebert XD Flex Pipe assemblies, supply and return

Description	Liebert P/N Straight Connection Assembly	Liebert P/N 90-Degree Connection Assembly	Length ft (m)	Minimum Bend Radius inches (mm)	
				Supply	Return
Liebert XD Flex Pipe Kit Liebert XDO	186566G1	186565G1	6 (1.8)	7 (178)	9 (229)
	186566G2	186565G2	10 (3.0)		
	186566G3	186565G3	8 (2.5)		
	186566G4	186565G4	4 (1.2)		

Submittal Drawings

Liebert XDO Dimensions

Figure 9 General arrangement and overall dimensions—hard-piped connections

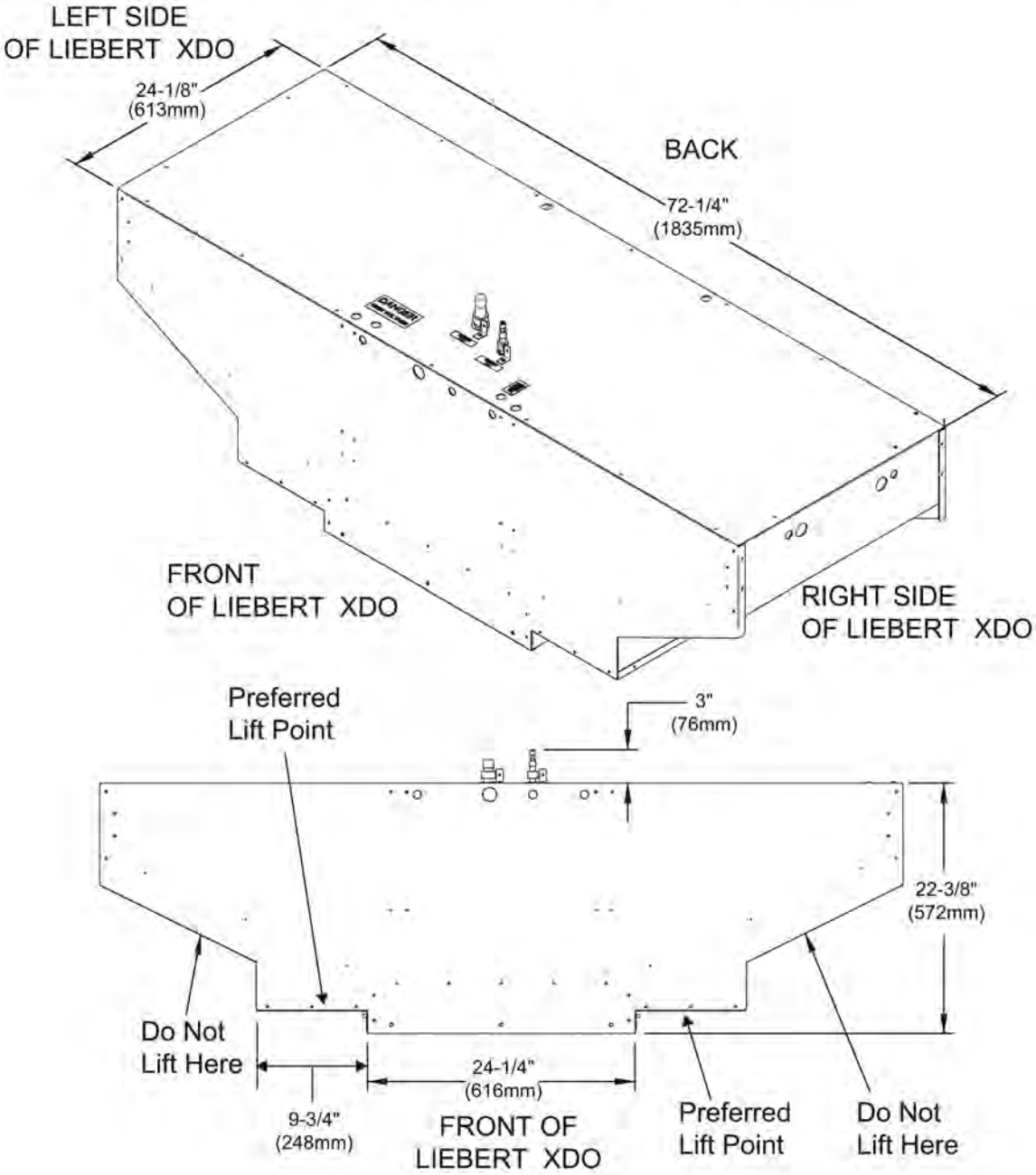

This page is intentionally left blank.

Liebert® XDR™

High Heat Density Cooling in a Space-Saving Design



Overhead piping connections are completely static – no moving components will interfere with opening or closing the door.

Liebert XDR Rack Door Cooling Module

Microchannel coils provide energy efficient, space-saving cooling

The Liebert XDR is a fanless heat exchanger module that installs as the rear door of an equipment rack, providing up to 20kW of room-neutral cooling. The Liebert XDR design uses the server fans within the protected rack to provide airflow through the unit. The microchannel coil heat exchanger cools the air and returns it to room at close to the same temperature as the air entering the rack.

The open design of the microchannel allows the Liebert XDR to mimic the airflow of a perforated door, a feature that literally can be seen.

The Liebert XDR is a part of the Liebert XD high heat-density cooling system that utilizes pumped refrigerant technology. The pumped refrigerant operates at low pressure in the system and becomes a gas at room conditions, making it ideal for use around electronic equipment. Since the Liebert XDR always provides 100% sensible capacity, the need for computer room air conditioners to provide humidification is significantly reduced, resulting in lower energy usage.

Flexibility:
- Replaces the existing back door on IT racks from Knurr and other major manufacturers
- Requires minimal floor space.
- Door allows for full access to the servers and equipment by opening greater than 100 degrees
- Supports both hot aisle/cold aisle configurations and irregular configurations.
- Allows adaptive and scalable expansion without interruption of cooling operations.
- Operates with the Liebert XD family as a part of a high density cooling solution.

Higher Availability:
- Uses pumped refrigerant, which is ideal for use around electronic equipment.
- Ensures continuous operation of critical IT systems under extreme heat conditions.

Lowest Total Cost Of Ownership:
- Operates with high energy efficiency – no fans or moving parts requiring electricity.
- Fanless cooling module requires no maintenance

Ideally Suited For:
- Rack heat loads up to 20kW
- Knurr and other equipment enclosure racks
- Existing XD systems supported by Liebert XDP and Liebert XDC
- Hot spots, regardless of space configuration

Technical Specifications Summary

Technical Data	
Nominal Capacity, 60 Hz	20.5 kW / 5.8 Ton
Nominal Capacity, 50 Hz	20.5 kW / 5.8 Ton
Physical *Height without piping connections	*Height : 78.4 (1992 mm) Width 23.5" (597 mm) Depth 5.9" (150 mm) Weight, empty 130 lbs (59 kg)
Piping	Hard-piping, Quick-connect couplings (Removable and "One-Shot") for Flexible Piping
Rack Compatibility	24" x 42U (600mm x 42U) rack enclosure
Maximum modules per loop	8 (eight)

Nominal Capacity Rating is @ 55°F (13°C) Entering Fluid Temperature and 104°F (40°C) Entering Air Temperature, 2400 CFM (68 m³/min)

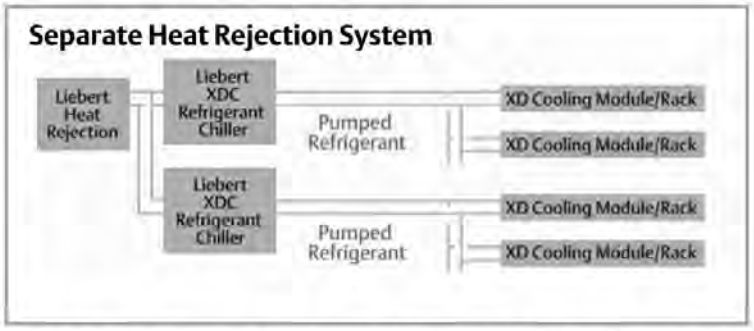

The indoor Liebert XDC Refrigerant Chiller is specifically designed to support Liebert XD cooling modules. Liebert connects directly to the modules through the pumped refrigerant circuit.

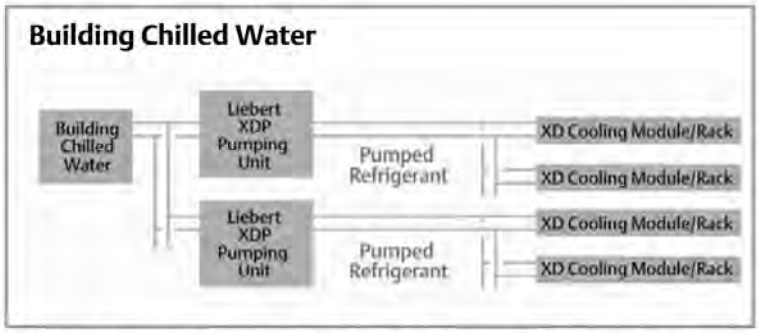

When a building chilled water circuit is available, the Liebert XDP Pumping Unit is utilized as an interface between the pumped refrigerant circuit and the chilled water system. Both Liebert XDC and Liebert XDP units circulate the refrigerant to the Liebert XD modules, while maintaining the refrigerant at a temperature always above the actual dewpoint.

Liebert® XDP™

The Liebert XDP Pumping Unit is part of the the highly energy-efficient, high heat density Liebert XD cooling system.

The system can cool more than 30 kW per rack and utilizes pumped refrigerant, which is ideal for use around electronic equipment. Liebert XDP is specifically designed to support the Liebert XDO, XDV, XDH and CoolFrame modules. The XDP is an interface between the pumped refrigerant circuit and the building chilled water system. The XDP circulates the refrigerant to the Liebert XDV modules while maintaining the refrigerant at a temperature always above the actual dewpoint. The packaged unit includes Enclosure, Pumps, Heat Exchanger, Receiver Tank, Controls, Valves and Piping.



Key Features

- Energy Efficient
- Redundant Pumps
- Floor Space Efficient
- Scalable
- Easy to Install

Techinical Specifications Summary

Technical Data

Nominal Capacity, 60 Hz	160 kW / 46 Ton
Nominal Capacity, 50 Hz,	140 kW / 40 Ton
Input Voltage	208 V, 3 ph, 60 Hz 460 V, 3 ph, 60 Hz 380/415 V, 3 ph, 50 Hz
Full load amps	2.1 A @ 460 V, 3 ph, 60 Hz
	2.3 A @ 380/420 V, 3 ph, 50 Hz
Height	78" (1981mm)
Width	38" (965mm)
Depth	34" (864mm)
Weight, empty	821 lbs (372 kg)

Liebert XD Hydraulic System Schematic

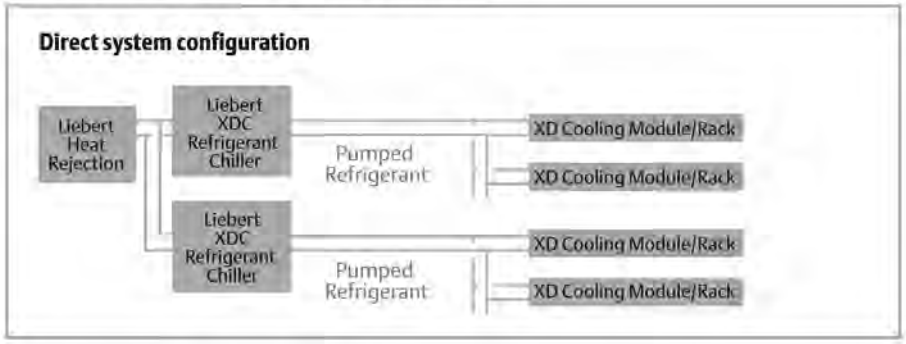

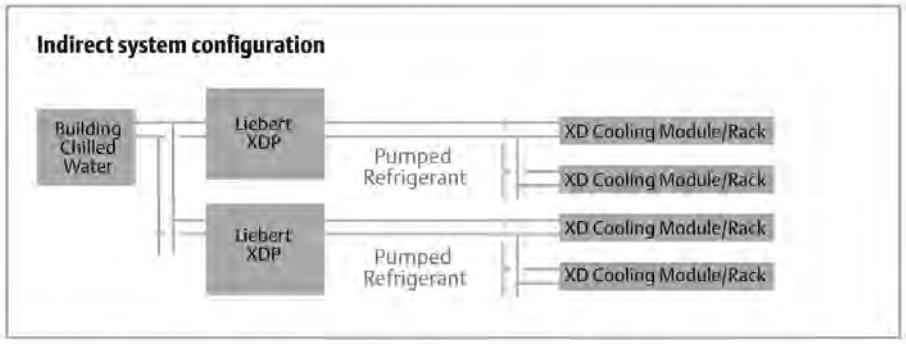

The indoor Liebert XDC Refrigerant Chiller is specifically designed to support the Liebert XD cooling modules. The XDC connects directly to the modules through the pumped refrigerant circuit.
When a building chilled water system is available, the Liebert XDP Pumping Unit is utilized as an interface between the pumped refrigerant circuit and the chilled water system. Both the XDC and the XDP units circulate the refrigerant to the XD modules, while maintaining the refrigerant at a temperature always above the actual dewpoint.

Guide Specification for Liebert XDP

1.0 GENERAL

1.1 Summary
These specifications describe requirements for an air conditioning system designed for cooling of high heat density equipment. The system shall be designed to maintain conditions within the space with heat emitting equipment. The manufacturer shall design and furnish all equipment to be fully compatible with heat dissipation requirements of the site.

1.2 Design Requirements
The fluid circulating system shall be a Liebert XD Pumping Unit (XDP) factory-assembled unit. The unit shall be designed for connection to cooling modules in the Liebert XD product family.

1.3 Submittals
Submittals shall be provided with the proposal and shall include: Dimensional, Electrical, and Capacity data; typical Piping and Electrical Connection drawings.

1.4 Warranty
The system shall be provided with a warranty against defects in material and workmanship.

1.5 Quality Assurance
The specified system shall be factory-tested before shipment and designed to meet NRTL requirements. The system shall be designed and manufactured according to world-class quality standards. The manufacturer shall be ISO 9001 certified.

2.0 PRODUCT

2.1 Standard Features XDP
The XDP shall include a heat exchanger, pumps, microprocessor control, modulating control valve, disconnect switch, and associated factory-installed piping.

2.1.1 Cabinet
The XDP components shall be enclosed in a cabinet with powder painted doors. Two (2) doors shall hinge from the front for service access.

2.1.2 Pumps
The pumps shall be factory-piped and factory-wired in the XDP module.

2.1.3 Heat Exchanger
The heat exchanger shall be brazed-plate type, constructed of 316 stainless-steel plates. The primary side shall be piped to a chilled water source with entering fluid temperature of 45°F (7.2°C), with a design flow rate of 140 gpm (32 m3/h). The secondary side shall be piped to cooling module(s) in the Liebert XD product family. A strainer shall be installed upstream of the XDP, on the primary (building) chilled water side.

2.1.4 Chilled Water Valve
A modulating two-way chilled water valve shall control the flow of chilled water on the primary side of the heat exchanger. The valve actuator shall respond to changes in room dew point temperature to control the supply temperature for optimum cooling with no condensation.

2.1.5 Microprocessor Control
The XDP shall include a factory-wired and factory-mounted microprocessor control.

Display
The display shall be a two-line, menu-driven LCD, and shall include factory-mounted temperature and humidity sensors. The LCD shall be field-mounted and wired to the microprocessor board in the XDP.

Setpoints
The dew point margin shall be field-programmable to set the minimum fluid temperature above the measured room dew point. Also, the user shall be able to program the min room temperature alarm, high chilled water temperature alarm, High Air Temperature and Low Air Temperature alarm.

Alarms
The display shall report the following alarm conditions:

- loss of flow P1
- loss of flow P2
- high fluid temperature
- low fluid temperature
- valve failure
- loss of power
- failed sensor(s)
- high room temperature
- low room temperature

A common alarm contact closure shall be activated upon detection of any alarm. The common alarm shall be programmable to disable on enable the alarms that report to the common alarm. Alarm time delays shall be programmable to provide additional filtering for the reporting of an alarm to the display and audible signal. The alarm history shall display the last 60 alarms recorded by the microprocessor.

Status
Display shall indicate the following status:

- valve open %
- fluid temperature (secondary side)
- pump1 (on/off)
- pump2 (on/off)

Setup Operation

Restart Time Delay
The user shall be able to program the restart time delay after a loss of power.

Celsius or Fahrenheit Display
The user shall be able program the display to read in Fahrenheit or Celsius.

Passwords
A setpoint password shall be required for the user to change control and alarm setpoints. Also, a setup password shall be required for the user to change the setup configuration.

Calibrate Sensors
The user shall be able to calibrate the air temperature and humidity sensors to a known source.

Diagnostics
The user shall be able to monitor the control inputs, test the control outputs, and test the XDP control board from the remote display.

3.0 EXECUTION

3.1 Installation Of XDP

3.1.1 General
Install unit in accordance with manufacturer's installation instructions. Maintain recommended service clearances as outlined in installation instructions.

3.1.2 Electrical Wiring
Furnish copy of manufacturer's electrical connection diagram submittal to the electrical contractor.

3.1.3 Piping Connections
Install and connect devices furnished by the manufacturer but not specified to be factory mounted. Furnish a copy of manufacturer's piping connection diagram submittal to the piping contractor.

3.1.4 Piping
Connect supply and return connections from the XDP to the XD cooling modules.

3.2 Field Quality Control

3.2.1 Startup
Start up air conditioning unit in accordance with manufacturer's startup instructions. Test controls and demonstrate compliance with requirements.

Detailed Technical Specification

Table 17 Liebert XDP160 specifications

Models	XDP160RC--1	XDP160RA--1	XDP160RM--1
Cooling Capacity, Nominal	160kW / 46 Tons, 60Hz		140kW / 40 Tons, 50Hz
	Each capacity is based on 45°F (7°C) entering water temperature and 140gpm (530lpm) water flow rate. Capacity is reduced when glycol mixtures are used in place of 100% water.		
Minimum Load	The Liebert XDP's minimum recommended operating load is 20% of system nominal capacity. For example, a Liebert XDP160 60Hz system's minimum load would be 32 kW. Loading below this value can unfavorably affect system operation. Consult factory for any loading below this recommendation.		
Electrical Requirements			
Input	208V/3ph/60Hz	460V/3/ph60Hz	380/415V/3ph/50Hz
Full Load Amps	4A	2.1A	2.3A
Dimensions, inches (mm)			
Height – Unit only	78 (1981)		
Height – As shipped	83 (2108)		
Width	38 (965)		
Depth	34 (864)		
Weight, lb (kg)			
Unit only	821 (372)		
Shipping weight	Domestic: 990 (449); Export: 1067 (484)		
Installed, with refrigerant and chilled water	1038 (471)		
Pipe Connections			
Refrigerant supply to Liebert XD cooling module	1-1/8" OD, Cu		
Refrigerant return from Liebert XD cooling module	2-1/8" OD, Cu		
Chilled water supply and return	2-5/8" OD, Cu		
Control Valve	2-way, 2" nominal; 35 PSIG close off pressure rating; 150 PSIG maximum allowable pressure		
Pressure Drop – Chilled Water Side	20 psig (137kPa, 1.38bar), with 140 gpm (530lpm) water flow rate, control valve fully open		
Temperature Rise – Chilled Water Side at rated flow, °F (°C)	8.0 (4.4)		6.9 (3.8)
Number of Liebert XD cooling units connected, maximum (minimum)			
Liebert XDCF10	16 (4)		
Liebert XDH20	8 (2)		
Liebert XDH32	5 (1)		
Liebert XDV8	20 (4)		
Liebert XDV10	16 (4)		
Liebert XDO16	10 (2)		
Liebert XDO20	8 (2)		
Cabinet Exterior Finish	Black, matte finish, heat-fused powder coat		
Operating Ambient Temperature, Maximum, °F (°C)	86 (30)		
Agency			
Approvals	CSA 60Hz		CE 50Hz

Submittal Drawings

Units Dimensional Data
Liebert XDP

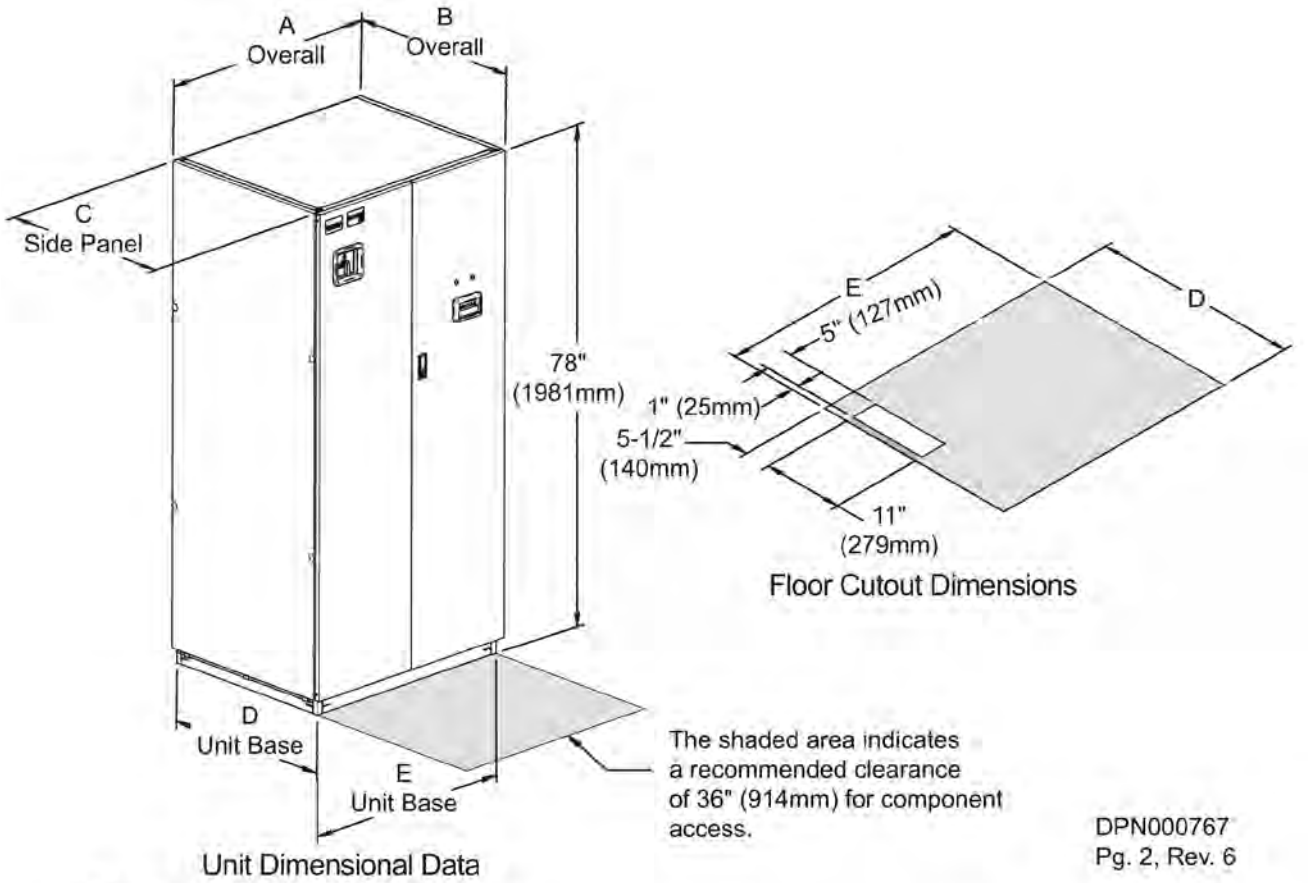

DPN000767
Pg. 2, Rev. 6

Table 1 Liebert XDP dimensions

Model 50/60Hz	Dimensional Data inches (mm)					Shipping Weight, lb (kg)	
	A	B*	C	D	E	Domestic	Export
XDP160	38 (965)	34 (864)	33-1/8 (841)	33 (838)	36 (914)	990 (449)	1067 (484)

* The dimension does not include the bezel of the disconnect switch.

This page is intentionally left blank.

Liebert® XDC™

The Liebert XDC Refrigerant Chiller is a part of Liebert's highly energy-efficient high heat density cooling system Liebert XD™.

The system can cool more than 30kW per rack and uses pumped refrigerant, which is ideal for use around electronic equipment. Liebert XDC is specifically designed to support the Liebert XDO, XDV, XDR and CoolFrame modules. The XDC is an indoor unit that connects directly to the XD cooling modules and it provides refrigerant circulation and control while maintaining the refrigerant at a temperature always above the actual dewpoint.

The packaged unit includes Enclosure, Pumps, Heat Exchanger, Scroll Compressors, Receiver Tank, Controls, Valves and Piping. The XDC is available in an air cooled configuration with remote condenser.



Key Features

- Energy Efficient
- Floor Space Efficient
- Scalable
- Easy to Install

Technical Specifications Summary

Nominal Capacity, 60 Hz	160 kW / 46 Ton
Nominal Capacity, 50 Hz	130 kW / 37 Ton
Input Voltage	460 V, 3 ph, 60 Hz 380/415 V, 3 ph, 50 Hz
Full load amps	79 A
Height	78" (1981 mm)
Width	74" (1879 mm)
Depth	34 5/8" (879mm)
Weight, empty	1800 lbs (817 kg)

Liebert XD Hydraulic System Schematic

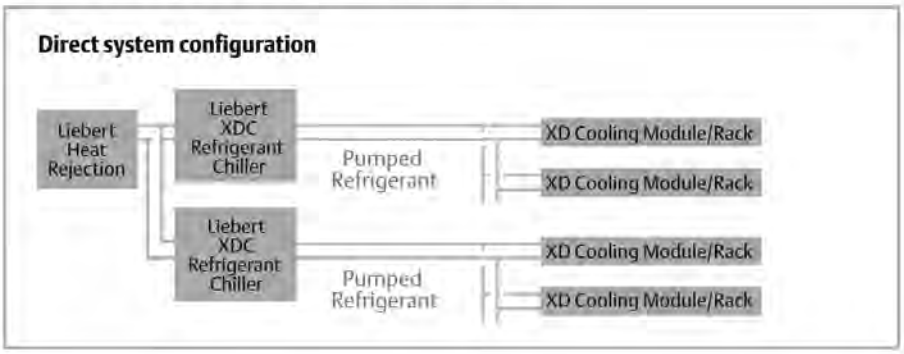

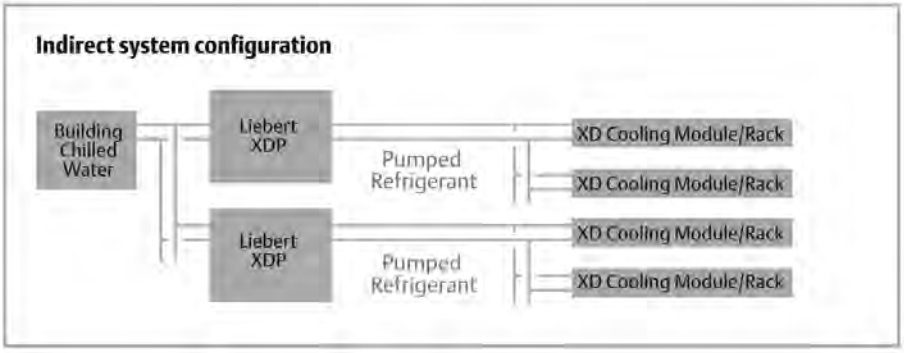

The indoor Liebert Refrigerant Chiller is specifically designed to support the Liebert XD cooling modules. The XDC connects directly to the modules through the pumped refrigerant. When a building chilled water system is available, the Liebert XDP Pumping Unit is utilized as an interface between the pumped refrigerant circuit and the chilled water system. Both the XDC and the XDP units circulate the refrigerant to the XD modules, while maintaining the refrigerant at a temperature always above the actual dewpoint.

Guide Specification for Liebert XDC

1.0 GENERAL

1.1 Summary
These specifications describe requirements for an air conditioning system designed for cooling of high heat density equipment. The system shall be designed to maintain conditions within the space with heat emitting equipment. The manufacturer shall design and furnish all equipment to be fully compatible with heat dissipation requirements of the site.

1.2 Design Requirements
The coolant supply unit shall be a Liebert XDC coolant chiller, factory assembled unit. The unit shall be designed for connection to cooling modules in the Liebert XD product family.

1.3 Submittals
Submittals shall be provided with the proposal and shall include: Dimensional, Electrical, and Capacity data and typical Piping drawings.

1.4 Warranty
The system shall be provided with a warranty against defects in material and workmanship.

1.5 Quality Assurance
The specified system shall be factory-tested before shipment and designed to meet NRTL requirements. The system shall be designed and manufactured according to world-class quality standards. The manufacturer shall be ISO 9001 certified.

2.0 PRODUCT

2.1 Standard Features XDC
The XDC shall include scroll compressors, receiver tank with sight glasses, brazed plate heat exchanger, pumps, microprocessor control, disconnect switch, and associated factory-installed piping.

2.1.1 Cabinet
The XDC components shall be enclosed in a cabinet with powder painted panels and doors. doors. Doors shall hinge from the front for service access. The frame shall be painted and constructed of 14 gauge welded tubular steel

2.1.2 Pumps
The pump shall be factory-piped and factory-wired in the XDC module.

2.1.3 Heat Exchanger
The heat exchanger shall be brazed-plate type, constructed of 316 stainless-steel plates. The primary side shall be piped to the refrigerant circuit. The secondary side shall be piped to cooling module(s) in the Liebert XD product family.

2.1.4 Compressor
The compressor shall be of scroll type with a suction gas cooled motor, vibration isolators, thermal overloads, manual reset high-pressure switch and pump down low pressure switch.

2.1.5 Microprocessor Control
The XDC shall include a factory-wired and factory-mounted microprocessor control.

Display
The display shall be a two-line, menu-driven LCD, and shall include factory-mounted temperature and humidity sensors. The LCD shall be field-mounted and wired to the microprocessor board in the XDC.

Setpoints
The dew point margin shall be field-programmable to set the minimum fluid temperature above the measured room dew point. Also, the user shall be able to program the high fluid temperature alarm, high air temperature alarm and low air temperature alarm.

Alarms
The display shall report the following alarm conditions:

- high fluid temperature
- low fluid temperature
- loss of power
- failed sensor(s)
- high room temperature
- low room temperature

A common alarm contact closure shall be activated upon detection of any alarm. The common alarm shall be programmable to disable on enable the alarms that report to the common alarm. Alarm time delays shall be programmable to provide additional filtering for the reporting of an alarm to the display and audible signal. The alarm history shall display the last 100 alarms recorded by the microprocessor.

Status
Display shall also indicate status for the main components in the unit.

Setup Operation

Restart Time Delay
The user shall be able to program the restart time delay after a loss of power.

Celsius or Fahrenheit Display
The user shall be able program the display to read in Fahrenheit or Celsius.

Passwords
A setpoint password shall be required for the user to change control and alarm setpoints. Also, a setup password shall be required for the user to change the setup configuration.

Calibrate Sensors
The user shall be able to calibrate the air temperature and humidity sensors to a known source.

Diagnostics
The user shall be able to monitor the control inputs, test the control outputs, and test the XDC control board from the remote display.

3.0 EXECUTION

3.1 Installation Of XDC

3.1.1 General
Install unit in accordance with manufacturers installation instructions. Maintain recommended service clearances as outlined in installation instructions.

3.1.2 Electrical Wiring
Furnish copy of manufacturers electrical connection diagram submittal to the electrical contractor.

3.1.3 Piping Connections
Install and connect devices furnished by the manufacturer but not specified to be factory mounted. Furnish a copy of manufacturers piping connection diagram submittal to the piping contractor.

3.1.4 Piping
Connect supply and return connections from the XDC to the XD cooling modules and from the XDC to the condenser.

3.2 Field Quality Control

3.2.1 Startup
Start up air conditioning unit in accordance with manufacturers startup instructions. Test controls and demonstrate compliance with requirements.

Detailed Technical Specification

Models	XDC160AA	XDC160AM
Cooling Capacity, Nominal	46 tons / 160kW with 125°F (51.6°C) condensing temperature and 50°F (10°C) evaporating temperature	37 tons / 130kW with 125°F (51.6°C) condensing temperature and 50°F (10°C) evaporating temperature
Electrical Requirements		
Input	460V-3ph-60Hz	380/415V-3ph-50Hz
Full Load Amps	79A	
Minimum supply wire sizing ampacity	84A	
Maximum fuse or circuit breaker size	100A	
Dimensions, inches (mm)		
Height – Unit only	78 (1981)	
Height – As shipped	83 (2108)	
Width	74 (1879)	
Depth	34-5/8 (879)	
Weight, lb (kg)		
Unit only	1800 (817))	
Shipping weight	Domestic: 1945 (882); Export: 2093 (949)	
Installed, with R-134a/R-407c	2000 (907)	
Pipe Connections		
XD Coolant supply to XD cooling module	1-1/8" OD, Cu	
XD Coolant return from XD cooling module	2-1/8" OD, Cu	
Liquid Line (DX circuit)	7/8" OD, Cu	
Hot Gas Line (DX circuit)	1-3/8" OD, Cu	
Number of XD cooling units connected, maximum (minimum)		
XD CoolFrame10	16 (6)	
XDH20	8 (4)	
XDH32	5 (2)	
XDO16	10 (4)	
XDO20	8 (4)	
XDV8	20 (8)	
XDV10	16 (7)	
Cabinet Exterior Finish	Black, matte finish, heat-fused powder coat	
Operating Ambient Temperature, Maximum, °F (°C)	86 (30)	
Agency		
Approvals	CSA 60Hz	CE 50Hz

Submittal Drawings

Dimensional Data
Liebert XDC

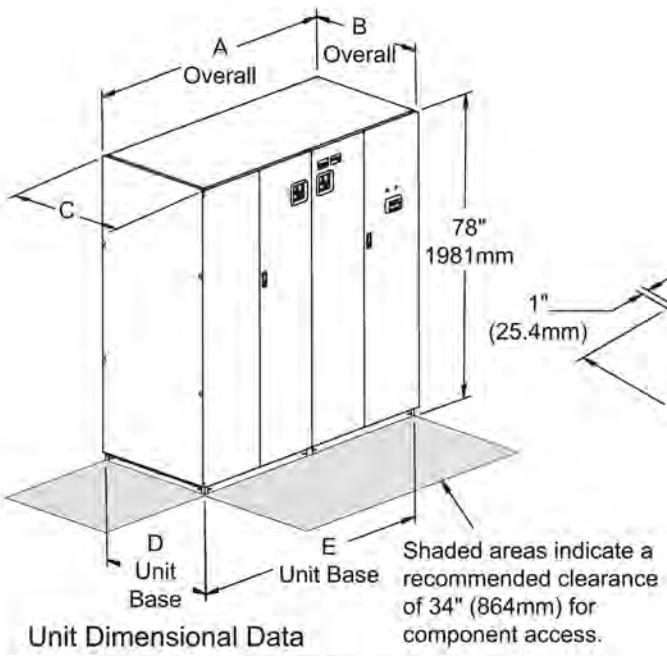

Unit Dimensional Data

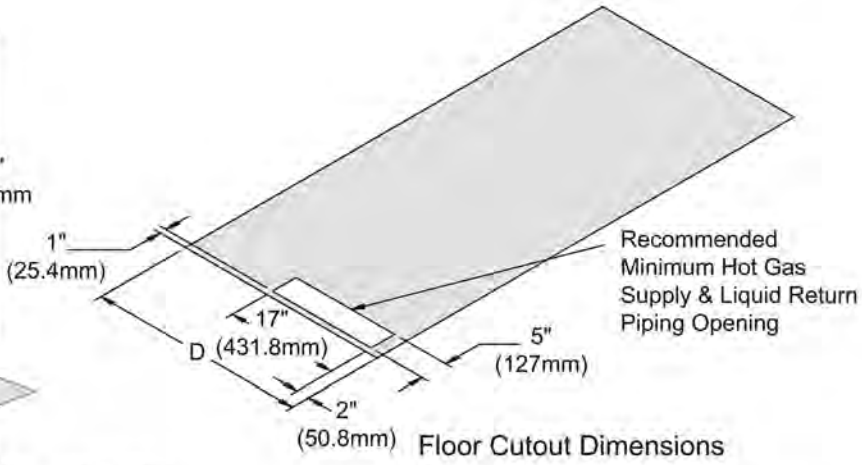

Floor Cutout Dimensions

DPN000768
Page 2, Rev. 4

Table 1 XD Chiller dimensions, weight

Air Cooled Model	Dimensional Data, inches (mm)					Shipping Weight, lb (kg)	
50/60Hz	A	B	C	D	E	Domestic	Export
XDC160	74 (1880)	34-5/8 (879)	34 (863)	33 (838)	72 (1829)	1945 (882)	2093 (949)

This page is intentionally left blank.

Liebert® HPS™

High Performance Split Air Conditioner

■ **06-14 kW**



Efficiency, Compactness, Flexibility!

HPS is the newest high performance split air conditioner designed to assure proper environmental conditions inside technological environments, especially BTS and Node B for Mobile Networks.

It's efficient thanks to the effective air distribution reached through the displacement cooling concept; it's energy and space saving thanks to the high efficiency components and the compactness of the innovative freecooling version; it's extremely flexible thanks to the possibility of selecting among several versions: HPS can be configured depending on the main application drivers (noise level, environmental conditions range etc.) and the desired options (freecooling, emergency freecooling, heating etc.).

Distribute the air in the best way

HPS delivers the cold air straight down, close to the racks suction area and intakes the hot air out coming fromthe heat sources, into the cabinet sides (frontal and lateral). In this way the mixing effect between conditioner cold air and electronic equipment hot air is denied resulting in a double beneficial effect: the rack is fed by cold air where it is needed and the air conditioner treats only the hot air maximizing its efficiency. Proper temperature inside the racks, high efficiency of the cooling equipment, hot spot absence in the site: distributing the air in a smart way is very effective.

Save energy and space

The use of the optional freecooling gives the possibility to stop the compressor and use the external fresh air to cool the site: the annual energy absorption, requested to cool the site, goes sensibly down. The 0-100% finemodulation allows to keep constantly the desired set point inside the site.No addingmodule is requested: the innovative rotary freecooling systemkeeps unchanged the requested space to install the unit.

Maximize site reliability

Remote nodes need to exchange data continuously, always working at proper environmental conditions. Therefore the air conditioner reliability is not an option: it's a must. Themostmodern design and components such as scroll compressor and plugtype fans, heat exchanger surfaces and airflows generously designed allow the unit to work 24h/day, 365 days.Maximize the unit reliability selecting the emergency cooling option: in case of main supply fault the air conditioner is supplied by alternative energy sources like 48 VDC batteries or independent AC generator.

Choose the cooling unit suitable to your application

HPS assures optimal air distribution, efficiency, energy saving, reliability, compactness whatever its configuration. More stringent requirements in terms of noise level emission and maximum external working temperature, can be satisfied selecting HPS advanced version: 45 dB(A) at 3mf.f and 50° Cwith internal air intake conditions of 30° C, 35% R.H.

Technical Specifications Summary

Main power supply		230/1N/50	400/3N/50	400/3N/50	400/3N/50	400/3N/50
Emergency power supply (opt)		48V DC or 230/1N/50				
Performances						
Total cooling capacity(1)	kW	6,4	8,1	10,1	12,5	14,6
Sensible cooling capacity(1)	kW	6,4	8,1	10,1	12,5	14,6
Compressor power input(1)	kW	1,7	2,2	3,0	3,7	4,6
Condenser fan power input (1)	kW	0,24	0,24	0,12	0,15	0,15
Evaporator fan power input (1)	kW	0,18	0,35	0,35	0,33	0,33
Evaporator airflow	m^3/h	1.510	2.360	2.360	2.770	2.750
Condenser max.airflow	m^3/h	2.970	2.970	6.300	5.675	5.675
Outdoor sound pressure level(2)	dB(A)	48,5	48,5	52	54	56
Indoor sound pressure level(2)	dB(A)	58	62,5	62,5	63	63
Max.ambient temperature(3)	°C	52	50	50	50	50
Refrigeration circuit						
Compressor type/quantity		scroll / 1				
Refrigerant		R407C				
Expansion device		thermostatic valve				
Evaporator fan						
Quantity/type/poles version		1/Axial/4				
Driven/motor protection		direct / IP44		direct / IP54		
Condenser fan						
Quantity/type/poles		1 / axial / 6		2 / axial / 6		
Driven/motor protection		direct / IP54				
Control system		variable speed				
Air filtery						
Filter type / efficiency		pleated / G3				
Heating						
Electric heating (opt)	kW	1,5		4,5		
Cabinet						
Frame		galvanized steel				
Painting		polyester – RAL 7035				
Insulation type/thikness	- / mm	polyurethane class A1 /10				
Evaporator Width	mm	800		900		
Evaporator Depth	mm	800		900		
Evaporator Height	mm	310		375		
Evaporator Weight	kg	50	53	53	58	58
Condenser Width	mm	920		920		
Condenser Depth	mm	390		390		
Condenser Height	mm	840		1190		
Condenser Weight	kg	80	82	97	103	111

(1) Ref. conditions: 30°C, 35% R.H indoor air intake, 35°C outdoor.

(2) Measured with outdoor temperature 35°C, 2 meters from the unit, free field conditions (factory set).

(3) Referred to 30°C indoor air intake.

Data referred to HPS standard version (no options)

Liebert® HPF

Self-Contained Air Conditioner for Indoor Installations

■ **7 to 18 kW**

Liebert® HPF represents the most complete indoor self-contained cooling system specifically designed to control the environmental conditions of technological or industrial rooms as well as of Telecom network sites

- Freecooling System Minimizing Operating Costs
- 48 V DC Power Supply for High Availability
- Smart Control Guaranteeing Efficient Unit Regulation
- Evaporator Fan with Optional EC Fan for Higher Energy Efficiency
- Compressor with Cooling Capacity Modulation
- Remote Monitoring Option For Real-Time Infrastructure Optimization
- Three Airflow Distributions Available Providing Cold Air Where Needed
- Backed by the Industry's Best Service and Support

Compact & Easy to Install Solution with R410A Refrigerant Included



Liebert® HPF from 7 to 18 kW

Freecooling System Minimizing Operating Costs

- Our solution provides enhanced energy savings with direct freecooling through the use of outside cold air as a main source of cooling

48 V DC Power Supply for High Availability

- 48 V DC power supply guaranteeing emergency cooling and specifically addressing the needs of Telecom enclosures

Smart Control Guaranteeing Efficient Unit Regulation

- Team-working with up to 16 units exploits the benefits of standby, rotation and cascade modes
- Optional graphic display stores the last 200 events, thus enhancing data collection functions

Evaporator Fan with Optional EC Fan for Higher Energy Efficiency

- High External Static Pressure (ESP) for superior adaption to different layouts and site applications
- The new generation of EC fans installed in the Liebert HPF dramatically increases overall unit efficiency

Compressor with Cooling Capacity Modulation

- Precisely matches heat load and saves energy
- Compressor's modulating capacity and the electronic expansion valve allow continuous cooling availability thus ensuring precise control of room temperature

Remote Monitoring Option For Real-Time Infrastructure Optimization

- Hirolink-i Communication Interface option provides Liebert HPF with Infrastructure Management enablement (Trellis™, Liebert® SiteScan, Liebert® Nform, LIFE™) as well as third-party customer protocols compatibility; such as MODBUS, SNMP, BACNET. The interface employs Ethernet, RS-485 and MSTP networks to monitor and manage a wide range of operating parameters, alarms and notifications.

Three Airflow Distributions Available Providing Cold Air Where Needed

Liebert HPF is an extremely flexible unit available in different airflow versions making it an ideal system for the most diverse site layouts:

Downflow: Return air enters the unit from the top, while supply air is discharged from below, exiting beneath the floor.

Upflow: Return air enters the unit from the bottom front, while supply air is discharged from the top front.

Displacement: Return air enters the unit from the top, while supply air is discharged from the bottom front.



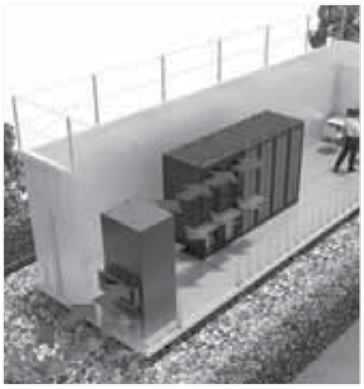

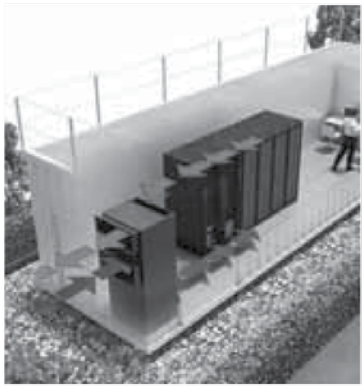

Backed by the Industry's Best Service and Support

- Fast and easy installation
- All components easily accessible from the front for simplified maintenance and service
- Service delivered by factory trained technicians
- 24/7 technical support

Technical Data	HPF0HO	HPF1AO	HPF1FO	HPF1DO*
Cooling Capacity [kW]	7.6	12.9	17.4	16.9
Airflow Version	Upflow	Upflow	Upflow	Upflow
Airflow [m³/h]	1955	3835	3680	2910
Refrigerant	R410A	R410A	R410A	R410A
Power Supply	400 V/ 3 ph/ 50 Hz	400 V/ 3 ph/ 50 Hz	400 V/ 3 ph/ 50 Hz	400 V/ 3 ph/ 50 Hz
Dimensions				
LxHxD [mm]	650x1990x650	900x2050x750	900x2050x750	900x2050x750

Technical Data	HPF0HU	HPF1AU	HPF1FU	HPF1DU*
Cooling Capacity [kW]	7.6	12.6	17.1	16.9
Airflow Version	Downflow	Downflow	Downflow	Downflow
Airflow [m³/h]	2095	3370	3680	3680
Refrigerant	R410A	R410A	R410A	R410A
Power Supply	400 V/ 3 ph/ 50 Hz	400 V/ 3 ph/ 50 Hz	400 V/ 3 ph/ 50 Hz	400 V/ 3 ph/ 50 Hz
Dimensions				
LxHxD [mm]	650x1990x650	900x2050x750	900x2050x750	900x2050x750

Technical Data	HPF0HD	HPF1AD	HPF1FD	HPF1DD*
Cooling Capacity [kW]	7.7	13.0	17.2	17.0
Airflow Version	Displacement	Displacement	Displacement	Displacement
Airflow [m³/h]	2289	3614	3805	3803
Refrigerant	R410A	R410A	R410A	R410A
Power Supply	400 V/ 3 ph/ 50 Hz	400 V/ 3 ph/ 50 Hz	400 V/ 3ph/ 50 Hz	400 V/ 3 ph/ 50 Hz
Dimensions				
LxHxD [mm]	650x1990x650	900x2300x750	900x2300x750	900x2300x750

(*) = Version with modulating capacity compressors
Note: Values refer to direct expansion working conditions; 35°C outdoor temperature; nominal power supply and indoor conditions of 30 °C / 39.5 % R.H. at the evaporating suction side.

Liebert® HPW

The High Performance Wallmount Cooling Solutions for Telecom Mobile Remote Access Nodes

Product overview

The Liebert HPW is the ultimate cooling system ideal for Mobile Telecom Network remote access nodes in shelters and containers.

The Liebert HPW units are packaged, outdoor, wall-mounted with the traditional upflow or the innovative downflow air delivery solutions.

- Direct Expansion thought to havethe highest efficiency in a wide range of external environmental conditions, thanks to the generous heat exchanger surface design.
- Free cooling with the highest energy saving combining the advanced circular damper system with the downflow air distribution concept.
- Emergency free cooling with the most efficient 48V DC plug type fan to redu- ce the impact on the site power con- sumption.







Reliability

Site shutdown prevention, extreme environmental conditions protection, remote site conditions control.

- **Protection all over the world**
  Remote nodes need to be kept at the right con- dition whatever the external temperature is. Situations in which external temperature is over 50°C as well as cases where it goes lower than - 30°C have the most stringent cooling requirements. The only reliable way to reach this target is to use the most recent refrigeration compo- nents like scroll compressors and modulating fans, together with generously designed heat exchangers.

- **Cooling also in emergency situations**
  The Network availability must be guaranteed, most of all, in emergency situations.Even if the main power supply fails due to natu- ral or accidental causes, Liebert HPW controls the temperature inside the site thanks to the possibility of ventilating or using the free cooling system: fans, damper and control are powered through back-up power coming from DC batteries or AC power generators.

- **Site conditions always under control**
  The possibility to remotely monitor and control the site conditions facilitates immediate reac- tion to any situation by allowing the operator to interact with the unit, just like being on site in front of the control panel.

The standard on-board controls allow interac- tion with one or more units, optimizing the ope- ration and enabling the connectivity to superior systems or third-party BMS (Dial up, SNMP, Modbus, IP communication).

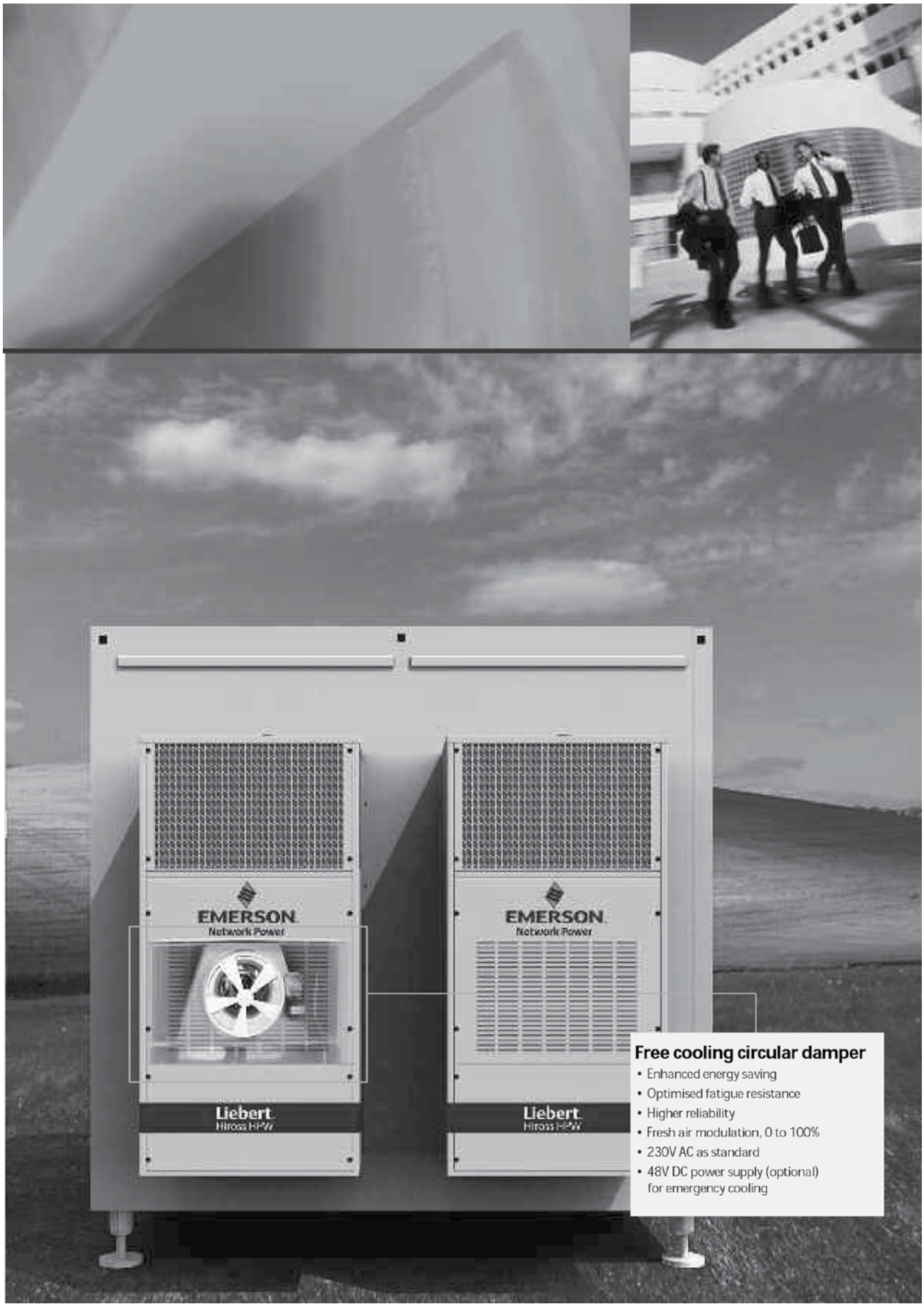

Free cooling circular damper

- Enhanced energy saving
- Optimised fatigue resistance
- Higher reliability
- Fresh air modulation, 0 to 100%
- 230V AC as standard
- 48V DC power supply (optional) for emergency cooling



Flexibility

Adaptive to all site layouts, suitable for critical environments, respecting the surroundings

- **Standardization of site preparation**
  Liebert HPW is available in two versions with different airflow patterns: HPW O (Upflow) and HPW D (Downflow).

  For both versions the dimensions and wall cut-outs are the same.

- **Solving unfavourable installation situations**
  Whatever configuration is used, the condensing section has been fitted in the cabinet upper part. This simple design feature reduces installation restrictions due to environmental limitations: dusty environments, green areas; and the proximity of adjacent buildings is less likely to effect the condenser efficiency.

- **Providing the desired quietness**
  The use of intelligent fan speed regulation and the possibility to utilise the most appropriate cabinet within the different sizes available for the required cooling capacity permits enhanced noise reduction, allowing site operation in resi- dential areas.



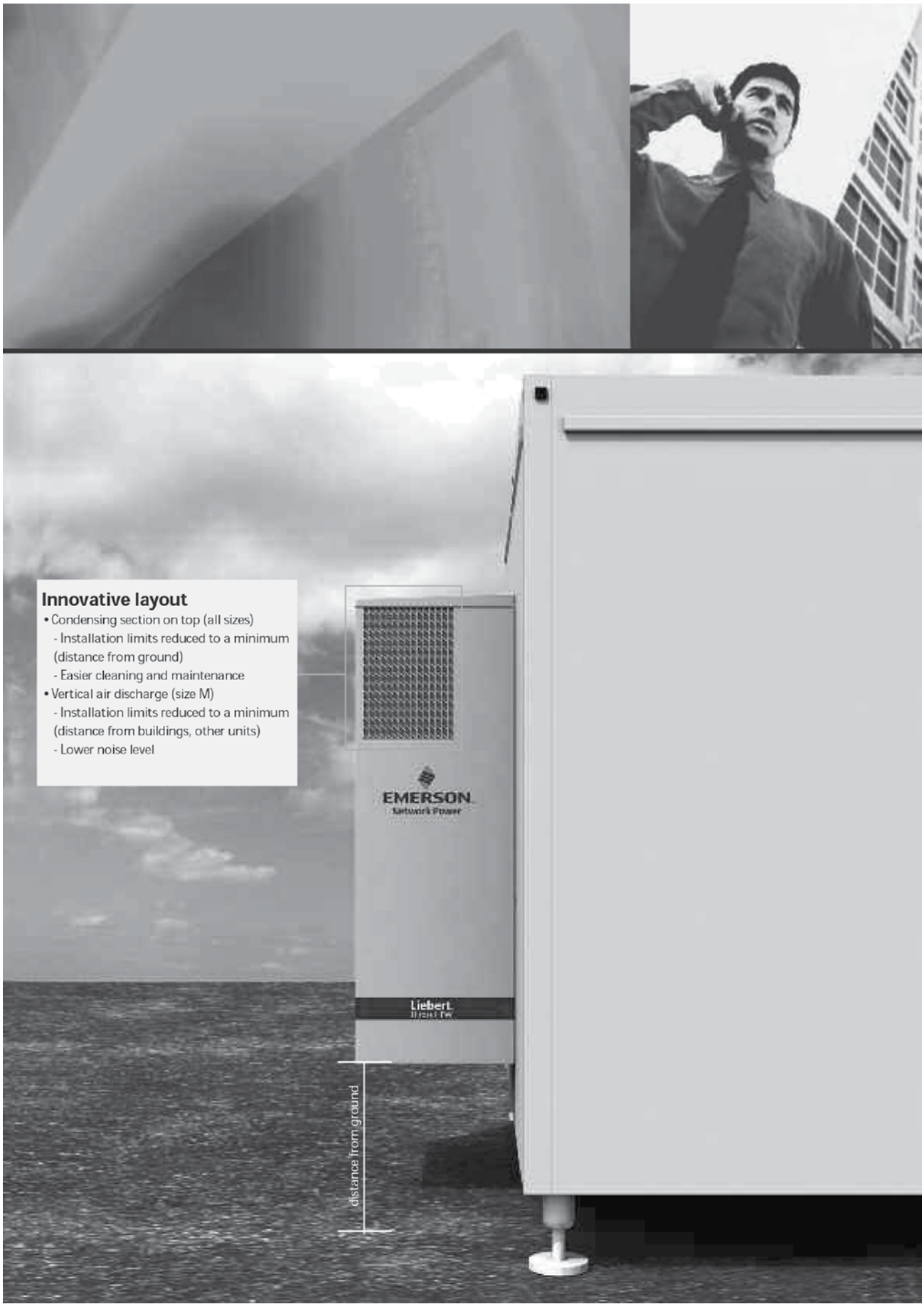
Innovative layout
• Condensing section on top (all sizes)
- Installation limits reduced to a minimum (distance from ground)
- Easier cleaning and maintenance
• Vertical air discharge (size M)
- Installation limits reduced to a minimum (distance from buildings, other units)
- Lower noise level
EMERSON
Network Power
Liebert
distance from ground



Total Cost of Ownership

Target fast return on investment.

- **Limited energy consumption**
  The downflow air distribution produces unit Energy Efficiency Ratio values close to or higher than 3, even in critical environmental conditions (T higher than 40°C).

  This, combined with the innovative free cooling system, can drastically reduce the yearly energy consumption.

- **Avoiding inefficient cooling**
  Cooling the electronics and not the site is what effectiveness can do, not efficiency. The possibility, thanks to the Liebert HPW downflow version, to provide cooling at the telecom equipment air intakes, reduces the typical inefficiency of indirect cooling systems.

- **Reduced installation impact**
  The cooling system is pre-charged and no pres- sure test is required on site. The installation is simplified thanks to the availability of pre-arran- ged air ducts (standard) and fast plug electrical connections (optional).

  Using the automatic commissioning software, installation and start-up can be completed in less than 25 min without the need for speciali- zed personnel on site.





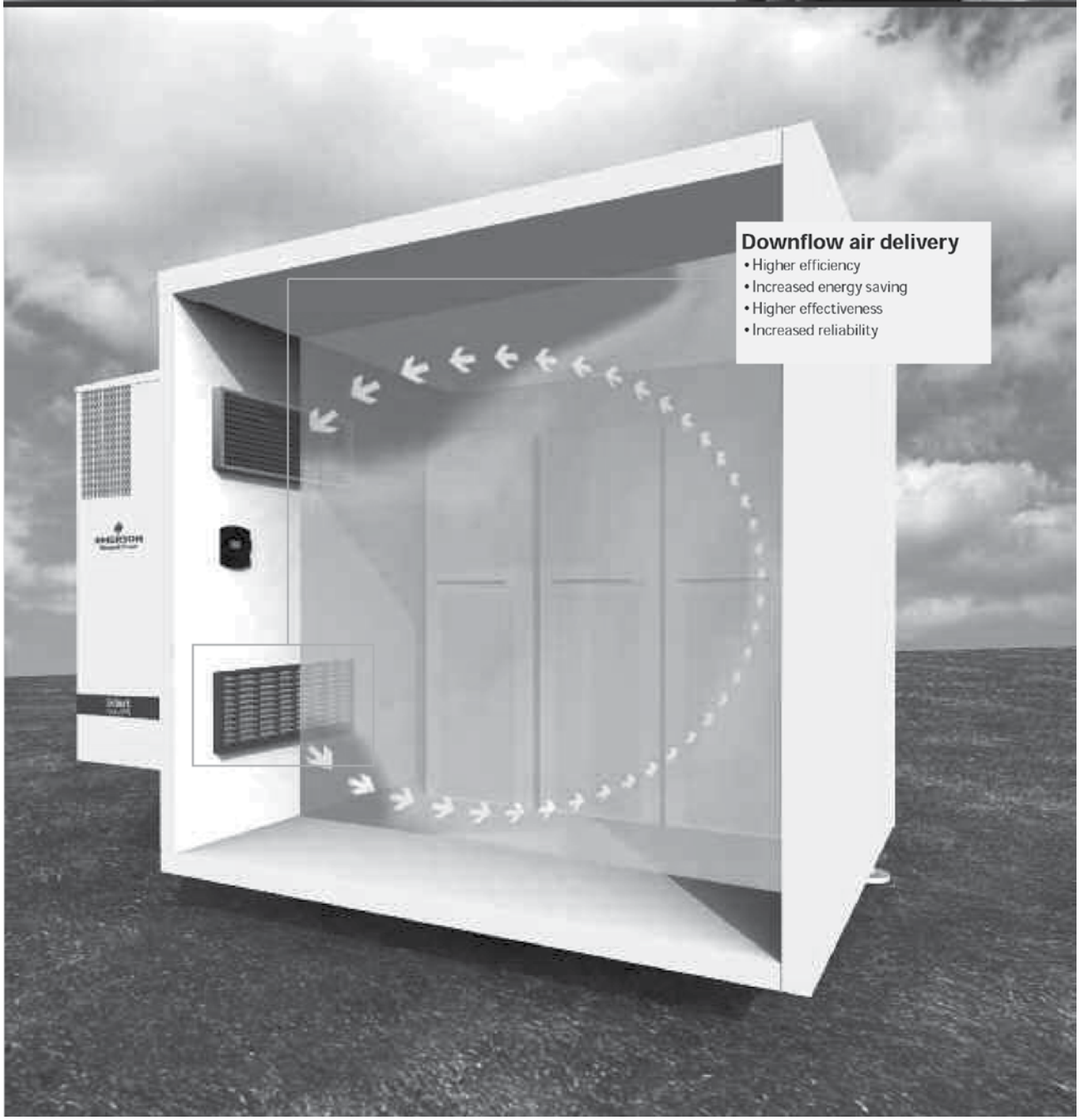
Downflow air delivery
• Higher efficiency
• Increased energy saving
• Higher effectiveness
• Increased reliability

Technical Specifications

Technical Data

Downflow (D Version)

Model		05S	06S	06M	08M	10M	13M	15M
Performances								
Main power supply		230 / 1N / 50			400 / 3N / 50			
Emergency power supply		48 VDC or 230 / 1N / 50						
Total cooling capacity [1]	kW	5,5	6,3	6,5	8,9	11,7	13,0	14,9
RSensible cooling capacity [1]	kW	5,5	5,8	6,2	8,9	10,9	13,0	14,0
SHR[1]	-	1	0,92	0,95	1	0,93	1	0,94
Compressor AC power input	kW	1,26	1,63	1,46	1,90	2,66	2,56	3,29
Evaporator fan DC power input	kW	0,10	0,10	0,10	0,28	0,45	0,45	0,82
Condenser fan AC power input	kW	0,25	0,25	0,20	0,22	0,72	0,68	0,69
Evaporator airflow	m^3/h	1110	1110	1300	1950	2300	2615	2820
Freecooling airflow	m^3/h	1310	1310	1440	2420	2420	2850	3000
Condenser max. airflow	m^3/h	2610	2610	3710	3710	5660	5880	5880
Outdoor SPL [2]	dB(A)	52,5	54,0	50,0	52,0	55,0	55,0	58,0
Indoor SPL [2]	dB(A)	57,0	57,0	57,0	60,0	64,0	59,0	63,0
Max. ambient temperature[3]	°C	49,0	47,0	52,0	50,5	50,0	51,0	48,5

Technical Data

Over (O Version)

Model		05S	06S	06M	08M	10M	13M	15M
Performances								
Main power supply		230 / 1N / 50			400 / 3N / 50			
Emergency power supply		48 VDC or 230 / 1N / 50						
Total cooling capacity [1]	kW	5,3	6,0	5,7	8,2	11,1	12,0	13,8
Sensible cooling capacity [1]	kW	4,6	5,0	5,4	8,0	9,5	10,2	11,2
SHR[1]	-	0,87	0,83	0,95	0,98	0,86	0,85	0,80
Compressor AC power input	kW	1,25	1,63	1,49	1,93	2,68	2,60	3,30
Evaporator fan DC power input	kW	0,10	0,10	0,10	0,45	0,45	0,45	0,78
Condenser fan AC power input	kW	0,25	0,25	0,20	0,22	0,72	0,68	0,72
Evaporator airflow	m^3/h	1060	1060	1360	2130	2300	2300	2450
Freecooling airflow	m^3/h	1090	1090	1360	2400	2400	2700	2840
Condenser max. airflow	m^3/h	2610	2610	3710	3710	5660	5880	5880
Outdoor SPL [2]	dB(A)	52,5	54,0	49,5	52,0	55,0	55,0	58,0
Indoor SPL [2]	dB(A)	57,0	57,0	57,0	64,0	64,0	64,0	67,0
Max. ambient temperature[3]	°C	49,5	47,5	52,0	50,0	50,0	51,0	48,5

All data are referred to 48 VDC emergency version.

(1) Values are referred to 35°C outdoor temperature, to nominal power supply and the following indoor conditions:

- 30°C/39,5%R.H. at the evaporating air intake side for WM 05-15 D models
- 27°C/47%R.H. at the evaporating air intake side for WM 05-15 O models

(2) Measured with 35°C outdoor temperature, at 2m from the unit, in free field conditions

(3) Referred to:

- 30°C/39,5%R.H. at the evaporating air intake side for WM 05-15 D models
- 27°C/47%R.H. at the evaporating air intake side for WM 05-15 O models

Technical Data

Unit description

Model		05S	06S	06M	08M	10M	13M*	15M
Compressor type/quantity		scroll / 1						
Refrigerant		R407C						
Expansion device		thermostatic valve						
Evaporator fan type/quantity AC		Plug / 1						Plug / 2
Evaporator fan type/quantity DC (48V)								
Condenser fan type/quantity		Axial / 1						
Condenser fan speed control		variable (option)						
Filter type/efficiency		pleated / G3						
Electrical heating (option)			1,5		3,0			6,0
Frame		galvanized steel						
Painting		polyester / RAL 7035						
Insulation type / thickness		polyethylene foam, class 1						
Width	mm	800		932				
Depth	mm	450		640				
Height	mm	1690		1901				
Weight	kg	170	175	195	205	220	250	260

*: Plug/2 version available on special request

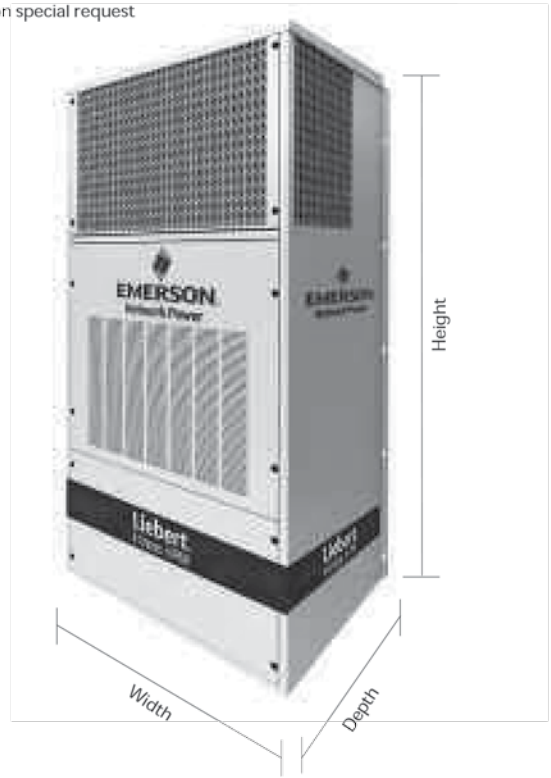

This page is intentionally left blank.

Room Cooling

This page is intentionally left blank.

Liebert® PEX (Large Frame)

Understanding the 3 Rs of Precision Cooling



Despite the claims of different vendors promoting their own, specialized solutions, there is no silver bullet when it comes to precision cooling for every application. There is only the most appropriate cooling solution for your infrastructure, and an understanding of each cooling design can help determine which cooling approach and solution can best meet your business goals and infrastructure requirements.

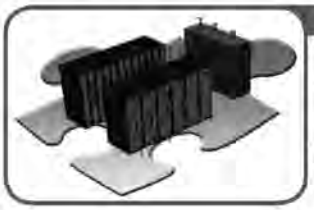

Room Cooling

While densities are climbing steadily, standard density facilities remain the norm. Traditional room cooling uses precision air conditioners and is the most appropriate solution for these standard density environments. The standard complexity, ease of deployment and precision humidity and filtration control of these systems have seen hundreds of thousands of units deployed in critical facilities across Asia, with more added every day. Combined with a raised floor, precision air conditioners deliver the best value for money and represents significant increased efficiency over building or comfort cooling.



Row Cooling

If energy efficiency is top concern, row cooling can improve efficiency over the standard room approach by more than 30 percent. It supports high density applications by the utilization of cold aisle containment. Row cooling with SmartAisle™ can further improve efficiency and provide uniform and predictable temperature and humidity control to equipment with or without raised floor.

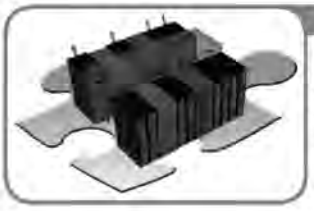

Rack Cooling

One of the proven best-practice approaches to dealing with high density heat issues is by bringing cooling technologies closer to the source of heat. Specialized precision cooling solutions for racks can support ultra-high-density applications, up to and above 30kW per rack. This dedicated cooling approach specifically cools a rack by providing the best direct air flow intake of the critical equipment.



The Liebert PEX: More Than A Single Energy Efficient component

- The efficiency of the Liebert PEX is engineered into the product. Each component that goes into the Liebert PEX is carefully tested to ensure that it will contribute to its overall efficiency.
- All enchancements to energy efficiency are designed to reduce operating time and cycling of key components and increase reliability.
- In addition to having components that are individually engineered to provide the best efficiency, how these components work and interact with each other also contribute to the energy savings you get with the Liebert PEX.

Key Features Contributing To The Superior Efficiency Of The Liebert PEX

1 EC Fan

The EC fan technology regulates airflow and reduces the fan input power. In-floor configuration further reduces energy consumption in downflow units. This significantly reduces energy consumption and provides longer component life. Managed through Liebert iCOM controls, EC fans deliver airflow for the optimal operating conditions for IT equipment.

2 Digital Scroll Compressor

Liebert PEX with Digital Scroll Technology is highly reliable and is designed to achieve efficiency with flexibility and to lower TCO. The use of digital scroll technology actively manages capacity modulation from 20 percent to 100 percent. During the loaded state, cooling units consume full load power. On the other hand, during the unloaded state, the units run freely, consuming only about 10 percent of the full load.

3 iCOM Controller

The teamwork mode in the iCOM Controller, a key feature of the Liebert PEX, ensures efficiency by allowing multiple units to work together as a single system to optimize room performance.

4 Infrared Humidifier

The Infrared Humidifier has been a feature on Liebert environmental control systems for over 45 years. Its rapid response and the ability to handle varying water conditions has made it an industry standard in applications that demand precise, particle-free humidity control.

5 Dual Cool Option

This option a provides a second coil that utilises the central building Chiller system water supply. The unit can function either as a DX (compressorized) or a Chilled water system. During times when the chiller supply is available compressorized operation is eliminated, reducing energy costs. In addition this option can provide increased redundancy and flexibility to the environmental control system.

6 Free Cool Option

Optional GLYCOOL free-cooling system permits compressorless operation in colder ambient conditions.

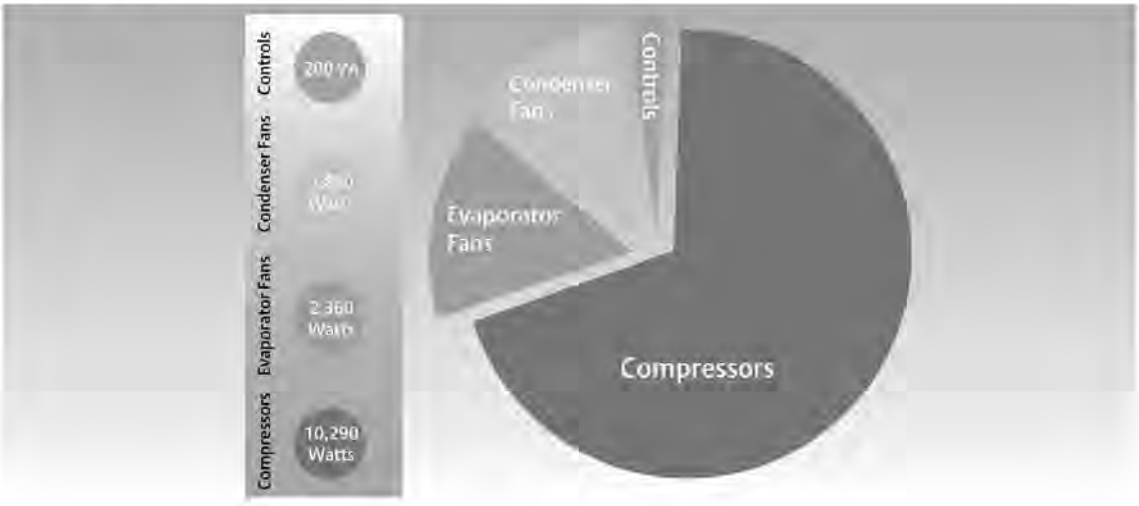

Why Precision Cooling?

Traditional approaches to cooling are only effective and efficient to a point. Unfortunately, a number of IT organizations still rely on commercial air conditioners to cool their critical facilities. Commercial air conditioning, known for its low upfront costs, is both ineffective and problematic. It does not address the needs of sensitive electronics such as year-round cooling, humidity & temperature control and air filtration, which makes Precision Cooling the only real solution for these applications.

Comfort Cooling vs. Precision Cooling

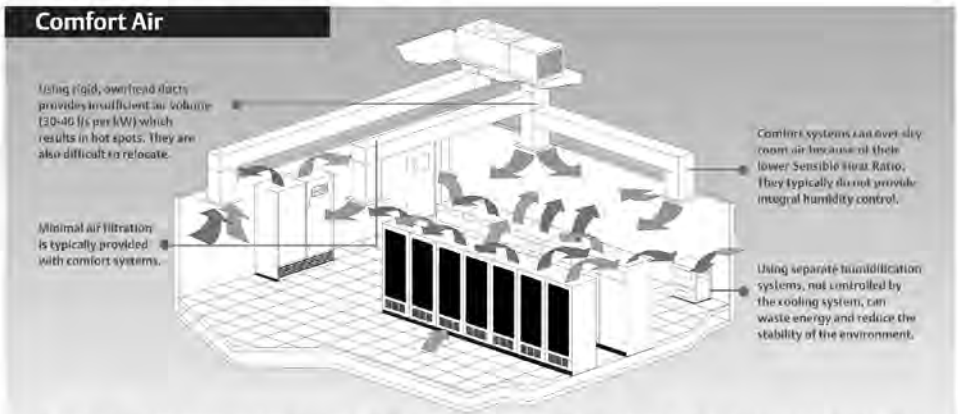

Comfort cooling systems are not designed for continuous operations. These systems lack the scalability, adaptability and precision required to effectively cool the server racks being deployed today.

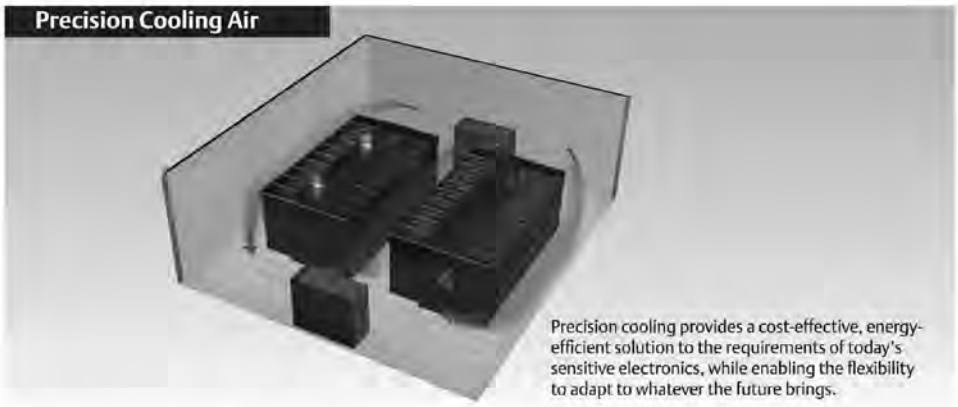

Precision cooling provides a cost-effective, energy-efficient solution to the requirements of today's sensitive electronics, while enabling the flexibility to adapt to whatever the future brings.

Why run the risk of relying on building air?

- **RISK:** These systems shut down overnight on weekends
- **RISK:** Systems designed to operate 5 x 8 vs. Continuous Operation.
- **RISK:** Insufficient filtration for IT equipment and no humidity control
- **RISK:** Building air removes too much moisture, introducing the risk of static discharge
- **RISK:** Insufficient airflow causes overheating in IT equipment (Airflow designed for comfort not correct delivery for IT)
- **COST:**
  - Building air is designed to cool people (heat and sweat)
  - As a consequence a lot of energy (cost) goes into removing that moisture
  - This energy is wasted where building air is used to cool machines

** SMB study June 2008*

Room Cooling Attributes



Energy Efficiency

Communications and Monitoring

System Supervision and Management

Multiple Configurations

Space Savings

When to Select Room Cooling

- Standard / Medium / High density environments
  - in room / raised floor
- Open architecture
  - Delivers filtration and humidity control
  - Thermal Mass minimizes risk of thermal runaway
  - Low complexity / ease of deployment
  - Broad capacity range
  - Redundancy / load sharing
  - Widest choice of cooling mediums
- Suitable for Mega Data Centers
  - For affordable and realistic redundancy
- Proven and time tested
  - Over 200,000 units deployed in Asia





Liebert PEX: Energy Efficient Room Cooling Solution

Liebert PEX is the most accessible for the broadest range of business needs. It represents a straightforward and effective solution to the majority of low to medium density applications. It reliably services the thermal requirements of a critical data center. The solution requires nothing more than direct front access for installation and routine servicing. This means that users can achieve 100% space utilization around the unit and not suffer dead space caused by service access requirements on the sides and rear.

Improved Energy Efficiency



EC Fan

The innovative energy efficient EC fan technology integrated with continuous speed control across the full operating range provides greatest value to the end user. The technology offers a simple and cost effective way of introducing energy efficient technology into the Liebert PEX. EC fan technology regulates airflow and reduces the fan input power. This significantly reduces energy consumption and provides longer component life. Managed through Liebert iCOM controls, EC fans deliver airflow for the optimal operating conditions for IT equipment.

Features and Benefits

- 10-30% less energy than average standard AC motor
- Backward curved, corrosion resistant aluminum fan impeller
- Electronically commutated motor, AC to DC conversion
- Direct driven with integrated electronics
- True soft start with inrush current lower than full load current



Liebert PEX Down Flow Unit



Down Flow EC Fan Assembly



Up Flow EC Fan Assembly

Merging Cooling Technologies

The Liebert PEX becomes the ultimate solution by combining the most reliable cooling technologies in the industry - The EC fan and Digital Scroll (DS) compressor technology. EC fan plays an integral role in the Liebert PEX by providing effective capacity control while retaining high energy efficiency and low noise levels. The DS compressor technology in the Liebert PEX enables superior room condition, humidity and temperature control by adapting to changing sensible heat load and latent conditions.

Digital Scroll

Liebert PEX with Digital Scroll technology is highly reliable and is designed to achieve efficiency with flexibility and to lower TCO. Emerson Precision Cooling units with Digital Scroll technology actively manage achieving capacity modulation from 20 percent to 100 percent. During the loaded state, cooling units consume full load power. On the other hand, during the unloaded state, the units run freely, consuming down to about 10 percent of the full load. Scalable, the Liebert Digital Scroll automatically adjusts to yearly increases in heat load. It is available on air cooled, water cooled, glycol cooled, dual cool and free cool models.

Single compressor models utilize Digital Scroll compressor while dual compressor models utilize two Digital Scroll compressors to provide the maximum energy benefit at part loads and system cooling and dehumidification cycles.

Emerson
Digital Scroll
Compressor



Features and Benefits

- Up to 30% less energy
- Variable capacity compressor can improve efficiency at less than peak capacity / on part load condition
- More precise control of the environment
- Save power at reduced duty (lower loads)
- Fast regulation to rapidly changing loads
- Powered by 50/60 Hz AC without frequency converter
- Lower EMC compared to variable frequency drives



Digital Scroll Compressor Liebert PEX Up Flow Model

Managed by the iCOM control system, the combination of these technologies not only provides precise temperature control but also provides relative humidity control without initially resorting to dehumidifying or humidifying. It helps lower operating costs and reduces energy consumption by as much as 30 percent, compared to standard cooling solutions.

Ensuring Availability

Proactive Control and Monitoring of Critical Systems

High-Level Supervision to Multiple Units with the Liebert iCOM Control System

1 Energy Efficiency With Teamwork Mode

The Liebert iCOM control system featured on the Liebert PEX brings high-level supervision to multiple units allowing them to work together as a single system to optimize room performance.

2 Additional Views Available with Large Graphic Displays

The optional Large Graphic Display features a 320x240 dot matrix backlit screen with helpful system and maintenance views. It allows you to see the average operation of the "system" or all units that are working together in Unit to Unit (U2U) Communication mode for Teamwork or Lead/Lag from a centralized location.

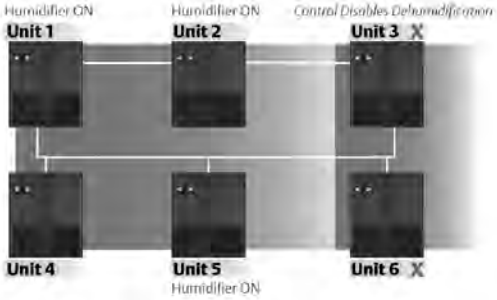

3 Easy Serviceability With The Liebert iCOM



Monitors all system functions and reports alarm.



Removable display makes servicing easier



Unit Diary

Free field areas are within the unit memory where unit maintenance shares history with any authorized users or logged-in service contacts, including record of what others have done.

Enterprise Management with Liebert SiteScan® Web Software

For customers who require extensive management of critical system equipment that may span multiple locations in an ever-moving global enterprise, Liebert SiteScan® Web will centrally manage your critical equipment and give you the power to move beyond the event-responsive service paradigm.

SiteScan Web does it all

- Real-Time Monitoring and Control
- Event Management and Reporting
- Data Analysis and Trending
- Building Management Integration

Liebert SiteScan® Web is a comprehensive critical systems management solution dedicated to ensuring reliability through graphics, event management and data extrapolation. The standard Web interface allows users easy access from anywhere at anytime.

- Single and multi-site applications
- Event management and unit control
- Trend and historical data captures and reporting
- Full ASHRAE BACnet compatibility
- Java based
- Windows 2000, XP and 2003 compatible

Adaptive Monitoring: Increase Availability and Reduce Support Costs

Adaptive monitoring technologies allow easy information maneuverability to key resources, whether you need to integrate critical system data with your Network Management System, Building Management System or enable a Web browser interface.

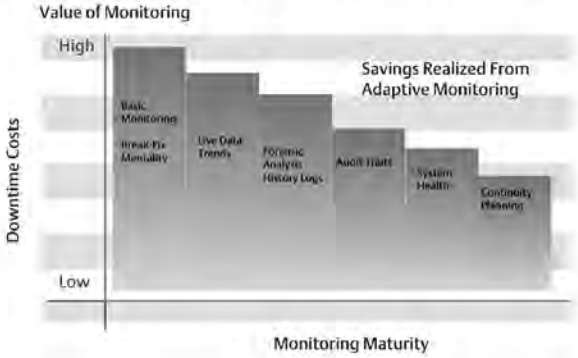

Liebert's monitoring technology puts critical systems information at the fingertips of support personal - wherever they are - addressing the increasing concern for improved internal communication between management groups surrounding a data center.

Designed for Density

Cooling Options Available on Your Liebert PEX

Configure The Liebert PEX to meet your specific needs

Up Flow

Designed for in-room or ducted applications



Down Flow

Designed for raised floor applications



Cooling Types

DX Air Cooled with Air Cooled Condenser Units	DX Water Cooled with Cooling Tower Units	DX Glycol Cooled with Closed Circuit Units
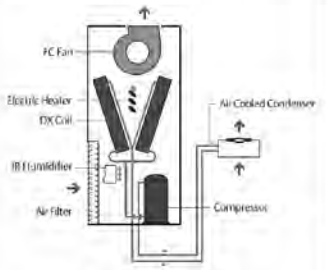 UP FLOW - FC FAN	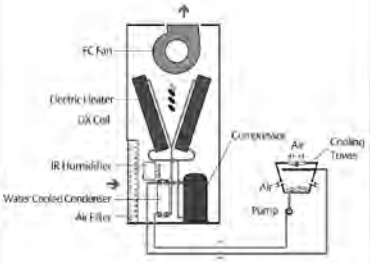 UP FLOW - FC FAN	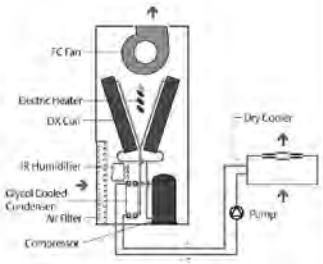 UP FLOW - FC FAN
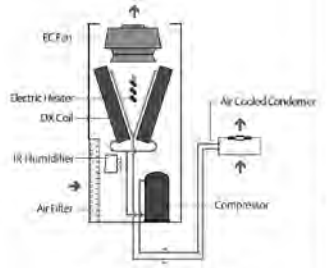 UP FLOW - EC FAN	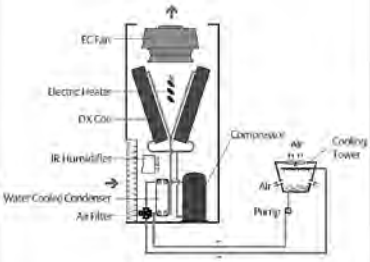 UP FLOW - EC FAN	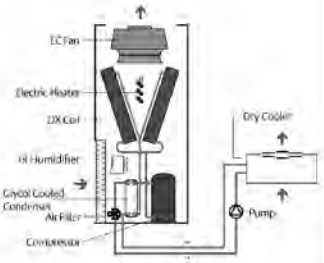 UP FLOW - EC FAN
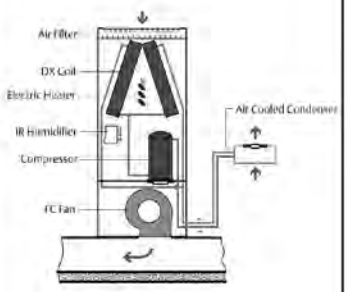 DOWN FLOW - FC FAN	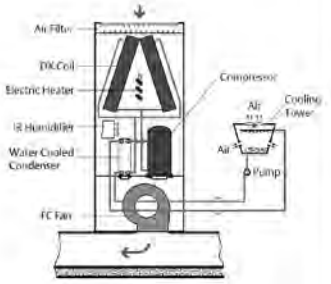 DOWN FLOW - FC FAN	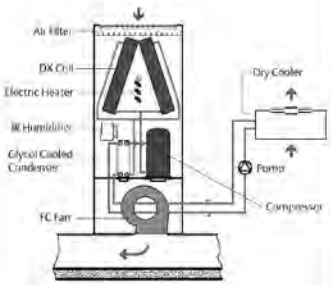 DOWN FLOW - FC FAN
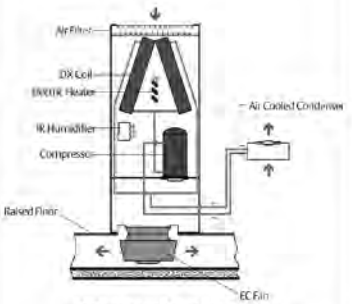 DOWN FLOW - EC FAN	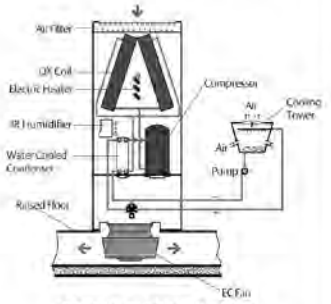 DOWN FLOW - EC FAN	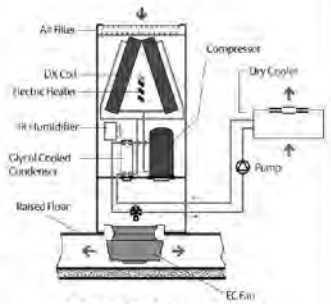 DOWN FLOW - EC FAN

All cooling types are available in single and dual compressors. Single compressor diagrams are shown above for clarity.

Air Cooled with Dual Cool Units	Water Cooled with Dual Cool Units	Free Cool Units
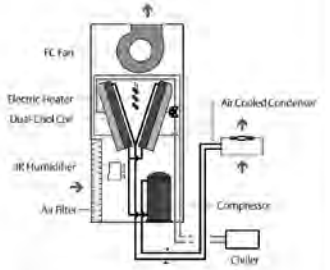	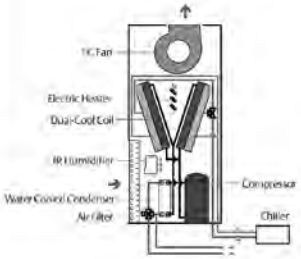	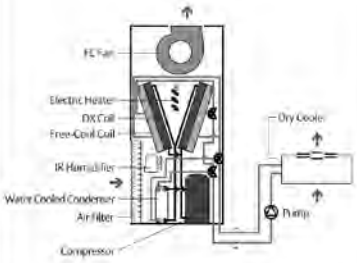
UP FLOW - FC FAN	UP FLOW - FC FAN	UP FLOW - FC FAN
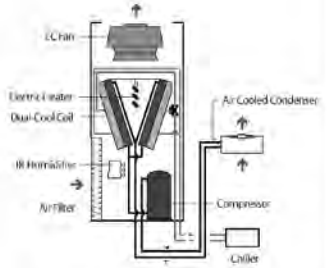	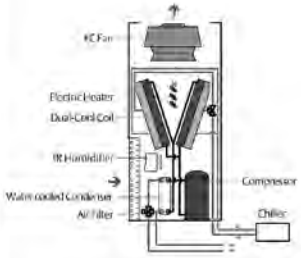	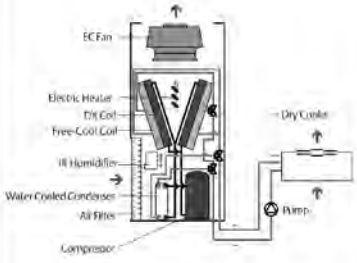
UP FLOW - EC FAN	UP FLOW - EC FAN	UP FLOW - EC FAN
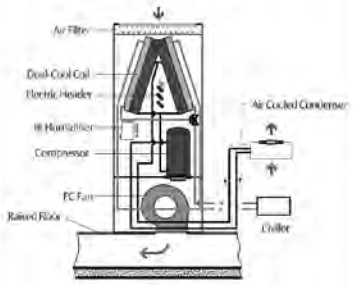	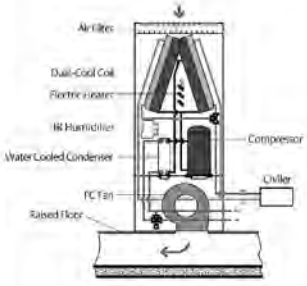	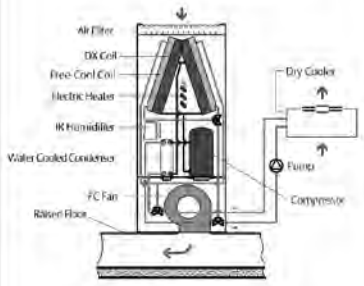
DOWN FLOW - FC FAN	DOWN FLOW - FC FAN	DOWN FLOW - FC FAN
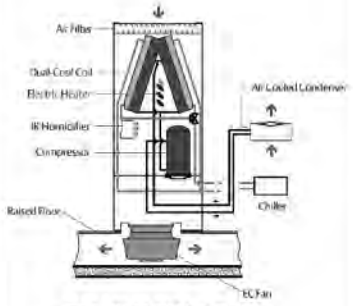	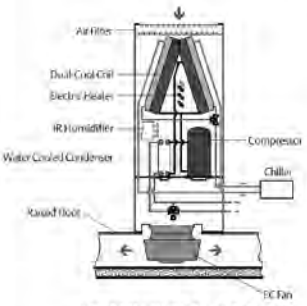	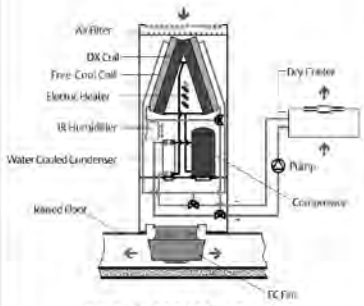
DOWN FLOW - EC FAN	DOWN FLOW - EC FAN	DOWN FLOW - EC FAN

All cooling types are available in single and dual compressors. Single compressor diagrams are shown above for clarity.

Features Summary



Energy Efficiency

- Infrared Humidifier for precise humidity control
- iCOM controller for optimized room performance
- Combined technologies of EC Fan and Digital Scroll Compressor yield higher level of efficiency
- EC Fan with infloor configuration
- Efficient dehumidification cycle



Space Savings

- 15% more kW per square meter compared to industry average
- Requires nothing more than direct front access
- Downflow EC fans serviceable from above floor without disturbing the raised floor
- Units can be dismantled and reassembled for difficult site jobs



Communications and Monitoring

- Teamwork Mode allows units to work together in rooms with unbalanced loads
- Spare parts list allows speedy identification of parts
- Unit diary shares history with any authorized users or service contacts



System Supervision and Management

- Enhanced remote communications and control with Liebert Intellislot card
- Centralized Management with Liebert Nforms software
- Enterprise Management with Liebert SiteScan Web Software



Multiple Configurations

- Twelve different configurations for Upflow and Downflow units
- Configure for your specific needs



Dual Cool

- Second coil that utilizes the central building Chiller system water supply
- Unit can function either as a DX (compressorized) or a Chilled water system
- Reduces energy cost
- Increases redundancy and flexibility to the environmental control system



Free Cool

- Glycol Free Cool System
- Unit can function as a DX (compressors), or Free Cool or mixed for energy savings
- Reduces energy costs in colder climates

Technical Specifications

Downflow - DX															
Model Size	1020	1025	1030	1035	2035	2045	2055	2040	2050	2060	2070	3070	3080	3090	3100
DX - Air, Water, Glycol, Free Cool based on 24°C DB, 50% RH, 45°C Condensing															
Digital Scroll compressor - EC Fan															
DX Total kW	20.3	23.2	27.6	33.2	37.0			41.3	47.2	55.1	67.0	74.0			
Sensible kW	20.1	22.6	26.4	30.4	35.2			39.2	44.9	52.8	62.4	72.4			
Air Flow m^3/h	6,500	7,500	7,800	8,500	10,000			11,200	13,800	15,500	17,600	23,000			
Scroll compressor - EC Fans															
DX Total kW	20.3	23.2	30.4	33.2	37.0	45.8	54.0	41.3	47.2	60.9	67.0	74.0	82.7	89.8	100.0
Sensible kW	20.1	22.6	28.2	30.4	35.2	44.6	53.1	39.2	44.9	57.4	62.4	72.4	78.4	86.1	92.8
Air Flow m^3/h	6,500	7,500	8,300	8,500	10,000	14,000	16,000	11,200	13,800	17,000	17,600	23,000	25,000	25,500	25,800
Scroll compressor - FC Fans															
DX Total kW	20.0	23.1	30.1	33.1	36.6	45.0	53.2	41.0	46.4	60.6	66.9	73.9	81.4	89.3	100.0
Sensible kW	18.9	21.5	26.6	29.4	35.1	41.7	47.3	38.5	43.2	53.5	59.0	68.2	71.1	79.6	88.4
Air Flow m^3/h	5,670	6,660	8,280	8,190	9,900	12,240	13,680	10,980	12,960	16,200	16,020	20,160	20,160	23,940	23,760
Dual Cool - 24°C DB, 50% RH, 45°C condensing, CW Based on 7°C EWT, 12°C LWT															
Digital Scroll compressor - EC Fan															
DX Total kW	20.3	23.2	27.4		37.0			41.3	47.2	55.6	67.0	74.0			
Sensible kW	20.1	22.6	25.1		35.2			39.2	44.9	51.2	62.4	72.4			
CW Total kW	25.7	28.0	28.7		48.6			52.2	59.0	63.1	67.3	92.6			
Sensible kW	22.2	24.6	25.3		38.9			42.2	49.1	53.3	58.1	79.0			
Air Flow m^3/h	6,500	7,500	7,800		10,000			11,200	13,800	15,500	17,600	23,000			
Scroll compressor - EC Fans															
DX Total kW	20.3	23.2	30.2		37.0	45.8	54.0	41.3	47.2	61.0	67.0	74.0	82.7	90.1	100.0
Sensible kW	20.1	22.6	26.8		35.2	44.6	51.0	39.2	44.2	55.3	62.4	72.4	78.4	82.9	92.8
CW Total kW	25.7	28.0	29.4		48.6	59.7	63.5	52.2	59.0	66.1	67.3	92.6	97.2	97.8	99.0
Sensible kW	22.2	24.6	26.3		38.9	49.6	54.4	42.2	49.1	56.7	58.1	79.0	83.8	84.9	86.1
Air Flow m^3/h	6,500	7,500	8,300		10,000	14,000	16,000	11,200	13,800	17,000	17,600	23,000	25,000	25,500	25,800
Scroll compressor - FC Fans															
DX Total kW	20.0	23.1	30.1		36.6	45.0	53.2	41.0	46.4	60.6	66.9	73.9	81.4	89.3	100.0
Sensible kW	18.9	21.5	26.6		35.1	41.7	47.3	38.5	43.2	53.5	59.0	68.2	71.1	79.6	88.4
CW Total kW	23.9	26.2	29.4		48.2	54.9	58.6	51.4	57.0	64.2	63.6	86.3	86.3	94.8	95.3
Sensible kW	20.2	22.6	26.3		38.6	45.1	48.8	41.6	47.0	54.9	54.4	72.0	72.0	81.3	81.4
Air Flow m^3/h	5,670	6,660	8,280		9,900	12,240	13,680	10,980	12,960	16,200	16,020	20,160	20,160	23,940	23,760
Evaporator Fan - Backward curve EC motor, direct drive / Forward curve centrifugal fan, HE motor, auto tensioning drive															
No. of fan assemblies	1	1	1	1	2	2	2	2	2	2	2	3	3	3	3
Standard EC Motor kW	2.3	2.3	3.1	3.1	2.3	2.3	2.3	2.3	2.3	3.1	3.1	2.3	2.3	3.1	3.1
Standard FC Motor kW	2.2	2.2	3.0	3.0	2.2	2.2	2.2	2.2	2.2	3.0	3.0	2.2	2.2	3.0	3.0
Compressor - Copeland Compliant Scroll with Crankase Heater															
No. of compressors	1	1	1	1	1	1	1	2	2	2	2	2	2	2	2
Unit cooling steps	2 via HGBP							2 via Compressors							
Compressor - Copeland Digital Scroll with Crankase Heater															
No. of compressors	1	1	1	1	1	1	1	2	2	2	2	2	2	2	2
Capacity modulation	20% to 100%							10% to 100%							
Humidification															
Standard Infrared - kg/h	4.5	4.5	4.5	4.5	10	10	10	10	10	10	10	10	10	10	10
Reheat - electric heater elements															
Standard 1 stage - kW	6	6	6	6	9	9	9	9	9	9	9	12	12	12	12
Optional 2 stage - kW	12	12	12	12	18	18	18	18	18	18	18	24	24	24	24
Electrical 400V 50Hz 3Phase - Std DX unit only															
RFLA	22.7	24.8	31.3	33.2	40.0	45.8	53.4	39.4	43.6	56.6	60.4	61.4	67.2	76.9	86.9
Unit Dimensions & Weight															
Width - mm	853	853	853	853	1703	1703	1703	1703	1703	1703	1703	2553	2553	2553	2553
Depth - mm	873	873	873	873	873	873	873	873	873	873	873	873	873	873	873
Height - mm	1970														
Unit Weight - kg	350	360	370	380	600	610	630	650	670	700	720	970	990	1030	1050
Unit Footprint															
Unit only - m^2	0.74	0.74	0.74	0.74	1.49	1.49	1.49	1.49	1.49	1.49	1.49	2.23	2.23	2.23	2.23
Incl. Service area - m^2	1.47	1.47	1.47	1.47	2.93	2.93	2.93	2.93	2.93	2.93	2.93	4.40	4.40	4.40	4.40
Service Access min - mm	850														

Notes

All rated capacities are nominal values based on an ESP for Downflow 20pa and for Upflow 50Pa, at sea level, for R407c and R22. For net capacities, deduct fan input power. Refer to the Liebert PEX Rating Program for specific input conditions, air flow, and configuration. Minimum unit depth without front panels and hinges is 841mm. Minimum raised floor height 325mm for EC fan units. Weights shown are for water cooled DX models only. Input power supply 400V +/-15%, 50Hz +/- 2. RFLA is for the standard configuration unit only and excludes all heat rejection equipment, Chillers and Pumps etc,. RFLA is based on standard unit with EC fan. Refer to Liebert PEX Rating Program & User Manual for electrical data on optional equipment. All information and Technical Data are subject to change without notice

Technical Specifications

Upflow - DX																
Model Size		1020	1025	1030	1035	2035	2045	2055	2040	2050	2060	2070	3070	3080	3090	3100
DX - Air, Water, Glycol, Free Cool based on 24°C DB, 50% RH, 45°C Condensing																
Digital Scroll compressor - EC Fans																
DX	Total kW	19.9	22.4	26.7	32.8	36.6			40.7	45.8	54.3	66.3	71.9			
	Sensible kW	19.8	22.3	26.1	29.4	35.0			39.0	44.6	52.7	60.2	71.4			
	Air Flow m^3/h	6,500	7,500	7,800	8,500	10,000			11,200	13,800	15,500	17,480	23,000			
Scroll compressor - EC Fans																
DX	Total kW	19.9	22.4	29.5	32.8	36.6	44.5	53.3	40.7	45.8	59.5	66.3	71.9	80.0	88.0	98.7
	Sensible kW	19.8	22.3	28.0	29.4	35.0	44.2	52.9	39.0	44.6	57.1	60.2	71.4	77.8	85.2	88.9
	Air Flow m^3/h	6,500	7,500	8,300	8,500	10,000	14,000	16,000	11,200	13,800	17,000	17,480	23,000	25,000	25,170	25,170
Scroll compressor - FC Fans																
	Total kW	19.4	22.1	29.2	32.4	36.5	44.4	52.0	39.5	45.7	57.9	65.9	71.8	79.4	87.2	97.9
	Sensible kW	18.3	20.7	25.9	28.0	34.8	40.7	46.1	37.2	42.0	51.6	56.3	66.2	69.2	77.5	83.9
	Air Flow m^3/h	5,400	6,300	7,870	7,920	9,720	11,610	13,030	10,440	12,240	15,390	15480	19,190	19,190	22,770	22,860
Dual Cool - 24°C DB, 50% RH, 45°C Condensing. CW Based on 7°C EWT, 12°C LWT																
Digital Scroll compressor - EC Fans																
DX	Total kW	19.9	22.4	26.5		36.6			40.7	45.8	54.2		71.9			
	Sensible kW	19.8	22.3	24.9		35.0			39.0	44.6	50.4		71.4			
CW	Total kW	25.7	28.0	28.7		48.6			52.2	59.0	63.1		92.6			
	Sensible kW	22.2	24.6	25.3		38.9			42.2	49.1	53.3		79.0			
	Air Flow m^3/h	6,500	7,500	7,800		10,000			11,200	13,800	15,500		23,000			
Scroll compressor - EC Fans																
DX	Total kW	19.9	22.4	29.3		36.6	44.5	52.2	40.7	45.8	59.3		71.9	80.0	87.5	
	Sensible kW	19.8	22.3	26.6		35.0	44.2	50.5	39.0	44.6	54.9		71.4	77.8	81.9	
CW	Total kW	25.7	28.0	29.4		48.6	59.7	63.5	52.2	59.0	66.1		92.6	97.2	97.8	
	Sensible kW	22.2	24.6	26.3		38.9	49.6	54.4	42.2	49.1	56.7		79.0	83.8	84.9	
	Air Flow m^3/h	6,500	7,500	8,300		10,000	14,000	16,000	11,200	13,800	17,000		23,000	25,000	25,170	
Scroll compressor - FC Fans																
DX	Total kW	19.4	22.1	29.2		36.5	44.4	52.0	39.5	45.7	57.9		71.8	79.4	87.2	
	Sensible kW	18.3	20.7	25.9		34.8	40.7	46.1	37.2	42.0	51.6		66.2	69.2	77.5	
CW	Total kW	23.2	25.3	28.5		47.5	53.4	57.3	50.0	54.9	62.7		83.6	83.6	91.9	
	Sensible kW	19.5	21.7	25.4		38.0	43.4	47.2	40.1	45.1	53.0		69.5	69.5	78.5	
	Air Flow m^3/h	5,400	6,300	7,870		9,720	11,610	13,030	10,440	12,240	15,390		19,190	19,190	22,770	
Evaporator Fan - Backward curve EC motor, direct drive / Forward curve centrifugal fan, HE motor, auto tensioning drive																
No. of fan assemblies		1	1	1	1	2	2	2	2	2	2	2	3	3	3	3
Standard EC Motor kW		2.3	2.3	3.1	3.1	2.3	2.3	2.3	2.3	2.3	3.1	3.1	2.3	2.3	3.1	3.1
Standard FC Motor kW		2.2	2.2	3.0	3.0	2.2	2.2	2.2	2.2	2.2	3.0	3.0	2.2	2.2	3.0	3.0
Compressor - Copeland Compliant Scroll with Crankase Heater																
No. of compressors		1	1	1	1	1	1	1	2	2	2	2	2	2	2	2
Unit cooling steps		2 via HGBP							2 via Compressors							
Compressor - Copeland Digital Scroll with Crankase Heater																
No. of compressors		1	1	1	1	1	1	1	2	2	2	2	2	2	2	2
Capacity modulation		20% to 100%							10% to 100%							
Humidification																
Standard Infrared - kg/h		4.5	4.5	4.5	4.5	10	10	10	10	10	10	10	10	10	10	10
Reheat - electric heater elements																
Standard 1 stage - kW		6	6	6	6	9	9	9	9	9	9	9	12	12	12	12
Optional 2 stage - kW		12	12	12	12	18	18	18	18	18	18	18	24	24	24	24
Electrical 400V 50Hz 3Phase - Std DX unit only																
RFLA		22.7	24.8	31.3	33.2	40.0	45.8	53.4	39.4	43.6	56.6	60.4	61.4	67.2	76.9	86.9
Unit Dimensions & Weight																
Width - mm		853	853	853	853	1703	1703	1703	1703	1703	1703	1703	2553	2553	2553	2553
Depth - mm		873	873	873	873	873	873	873	873	873	873	873	873	873	873	873
Height - mm		1970														
Unit Weight - kg		350	360	370	380	600	610	630	650	670	700	720	970	990	1030	1050
Unit Footprint																
Unit only - m^2		0.74	0.74	0.74	0.74	1.49	1.49	1.49	1.49	1.49	1.49	1.49	2.23	2.23	2.23	2.23
Incl. Service area - m^2		1.47	1.47	1.47	1.47	2.93	2.93	2.93	2.93	2.93	2.93	2.93	4.40	4.40	4.40	4.40
Service Access min - mm		850														

Notes

All rated capacities are nominal values based on an ESP for Downflow 20pa and for Upflow 50Pa, at sea level, for R407c and R22. For net capacities, deduct fan input power. Refer to the Liebert PEX Rating Program for specific input conditions, air flow, and configuration. Minimum unit depth without front panels and hinges is 841mm. Minimum raised floor height 325mm for EC fan units. Weights shown are for water cooled DX models only. Input power supply 400V +/-15%, 50Hz +/-2. RFLA is for the standard configuration unit only and excludes all heat rejection equipment, Chillers and Pumps etc.. RFLA is based on standard unit with EC fan. Refer to Liebert PEX Rating Program & User Manual for electrical data on optional equipment. All information and Technical Data are subject to change without notice

Guide Specification for Liebert PEX (Large Frame)

GENERAL

Summary

These specifications describe requirements for a Mission Critical Cooling system. The system shall be designed to control temperature and humidity conditions in rooms containing electronic equipment, with good insulation and vapour barrier. The manufacturer shall design and furnish all equipment to be fully compatible with heat dissipation requirements of the room.

PRODUCT

Design Requirements

The Mission Critical Cooling system shall be a Liebert PEX model _____ self-contained factory assembled unit with (upflow) (downflow) air delivery. The system shall have a total cooling capacity of _____ kW, with a sensible cooling capacity of _____ kW, based on an entering air temperature of ____ °C dry bulb and ____°C wet bulb. The unit is to be supplied with ____ volt ___ ph ___Hz electrical service and include a rating nameplate stating the unit FLA or kW/kVA.

Cabinet Construction

The frame shall be constructed of 2.5, 2.0 and 1.2 mm folded galvanised steel. The exterior panels shall be constructed of 1.2 mm zinc coated sheet steel and insulated with foam insulation. The cabinet shall be powder coated in Charcoal Grey colour and have a textured finish. The hinged front panels shall be removeable and include captive 1/4 turn fasteners. The cabinet shall be assembled with pop rivets providing ease of disassembly.

Filtration

The filter panels shall be an integral part of the system and withdrawable from the front of the unit. Filtration shall be provided by deep V form, dry disposable media housed in a metal frame. The rated efficiency shall be G4 to AS/NZS 1324.1 (MERV8 to ASHRAE 52.2 Standard).

Standard FC Fans - Direct Expansion and Chilled Water Systems

The fan section shall be designed for _____ l/s at an external static pressure of ____ Pa. The unit shall be fitted with one (two,three) belt-driven, forward curved (FC) centrifugal type, double width, double inlet fan(s). Each fan shall be separately driven by a MEPS compliant (for Australia), EFF1 efficiency electric motor rated at ____ kW at ____ RPM with an IP55 enclosure rating. The drive arrangement shall be self-tensioning and provide for belt replacement without the use of tools. They shall be statically and dynamically balanced.

Optional EC Fans - Chilled Water Systems

The fan section shall be designed for _____ l/s at an external static pressure of ____ Pa. The unit shall be fitted with one (two,three) direct-driven, high efficiency, single inlet, backward curved, centrifugal 'plug' type fan(s), with aluminium nozzle(s) and impeller(s). The fan motors shall be Electronically Commutated (EC), IP54, with internal protection and speed regulation via controller signal. They shall be statically and dynamically balanced.

HUMIDIFIER

A humidifier shall be factory installed inside the unit. Bypass air shall be used to enable moisture to be absorbed into the airstream without condensation. The humidifier capacity shall be ____ kg/hr (lb/hr). The humidifier shall be serviceable and removable from the front of the unit.

Infrared Humidifier

The humidifier shall be of the infrared type consisting of high intensity quartz lamps mounted above and out of the water supply. The humidifier pan shall be stainless steel and arranged to be removeable without disconnecting high voltage electrical connections. The complete humidifier section shall be pre-piped, ready for field connection to water supply. The humidifier shall be equipped with an automatic water supply system and shall have an adjustable water-overfeed to prevent mineral precipitation. A high-water detector shall shut down the humidifier to prevent overflowing. The humidifier shall be approved for direct connection to potable water supplies in accordance with ATS 5200.101 and carry the WaterMark label.

Optional Immersed Electrode Humidifier

Humidification shall be provided by boiling water in a high temperature polypropylene steam generator. The humidifier shall have an efficiency of not less than 1.3 kg/kW and be fitted with an auto flush cycle activated on demand from the microprocessor control system. The humidifier shall be fully serviceable with replaceable electrodes. Waste water shall be flushed from the humidifier by the initiation of the water supply solenoid
water valve via a U-pipe overflow system. Drain solenoid valves will not be used. The humidifier shall be approved for direct connection to potable water supplies in accordance with ATS 5200.101 and carry the WaterMark label. Humidifier steam nozzles shall be readily accessible for inspection and cleaning in accordance with AS/NZS 3666.2.2002 Cl 2.3.3.1.

ELECTRIC HEATING

Electric heating shall be provided in a single stage. The elements shall be low watt density, 304/304 stainless steel fin tubular construction, protected by thermal safety switches. The heating system shall include dual safety protection through loss of air and manual reset high temperature controls in accordance with AS/NZS 3102.2002 Cl 7.3.

Optional 2nd Stage Electric Heating

Electric heating shall be provided in two equal stages. The elements shall be low watt density, 304/304 stainless steel fin tubular construction, protected by thermal safety switches. The heating system shall include dual safety protection through loss of air and manual reset high temperature controls in accordance with AS/NZS 3102.2002 Cl 7.3.

COMPRESSORISED SYSTEMS

Scroll Compressor

The compressor shall be of the high efficiency Compliant Scroll design, with an E.E.R. (energy efficiency ratio) of not less than 11.1 BTUH/watt (C.O.P. of not less than 3.25) at ARI rating conditions. The compressor shall be charged with polyolester oil and designed for operation on HCFC R22 or HFC R407C. Each compressor shall have internal motor protection and be mounted on vibration isolators.

Refrigeration Circuit

The refrigeration system shall be of the direct expansion type with two cooling stages and incorporate one or two hermetic scroll compressors, complete with crankcase heaters and rotalock connections. A hot gas bypass solenoid valve shall be used on single compressor models. The system shall include a manual reset high pressure control, auto reset low pressure switch, externally equalised thermal expansion valve, high sensitivity refrigerant sight glass, large capacity filter drier with rotalock connections and charging/access ports in each circuit.

Evaporator Coil
The evaporator coil shall be a V-coil (for upflow) / A-coil (for downflow) incorporating draw-through air design for uniform air distribution. The coil shall be constructed of enhanced surface aluminium fins mechanically bonded to enhanced surface copper tubes, with the frame and drip tray fabricated from heavy gauge aluminium. All metal parts in contact with condensate shall be the same material to prevent electrolytic corrosion. The evaporator drain tray shall incorporate double sloped gutters for complete condensate removal and shall be removeable for cleaning in accordance with AS/NZS 3666.1.2002 Cl 2.8.1. The cooling coil shall be a maximum of 5 rows and 551 fins per metre (14 FPI) and the face velocity shall not be more than 2.5 m/s (500 fpm).

Dehumidification
A specific dehumidification cycle (split-suction) shall operate by reducing the operating surface temperature in a section of the refrigeration coil by means of a solenoid valve on the suction header. Room loads as low as (25% for 2 compressor models) (50% for 1 compressor models) of the unit sensible cooling capacity shall be supported during dehumidification without the need for larger capacity or additional heating stages. Full
airflow of the unit will be maintained at all times to ensure consistent air distribution to the conditioned space.

Air Cooled Systems
The indoor evaporator unit shall include refrigerant piping, with a factory holding charge of nitrogen. Each refrigeration circuit shall include rigidly mounted isolation valves in the discharge and liquid lines to aid servicing and installation. Field relief of the schrader valve shall indicate a leak-free system.

Remote Air Cooled Condenser
The model _____ air cooled condenser shall be the low profile, weatherproof type incorporating high efficiency, direct drive, external rotor motors with axial blade fans. The condenser shall balance the heat rejection of the compressor at ___°C ambient. The condenser shall be constructed from heavy duty aluminium and corrosion resistant components. Heavy duty mounting legs and all assembly hardware shall be included. Condensers shall be suitable for 24 hour operation and be capable of providing vertical or horizontal discharge. The condenser shall be fully factory wired to an input isolator and require 230 volt 1 phase ___Hz electrical service. The high performance heat exchanger shall include mechanically expanded cross-hatched copper tubes and louvred aluminium fins for maximum heat transfer. The coil shall be finished in a high performance modified epoxy coating (KoilKote®) to offer increased protection in aggressive environments. The coil shall be have a maximum of __ rows and _____ fins per metre (__ FPI) and the face velocity shall not be more than ___ m/s (___ FPM).

Fan Speed Control Condenser
The condenser fans shall be directly driven by __ pole _____ rpm 230 volt ___ Hz electric motors with an IP54 enclosure rating and class F insulation. The motors shall be equipped with permanently sealed ball bearings and high temperature grease. The motors shall be speed controlled to ensure stable operating conditions from -5°C to 45°C ambient by a factory fitted, direct acting pressure actuated electronic fan speed controller. The control system shall be complete with input isolator, transducers and pressure switch.

Water/Glycol Cooled Systems
The indoor evaporator unit shall include a plate heat exchanger fitted with rotalock connections, water regulating valve and pipework for each refrigeration circuit, complete with refrigerant holding charge. Balancing and isolation valves shall be field supplied and fitted by others. A strainer with 1mm mesh (#20) must be installed on the supply side of each water circuit by the contractor.

Water Cooled Condenser, 2 Way Regulating Valve with Bypass

The water cooled condenser/heat exchanger shall be of the high efficiency, counterflow, stainless steel brazed plate type rated for 3000 kPa (435 psig) maximum working pressure. Water/glycol flow shall be controlled by a 2-way factory fitted, pressure actuated water regulating valve rated for 1000 kPa (145 psig) maximum working
pressure. A bypass gate valve shall be fitted on larger models to bypass the regulating valve. Water/glycol requirements for the unit shall be ____ l/s (USGPM) of ____°C (°F) entering water based on a ___ K (°F) rise and produce a maximum pressure drop of 150 kPa (50 ft. of water).

Optional 3 Way Condenser Water Regulating Valve - High Pressure

An optional 3 way high pressure water regulating valve rated for 2400 kPa (350 psig) pressure shall be fitted.

CHILLED WATER SYSTEMS

The indoor evaporator unit shall include dual chilled water cooling coils, control valves and motorised actuators. The dual control valves shall provide dehumidification against reduced room loads whilst maintaining space temperatures without the need for 2nd stage reheat. Balancing and isolation valves shall be field supplied and fitted by others.

2 Way Chilled Water Control Valve

The water circuit shall include 2-way modulating forged brass ball valves and modulating non-spring return actuators. The valve body shall be designed for up to 40 bar (580 psig) (PN40) water pressure. The actuator/valve combination shall have a maximum closeoff pressure of 13.8 bar (200 psig). The microprocessor positions the valves in response to room conditions. Cooling capacity will be controlled by varying the position of the control valves. The modulating valve travel for dehumidification shall be proportional.

Optional 3 Way Chilled Water Control Valve

The water circuit shall include 3-way modulating forged brass ball valves and modulating non-spring return actuators. The valve body shall be designed for up to 40 bar (PN40) water pressure. The actuator/valve combination shall have a maximum closeoff pressure of 13.8 bar (200 psig). The microprocessor positions the valves in response to room conditions. Cooling capacity will be controlled by bypassing chilled water around the coil. The modulating valve travel for dehumidification shall be proportional.

UNIT SIZE

Compressorised Systems

The maximum footprint area of the unit shall not exceed:

- 0.75 m_2 up to 35 kW
- 1.50 m_2 above 35 and up to 70 kW
- 2.25 m_2 above 70 and up to 100 kW

The unit shall require front access only for routine service and installation work.

Chilled Water Systems

The maximum footprint area of the unit shall not exceed:

- 0.75 m_2 up to 45 kW
- 1.50 m_2 above 45 and up to 95 kW
- 2.25 m_2 above 95 and up to 150 kW

The unit shall require front access only for routine service and installation work.

ALL SYSTEMS

Water Under Floor Sensor (LWD)
Each unit shall be supplied with a single water under floor point detector as standard. Up to 5 sensors in total may be connected in series from each iCOM cooling unit. Any individual sensor shall signal a water under floor alarm to the controller upon detecting water.

iCOM Microprocessor Control with SMALL Graphic Display
The iCOM unit control shall be factory-set for Intelligent Control which uses "fuzzy logic" and "expert systems" methods. Proportional and Tunable PID shall also be user selectable options. Internal unit component control shall include the following:

Compressor Short Cycle Control
Prevents compressor short-cycling and needless compressor wear

System Auto Restart
The auto restart feature will automatically restart the system after a power failure. Time delay is programmable.

Sequential Load Activation
On initial startup or restart after power failure, each operational load is sequenced with a minimum of one second delay to minimize total inrush current.

Predictive Humidity Control
Calculates the moisture content in the room and prevents unnecessary humidification and dehumidification cycles by responding to changes in dew point temperature. The iCOM control shall be compatible with all Liebert remote monitoring and control devices. Options are available for BMS interface via MODbus, BACNet and SNMP. The iCOM control processor shall be microprocessor based with a 128x64 dot matrix graphic front monitor display and control keys for user inputs mounted in an ergonomic, aesthetically pleasing housing. The controls shall be menu driven. The display & housing shall be viewable while the unit panels are open or closed. The display shall be organized into three main sections: User Menus, Service Menus and Advanced Menus. The system shall display user menus for: active alarms, event log, graphic data, unit view/status overview (including the monitoring of room conditions, operational status in % of each function, date and time), total run hours, various sensors, display setup and service contacts. A password shall be required to make system changes within the service menus. Service menus shall include: setpoints, standby settings (lead/lag), timers/
sleep mode, alarm setup, sensor calibration, maintenance/wellness settings, options setup, system/network setup, auxiliary boards and diagnostics/service mode. A password shall be required to access the advanced menus.

User Menus Shall be Defined as Follows:

Active Alarms
Unit memory shall hold the 200 most recent alarms with time and date stamp for each alarm.

Event Log
Unit memory shall hold the 400 most recent events with id number, time and date stamp for each event.

Graphic Data View
Two graphic records shall be available: return air temperature and return air humidity.

Unit View - Status Overview
Simple or Graphical. Unit View summary displays shall include temperature and humidity values, active functions (and percent of operation) and any alarms of the host unit.

Total Run Hours
Menu shall display accumulative component operating hours for major components including compressors, fan motor, humidifier and reheat.

Display Setup
Customer shall pre-select the desired grouping of display languages at the time of the order from the following choices:

- Group 1: English, French, Italian, Spanish, German
- Group 2: English, Russian, Greek
- Group 3: English, Japanese, Chinese, Arabic

Service Contacts
Menu shall allow display of local service contact details.

Service Menus Shall be Defined as Follows:

Setpoints
Menu shall allow setpoints within the following ranges:

- Temperature Setpoint 18-29ºC (65-85ºF)*
- Temperature Sensitivity 0.6-5.6ºC (1-10ºF)
- Humidity Setpoint 20-80% RH*
- Humidity Sensitivity 1-30% RH
- High Temperature Alarm 2-32ºC (35-90ºF)
- Low Temperature Alarm 2-32ºC (35-90ºF)
- High Humidity Alarm 15-85% RH
- Low Humidity Alarm 15-85% RH

** The microprocessor may be set within these ranges, however the unit may not be able to control to extreme combinations of temperature and humidity.*

Standby Settings/Lead-Lag
Menu shall allow planned rotation or emergency rotation of operating and standby units.

Timers/Sleep Mode
Menu shall allow various customer settings for turning on/off unit.

Alarm Setup
Menu shall allow customer settings for alarm notification (audible/local/remote). The following alarms shall be available:

- High Temperature
- Low Temperature
- High Humidity
- Low Humidity
- Compressor Overload (Optional)
- Main Fan Overload (Optional)
- Humidifier Problem
- High Head Pressure
- Change Filter
- Fan Failure
- Low Suction Pressure
- Unit Off

Audible Alarm
The audible alarm shall annunciate any alarm that is enabled by the operator.

Common Alarm
A programmable common alarm shall be provided to interface user selected alarms with a remote alarm device.

Remote Monitoring
All alarms shall be communicated to the Liebert monitoring system with the following information: Date and time of occurrence, unit number and present temperature and humidity.

Sensor Calibration
Menu shall allow unit sensors to be calibrated with external sensors.

Maintenance/Wellness Settings
Menu shall allow reporting of potential component problems before they occur.

Options Setup
Menu shall provide operation settings for the installed components.

System/Network Setup
Menu shall allow Unit-to-Unit (U2U) communication and setup for teamwork modes of operation (up to 32 units).

Teamwork Modes of Operation
Saves energy by preventing operation of units in opposite modes multiple units.

Auxiliary Boards
Menu shall allow setup of optional expansion boards.

Diagnostics/Service Mode
Control input and output values and status shall be displayed to aid in unit diagnostics and troubleshooting. Control inputs shall be indicated as on or off at the front display. Control outputs shall be able to be turned on or off from the front display without using jumpers or a service terminal. Each control output shall be indicated by an LED on a circuit board.

Advanced Menus
Factory Settings
Configuration settings shall be factory-set based on the pre-defined component operation.

UNIT OPTIONS

iCOM Microprocessor Control With LARGE Graphic Display
The iCOM unit control with large graphic display shall include all of the features as the iCOM with small graphic display, except that it includes a larger graphical display and shall include the additional features of: "System View", Spare Parts List, Unit Diary.
The iCOM control processor shall be microprocessor based with a 320x240 dot matrix graphic front monitor display panel and control keys for user inputs mounted in an ergonomic, aesthetically pleasing housing.

System View - Status Overview
"System View" shall display a summary of operation for the total number of operating units within a Unit-to-Unit(U2U) configuration.

Spare Parts List
Menu shall include a list of critical spare parts, their quantity and part numbers.

Unit Diary
Menu shall include a free field area within the unit memory where unit history may be stored for reference.

iCOM Wall Mount LARGE Graphic Display
The iCOM Large Graphic Display Kit shall include an ergonomic, aesthetically pleasing housing, a 320x240 dot matrix graphic display and a 230V (120V) power supply. The Wall Mount Large Graphic Display shall be used to allow remote location of a "System View" display and all features of the Large Graphic User, Service and Advanced menus for use with Liebert iCOM controlled products connected for Unit-to-Unit (U2U) communications.

vNSA Network Switch
The vNSA network switch is designed to connect multiple iCOM equipped cooling units to form a network and allow the units to communicate and function as a team. Available with or without a Large Graphics Display, the vNSA can support up to 14 Small Graphics Display units. Supplied in a wall mount enclosure with key lock. Requires 100-240VAC single phase power.

IntelliSlot WEB Card
The Liebert IntelliSlot Web card provides HTTP browsing, SNMP and WEB-management capability of Liebert PEX units within your Network Management System (NMS).

IntelliSlot 485 Card
The Liebert IntelliSlot 485 card provides BMS management of Liebert PEX units over EIA-485 via Modbus RTU or Liebert's proprietary protocol for SiteLink connectivity.

iCOM Ethernet Cable
Certified CAT5e patch cable with fully moulded ends used for connecting an iCOM to a network switch. Available in lengths of 10, 15, 20, 30 and 45 metres (33, 50, 65, 100 and 150 feet). Bulk cable is also available in 305 metre (1000 feet) rolls.

iCOM Ethernet Crossover Cable
Certified CAT5e crossover cable with fully moulded ends for networking 2 Small Graphics Display iCOM units together are available in lengths of 10, 20 and 30 metres (33, 65 &100 feet).

Remote Air Cooled Condenser Power Kit - 1 & 2 Compressor
A 16 amp rated single pole circuit breaker and contactor shall be provided for each compressor circuit in the electrical panel for field connection to power the remote factory matched air cooled condensers.

Long Line Pipe Kit - Air Cooled Systems
A factory fitted liquid line solenoid valve and field installed non-return valve (supplied loose) shall be provided for each refrigeration circuit to prevent liquid refrigerant migration to the evaporator/compressor during off cycles in air cooled installations. *Note: Mandatory for pipe runs in excess of 30 metres.*

Condensate Pump - Infrared Humidifier equipped units
A factory wired and fitted condensate pump shall have a nominal capacity of 1625 l/hr (430 USGPH) at 3.2 m (10 ft.) head and be suitable for pumping 100°C (212°F) water. It shall be complete with integral dual-float switches, pump-and-motor assembly and reservoir. The secondary float shall send a signal to the local alarm and shut down the unit upon high water condition. The pump shall be located in the base of the unit.

Condensate Pump - Immersed Electrode Humidifier equipped units
The condensate pump shall have a nominal capacity of 1625 l/hr (430 USGPH) at 3.2 m (10 ft.) head and be suitable for pumping 100°C (212°F) water. It shall be complete with integral dual-float switches, pump-and motor assembly and reservoir. The secondary float shall send a signal to the local alarm and shut down the unit upon high water condition. The pump shall be supplied loose and be field installed external to the unit.

Stainless Steel Condensate Tray
A stainless steel condensate tray shall be provided for the evaporator coils in lieu of aluminium.

Ground Current Detector (Electric Heater)
A factory wired detector device shall inhibit electric heater operation in the event that a heater element shorts to ground.

Reheat/Humidifier Lockout (Emergency Power Lockout)
A field supplied 24VAC source to field wiring terminals in the electrical panel will lockout the electric heaters and humidifier.

Common Alarm Terminals (Additional)
A total of three (3) common alarm terminals (normally open) rated at 24VAC 3 amps each shall provide remote alarm indication.

Phase Fault Relay
The unit shall shutdown upon detection of a loss of any phase and report an alarm.

Main Fan Auxiliary Contact
Dry contact terminals (normally open) shall provide remote status indication for the main fan(s).

Water Under Floor Sensor (LWD)
Additional water under floor sensors (up to 5 in total) may be series connected under the raised floor. *Note: each unit is shipped with one (1) off LWD sensor and 3.7m (12 feet) lead as standard.*

Liquitect Unit Shutdown Sensor (LT410)
Liquitect signal shuts down unit, and provides one (1) N/O contact for field alarm connection.

Low Pressure Transducer(s)
Replaces the standard pressure switch to indicate refrigerant suction pressure(s) via the iCOM display panel.

High Temp Sensor
A separate sensor shall sense return air temperature and shut down the unit if temperature reaches 51.7°C (125°F). *Note: This device is not meant to replace any fire detection system that may be required by local or national codes.*

Smoke Sensor

A smoke sensor monitors the return air, shuts down the unit upon detection, and sends a visual and audible alarm. Dry contacts are available for a remote customer alarm. The smoke sensor includes a 'supervisory' contact closure. *Note: This smoke sensor is not intended to function as or replace any room smoke detection system that may be required by local or national codes.*

Remote Sensors

Remote temperature and humidity sensor compatible with iCOM controls are available in lengths of 9, 18, 27, 36 and 45 metres (30, 60, 90, 120 and 150 feet).

Floor Stand

The floor stand shall be constructed from welded galvanised steel. The floor stand shall have adjustable legs and be _____ mm (in.) high.

Upflow Unit Plenum with Discharge Grille(s)

The air plenum shall be constructed from 1.2mm zinc coated sheet steel and powder coated in Charcoal Grey colour with a textured finish. The plenum shall be 550 mm (21.7 in.) high. Double deflection discharge grilles shall be fitted to the front panels and be made from aluminium with an anodised finish.

Detailed Technical Specification

PEX Downflow and Upflow Units — **Air/Water/Glycol Cooled 50Hz**

Model Size	1020	1025	1030	1035	2045	2055	2040	2050	2060	2070	3080	3090	3100
Rated Unit Performance R-22 and R-407C (1)													**Downflow Units**
24°C DB, 17.1°C WB (75.2°F DB, 62.8°F WB) 50% RH													
Total kW	20.0	23.1	30.1	33.1	45.0	53.2	41.0	46.4	60.6	66.9	81.4	89.3	100.0
BTUH	68,200	78,800	102,700	112,900	153,500	181,500	139,900	158,300	206,800	228,300	277,700	304,700	341,200
Sensible kW	18.9	21.5	26.6	29.4	41.7	47.3	38.5	43.2	53.4	59.0	71.3	79.7	88.4
BTUH	64,500	73,400	90,800	100,300	142,300	161,400	131,400	147,400	182,200	201,300	243,300	271,900	301,600
24°C DB, 16.3°C WB (75.2°F DB, 61.3°F WB) 45% RH													
Total kW	20.0	22.6	28.7	31.8	44.7	51.6	41.1	45.9	57.9	64.6	78.4	85.2	98.0
BTUH	68,200	77,100	97,900	108,500	152,500	176,100	140,200	156,600	197,600	220,400	267,500	290,700	334,400
Sensible kW	19.8	22.4	28.1	31.2	44.4	50.4	40.7	45.5	56.6	62.7	75.5	84.2	94.5
BTUH	67,600	76,400	95,900	106,500	151,500	172,000	138,900	155,200	193,100	213,900	257,600	287,300	322,400
Rated Unit Performance R-22 and R-407C (1)													**Upflow Units**
24°C DB, 17.1°C WB (75.2°F DB, 62.8°F WB) 50% RH													
Total kW	19.4	22.1	29.2	32.4	44.4	52.0	39.5	45.7	57.9	65.9	79.4	87.2	97.9
BTUH	66,200	75,400	99,600	110,500	151,500	177,400	134,800	155,900	197,600	224,900	270,900	297,500	334,000
Sensible kW	18.3	20.7	25.9	28.0	40.7	46.1	37.2	42.0	51.6	56.3	69.2	77.5	83.9
BTUH	62,400	70,600	88,400	95,500	138,900	157,300	126,900	143,300	176,100	192,100	236,100	264,400	286,300
24°C DB, 16.3°C WB (75.2°F DB, 61.3°F WB) 45% RH													
Total kW	19.3	21.9	28.1	31.8	43.0	49.7	39.8	44.5	56.5	63.5	76.7	83.5	96.6
BTUH	65,900	74,700	95,900	108,500	146,700	169,600	135,800	151,800	192,800	216,700	261,700	284,900	329,600
Sensible kW	19.1	21.7	27.4	29.9	42.6	48.8	39.5	44.2	55.1	59.7	73.5	82.2	89.9
BTUH	65,200	74,000	93,500	102,000	145,400	166,500	134,800	150,800	188,000	203,700	250,800	280,500	306,700
Standard Evaporator Fan - Forward curve centrifugal fan, induction motor, self-tensioning belt drive													
Size	12-12												
No. of fan assemblies	1	1	1	1	2	2	2	2	2	2	3	3	3
Static Regain duct	Downflow Units												
Std. Motor - kw (HP)	2.2 (3.0)												
Opt. Motor - kw (HP)	3.0 (4.0)												
Downflow Airflow - l/s	1,575	1,850	2,300	2,275	3,400	3,800	3,050	3,600	4,500	4,450	5,600	6,650	6,600
CFM	3,340	3,930	4,880	4,830	7,220	8,070	6,480	7,640	9,550	9,450	11,890	14,120	14,010
Upflow Airflow - l/s	1,500	1,750	2,185	2,200	3,225	3,620	2,900	3,400	4,275	4,300	5,330	6,325	6,350
CFM	3,180	3,720	4,640	4,670	6,850	7,690	6,160	7,220	9,080	9,130	11,320	13,430	13,480
Optional Evaporator Fan - Backward curve centrifugal fan, EC motor, direct drive													
Size	560												
No. of fan assemblies	1	1	1	1	2	2	2	2	2	2	3	3	3
Motor kw (HP)	2.3 (3.1)												
Evaporator Coil - Copper tubes with rifled bore tubes, louvred aluminium fins													
No. of rows	3	3	3	4	3	3	3	3	3	4	3	3	4
Fin series - FPM	551	551	551	512	551	551	551	551	551	512	551	551	512
FPI	14	14	14	13	14	14	14	14	14	13	14	14	13
Compressor - Copeland Compliant Scroll with Crankcase Heater													
No. of compressors	1	1	1	1	1	1	2	2	2	2	2	2	2
Unit cooling steps	2	2	2	2	2	2	2	2	2	2	2	2	2
Safety controls - kPa	LP cutout/in (auto reset) 140/420, HP cutout (manual reset) 2800												
psig	LP cutout/in (auto reset) 20/60, HP cutout (manual reset) 400												
Standard Humidifier - Infrared with Autoflush													
Capacity - kg/h	4.5	4.5	4.5	4.5	10	10	10	10	10	10	10	10	10
lb./hr	10	10	10	10	22	22	22	22	22	22	22	22	22
Input power - kW	4.8	4.8	4.8	4.8	9.6	9.6	9.6	9.6	9.6	9.6	9.6	9.6	9.6
Optional Humidifier - Immersed Electrode, Cleanable													
Capacity - kg/h	4.5	4.5	4.5	4.5	5	7.5	5	5	7.5	7.5	10	10	10
lb./hr	10	10	10	10	11	17	11	11	17	17	22	22	22
Input power - kW	3.3	3.3	3.3	3.3	3.8	5.6	3.8	3.8	5.6	5.6	7.5	7.5	7.5

PEX Downflow and Upflow Units — Air/Water/Glycol Cooled 50Hz

Model Size	1020	1025	1030	1035	2045	2055	2040	2050	2060	2070	3080	3090	3100
Reheat - Single stage, low watt density, 304 Stainless Steel fin tubular electric elements													
Capacity - kW	6	6	6	6	10	10	6	6	10	10	10	10	10
Opt. 2nd stage - kW	6	6	6	6	10	10	6	6	10	10	10	10	10
Filter - Dry media disposable G4 to AS/NZS1324.1 (MERV 8 to ASHRAE 52.2)													
Downflow - mm (in)	785x785x100 (31x31x4) nominal												
Qty	1	1	1	1	2	2	2	2	2	2	3	3	3
Upflow - mm (in)	650x785x100 (25.5x31x4) nominal												
Qty	1	1	1	1	2	2	2	2	2	2	3	3	3
Full Load Current - 400 Volts, 3 phase+N+E, 50 Hz Supply (2)													
Standard Unit - Amps	23.1	25.2	30.4	32.3	48.5	53.5	42.9	47.1	57.5	61.3	71.9	77.7	87.7
Water Cooled Condenser - 316SS Brazed Plate Heat Exchanger - 2 Way (3)													
Valve Size	1"	1"	1-1/4"	1-1/4"	1-1/4"	1-1/4"	1"	1"	1-1/4"	1-1/4"	1-1/4"	1-1/4"	1-1/4"
Water — Flow (4) - l/s	1.07	1.23	1.60	1.79	2.40	2.88	2.18	2.46	3.22	3.58	4.34	4.76	5.50
Water — GPM	17.0	19.5	25.4	28.4	38.0	45.7	34.6	39.0	51.0	56.8	68.8	75.5	87.2
Water — PD - kPa	65	54	52	46	71	78	38	52	60	46	59	70	71
Water — ft. H_2O	21.9	18.0	17.4	15.4	23.7	26.1	12.7	17.4	20.0	15.4	19.7	23.4	23.7
40% EG v/v — Flow (4) - l/s	1.27	1.46	1.89	2.15	2.84	3.41	2.58	2.92	3.82	4.24	5.14	5.64	6.52
40% EG v/v — GPM	20.1	23.1	30.0	34.1	45.0	54.1	40.9	46.3	60.6	67.2	81.5	89.4	103.4
40% EG v/v — PD - kPa	82	59	60	58	71	75	40	57	73	57	73	71	69
40% EG v/v — ft. H_2O	27.4	19.7	20.1	19.4	23.7	25.1	13.4	19.1	24.4	19.1	24.4	23.7	23.1
Unit Connections													
A — Hot Gas - O.D.	5/8"	7/8"	7/8"	7/8"	7/8"	7/8"	5/8"	7/8"	7/8"	7/8"	7/8"	7/8"	7/8"
A — Qty	1	1	1	1	1	1	2	2	2	2	2	2	2
A — Liquid - O.D.	5/8"	5/8"	5/8"	5/8"	5/8"	5/8"	5/8"	5/8"	5/8"	5/8"	5/8"	5/8"	5/8"
A — Qty	1	1	1	1	1	1	2	2	2	2	2	2	2
W/G — Supply - I.D.	1-1/8"	1-1/8"	1-3/8"	1-3/8"	1-1/4"	1-1/4"	1-1/8"	1-1/8"	1-3/8"	1-3/8"	1-3/8"	1-1/4"	1-1/4"
W/G — Qty	1	1	1	1	1	2	2	2	2	2	2	2	2
W/G — Return - O.D.	1-1/4"	1-1/4"	1-1/4"	1-1/4"	1-1/4"	1-1/4"	1-1/4"	1-1/4"	1-1/4"	1-1/4"	1-1/4"	1-1/4"	1-1/4"
W/G — Qty	1	1	1	1	1	2	2	2	2	2	2	2	2
IE Hum. Drain - O.D.	25	25	25	25	25	25	25	25	25	25	25	25	25
IR Hum. Drain - FPT	3/4"	3/4"	3/4"	3/4"	3/4"	3/4"	3/4"	3/4"	3/4"	3/4"	3/4"	3/4"	3/4"
Hum. Supply - BSP	1/2"	1/2"	1/2"	1/2"	1/2"	1/2"	1/2"	1/2"	1/2"	1/2"	1/2"	1/2"	1/2"
Unit Dimensions & Weight													
Width - mm	853	853	853	853	1704	1704	1704	1704	1704	1704	2553	2553	2553
in.	34	34	34	34	67	67	67	67	67	67	101	101	101
Depth - mm	874	874	874	874	874	874	874	874	874	874	874	874	874
in.	34.4	34.4	34.4	34.4	34.4	34.4	34.4	34.4	34.4	34.4	34.4	34.4	34.4
Height - mm	1970	1970	1970	1970	1970	1970	1970	1970	1970	1970	1970	1970	1970
in.	78	78	78	78	78	78	78	78	78	78	78	78	78
Weight - kg	320	330	340	350	560	570	590	610	640	650	910	930	950
lbs	704	726	748	770	1232	1254	1298	1342	1408	1430	2002	2046	2090
Unit Footprint													
Unit only - m^2	0.75	0.75	0.75	0.75	1.49	1.49	1.49	1.49	1.49	1.49	2.23	2.23	2.23
ft^2	8.0	8.0	8.0	8.0	16.0	16.0	16.0	16.0	16.0	16.0	24.0	24.0	24.0
Incl. Service area - m^2	1.47	1.47	1.47	1.47	2.94	2.94	2.94	2.94	2.94	2.94	4.40	4.40	4.40
ft^2	15.8	15.8	15.8	15.8	31.6	31.6	31.6	31.6	31.6	31.6	47.4	47.4	47.4
Serv. Access - mm (in)	850 (33.5) front only												

NOTES:

(1) All capacities are nominal values. Gross capacity based on 45°C (113°F) mid-point condensing temperature, Downflow/Upflow 25Pa (0.1" H2O) ESP, Upflow Ducted 100Pa (0.4" H2O) ESP, 0m a.s.l. For net capacities, deduct fan input power. Refer Liebert Rating Program for specific input conditions. Refer to the Air Cooled Condenser technical manual for condenser selections.

(2) Input power supply +/-15%. FLA excludes heat rejection equipment. Refer IOM for electrical data on optional equipment.

(3) Standard pressure water regulating valve (WRV) 1,000 kPa. Optional 3 way high pressure WRV (2,400 kPa) available.

(4) Nominal flow & pressure drop figures are for total unit. Based upon 24°CDB/50%RH, 30°C EWT & 35.5°C LWT, R22 refrigerant

PEX Downflow and Upflow Units — Chilled Water 50Hz

Model	Downflow	1020	1030	1040	2050	2070	2090	N/A	3110	3140
Size	Upflow	1020	1030	N/A	2050	2070	N/A	3080	3110	N/A

Rated Unit Performance (1)									Downflow Units
24°C DB, 17.1°C WB (75.2°F DB, 62.8°F WB) 50% RH									
Based on 7°C (44.6°F) EWT, 12.5°C (54.5°F) LWT									
Total kW	28.8	35.5	45.5	60.9	76.9	97.6		116.8	150.5
BTUH	98,300	121,100	155,200	207,800	262,400	333,000		398,500	513,500
Sensible kW	23.1	29.9	35.3	47.7	62.8	74.0		95.0	112.7
BTUH	78,800	102,000	120,400	162,800	214,300	252,500	n/a	324,100	384,500
Flow - l/s	1.25	1.54	1.98	2.64	3.34	4.24		5.07	6.54
GPM	19.8	24.4	31.4	41.8	52.9	67.2		80.4	103.7
Pressure Drop - kPa	64	94	83	65	100	143		104	187
ft. H_2O	21.4	31.5	27.8	21.8	33.5	47.9		34.8	62.6
24°C DB, 16.3°C WB (75.2°F DB, 61.3°F WB) 45% RH									
Based on 7°C (44.6°F) EWT, 12.5°C (54.5°F) LWT									
Total kW	25.4	31.5	40.6	54.2	67.9	87.2		103.1	134.7
BTUH	86,700	107,500	138,500	184,900	231,700	297,500		351,800	459,600
Sensible kW	23.4	30.5	35.7	48.3	64.0	74.8		96.7	113.9
BTUH	79,800	104,100	121,800	164,800	218,400	255,200	n/a	329,900	388,600
Flow - l/s	1.10	1.37	1.76	2.35	2.95	3.79		4.48	5.85
GPM	17.4	21.7	27.9	37.3	46.8	60.1		71.0	92.7
Pressure Drop - kPa	50	76	67	52	79	116		83	152
ft. H_2O	16.8	25.5	22.4	17.4	26.5	38.9		27.8	50.9

24°C DB, 17.1°C WB (75.2°F DB, 62.8°F WB) 50% RH									**Upflow Units**
Based on 7°C (44.6°F) EWT, 12.5°C (54.5°F) LWT									
Total kW	27.8	35.1		59.2	74.8		89.3	113.5	
BTUH	94,900	119,800		202,000	255,200		304,700	387,300	
Sensible kW	22.3	29.4		45.9	60.8		69.4	91.9	
BTUH	76,100	100,300	n/a	156,600	207,400	n/a	236,800	313,600	n/a
Flow - l/s	1.21	1.53		2.57	3.25		3.88	4.93	
GPM	19.2	24.3		40.7	51.5		61.5	78.2	
Pressure Drop - kPa	59	93		62	95		64	99	
ft. H_2O	19.8	31.2		20.8	31.8		21.4	33.2	
24°C DB, 16.3°C WB (75.2°F DB, 61.3°F WB) 45% RH									
Based on 7°C (44.6°F) EWT, 12.5°C (54.5°F) LWT									
Total kW	24.6	30.9		52.5	66.5		79.5	101.0	
BTUH	83,900	105,400		179,100	226,900		271,300	344,600	
Sensible kW	22.6	30.0		46.5	61.9		70.2	93.5	
BTUH	77,100	102,400	n/a	158,700	211,200	n/a	239,500	319,000	n/a
Flow - l/s	1.07	1.34		2.28	2.89		3.45	4.38	
GPM	17.0	21.2		36.1	45.8		54.7	69.4	
Pressure Drop - kPa	47	72		49	77		51	80	
ft. H_2O	15.7	24.1		16.4	25.8		17.1	26.8	

Standard Evaporator Fan - Forward curve centrifugal fan, induction motor, self-tensioning belt drive									
Size	15-15								
No. of fan assemblies	1	1	1	2	2	2	3	3	3
Static Regain duct	Downflow Units								
Std. Motor - kw (HP)	2.2 (3.0)								
Opt. Motor - kw (HP)	3.0 (4.0)								
Downflow Airflow - l/s	1,625	2,300	2,300	3,225	4,650	4,650	n/a	6,950	6,950
CFM	3,450	4,880	4,880	6,850	9,870	9,870	n/a	14,760	14,760
Upflow Airflow - l/s	1,550	2,250	n/a	3,075	4,450	n/a	4,600	6,650	n/a
CFM	3,290	4,780	n/a	6,530	9,450	n/a	9,770	14,120	n/a

Optional Evaporator Fan - Backward curve centrifugal fan, EC motor, direct drive									
Size	560								
No. of fan assemblies	1	1	1	2	2	2	3	3	3
Motor kw (HP)	2.3 (3.1)								

PEX Downflow and Upflow Units — Chilled Water 50Hz

Model Size	Downflow	1020	1030	1040	2050	2070	2090	N/A	3110	3140
	Upflow	1020	1030	N/A	2050	2070	N/A	3080	3110	N/A
Evaporator Coil - Copper tubes, louvred aluminium fins										
No. of rows		4	4	5	4	4	5	4	4	5
Fin series - FPM		551	551	551	551	551	551	551	551	551
FPI		14	14	14	14	14	14	14	14	14
Chilled Water Valve - 2 Way Ball Valve, PN40 Body with Motorised Actuator (2)										
Action		Modulating								
Size - mm		DN15x2	DN20x2	DN20x2	DN20x2	DN25x2	DN25x2	DN25x2	DN32x2	DN40x2
Control Port, K_v (C_v)		4(4.6)	4(4.6)	6.3(7.3)	10(11.6)	10(11.6)	10(11.6)	16(18.6)	16(18.6)	16(18.6)
Close Off - kPa (psig)		1380 (200)								
Standard Humidifier - Infrared with Autoflush										
Capacity - kg/h		4.5	4.5	4.5	10	10	10	10	10	10
lb./hr		10	10	10	22	22	22	22	22	22
Input power - kW		4.8	4.8	4.8	9.6	9.6	9.6	9.6	9.6	9.6
Optional Humidifier - Immersed Electrode, Cleanable										
Capacity - kg/h		4.5	4.5	4.5	7.5	7.5	7.5	10	10	10
lb./hr		10	10	10	17	17	17	22	22	22
Input power - kW		3.3	3.3	3.3	5.6	5.6	5.6	7.5	7.5	7.5
Reheat - Single stage, low watt density, 304 Stainless Steel fin tubular electric elements										
Capacity - kW		6	6	6	10	10	10	10	10	10
Opt. 2nd stage - kW		6	6	6	10	10	10	10	10	10
Filter - Dry media disposable G4 to AS/NZS1324.1 (MERV 8 to ASHRAE 52.2)										
Downflow - mm (in)		785x785x100 (31x31x4) nominal								
Qty		1	1	1	2	2	2	3	3	3
Upflow - mm (in)		650x785x100 (25.5x31x4) nominal								
Qty		1	1	1	2	2	2	3	3	3
Full Load Current - 400 Volts, 3 phase+N+E, 50 Hz Supply (3)										
Standard Unit - Amps		13.1	13.1	13.1	23.5	23.5	23.5	28.2	28.2	28.2
Unit Connections										
Supply - O.D. Cu		1-1/4"	1-1/4"	1-1/4"	1-5/8"	1-5/8"	1-5/8"	2"	2"	2"
Return - O.D. Cu		1-1/4"	1-1/4"	1-1/4"	1-5/8"	1-5/8"	1-5/8"	2"	2"	2"
IE Hum. Drain - O.D.		25	25	25	25	25	25	25	25	25
IR Hum. Drain - FPT		3/4"	3/4"	3/4"	3/4"	3/4"	3/4"	3/4"	3/4"	3/4"
Hum. Supply - BSP		1/2"	1/2"	1/2"	1/2"	1/2"	1/2"	1/2"	1/2"	1/2"
Unit Dimensions & Weight										
Width - mm		853	853	853	1704	1704	1704	2553	2553	2553
in.		34	34	34	67	67	67	101	101	101
Depth - mm		874	874	874	874	874	874	874	874	874
in.		34.4	34.4	34.4	34.4	34.4	34.4	34.4	34.4	34.4
Height - mm		1970	1970	1970	1970	1970	1970	1970	1970	1970
in.		78	78	78	78	78	78	78	78	78
Weight - kg		260	260	270	480	480	500	730	730	760
lbs		572	572	594	1056	1056	1100	1606	1606	1672
Unit Footprint										
Unit only - m^2		0.75	0.75	0.75	1.49	1.49	1.49	2.23	2.23	2.23
ft^2		8.0	8.0	8.0	16.0	16.0	16.0	24.0	24.0	24.0
Incl. Service area - m^2		1.47	1.47	1.47	2.94	2.94	2.94	4.40	4.40	4.40
ft^2		15.8	15.8	15.8	31.6	31.6	31.6	47.4	47.4	47.4
Serv. Access - mm (in)		850 (33.5) front only								

NOTES:

(1) All capacities are nominal values. Gross capacity based on 25Pa (0.1" H2O) ESP, Downflow/Upflow 25Pa (0.1" H2O) ESP, Upflow Ducted 100Pa (0.4" H2O) ESP, 0m a.s.l. For net capacities, deduct fan input power. Refer Liebert Rating Program for specific input conditions.

(2) Standard pressure chilled water valve body rating PN40 (4,000 kPa). Optional 3 way available.

(3) Input power supply +/-15%. FLA based on standard evaporator fan and humidifier lockout during reheat operation. Refer IOM for electrical data on optional equipment.

Submittal Drawings

Unit Dimensions & Service Access

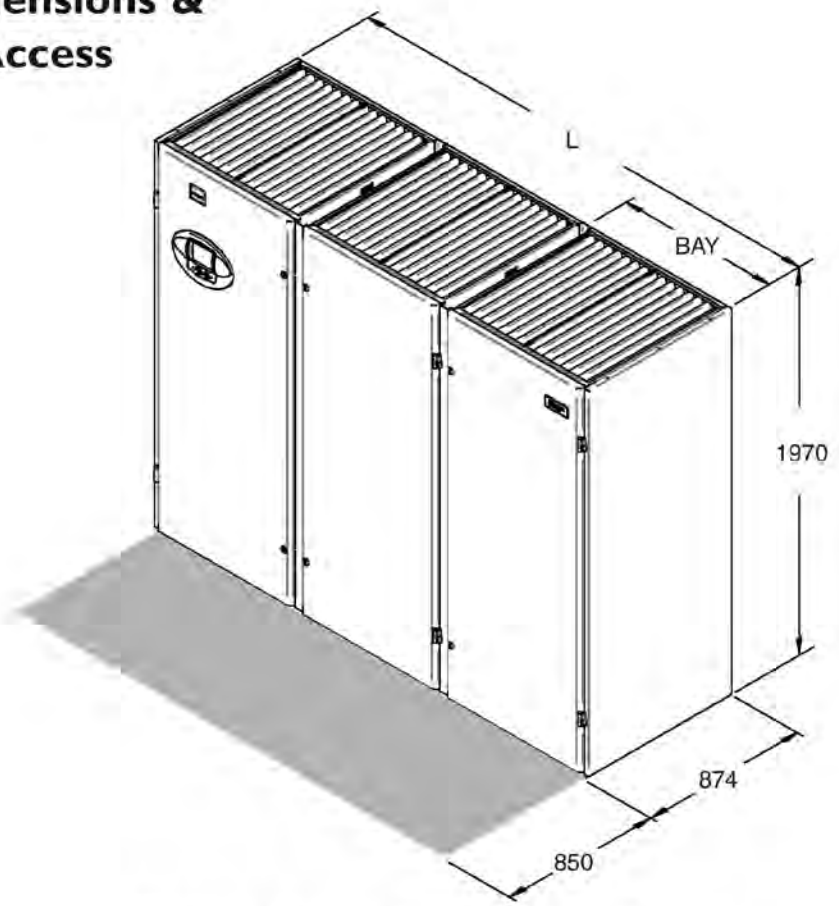

PEX Large Frame - Downflow Unit (Type F)
FOR RAISED FLOOR APPLICATIONS

Bays	Model		Width
	FA/W/G	FC	L (mm)
1	1020	1020	853
1	1025	1030	853
1	1030	1040	853
1	1035	-	853
2	2045	-	1704
2	2055	-	1704
2	2040	-	1704
2	2050	2050	1704
2	2060	2070	1704
2	2070	2090	1704
3	3080	-	2553
3	3090	3110	2553
3	3100	3140	2553

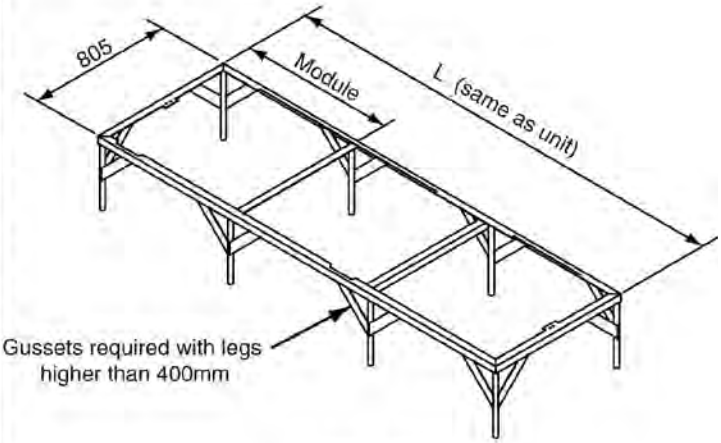

FLOORSTAND
(Optional)

Unit Dimensions & Service Access

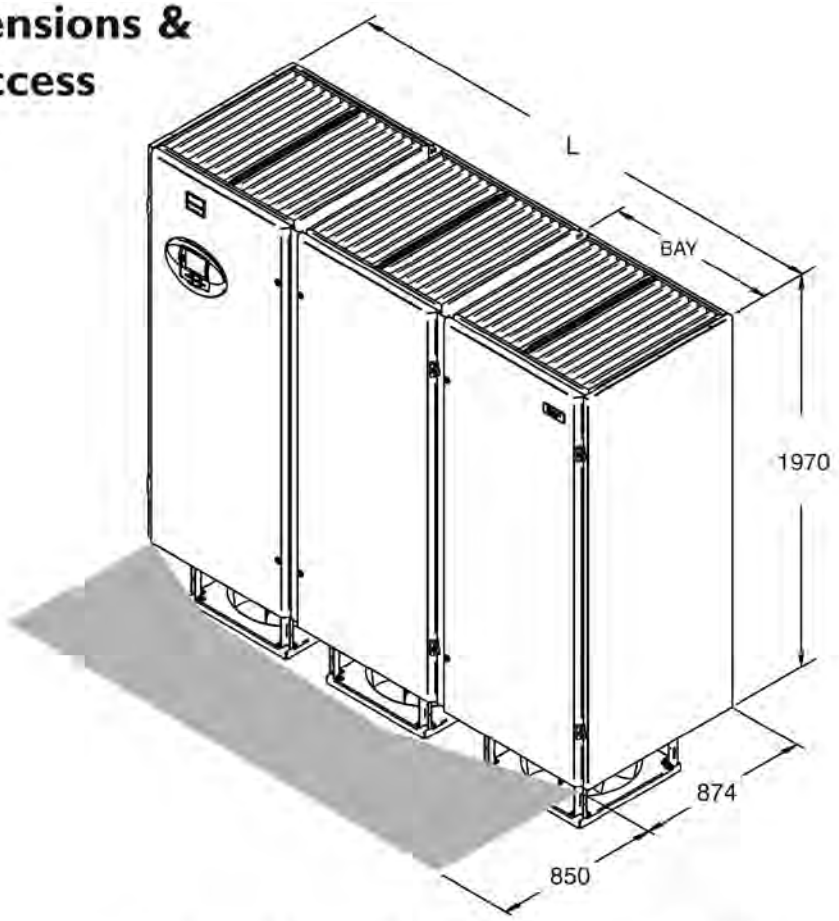

PEX Large Frame - Downflow Unit (Type G)
FOR RAISED FLOOR APPLICATIONS
(400mm minimum raised floor height required)

Bays	Model	Width
	GC	L (mm)
1	1020	853
1	1030	853
1	1040	853
1	-	853
2	-	1704
2	-	1704
2	-	1704
2	2050	1704
2	2070	1704
2	2090	1704
3	-	2553
3	3110	2553
3	3140	2553

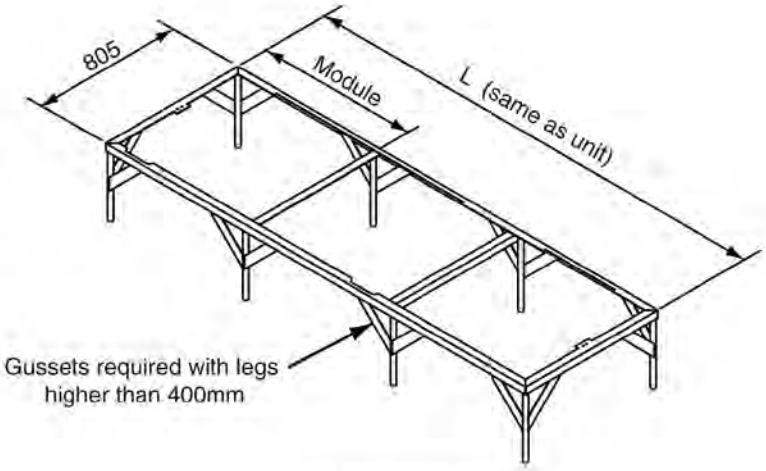

FLOORSTAND
(Optional)

Unit Dimensions & Service Access

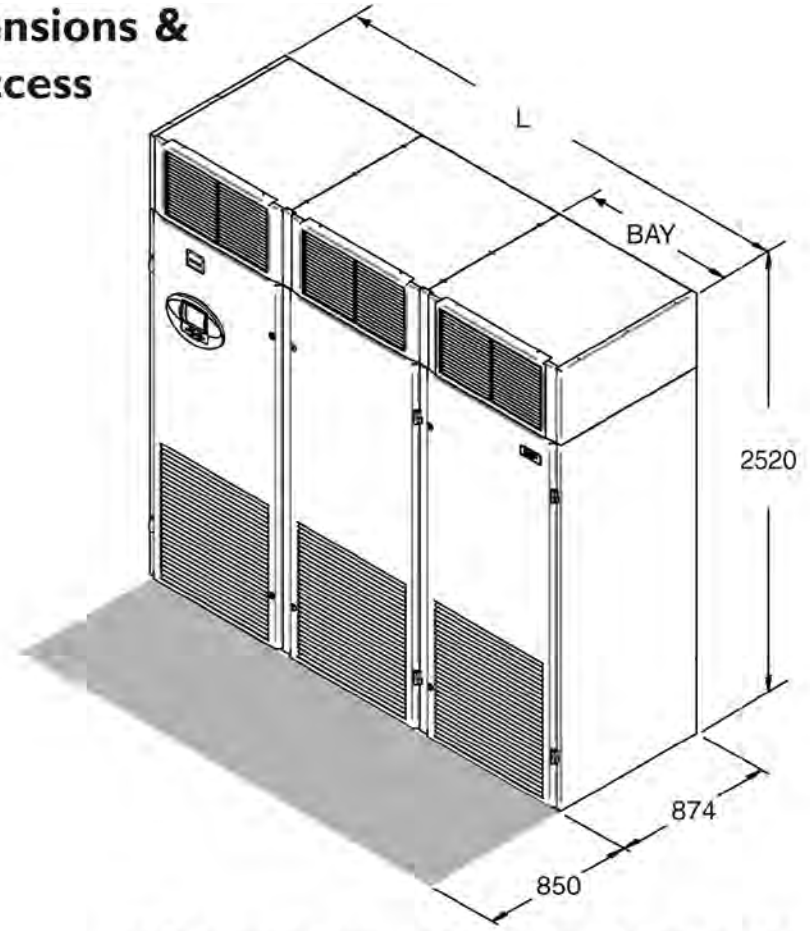

PEX Large Frame - Upflow Unit (Type U &V)
FOR PLENUM APPLICATIONS
(550mm high plenum shown is optional)

Bays	Model		Width
	UA/W/G VA/W/G	UC VC	L (mm)
1	1020	1020	853
1	1025	-	853
1	1030	1030	853
1	1035	-	853
2	2045	-	1704
2	2055	-	1704
2	2040	-	1704
2	2050	2050	1704
2	2060	-	1704
2	2070	2070	1704
3	3080	3080	2553
3	3090	-	2553
3	3100	3110	2553

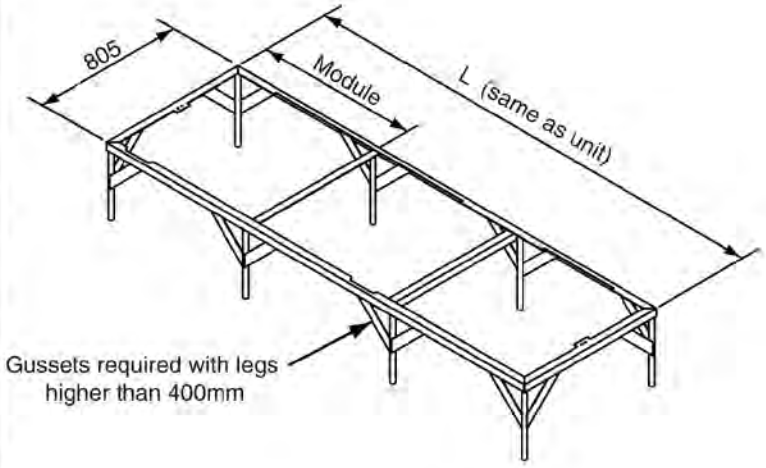

FLOORSTAND
(Optional)

Unit Dimensions & Service Access

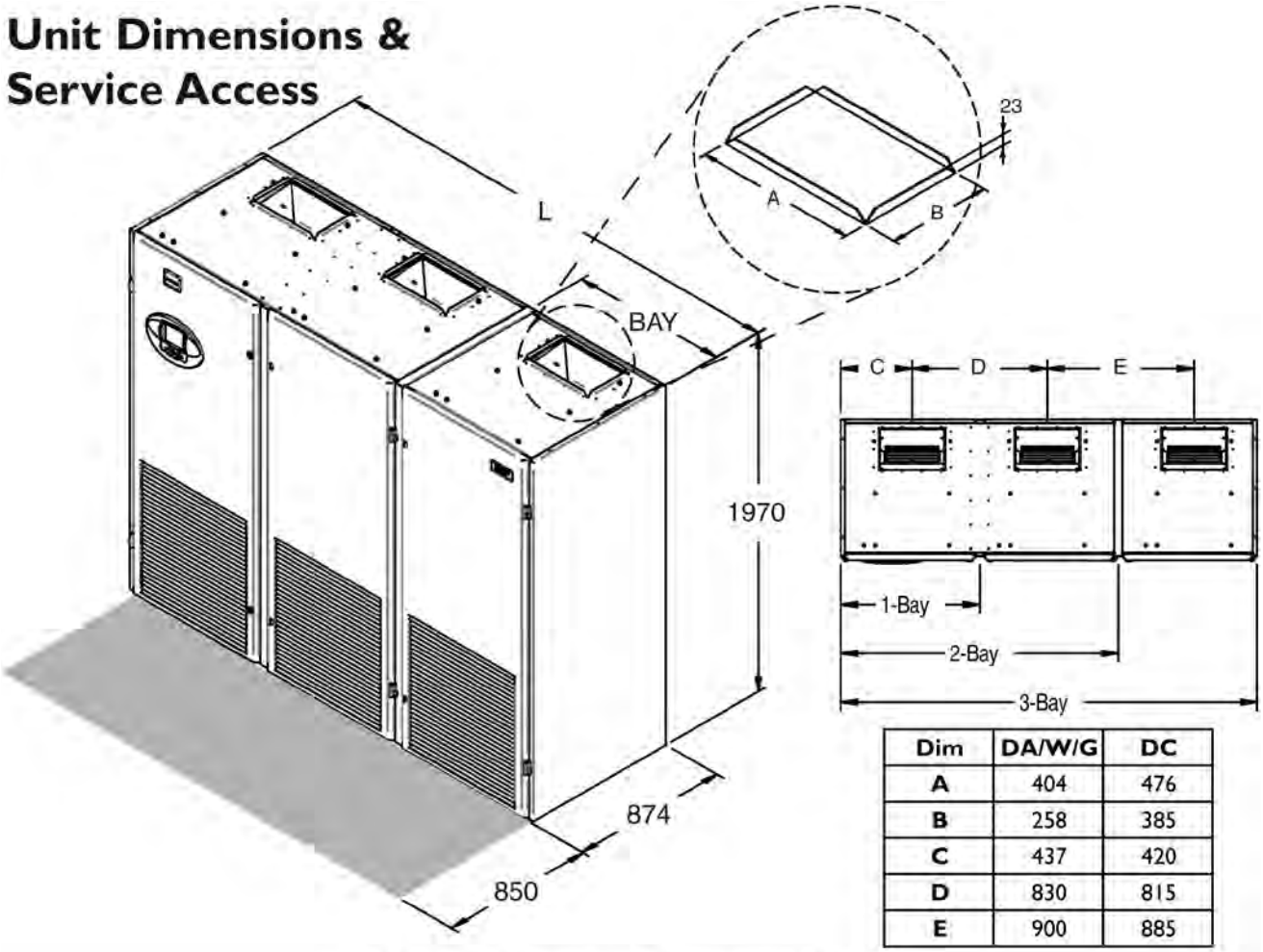

Dim	DA/W/G	DC
A	404	476
B	258	385
C	437	420
D	830	815
E	900	885

PEX Large Frame - Upflow Unit (Type D)

FOR DUCTED APPLICATIONS

Bays	Model		Width
	DA/W/G	DC	L (mm)
1	1020	1020	853
1	1025	-	853
1	1030	1030	853
1	1035	-	853
2	2045	-	1704
2	2055	-	1704
2	2040	-	1704
2	2050	2050	1704
2	2060	-	1704
2	2070	2070	1704
3	3080	3080	2553
3	3090	-	2553
3	3100	3110	2553

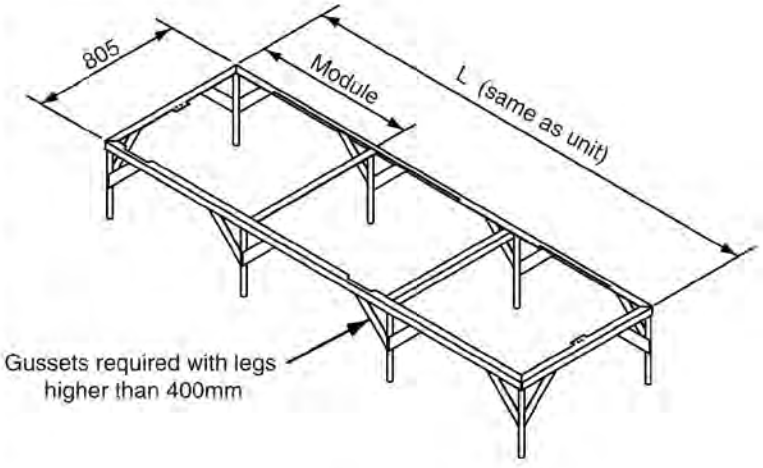

FLOORSTAND
(Optional)

Unit Dimensions & Service Access

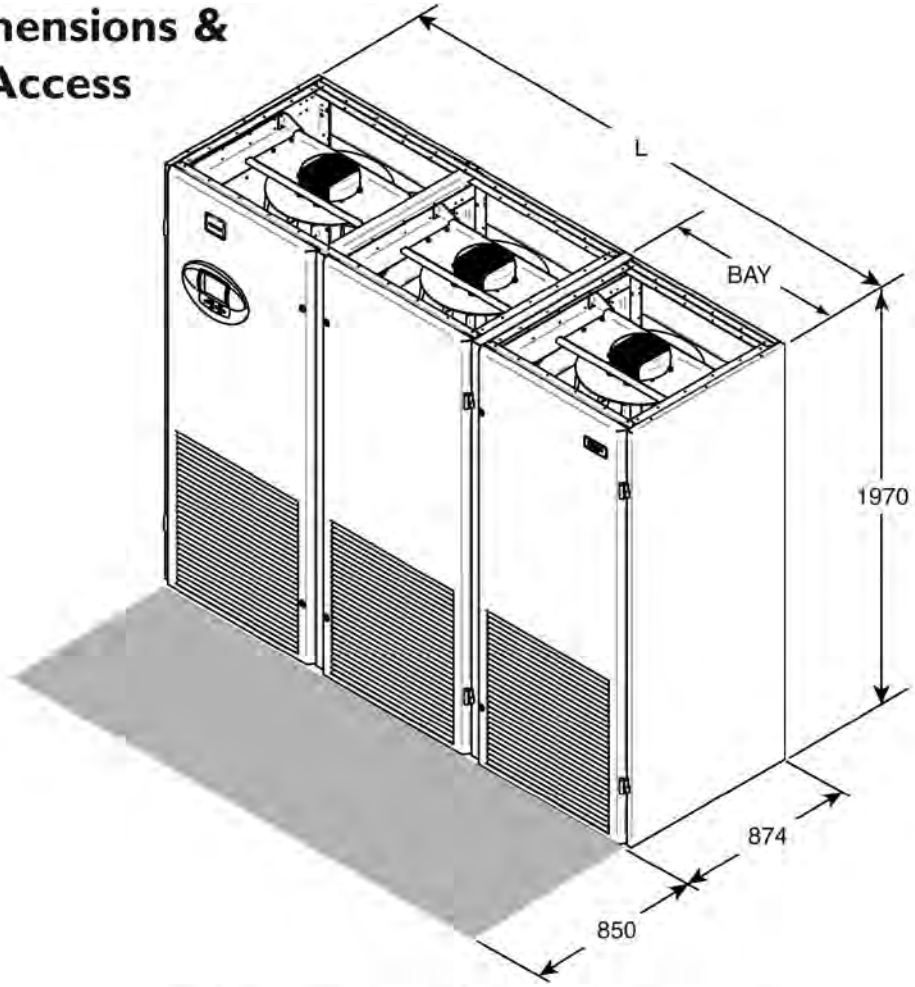

PEX Large Frame - Upflow Unit (Type V)
FOR DUCTED APPLICATIONS

Bays	Model	Width
	VC	L (mm)
1	1020	853
1	-	853
1	1030	853
1	-	853
2	-	1704
2	-	1704
2	-	1704
2	2050	1704
2	-	1704
2	2070	1704
3	3080	2553
3	-	2553
3	3110	2553

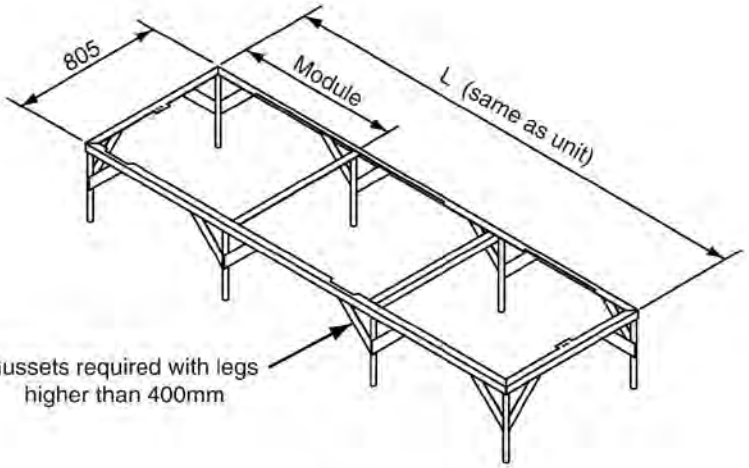

FLOORSTAND
(Optional)

Liebert® PEX
R410A Series

Product overview

The Liebert PEX R410A series air conditioner is the new generation precision air conditioning system from Emerson Network Power. The Liebert PEX R410A series air conditioner is the very latest in a long line of advanced products from the Liebert family designed to support business-critical applications.

The Liebert PEX R410A series air conditioner features high reliability, high sensible heat ratio and large airflow. It is configured with an infrared humidifier adjustable to different water qualities, and uses R410A green refrigerant to meet the international requirement. At the same time, there are three types of power applications in this series of units: 400V/3N ~ /50Hz, 380V/3N ~ /60Hz and 460V/3 ~ /60Hz, and they meet different market needs better.



Meeting Precision Cooling requirements

Only the Liebert PEX R410A series air conditioner can give you all these advantages:

- Comprehensive local support. - A 24/7 full pre-sales and post-sales support anytime
- Customization expertise - Liebert PEX R410A series air conditioner units can be customized to suit requirements, with support coming from highly skilled local Engineering teams.
- Full Service capability - Factory-trained Customer Service Engineers provide backup support 24 hours a day and 365 days a year.
- Established company - Emerson Network Power has been designing and manufacturing precision environmental control systems for over 45 years.

The Liebert PEX R410A series variants:

Liebert PEX R410A series Downflow unit features:

- FC Forward Curve fans for legacy applications
- EC Backward Curve fans with in-floor operation which is the optimum position for energy efficient performance
- The fans are serviceable and removable from the front of the units above the raised floor whilst the EC fan models are supplied with a lifting/lowering device for start up & service access

Liebert PEX R410A series Upflow unit features:

- FC Forward Curve fans
- EC Backward Curve fans
- The fans are serviceable and removable from the front of the unit

Liebert PEX R410A series units are specifically developed for applications requiring close environmental control:

- Data Centers
- Telecom/CATV
- Computer Rooms
- Labs and Test Rooms
- Network Centers
- Production Facilities



iCOM - Intelligent Communications and Monitoring

The Liebert iCOM™ control system offers the highest capabilities of unit control, communication and monitoring of Liebert mission-critical cooling units. Liebert iCOM provides advanced diagnostic and maintenance support, enabling multiple units to communicate and work together as a team to precisely control temperature and humidity across a room. The Liebert iCOM have two kinds of screen display: a standard display and a large display. (see Fig. 1-6)

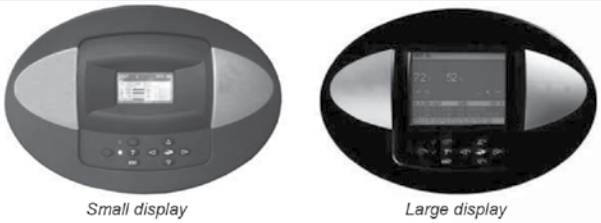

Figure 1-6 iCOM display

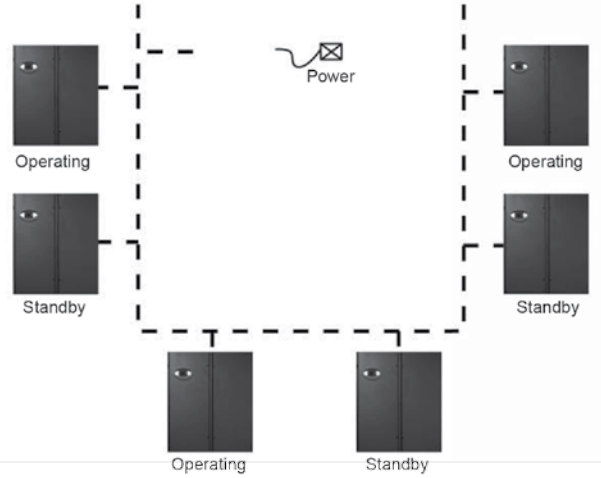

A-Frame or V-Frame Evaporator Coils

- High efficiency heat exchanger design features an A-Frame coil for downflow (see Fig. 1-8) and V-Frame coil for upflow (see Fig. 1-9).

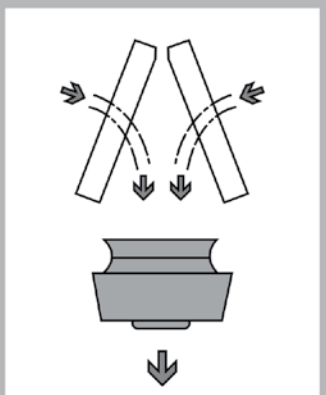

Figure 1-8 A-Frame coil

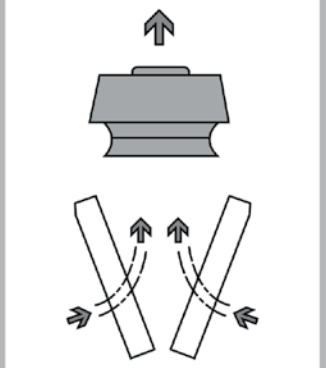

Figure 1-9 V-Frame coil

For precise control of cooling and dehumidification, designed to optimise heat transfer and minimise air side pressure drop.

- Draw-through design pulls air evenly through the large face area cooling coil to maximise heat transfer efficiency
- Double-angle condensate trays ensure correct water drainage.

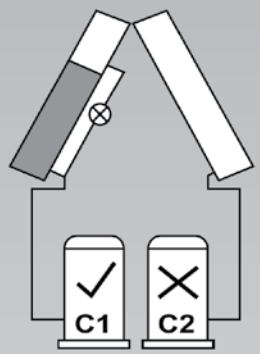

Figure 1-10 Dehumidification

High Sensible Heat Ratio (SHR)

- All models operate high sensible heat ratios to match the low latent loads of modern computer rooms and telephone exchanges and etc.
- With low latent capacity, little moisture is removed from the air so that humidity levels can be maintained without extra humidification, thereby ensuring lower energy consumption
- Proper airflow achieves favorable sensible heat ratios and provides maximum air change rate to ensure variations in room load are quickly detected and responded to.

DX Systems - Dehumidification Cycle (FC Fans)

- Compressorised models with forward curve (FC) fans employ split coil configurations, allowing latent cooling capacity to be substantially increased but only as required so that energy consumption is minimized whilst providing close temperature and humidity control. Room loads as low as 35% of unit cooling capacity can be supported with standard reheat. A dehumidification solenoid valve is used to realize this Dehumidification function, but only in 1# system. (See Fig. 1-10)
- Smaller heater size and unit full load amps (FLA) lowers electrical connection requirements and reduces installation costs.

Standard Compressor and EC fan system

- Capacity variation is derived by cycling the compressor ON or OFF to meet the room load e.g. for a room load of 7kW with a 10kW unit, the compressor would be required to operate 70% of the time say 4.2 minutes on for 1.8 minutes off. (See Fig. 1-11)

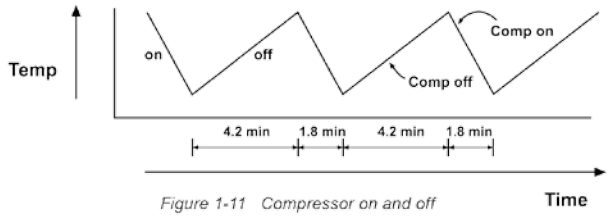

Figure 1-11 Compressor on and off

EC Direct Drive Fan for best efficiency

- High efficiency, external rotor electronically commutated (EC) motor with integrated electronics
- True soft start characteristics (inrush current lower than operating current)
- Backward curve, corrosion resistant aluminum fan wheel
- Maintenance free design and construction
- High external static pressure (ESP) motor options available

All downflow units with EC fans feature an 'in-floor' fan configuration to deliver the ultimate in energy efficiency. Fans are pre wired and easily lowered into the floor after unit positioning on site. No extra assembly of components, sections, fans or wiring.

Forward Curve FC Fans

- Forward curve double width double inlet (DWDI) centrifugal fans coupled to high efficiency motors are standard on all models.
- Innovative belt drive system automatically provides high belt tension during startup eliminating slippage and greatly extending belt life.
- Fan belts changed in seconds without tools.
- High external static pressure (ESP) motor options available.

Humidifier options



Figure 1-17 Infrared Humidifier

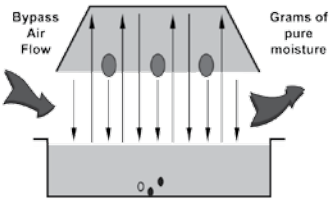

Figure 1-18 Infrared Humidifier Operation

Infrared humidification is standard on all PEX models. Steam electrode (cylinder) humidification is available as an option

- Instant humidification - high intensity quartz infrared lamps provide fast, responsive, energy efficient humidification.
- Full capacity achieved in 5-6 seconds therefore no wasted overshoot and energy waste.
- Particle free water vapour introduced into coil bypass air avoids condensate. (See Fig. 1-18)
- Autoflush™ cycle helps remove mineral deposits.
- Cleanable stainless steel humidifier pan.
- Will operate effectively using almost any water quality.

Electrode Humidifier (Optional)

- Direct acting electrode design suitable for a wide range of water quality
- Fail safe operation (electrodes will not function without water)
- Water vapour introduced into coil bypass air avoids condensation
- Fully serviceable cylinder bottle ensures quick and cost effective maintenance

Electric Heaters

- Single stage electric reheat system (2nd stage optional) with integral safeties
- 304 stainless steel, low watt density, fin-tubular elements
- Protected by Ground Current Detector
- Standard Reheat/Humidifier lockout - reduces power requirements during emergency power operation
- Heater sub assemblies are replaceable from the front of the unit

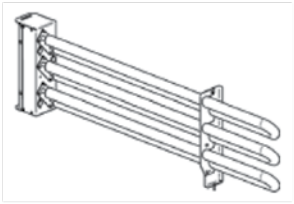

Figure 1-21 Stainless steel electric heater

Choice of refrigerants

All compressorised models included in this manual are designed to operate on R410A. Liebert PEX is also available with R22 and R407C refrigerant.

Choice of power applications

There are three types of power applications in this series of units: 400V/3N~/50Hz, 380V/3N~/60Hz and 460V/3~/60Hz, and they meet different market needs better.

Footprint & Serviceability

- High kW to footprint ratio (See fig. 1-22)
- Front accessible for installation and routine servicing
- Front doors are hinged and removable, offering improved service access to the unit internals
- Compressors, water cooled condensers and filter driers employ rota lock connections for ease of removal i.e., no 'hot'works

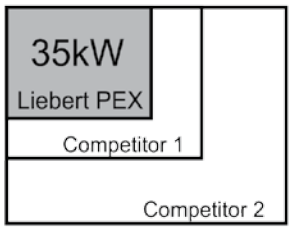

Figure 1-22 Unit Footprint

- Front withdrawable air filters allow downflow units to be connected to return air ductwork. Liebert PEX models are also reducing floor space used by air conditioning, thus having more space available for customer's IT equipment.

Filtration

The metal framed filter panels are an integral part of the system and withdrawable from the front of the unit. Filtration shall be provided by deep V form, dry disposable media housed in a metal frame, (See Fig. 1-23) The rated efficiency shall be to G4/EU4/MERV8 Standards.



Figure 1-23 Metal frame deep V form filter panel

Thermal Expansion Valve

To provide quick and accurate refrigerant system set up and calibration, the thermal expansion valve (TXV) is accessible via an access hatch to allow system set up and calibration while the unit is running. (See Fig. 1-24)



Figure 1-24 Thermal expansion value access

Upflow Air Cooled

Table 2-1 Data information (1)

Upflow-DX scroll compressors + EC fans					Air cooled					400V/3N~/50Hz
Model Size	PEX	1020	1025	1035	2055	2050	2060	2070	3090	3100
Rated Capacity 24°C DB, 50% RH, 45°C Condensing										
Total kW		18.8	22.7	31.9	52.5	46.2	58.1	65.3	88.1	97.1
Sensible kW		18.2	20.8	27.1	50.9	42.2	53.9	56.7	82.6	84.6
Air Flow	m³/h	6500	7500	8500	16000	13800	17000	17480	25170	25170
Evaporator Fan-Backward curve EC, direct drive										
No. of fan assemblies		1	1	1	2	2	2	2	3	3
Std. Motor-kW		3.1	3.1	3.1	3.1	3.1	3.1	3.1	3.1	3.1
Evaporator Coil-Copper tubes with rifled bore tubes, louvered aluminium fins										
No. of rows		3	3	4	4	3	4	4	4	4
Fin series-FPM (FPI)		550(14)								
Compressor-Copeland Compliant Scroll with Crankcase Heater										
No. of Compressors		1	1	1	1	2	2	2	2	2
Unit cooling steps		2 via HGBP				2 via Compressors				
Safety controls-kPA		LP cut out/in (auto reset) 370/560, HP cut out/in (auto reset) 4100/3300								
Humidification Control										
Infrared-kg/h		4.5	4.5	4.5	10	10	10	10	10	10
Opt. Electrode-kg/h		5	5	5	10	10	10	10	10	10
Dehumidification Control-Reduced air flow										
Reheat-Single, electric heater elements										
1 stage-kW		6	6	6	9	9	9	9	12	12
Opt. 2 stage=kW		12	12	12	18	18	18	18	24	24
Filter-Metal Frame, Deep V dry media disposable G4 type filter										
Nominal W X D X H -mm		800 x 600 x 100								
Qty		1	1	1	2	2	2	2	3	3
Full Load Current-400 Volts, 3 phase+N+E, 50 Hz Supply-Std DX unit only										
RFLA		25.8	27.6	34	52	49.2	59.2	62	76.9	84.1
Unit Connections										
Hot Gas-O.D.		22	22	22	22	22	22	22	22	22
Qty		1	1	1	1	2	2	2	2	2
Liquid-O.D.		16	16	16	16	16	16	16	16	16
Qty		1	1	1	1	2	2	2	2	2
Drain-Barb-mm		19	19	19	19	19	19	19	19	19
Hum.Supply-BSP-M		1/2"	1/2"	1/2"	1/2"	1/2"	1/2"	1/2"	1/2"	1/2"
Unit Dimensions & Weight										
Width-mm		853	853	853	1704	1704	1704	1704	2553	2553
Depth-mm		874	874	874	874	874	874	874	874	874
Height-mm		1970								
Unit Weight-kg		320	330	350	570	610	640	650	930	950
Unit Footprint										
Unit only-m²		0.74	0.74	0.74	1.49	1.49	1.49	1.49	2.23	2.23
Incl. Service area-m²		1.47	1.47	1.47	2.93	2.93	2.93	2.93	4.40	4.40
Service Access min-mm		850								

Notes:

1. All rated capacities are nominal values based on an ESP for Downflow 20Pa and for Upflow 50Pa, at sea level for R410A. For net capacities, deduct fan input power. Refer to the Liebert PEX air-cooled R410A series air conditioner Rating Program for specific input conditions, air flow, and configuration.
2. Minimum unit depth without front panels and hinges is 841mm. Minimum raised floor height 325mm for downflow EC fan units. Weights shown are for air cooled DX models.
3. Input power supply-400V +15%/-10%, 50Hz +/- 2. RFLA is for the standard configuration unit only and excludes all heat rejection equipment. RFLA based on standard unit. Refer to Liebert PEX air cooled R410A series air conditioner Rating Program & User Manual for electrical data on optional equipment.
4. All information and Technical Data are subject to change without notice.
5. The Liebert PEX air cooled R410A series air conditioner units are now also available with EC fans. The switching action of the EC fan power controls may interact with emergency backup generators or UPS systems.

Table 2-2 Data information (2)

Upflow-DX scroll compressors + EC fans					Air cooled					380V/3N~/60Hz
Model Size	PEX	1020	1025	1035	2055	2050	2060	2070	3090	3100
Rated Capacity 24°C DB, 50% RH, 45°C Condensing										
Total kW		19.6	22.6	32.5	54.1	45.8	56.1	66.5	85.9	99.7
Sensible kW		18.5	20.8	27.3	51.5	42.0	53.1	57.2	81.7	85.7
Air Flow	m^3/h	6500	7500	8500	16000	13800	17000	17480	25170	25170
Evaporator Fan-Backward curve EC, direct drive										
No. of fan assemblies		1	1	1	2	2	2	2	3	3
Std. Motor-kW		3.1	3.1	3.1	3.1	3.1	3.1	3.1	3.1	3.1
Evaporator Coil-Copper tubes with rifled bore tubes, louvered aluminium fins										
No. of rows		3	3	4	4	3	4	4	4	4
Fin series-FPM (FPI)		550(14)								
Compressor-Copeland Compliant Scroll with Crankcase Heater										
No. of Compressors		1	1	1	1	2	2	2	2	2
Unit cooling steps		2 via HGBP				2 via Compressors				
Safety controls-kPA		LP cut out/in (auto reset) 370/560, HP cut out/in (auto reset) 4100/3300								
Humidification Control										
Infrared-kg/h		4.5	4.5	4.5	10	10	10	10	10	10
Opt. Electrode-kg/h		5	5	5	10	10	10	10	10	10
Dehumidification Control-Reduced air flow										
Reheat-Single, electric heater elements										
1 stage-kW		6	6	6	9	9	9	9	12	12
Opt. 2 stage=kW		12	12	12	18	18	18	18	24	24
Filter-Metal Frame, Deep V dry media disposable G4 type filter										
Nominal W X D X H -mm		800 x 660 x 100								
Qty		1	1	1	2	2	2	2	3	3
Full Load Current-380 Volts, 3 phase+N+E, 60 Hz Supply-Std DX unit only										
RFLA		24.1	26.2	35.4	50.5	46.4	53	64.8	79.7	81.1
Unit Connections										
Hot Gas-O.D.		22	22	22	22	22	22	22	22	22
Qty		1	1	1	1	2	2	2	2	2
Liquid-O.D.		16	16	16	16	16	16	16	16	16
Qty		1	1	1	1	2	2	2	2	2
Drain-Barb-mm		19	19	19	19	19	19	19	19	19
Hum.Supply-BSP-M		1/2"	1/2"	1/2"	1/2"	1/2"	1/2"	1/2"	1/2"	1/2"
Unit Dimensions & Weight										
Width-mm		853	853	853	1704	1704	1704	1704	2553	2553
Depth-mm		874	874	874	874	874	874	874	874	874
Height-mm		1970								
Unit Weight-kg		320	330	350	570	610	640	650	930	950
Unit Footprint										
Unit only-m^2		0.74	0.74	0.74	1.49	1.49	1.49	1.49	2.23	2.23
Incl. Service area-m^2		1.47	1.47	1.47	2.93	2.93	2.93	2.93	4.40	4.40
Service Access min-mm		850								

Notes:

1. All rated capacities are nominal values based on an ESP for Downflow 20Pa and for Upflow 50Pa, at sea level for R410A. For net capacities, deduct fan input power. Refer to the Liebert PEX air-cooled R410A series air conditioner Rating Program for specific input conditions, air flow, and configuration.
2. Minimum unit depth without front panels and hinges is 841mm. Minimum raised floor height 325mm for downflow EC fan units. Weights shown are for air cooled DX models.
3. Input power supply 380V +15%/ 10%, 60Hz +/ 2. RFLA is for the standard configuration unit only and excludes all heat rejection equipment. RFLA based on standard unit. Refer to Liebert PEX air-cooled R410A series air conditioner Rating Program & User Manual for electrical data on optional equipment.
4. All information and Technical Data are subject to change without notice.
5. The Liebert PEX air-cooled R410A series air conditioner units are now also available with EC fans. The switching action of the EC fan power controls may interact with emergency backup generators or UPS systems.

Table 2-3 Data information (3)

Upflow-DX scroll compressors + EC fans					Air cooled					460V/3~/60Hz
Model Size	PEX	1020	1025	1035	2055	2050	2060	2070	3090	3100
Rated Capacity 24°C DB, 50% RH, 45°C Condensing										
Total kW		19.6	22.5	32.7	54.1	45.8	56.1	66.8	85.9	99.7
Sensible kW		18.5	20.7	27.4	51.5	41.9	53.1	57.4	81.7	85.7
Air Flow	m³/h	6500	7500	8500	16000	13800	17000	17480	25170	25170
Evaporator Fan-Backward curve EC, direct drive										
No. of fan assemblies		1	1	1	2	2	2	2	3	3
Std. Motor-kW		3.1	3.1	3.1	3.1	3.1	3.1	3.1	3.1	3.1
Evaporator Coil-Copper tubes with rifled bore tubes, louvered aluminium fins										
No. of rows		3	3	4	4	3	4	4	4	4
Fin series-FPM (FPI)		550(14)								
Compressor-Copeland Compliant Scroll with Crankcase Heater										
No. of Compressors		1	1	1	1	2	2	2	2	2
Unit cooling steps		2 via HGBP				2 via Compressors				
Safety controls-kPA		LP cut out/in (auto reset) 370/560, HP cut out/in (auto reset) 4100/3300								
Humidification Control										
Infrared-kg/h		4.5	4.5	4.5	10	10	10	10	10	10
Opt. Electrode-kg/h		5	5	5	10	10	10	10	10	10
Dehumidification Control-Reduced air flow										
Reheat-Single, electric heater elements										
1 stage-kW		6	6	6	9	9	9	9	12	12
Opt. 2 stage=kW		12	12	12	18	18	18	18	24	24
Filter-Metal Frame, Deep V dry media disposable G4 type filter										
Nominal W X D X H -mm		800 x 660 x 100								
Qty		1	1	1	2	2	2	2	3	3
Full Load Current-460 Volts, 3 phase+N+E, 60 Hz Supply-Std DX unit only										
RFLA		23.1	24.2	31	46.1	44.5	48.1	58.1	65.8	75.8
Unit Connections										
Hot Gas-O.D.		22	22	22	22	22	22	22	22	22
Qty		1	1	1	1	2	2	2	2	2
Liquid-O.D.		16	16	16	16	16	16	16	16	16
Qty		1	1	1	1	2	2	2	2	2
Drain-Barb-mm		19	19	19	19	19	19	19	19	19
Hum.Supply-BSP-M		1/2"	1/2"	1/2"	1/2"	1/2"	1/2"	1/2"	1/2"	1/2"
Unit Dimensions & Weight										
Width-mm		853	853	853	1704	1704	1704	1704	2553	2553
Depth-mm		874	874	874	874	874	874	874	874	874
Height-mm		1970								
Unit Weight-kg		320	330	350	570	610	640	650	930	950
Unit Footprint										
Unit only-m²		0.74	0.74	0.74	1.49	1.49	1.49	1.49	2.23	2.23
Incl. Service area-m²		1.47	1.47	1.47	2.93	2.93	2.93	2.93	4.40	4.40
Service Access min-mm		850								

Notes:

1. All rated capacities are nominal values based on an ESP for Downflow 20Pa and for Upflow 50Pa, at sea level for R410A. For net capacities, deduct fan input power. Refer to the Liebert PEX air-cooled R410A series air conditioner Rating Program for specific input conditions, air flow, and configuration.
2. Minimum unit depth without front panels and hinges is 841mm. Minimum raised floor height 325mm for downflow EC fan units. Weights shown are for air cooled DX models.
3. Input power supply 460V +15% /-10%, 60Hz +/- 2. RFLA is for the standard configuration unit only and excludes all heat rejection equipment. RFLA based on standard unit. Refer to Liebert PEX air-cooled R410A series air conditioner Rating Program & User Manual for electrical data on optional equipment.
4. All information and Technical Data are subject to change without notice.
5. The Liebert PEX air-cooled R410A series air conditioner units are now also available with EC fans. The switching action of the EC fan power controls may interact with emergency backup generators or UPS systems.

Table 2-4 Data information (4)

Upflow-DX scroll compressors + FC fans					Air cooled					400V/3N~/50Hz
Model Size	PEX	1020	1025	1035	2055	2050	2060	2070	3090	3100
Rated Capacity 24°C DB, 50% RH, 45°C Condensing										
Total kW		18.6	22.3	31.5	51.9	45.6	57.5	64.1	87.1	95.5
Sensible kW		16.6	19.1	25.9	45.9	39.5	51.0	53.2	77.8	79.8
Air Flow	m³/h	5400	6300	7920	13030	12240	15390	15480	22770	22860
Evaporator Fan-Backward curve EC, direct drive										
No. of fan assemblies		1	1	1	2	2	2	2	3	3
Std. Motor-kW		2.2	2.2	3	2.2	2.2	3	3	3	3
Evaporator Coil-Copper tubes with rifled bore tubes, louvered aluminium fins										
No. of rows		3	3	4	4	3	4	4	4	4
Fin series-FPM (FPI)		550(14)								
Compressor-Copeland Compliant Scroll with Crankcase Heater										
No. of Compressors		1	1	1	1	2	2	2	2	2
Unit cooling steps		2 via HGBP				2 via Compressors				
Safety controls-kPA		LP cut out/in (auto reset) 370/560, HP cut out/in (auto reset) 4100/3300								
Humidification Control										
Infrared-kg/h		4.5	4.5	4.5	10	10	10	10	10	10
Opt. Electrode-kg/h		5	5	5	10	10	10	10	10	10
Dehumidification Control-Reduced air flow										
Reheat-Single, electric heater elements										
1 stage-kW		6	6	6	9	9	9	9	12	12
Opt. 2 stage=kW		12	12	12	18	18	18	18	24	24
Filter-Metal Frame, Deep V dry media disposable G4 type filter										
Nominal W X D X H -mm		800 x 660 x 100								
Qty		1	1	1	2	2	2	2	3	3
Full Load Current-400 Volts, 3 phase+N+E, 50 Hz Supply-Std DX unit only										
RFLA		27.6	29.4	35.8	55.6	52.8	62.8	65.6	82.3	89.5
Unit Connections										
Hot Gas-O.D.		22	22	22	22	22	22	22	22	22
Qty		1	1	1	1	2	2	2	2	2
Liquid-O.D.		16	16	16	16	16	16	16	16	16
Qty		1	1	1	1	2	2	2	2	2
Drain-Barb-mm		19	19	19	19	19	19	19	19	19
Hum.Supply-BSP-M		1/2"	1/2"	1/2"	1/2"	1/2"	1/2"	1/2"	1/2"	1/2"
Unit Dimensions & Weight										
Width-mm		853	853	853	1704	1704	1704	1704	2553	2553
Depth-mm		874	874	874	874	874	874	874	874	874
Height-mm		1970								
Unit Weight-kg		320	330	350	570	610	640	650	930	950
Unit Footprint										
Unit only-m²		0.74	0.74	0.74	1.49	1.49	1.49	1.49	2.23	2.23
Incl. Service area-m²		1.47	1.47	1.47	2.93	2.96	2.93	2.93	4.40	4.40
Service Access min-mm		850								

Notes:

1. All rated capacities are nominal values based on an ESP for Downflow 20Pa and for Upflow 50Pa, at sea level for R410A. For net capacities, deduct fan input power. Refer to the Liebert PEX air cooled R410A series air conditioner Rating Program for specific input conditions, air flow, and configuration.
2. Minimum unit depth without front panels and hinges is 841mm. Weights shown are for air cooled DX models.
3. Input power supply 400V +15%/ -10%, 50Hz +/- 2.RFLA is for the standard configuration unit only and excludes all heat rejection equipment. RFLA based on standard unit. Refer to Liebert PEX air cooled R410A series air conditioner Rating Program & User Manual for electrical data on optional equipment.
4. 4. All information and Technical Data are subject to change without notice.

Table 2-5 Data information (5)

Upflow-DX scroll compressors + FC fans						Air cooled				380V/3N~/60Hz
Model Size	PEX	1020	1025	1035	2055	2050	2060	2070	3090	3100
Rated Capacity 24°C DB, 50% RH, 45°C Condensing										
Total kW		19.4	22.3	32.1	53.4	45.3	55.6	65.3	85.1	98.0
Sensible kW		17.2	19.3	26.2	47.2	39.8	50.3	53.7	77.1	80.9
Air Flow	m^3/h	5400	6300	7920	13030	12240	15390	15480	22770	22860
Evaporator Fan-Backward curve EC, direct drive										
No. of fan assemblies		1	1	1	2	2	2	2	3	3
Std. Motor-kW		2.2	2.2	3	2.2	2.2	3	3	3	3
Evaporator Coil-Copper tubes with rifled bore tubes, louvered aluminium fins										
No. of rows		3	3	4	4	3	4	4	4	4
Fin series-FPM (FPI)		550(14)								
Compressor-Copeland Compliant Scroll with Crankcase Heater										
No. of Compressors		1	1	1	1	2	2	2	2	2
Unit cooling steps		2 via HGBP				2 via Compressors				
Safety controls-kPA		LP cut out/in (auto reset) 370/560, HP cut out/in (auto reset) 4100/3300								
Humidification Control										
Infrared-kg/h		4.5	4.5	4.5	10	10	10	10	10	10
Opt. Electrode-kg/h		5	5	5	10	10	10	10	10	10
Dehumidification Control-Reduced air flow										
Reheat-Single, electric heater elements										
1 stage-kW		6	6	6	9	9	9	9	12	12
Opt. 2 stage=kW		12	12	12	18	18	18	18	24	24
Filter-Metal Frame, Deep V dry media disposable G4 type filter										
Nominal W X D X H -mm		800 x 600 x 100								
Qty		1	1	1	2	2	2	2	3	3
Full Load Current-380 Volts, 3 phase+N+E, 60 Hz Supply-Std DX unit only										
RFLA		25.7	27.8	37	53.7	49.6	56.2	68	84.5	85.9
Unit Connections										
Hot Gas-O.D.		22	22	22	22	22	22	22	22	22
Qty		1	1	1	1	2	2	2	2	2
Liquid-O.D.		16	16	16	16	16	16	16	16	16
Qty		1	1	1	1	2	2	2	2	2
Drain-Barb-mm		19	19	19	19	19	19	19	19	19
Hum.Supply-BSP-M		1/2"	1/2"	1/2"	1/2"	1/2"	1/2"	1/2"	1/2"	1/2"
Unit Dimensions & Weight										
Width-mm		853	853	853	1704	1704	1704	1704	2553	2553
Depth-mm		874	874	874	874	874	874	874	874	874
Height-mm		1970								
Unit Weight-kg		320	330	350	570	610	640	650	930	950
Unit Footprint										
Unit only-m^2		0.74	0.74	0.74	1.49	1.49	1.49	1.49	2.23	2.23
Incl. Service area-m^2		1.47	1.47	1.47	2.93	2.93	2.93	2.93	4.40	4.40
Service Access min-mm		850								

Notes:

1. All rated capacities are nominal values based on an ESP for Downflow 20Pa and for Upflow 50Pa, at sea level for R410A. For net capacities, deduct fan input power. Refer to the Liebert PEX air-cooled R410A series air conditioner Rating Program for specific input conditions, air flow, and configuration.
2. Minimum unit depth without front panels and hinges is 841mm. Weights shown are for air cooled DX models .
3. Input power supply 380V +15%/ -10%, 60Hz +/- 2. RFLA is for the standard configuration unit only and excludes all heat rejection equipment. RFLA based on standard unit. Refer to Liebert PEX air-cooled R410A series air conditioner Rating Program & User Manual for electrical data on optional equipment.
4. All information and Technical Data are subject to change without notice.

Table 2-6 Data information (6)

Upflow-DX scroll compressors + FC fans					Air cooled					460V/3~/60Hz
Model Size	PEX	1020	1025	1035	2055	2050	2060	2070	3090	3100
Rated Capacity 24°C DB, 50% RH, 45°C Condensing										
Total kW		19.4	22.2	32.2	53.4	45.2	55.6	65.6	85.1	98.0
Sensible kW		17.2	19.2	26.2	47.2	39.7	50.3	53.8	77.1	81.0
Air Flow	m³/h	5400	6300	7920	13030	12240	15390	15480	22770	22860
Evaporator Fan-Backward curve EC, direct drive										
No. of fan assemblies		1	1	1	2	2	2	2	3	3
Std. Motor-kW		2.2	2.2	3	2.2	2.2	3	3	3	3
Evaporator Coil-Copper tubes with rifled bore tubes, louvered aluminium fins										
No. of rows		3	3	4	4	3	4	4	4	4
Fin series-FPM (FPI)		550(14)								
Compressor-Copeland Compliant Scroll with Crankcase Heater										
No. of Compressors		1	1	1	1	2	2	2	2	2
Unit cooling steps		2 via HGBP				2 via Compressors				
Safety controls-kPA		LP cut out/in (auto reset) 370/560, HP cut out/in (auto reset) 4100/3300								
Humidification Control										
Infrared-kg/h		4.5	4.5	4.5	10	10	10	10	10	10
Opt. Electrode-kg/h		5	5	5	10	10	10	10	10	10
Dehumidification Control-Reduced air flow										
Reheat-Single, electric heater elements										
1 stage-kW		6	6	6	9	9	9	9	12	12
Opt. 2 stage=kW		12	12	12	18	18	18	18	24	24
Filter-Metal Frame, Deep V dry media disposable G4 type filter										
Nominal W X D X H -mm		800 x 660 x 100								
Qty		1	1	1	2	2	2	2	3	3
Full Load Current-460 Volts, 3 phase+N+E, 60 Hz Supply-Std DX unit only										
RFLA		23.8	24.9	31.7	47.5	45.9	49.5	59.5	67.9	77.9
Unit Connections										
Hot Gas-O.D.		22	22	22	22	22	22	22	22	22
Qty		1	1	1	1	2	2	2	2	2
Liquid-O.D.		16	16	16	16	16	16	16	16	16
Qty		1	1	1	1	2	2	2	2	2
Drain-Barb-mm		19	19	19	19	19	19	19	19	19
Hum.Supply-BSP-M		1/2"	1/2"	1/2"	1/2"	1/2"	1/2"	1/2"	1/2"	1/2"
Unit Dimensions & Weight										
Width-mm		853	853	853	1704	1704	1704	1704	2553	2553
Depth-mm		874	874	874	874	874	874	874	874	874
Height-mm		1970								
Unit Weight-kg		320	330	350	570	610	640	650	930	950
Unit Footprint										
Unit only-m²		0.74	0.74	0.74	1.49	1.49	1.49	1.49	2.23	2.23
Incl. Service area-m²		1.47	1.47	1.47	2.93	2.96	2.93	2.93	4.40	4.40
Service Access min-mm		850								

Notes:

1. All rated capacities are nominal values based on an ESP for Downflow 20Pa and for Upflow 50Pa, at sea level for R410A. For net capacities, deduct fan input power. Refer to the Liebert PEX air-cooled R410A series air conditioner Rating Program for specific input conditions, air flow, and configuration.
2. Minimum unit depth without front panels and hinges is 841mm. Weights shown are for air cooled DX models .
3. Input power supply 460V +15%/ -10%, 60Hz +/- 2. RFLA is for the standard configuration unit only and excludes all heat rejection equipment. RFLA based on standard unit. Refer to Liebert PEX air-cooled R410A series air conditioner Rating Program & User Manual for electrical data on optional equipment.
4. All information and Technical Data are subject to change without notice.

Downflow Air Cooled

Table 2-7 Data information (7)

Downflow-DX scroll compressors + EC fans						Air cooled				400V/3N~/50Hz
Model Size	PEX	1020	1025	1035	2055	2050	2060	2070	3090	3100
Rated Capacity 24°C DB, 50% RH, 45°C Condensing										
Total kW		19.2	22.3	32.5	53.4	47.2	59.4	66.3	89.8	98.9
Sensible kW		18.7	21.8	27.7	51.7	43.2	55.2	57.8	84.3	86.4
Air Flow	m^3/h	6500	7500	8500	16000	13800	17000	17600	25500	25800
Evaporator Fan-Backward curve EC, direct drive										
No. of fan assemblies		1	1	1	2	2	2	2	3	3
Std. Motor-kW		3.1	3.1	3.1	3.1	3.1	3.1	3.1	3.1	3.1
Evaporator Coil-Copper tubes with rifled bore tubes, louvered aluminium fins										
No. of rows		3	3	4	4	3	4	4	4	4
Fin series-FPM (FPI)		550(14)								
Compressor-Copeland Compliant Scroll with Crankcase Heater										
No. of Compressors		1	1	1	1	2	2	2	2	2
Unit cooling steps		2 via HGBP				2 via Compressors				
Safety controls-kPA		LP cut out/in (auto reset) 370/560, HP cut out/in (auto reset) 4100/3300								
Humidification Control										
Infrared-kg/h		4.5	4.5	4.5	10	10	10	10	10	10
Opt. Electrode-kg/h		5	5	5	10	10	10	10	10	10
Dehumidification Control-Reduced air flow										
Reheat-Single, electric heater elements										
1 stage-kW		6	6	6	9	9	9	9	12	12
Opt. 2 stage=kW		12	12	12	18	18	18	18	24	24
Filter-Metal Frame, Deep V dry media disposable G4 type filter										
Nominal W X D X H -mm		800 x 600 x 100								
Qty		1	1	1	2	2	2	2	3	3
Full Load Current-400 Volts, 3 phase+N+E, 50 Hz Supply-Std DX unit only										
RFLA		25.8	27.6	34	52	49.2	59.2	62	76.9	84.1
Unit Connections										
Hot Gas-O.D.		22	22	22	22	22	22	22	22	22
Qty		1	1	1	1	2	2	2	2	2
Liquid-O.D.		16	16	16	16	16	16	16	16	16
Qty		1	1	1	1	2	2	2	2	2
Drain-Barb-mm		19	19	19	19	19	19	19	19	19
Hum.Supply-BSP-M		1/2"	1/2"	1/2"	1/2"	1/2"	1/2"	1/2"	1/2"	1/2"
Unit Dimensions & Weight										
Width-mm		853	853	853	1704	1704	1704	1704	2553	2553
Depth-mm		874	874	874	874	874	874	874	874	874
Height-mm		1970								
Unit Weight-kg		320	330	350	570	610	640	650	930	950
Unit Footprint										
Unit only-m^2		0.74	0.74	0.74	1.49	1.49	1.49	1.49	2.23	2.23
Incl. Service area-m^2		1.47	1.47	1.47	2.93	2.93	2.93	2.93	4.40	4.40
Service Access min-mm		850								

Notes:

1. All rated capacities are nominal values based on an ESP for Downflow 20Pa and for Upflow 50Pa, at sea level for R410A. For net capacities, deduct fan input power. Refer to the Liebert PEX air-cooled R410A series air conditioner Rating Program for specific input conditions, air flow, and configuration.
2. Minimum unit depth without front panels and hinges is 841mm. Minimum raised floor height 325mm for downflow EC fan units. Weights shown are for air cooled DX models.
3. Input power supply 400V +15%/ 10%, 50Hz +/ 2. RFLA is for the standard configuration unit only and excludes all heat rejection equipment. RFLA based on standard unit. Refer to Liebert PEX air cooled R410A series air conditioner Rating Program & User Manual for electrical data on optional equipment.
4. All information and Technical Data are subject to change without notice.
5. The Liebert PEX air cooled R410A series air conditioner units are now also available with EC fans. The switching action of the EC fan power controls may interact with emergency backup generators or UPS systems.

Table 2-8 Data information (8)

Downflow-DX scroll compressors + EC fans					Air cooled					380V/3N~/60Hz
Model Size	PEX	1020	1025	1035	2055	2050	2060	2070	3090	3100
Rated Capacity 24°C DB, 50% RH, 45°C Condensing										
Total kW		20.1	23.1	33.1	54.9	46.8	57.5	67.5	87.7	101.5
Sensible kW		19.0	21.5	27.9	52.3	43.1	54.4	58.3	83.4	87.5
Air Flow	m³/h	6500	7500	8500	16000	13800	17000	17600	25500	25800
Evaporator Fan-Backward curve EC, direct drive										
No. of fan assemblies		1	1	1	2	2	2	2	3	3
Std. Motor-kW		3.1	3.1	3.1	3.1	3.1	3.1	3.1	3.1	3.1
Evaporator Coil-Copper tubes with rifled bore tubes, louvered aluminium fins										
No. of rows		3	3	4	4	3	4	4	4	4
Fin series-FPM (FPI)		550(14)								
Compressor-Copeland Compliant Scroll with Crankcase Heater										
No. of Compressors		1	1	1	1	2	2	2	2	2
Unit cooling steps		2 via HGBP				2 via Compressors				
Safety controls-kPA		LP cut out/in (auto reset) 370/560, HP cut out/in (auto reset) 4100/3300								
Humidification Control										
Infrared-kg/h		4.5	4.5	4.5	10	10	10	10	10	10
Opt. Electrode-kg/h		5	5	5	10	10	10	10	10	10
Dehumidification Control-Reduced air flow										
Reheat-Single, electric heater elements										
1 stage-kW		6	6	6	9	9	9	9	12	12
Opt. 2 stage=kW		12	12	12	18	18	18	18	24	24
Filter-Metal Frame, Deep V dry media disposable G4 type filter										
Nominal W X D X H -mm		800 x 660 x 100								
Qty		1	1	1	2	2	2	2	3	3
Full Load Current-380 Volts, 3 phase+N+E, 60 Hz Supply-Std DX unit only										
RFLA		24.1	26.2	35.4	50.5	46.4	53	64.8	79.7	81.1
Unit Connections										
Hot Gas-O.D.		22	22	22	22	22	22	22	22	22
Qty		1	1	1	1	2	2	2	2	2
Liquid-O.D.		16	16	16	16	16	16	16	16	16
Qty		1	1	1	1	2	2	2	2	2
Drain-Barb-mm		19	19	19	19	19	19	19	19	19
Hum.Supply-BSP-M		1/2"	1/2"	1/2"	1/2"	1/2"	1/2"	1/2"	1/2"	1/2"
Unit Dimensions & Weight										
Width-mm		853	853	853	1704	1704	1704	1704	2553	2553
Depth-mm		874	874	874	874	874	874	874	874	874
Height-mm		1970								
Unit Weight-kg		320	330	350	570	610	640	650	930	950
Unit Footprint										
Unit only-m²		0.74	0.74	0.74	1.49	1.49	1.49	1.49	2.23	2.23
Incl. Service area-m²		1.47	1.47	1.47	2.93	2.96	2.93	2.93	4.40	4.40
Service Access min-mm		850								

Notes:

1. All rated capacities are nominal values based on an ESP for Downflow 20Pa and for Upflow 50Pa, at sea level for R410A. For net capacities, deduct fan input power. Refer to the Liebert PEX air-cooled R410A series air conditioner Rating Program for specific input conditions, air flow, and configuration.
2. Minimum unit depth without front panels and hinges is 841mm. Minimum raised floor height 325mm for downflow EC fan units. Weights shown are for air cooled DX models
3. Input power supply 380V +15%/ 10%, 60Hz +/ 2. RFLA is for the standard configuration unit only and excludes all heat rejection equipment. RFLA based on standard unit. Refer to Liebert PEX air-cooled R410A series air conditioner Rating Program & User Manual for electrical data on optional equipment.
4. All information and Technical Data are subject to change without notice.
5. The Liebert PEX air-cooled R410A series air conditioner units are now also available with EC fans. The switching action of the EC fan power controls may interact with emergency backup generators or UPS systems.

Table 2-9 Data information (9)

Downflow-DX scroll compressors + EC fans						Air cooled				460V/3~/60Hz
Model Size	PEX	1020	1025	1035	2055	2050	2060	2070	3090	3100
Rated Capacity 24°C DB, 50% RH, 45°C Condensing										
Total kW		20.0	23.1	33.2	54.9	46.8	57.4	67.9	87.7	101.5
Sensible kW		19.0	21.5	28.0	52.3	43.0	54.4	58.5	83.4	87.5
Air Flow	m³/h	6500	7500	8500	16000	13800	17000	17600	25500	25800
Evaporator Fan-Backward curve EC, direct drive										
No. of fan assemblies		1	1	1	2	2	2	2	3	3
Std. Motor-kW		3.1	3.1	3.1	3.1	3.1	3.1	3.1	3.1	3.1
Evaporator Coil-Copper tubes with rifled bore tubes, louvered aluminium fins										
No. of rows		3	3	4	4	3	4	4	4	4
Fin series-FPM (FPI)		550(14)								
Compressor-Copeland Compliant Scroll with Crankcase Heater										
No. of Compressors		1	1	1	1	2	2	2	2	2
Unit cooling steps		2 via HGBP				2 via Compressors				
Safety controls-kPA		LP cut out/in (auto reset) 370/560, HP cut out/in (auto reset) 4100/3300								
Humidification Control										
Infrared-kg/h		4.5	4.5	4.5	10	10	10	10	10	10
Opt. Electrode-kg/h		5	5	5	10	10	10	10	10	10
Dehumidification Control-Reduced air flow										
Reheat-Single, electric heater elements										
1 stage-kW		6	6	6	9	9	9	9	12	12
Opt. 2 stage=kW		12	12	12	18	18	18	18	24	24
Filter-Metal Frame, Deep V dry media disposable G4 type filter										
Nominal W X D X H -mm		800 x 660 x 100								
Qty		1	1	1	2	2	2	2	3	3
Full Load Current-460 Volts, 3 phase+N+E, 60 Hz Supply-Std DX unit only										
RFLA		23.1	24.2	31	46.1	44.5	48.1	58.1	65.8	75.8
Unit Connections										
Hot Gas-O.D.		22	22	22	22	22	22	22	22	22
Qty		1	1	1	1	2	2	2	2	2
Liquid-O.D.		16	16	16	16	16	16	16	16	16
Qty		1	1	1	1	2	2	2	2	2
Drain-Barb-mm		19	19	19	19	19	19	19	19	19
Hum.Supply-BSP-M		1/2"	1/2"	1/2"	1/2"	1/2"	1/2"	1/2"	1/2"	1/2"
Unit Dimensions & Weight										
Width-mm		853	853	853	1704	1704	1704	1704	2553	2553
Depth-mm		874	874	874	874	874	874	874	874	874
Height-mm		1970								
Unit Weight-kg		320	330	350	570	610	640	650	930	950
Unit Footprint										
Unit only-m²		0.74	0.74	0.74	1.49	1.49	1.49	1.49	2.23	2.23
Incl. Service area-m²		1.47	1.47	1.47	2.93	2.96	2.93	2.93	4.40	4.40
Service Access min-mm		850								

Notes:

1. All rated capacities are nominal values based on an ESP for Downflow 20Pa and for Upflow 50Pa, at sea level for R410A. For net capacities, deduct fan input power. Refer to the Liebert PEX air-cooled R410A series air conditioner Rating Program for specific input conditions, air flow, and configuration.
2. Minimum unit depth without front panels and hinges is 841mm. Minimum raised floor height 325mm for downflow EC fan units.Weights shown are for air cooled DX models
3. Input power supply 380V +15%/-10%, 60Hz +/- 2. RFLA is for the standard configuration unit only and excludes all heat rejection equipment. RFLA based on standard unit. Refer to liebert PEX air-cooled R410A series air conditioner Rating Program & User Manual for electrical data on optional equipment.
4. All information and Technical Data are subject to change without notice.
5. The Liebert PEX air-cooled R410A series air conditioner units are now also available with EC fans. The switching action of the EC fan power controls may interact with emergency backup generators or UPS systems.

Table 2-10 Data information (10)

Downflow-DX scroll compressors + FC fans						Air cooled				400V/3N~/50Hz
Model Size	PEX	1020	1025	1035	2055	2050	2060	2070	3090	3100
Rated Capacity 24°C DB, 50% RH, 45°C Condensing										
Total kW		18.7	22.8	31.8	51.9	46.0	57.9	64.6	87.6	96.5
Sensible kW		17.2	20.1	26.7	47.2	41.0	52.7	54.6	80.0	82.2
Air Flow	m³/h	5670	6660	8190	13680	12960	16200	16020	23940	23760
Evaporator Fan-Backward curve EC, direct drive										
No. of fan assemblies		1	1	1	2	2	2	2	3	3
Std. Motor-kW		2.2	2.2	3	2.2	2.2	3	3	3	3
Evaporator Coil-Copper tubes with rifled bore tubes, louvered aluminium fins										
No. of rows		3	3	4	4	3	4	4	4	4
Fin series-FPM (FPI)		550(14)								
Compressor-Copeland Compliant Scroll with Crankcase Heater										
No. of Compressors		1	1	1	1	2	2	2	2	2
Unit cooling steps		2 via HGBP				2 via Compressors				
Safety controls-kPA		LP cut out/in (auto reset) 370/560, HP cut out/in (auto reset) 4100/3300								
Humidification Control										
Infrared-kg/h		4.5	4.5	4.5	10	10	10	10	10	10
Opt. Electrode-kg/h		5	5	5	10	10	10	10	10	10
Dehumidification Control-Reduced air flow										
Reheat-Single, electric heater elements										
1 stage-kW		6	6	6	9	9	9	9	12	12
Opt. 2 stage=kW		12	12	12	18	18	18	18	24	24
Filter-Metal Frame, Deep V dry media disposable G4 type filter										
Nominal W X D X H -mm		800 x 660 x 100								
Qty		1	1	1	2	2	2	2	3	3
Full Load Current-400 Volts, 3 phase+N+E, 50 Hz Supply-Std DX unit only										
RFLA		27.6	29.4	35.8	55.6	52.8	62.8	65.6	82.3	89.5
Unit Connections										
Hot Gas-O.D.		22	22	22	22	22	22	22	22	22
Qty		1	1	1	1	2	2	2	2	2
Liquid-O.D.		16	16	16	16	16	16	16	16	16
Qty		1	1	1	1	2	2	2	2	2
Drain-Barb-mm		19	19	19	19	19	19	19	19	19
Hum.Supply-BSP-M		1/2"	1/2"	1/2"	1/2"	1/2"	1/2"	1/2"	1/2"	1/2"
Unit Dimensions & Weight										
Width-mm		853	853	853	1704	1704	1704	1704	2553	2553
Depth-mm		874	874	874	874	874	874	874	874	874
Height-mm		1970								
Unit Weight-kg		320	330	350	570	610	640	650	930	950
Unit Footprint										
Unit only-m²		0.74	0.74	0.74	1.49	1.49	1.49	1.49	2.23	2.23
Incl. Service area-m²		1.47	1.47	1.47	2.93	2.96	2.93	2.93	4.40	4.40
Service Access min-mm		850								

Notes:

1. All rated capacities are nominal values based on an ESP for Downflow 20Pa and for Upflow 50Pa, at sea level for R410A. For net capacities, deduct fan input power. Refer to the Liebert PEX air-cooled R410A series air conditioner Rating Program for specific input conditions, air flow, and configuration.
2. Minimum unit depth without front panels and hinges is 841mm. Weights shown are for air cooled DX models.
3. Input power supply 400V +15%/- 10%, 50Hz +/- 2. RFLA is for the standard configuration unit only and excludes all heat rejection equipment. RFLA based on standard unit. Refer to Liebert PEX air-cooled R410A series air conditioner Rating Program & User Manual for electrical data on optional equipment.
4. All information and Technical Data are subject to change without notice.

Table 2-11 Data information (11)

Downflow-DX scroll compressors + FC fans						Air cooled				380V/3N~/60Hz
Model Size	PEX	1020	1025	1035	2055	2050	2060	2070	3090	3100
Rated Capacity 24°C DB, 50% RH, 45°C Condensing										
Total kW		19.6	22.7	32.4	53.4	45.7	56.0	65.8	85.5	99.0
Sensible kW		18.0	20.2	27.0	48.4	41.3	51.9	55.2	79.2	83.3
Air Flow	m³/h	5670	6660	8190	13680	12960	16200	16020	23940	23760
Evaporator Fan-Backward curve EC, direct drive										
No. of fan assemblies		1	1	1	2	2	2	2	3	3
Std. Motor-kW		2.2	2.2	3	2.2	2.2	3	3	3	3
Evaporator Coil-Copper tubes with rifled bore tubes, louvered aluminium fins										
No. of rows		3	3	4	4	3	4	4	4	4
Fin series-FPM (FPI)		550(14)								
Compressor-Copeland Compliant Scroll with Crankcase Heater										
No. of Compressors		1	1	1	1	2	2	2	2	2
Unit cooling steps		2 via HGBP				2 via Compressors				
Safety controls-kPA		LP cut out/in (auto reset) 370/560, HP cut out/in (auto reset) 4100/3300								
Humidification Control										
Infrared-kg/h		4.5	4.5	4.5	10	10	10	10	10	10
Opt. Electrode-kg/h		5	5	5	10	10	10	10	10	10
Dehumidification Control-Reduced air flow										
Reheat-Single, electric heater elements										
1 stage-kW		6	6	6	9	9	9	9	12	12
Opt. 2 stage=kW		12	12	12	18	18	18	18	24	24
Filter-Metal Frame, Deep V dry media disposable G4 type filter										
Nominal W X D X H -mm		800 x 660 x 100								
Qty		1	1	1	2	2	2	2	3	3
Full Load Current-380 Volts, 3 phase+N+E, 60 Hz Supply-Std DX unit only										
RFLA		25.7	27.8	37	53.7	49.6	56.2	68	84.5	85.9
Unit Connections										
Hot Gas-O.D.		22	22	22	22	22	22	22	22	22
Qty		1	1	1	1	2	2	2	2	2
Liquid-O.D.		16	16	16	16	16	16	16	16	16
Qty		1	1	1	1	2	2	2	2	2
Drain-Barb-mm		19	19	19	19	19	19	19	19	19
Hum.Supply-BSP-M		1/2"	1/2"	1/2"	1/2"	1/2"	1/2"	1/2"	1/2"	1/2"
Unit Dimensions & Weight										
Width-mm		853	853	853	1704	1704	1704	1704	2553	2553
Depth-mm		874	874	874	874	874	874	874	874	874
Height-mm		1970								
Unit Weight-kg		320	330	350	570	610	640	650	930	950
Unit Footprint										
Unit only-m²		0.74	0.74	0.74	1.49	1.49	1.49	1.49	2.23	2.23
Incl. Service area-m²		1.47	1.47	1.47	2.93	2.96	2.93	2.93	4.40	4.40
Service Access min-mm		850								

Notes:

1. All rated capacities are nominal values based on an ESP for Downflow 20Pa and for Upflow 50Pa, at sea level for R410A. For net capacities, deduct fan input power. Refer to the Liebert PEX air-cooled R410A series air conditioner Rating Program for specific input conditions, air flow, and configuration.
2. Minimum unit depth without front panels and hinges is 841mm. Weights shown are for air cooled DX models.
3. Input power supply 380V +15%/ -10%, 60Hz +/- 2. RFLA is for the standard configuration unit only and excludes all heat rejection equipment. RFLA based on standard unit. Refer to Liebert PEX air-cooled R410A series air conditioner Rating Program & User Manual for electrical data on optional equipment.
4. All information and Technical Data are subject to change without notice.

Table 2-12 Data information (12)

Downflow-DX scroll compressors + FC fans					Air cooled					380V/3N~/60Hz
Model Size	PEX	1020	1025	1035	2055	2050	2060	2070	3090	3100
Rated Capacity 24°C DB, 50% RH, 45°C Condensing										
Total kW		19.6	22.6	32.5	53.4	45.6	56.0	66.1	85.5	99.1
Sensible kW		18.0	20.2	27.0	48.4	41.2	51.9	55.3	79.2	83.4
Air Flow	m^3/h	5670	6660	8190	13680	12960	16200	16020	23940	23760
Evaporator Fan-Backward curve EC, direct drive										
No. of fan assemblies		1	1	1	2	2	2	2	3	3
Std. Motor-kW		2.2	2.2	3	2.2	2.2	3	3	3	3
Evaporator Coil-Copper tubes with rifled bore tubes, louvered aluminium fins										
No. of rows		3	3	4	4	3	4	4	4	4
Fin series-FPM (FPI)		550(14)								
Compressor-Copeland Compliant Scroll with Crankcase Heater										
No. of Compressors		1	1	1	1	2	2	2	2	2
Unit cooling steps		2 via HGBP				2 via Compressors				
Safety controls-kPA		LP cut out/in (auto reset) 370/560, HP cut out/in (auto reset) 4100/3300								
Humidification Control										
Infrared-kg/h		4.5	4.5	4.5	10	10	10	10	10	10
Opt. Electrode-kg/h		5	5	5	10	10	10	10	10	10
Dehumidification Control-Reduced air flow										
Reheat-Single, electric heater elements										
1 stage-kW		6	6	6	9	9	9	9	12	12
Opt. 2 stage=kW		12	12	12	18	18	18	18	24	24
Filter-Metal Frame, Deep V dry media disposable G4 type filter										
Nominal W X D X H -mm		800 x 660 x 100								
Qty		1	1	1	2	2	2	2	3	3
Full Load Current-380 Volts, 3 phase+N+E, 60 Hz Supply-Std DX unit only										
RFLA		23.8	24.9	31.7	47.5	45.9	45.9	59.5	67.9	77.9
Unit Connections										
Hot Gas-O.D.		22	22	22	22	22	22	22	22	22
Qty		1	1	1	1	2	2	2	2	2
Liquid-O.D.		16	16	16	16	16	16	16	16	16
Qty		1	1	1	1	2	2	2	2	2
Drain-Barb-mm		19	19	19	19	19	19	19	19	19
Hum.Supply-BSP-M		1/2"	1/2"	1/2"	1/2"	1/2"	1/2"	1/2"	1/2"	1/2"
Unit Dimensions & Weight										
Width-mm		853	853	853	1704	1704	1704	1704	2553	2553
Depth-mm		874	874	874	874	874	874	874	874	874
Height-mm		1970								
Unit Weight-kg		320	330	350	570	610	640	650	930	950
Unit Footprint										
Unit only-m^2		0.74	0.74	0.74	1.49	1.49	1.49	1.49	2.23	2.23
Incl. Service area-m^2		1.47	1.47	1.47	2.93	2.96	2.93	2.93	4.40	4.40
Service Access min-mm		850								

Notes:

1. All rated capacities are nominal values based on an ESP for Downflow 20Pa and for Upflow 50Pa, at sea level for R410A. For net capacities, deduct fan input power. Refer to the Liebert PEX air cooled R410A series air conditioner Rating Program for specific input conditions, air flow, and configuration.
2. Minimum unit depth without front panels and hinges is 841mm. Weights shown are for air cooled DX models.
3. Input power supply 460V +15%/ 10%, 60Hz +/ 2. RFLA is for the standard configuration unit only and excludes all heat rejection equipment. RFLA based on standard unit. Refer to Liebert PEX air cooled R410A series air conditioner Rating Program & User Manual for electrical data on optional equipment.
4. All information and Technical Data are subject to change without notice.

Liebert® PEX+

In today's data center, the cooling infrastructure accounts the most of the total energy consumption. Besides reliability and capacity, the improvement of efficiency is a significant cooling challenge for many IT and facility managers.

Introducing Liebert® PEX+, a new generation high efficiency cooling solution from Emerson Network Power.

The Liebert® PEX+ is designed as a modular-type room-based precision cooling system for IT critical equipment that requires high level of sensible heat elimination, precise temperature and humidity control. It is available in both air-cooled (20 - 100kW) and chilled water (30 - 210kW) configurations to cover a wide range of room applications.

This cooling solution delivers the best combination of availability, capacity and energy-efficiency. It meets today's data center demands, which keeping the energy costs low. The modular design of Liebert® PEX+ high-efficiency precision cooling system features easy deployment to accommodate rapid growth and change of critical loads.



Liebert® PEX+ Cooling Unit delivers Effciency Without Compromise
Efficiency Without Compromise provides a path to optimize data center infrastructure around design, operating and management efficiency – while maintaining or improving availability.





Liebert® PEX+: Data Center Precision Cooling for Maximum Energy Saving

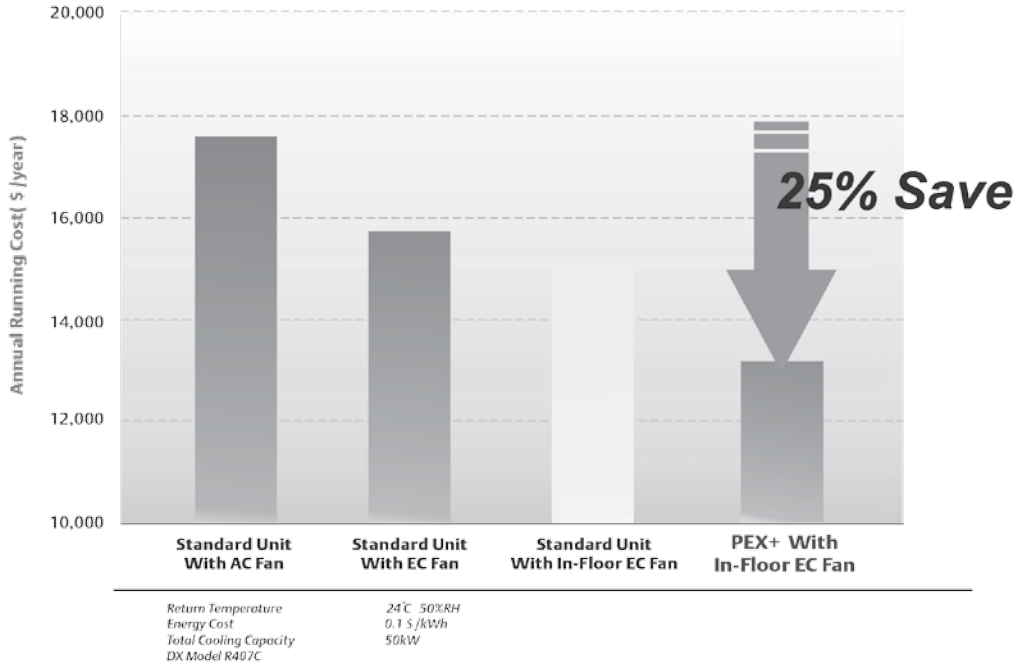

Key Features Towards High Efficiency

- Unique integrated aerodynamic airflow pattern
- New coil design with enhanced efficiency
- Larger evaporator and filters to further reduce pressure drop by 40%
- In-floor EC Fan configuration
- Less airflow restriction due to the separation of control and cooling cabinet
- Choice of Digital Scroll Compressor offers higher efficiency, adaptability and reliable operation

3



* *Upflow Air-Cooled Unit*

1 Scroll Compressor (Optional Digital Scroll)
More reliable and durable with a robust design, easy service and maintenance, operate at a lower sound and vibration level, higher efficiency over the entire operating range.

2 PTC Heater
Aluminium sheet mechanical sheet thermistor, features fast temperature rising speed, automatic regulation of air temperature and power consumption, safety and reliability.

3 Electronically-Commutated Fan (EC Fan)
Built by corrosion resistant aluminium wheel and permanent-magnet brushless DC motor within the rotor, variable speed control matched to the load, free-maintenance fan operation.

4 Thermal Expansion Valve (Optional EEV)
Automatically regulates the refrigerant flow to evaporator for performance optimization in the varying of temperature and pressure condition.

5 A-Frame or V-Frame Evaporator Coil
Larger frame coil design features optimise heat transfer efficiency and minimise air pressure drop, polymetric coating on coils protects against corrosion due to harsh environment, double-angled condensate tray for proper water drainage.

6 Infrared Humidifier
High-intensity quartz lamps shine on water creating instantaneous moisture using almost any water quality.



Innovation, Efficiency and Better Value Offerings

Modular Design Benefit

Unlike the legacy precision air conditioning unit, the latest Liebert® PEX+ model has higher efficiency to accommodate the energy efficient markets with even larger cooling capacity of 77.98 kW/m², thanks to its compact design.

The compact design in Liebert® PEX+ model features a combination of power/ control cabinet and cooling cabinet, which promotes front door service, easy installation and convenient transport by lift at site. This modular design also gives flexibility in future capacity expansion simply by adding the cooling cabinet.





EC Direct Drive Fan

- High efficiency, external rotor electronically commutated (EC) motor with integrated electronics
- True soft start characteristics
- Maintenance free design and construction
- High external static pressure (ESP) motor options available

All downflow units with EC fans are enabled to operate under an 'in-floor' fan configuration for providing the ultimate in energy saving. This feature increases the airflow velocity, thus the supply air is delivered to heat source effectively. Fans are pre-wired and easily lowered into the floor during unit positioning, without any assembly of other components.

Excellent Achievement In Smart Control Development by Emerson Network Power



The new Liebert® **PACC** controller, integrated into every Liebert® PEX+, enables the multiple units in a data centre to operate together intelligently to optimize the performance and efficiency. With this advanced microprocessor control system, you can have a variety of functions as follows:-

- Easy operation interface with multiple password protection
- Programming auto-restart operation after power is restored
- 200 historical records storage
- Operating hours calculation of most important components
- Malfunction diagnosis system for the ease of maintenance purpose

The microprocessor controller can monitor and configure the following parameters:

- Temperature setting is 18℃ - 32℃
- Humidity setting is 20%RH - 80%RH
- Supply air temperature setting limit is 8℃ - 30℃

The PACC control board allows a single point connection to interface up to 32 units in a local network. The PACC network provides a choice of Teamwork, Lead/ Lag and Cascade functions.

U2U Configuration

Rotation mode and auto standby mode.

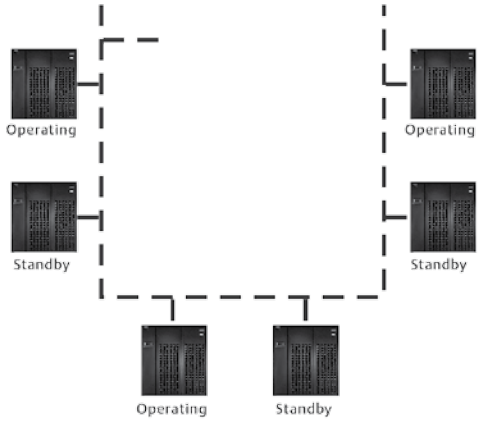

Teamwork

Operation mode of avoiding competition. Units work together to offer optimized cooling performance in an unbalanced load condition.

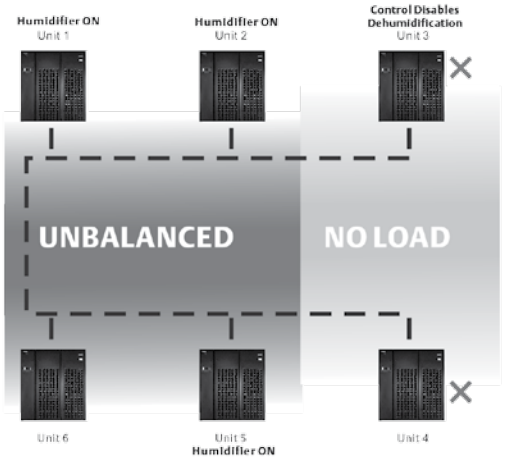



Energy Efficiency Optimization With Digital Scroll Technology



Digital technology provides a wide range of benefits to a scroll compressor compared to a standard compressor. At first a Digital Scroll is able to work at different partial loads without the use of an external inverter, thanks to its unique technological solution. Digital Scroll technology gives infinitely variable capacity modulation that easily adapts to changing load conditions while providing a precise temperature control. This approach is 30 percent more efficient than traditional hot-gas bypass.

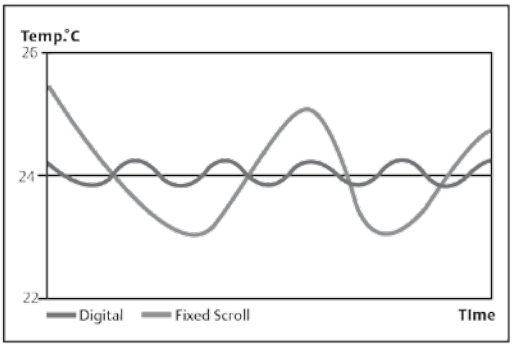

Comparison on Temperature Room Control between Fixed Scroll and Digital one.

Another important advantage is that, at partial load, a Digital Scroll doesn't work with ON-OFF configuration. This prevents peak in adsorbed power and reduces the motor stress on start-up. This will increase the unit's lifespan and reduce failure due to fatigue.

Due to its modulated mechanical operation, Digital Scroll system generates negligible electromagnetic interference during the loading and unloading state. It is safer for the critical equipments operating under such condition without any harmonic current distortion concern.

Digital Scroll Capacity Control Diagram

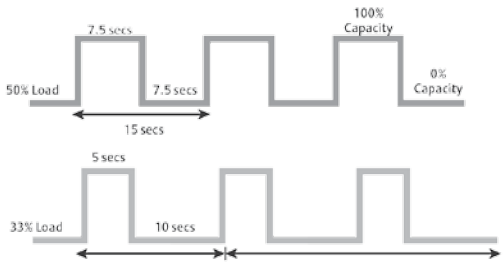

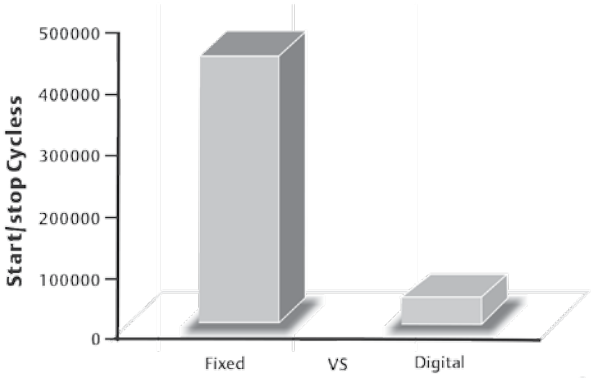

6



Liebert® PEX+ Configurations

Air-Cooled Model

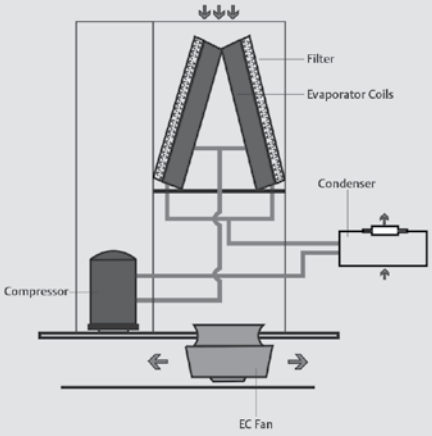

Chilled Water Model

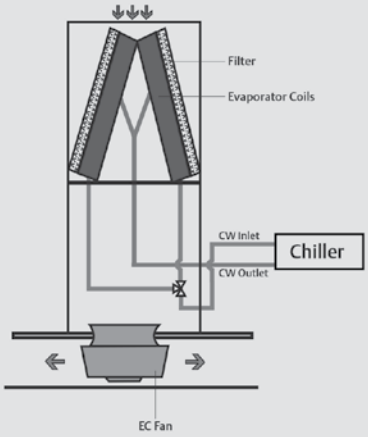

Downflow Unit



Upflow Unit



8

Technical data of the DOWNFLOW air-cooled unit (R407C)

Model	P1020 DA13C	P1025 DA13C	P1030 DA13C	P1035 DA13C	P1035 DA13S	P1040 DA13C	P1040 DA13S	P1050 DA13C	P1050 DA13S
Gross Cooling capacity and Sensible cooling capacity[1,2] (kW)									
Cooling capacity (24℃ DB 50%RH)	21.6	29.8	35.5	40.7	39.8	45.1	44.8	52.9	54.0
Sensible cooling capacity (24℃ DB 50%RH)	19.5	26.9	32.1	36.9	36.1	40.7	40.5	47.8	48.8
Fan[3]									
Standard air volume (m^3/h)	5500	6700	8000	9000	9000	10600	10600	12200	12200
Fan number	1	1	1	1	1	1	1	1	1
Fan power (kW)	0.7	1.0	1.7	2.3	2.3	1.5	1.5	1.8	1.8
Compressor[4]									
Number	1	1	1	1	2	1	2	1	2
Evaporator coil[5]									
Number	2	2	2	2	2	2	2	2	2
Electric heater[6]									
Power (kW)	6	6	6	6	6	9	9	9	9
Infrared humidifier									
Humidifying capacity (kg/h)	4.5	4.5	4.5	4.5	4.5	4.5	4.5	4.5	4.5
Humidifying pan	Stainless steel								
Filter[7]									
Number	1	1	4	4	4	4	4	4	4
Interface dimensions of indoor unit									
Liquid pipe ID (mm)	16	16	16	16	16	16	16	16	16
Liquid pipe number	1	1	1	1	2	1	2	1	2
Discharge pipe/water cooled air discharge pipe ID (mm)	22	22	22	22	22	22	22	22	22
Discharge pipe number	1	1	1	1	2	1	2	1	2
Infrared humidifier water in pipe OD (mm)	6.4	6.4	6.4	6.4	6.4	6.4	6.4	6.4	6.4
Condensation water drainage pipe (mm)	19	19	19	19	19	19	19	19	19
Dimension									
Unit dimension (W×D×H) (mm)	853×874×1970	853×874×1970	1130×995×1975	1130×995×1975	1130×995×1975	1330×995×1975	1330×995×1975	1330×995×1975	1330×995×1975
Weight									
Net weight (kg)	320	340	400	420	440	460	480	530	570
Electrical parameter									
FLA[8] (A)	28	33.2	32.8	35.7	33.6	43.2	42.4	48.2	51
Circuit breaker (A)	40	50	50	50	50	63	63	63	63

Notes: 1.For net capacities, deduct fan input power. Refer to the Liebert® PEX+ Rating for specific input conditions, air flow, and configuration.
2.The above cooling capacity is based on condensing temperature of 45℃.
3. The residual pressure out of units is 20Pa.
4.Scroll compressor, R407C refrigerant.
5.V type, copper tube, aluminium fin.
6.PTC heater
7.Based on ASHRAE52.1-1992,manual weighting method, the average filter efficiency is more than 90%,and the filter efficiency class is G4(EN779)
8.The full load current. The maximum full load current value of unit is not the sum of rated maximum full load current value of all components, but the sum of rated maximum full load current value of the operating components which may operate at the same time on the working condition of maximum load, including the current of outdoor unit.

Technical data of the DOWNFLOW air-cooled unit (R407C)

Model	P2060DA13S	P2070DA13S	P2080DA13S	P2090DA13S	P2100DA13S
Gross Cooling capacity and Sensible cooling capacity[1,2] (kW)					
Cooling capacity (24℃DB 50%RH)	71	78.4	89.6	99.8	105.8
Sensible cooling capacity (24℃DB 50%RH)	64.3	71	81	90.2	95.6
Fan[3]					
Standard air volume (m^3/h)	16000	18000	21200	24400	24400
Fan number	2	2	2	2	2
Fan power (kW)	3.5	4.6	3.0	3.7	3.7
Compressor[4]					
Number	2	2	2	2	2
Evaporator coil[5]					
Number	4	4	4	4	4
Electric heater[6]					
Power (kW)	9	9	12	12	12
Infrared humidifier					
Humidifying capacity (kg/h)	10	10	10	10	10
Humidifying pan	Stainless steel				
Filter[7]					
Number	8	8	8	8	8
Interface dimensions of indoor unit					
Liquid pipe ID (mm)	16	16	16	16	16
Liquid pipe number	2	2	2	2	2
Discharge pipe/water cooled air discharge pipe ID (mm)	22	22	22	22	22
Discharge pipe number	2	2	2	2	2
Infrared humidifier water in pipe OD (mm)	6.4	6.4	6.4	6.4	6.4
Condensation water drainage pipe (mm)	19	19	19	19	19
Dimension					
Unit dimension (W×D×H) (mm)	1830×995×1975	1830×995×1975	2230×995×1975	2230×995×1975	2230×995×1975
Weight					
Net weight (kg)	690	730	770	810	810
Electrical					
FLA[8] (A)	61.0	66.8	77.2	82.2	87.2
Circuit breaker (A)	80	80	100	100	125

Notes: 1. For net capacities, deduct fan input power. Refer to the Liebert® PEX+ Rating for specific input conditions, air flow, and configuration.
2. The above cooling capacity is based on condensing temperature of 45℃.
3. The residual pressure out of units is 20Pa.
4. Scroll compressor, R407C refrigerant.
5. V type, copper tube, aluminium fin.
6. PTC heater
7. Based on ASHRAE52.1-1992, manual weighting method, the average filter efficiency is more than 90%, and the filter efficiency class is G4(EN779)
8. The full load current. The maximum full load current value of unit is not the sum of rated maximum full load current value of all components, but the sum of rated maximum full load current value of the operating components which may operate at the same time on the working condition of maximum load, including the current of outdoor unit.

Technical data of the UPFLOW air-cooled unit (R407C)

Model	P1020 UA13C	P1025 UA13C	P1030 UA13C	P1035 UA13C	P1035 UA13S	P1040 UA13C	P1040 UA13S	P1050 UA13C	P1050 UA13S
Gross Cooling capacity and Sensible cooling capacity[1,2] (kW)									
Cooling capacity (24℃ DB 50%RH)	21.6	29.8	35.5	40.7	39.8	45.1	44.8	52.9	54.0
Sensible cooling capacity (24℃ DB 50%RH)	19.5	26.9	32.1	36.9	36.1	40.8	40.5	47.8	48.8
Fan[3]									
Standard air volume (m^3/h)	5500	6700	8000	9000	9000	10600	10600	12200	12200
Fan number	1	1	1	1	1	1	1	1	1
Fan power (kW)	0.8	1.2	1.9	2.5	2.5	1.8	1.8	2.2	2
Compressor[4]									
Number	1	1	1	1	2	1	2	1	2
Evaporator coil[5]									
Number	2	2	2	2	2	2	2	2	2
Electric heater[6]									
Power (kW)	6	6	6	6	6	9	9	9	9
Infrared humidifier									
Humidifying capacity (kg/h)	4.5	4.5	4.5	4.5	4.5	4.5	4.5	4.5	4.5
Humidifying pan	Stainless steel								
Filter[7]									
Number	1	1	4	4	4	4	4	4	4
Interface dimensions of indoor unit									
Liquid pipe ID (mm)	16	16	16	16	16	16	16	16	16
Liquid pipe number	1	1	1	1	2	1	2	1	2
Discharge pipe/water cooled air discharge pipe ID (mm)	22	22	22	22	22	22	22	22	22
Discharge pipe number	1	1	1	1	2	1	2	1	2
Infrared humidifier water in pipe OD (mm)	6.4	6.4	6.4	6.4	6.4	6.4	6.4	6.4	6.4
Condensation water drainage pipe (mm)	19	19	19	19	19	19	19	19	19
Dimension									
Unit dimension (W×D×H) (mm)	853×874×1970	853×874×1970	1130×995×1975	1130×995×1975	1130×995×1975	1330×995×1975	1330×995×1975	1330×995×1975	1330×995×1975
Weight									
Net weight (kg)	320	340	400	420	440	460	480	530	570
Electrical									
FLA[8] (A)	28	33.2	32.8	35.7	33.6	43.2	42.4	48.2	51
Circuit breaker (A)	40	50	50	50	50	63	63	63	63

Notes: 1.For net capacities, deduct fan input power. Refer to the Liebert® PEX+ Rating for specific input conditions, air flow, and configuration.
2.The above cooling capacity is based on condensing temperature of 45℃.
3. The residual pressure out of units is 50Pa.
4.Scroll compressor, R407C refrigerant.
5.V type, copper tube, aluminium fin.
6.PTC heater
7.Based on ASHRAE52.1-1992,manual weighting method, the average filter efficiency is more than 90%,and the filter efficiency class is G4(EN779)
8.The full load current. The maximum full load current value of unit is not the sum of rated maximum full load current value of all components, but the sum of rated maximum full load current value of the operating components which may operate at the same time on the working condition of maximum load, including the current of outdoor unit.

Technical data of the UPFLOW air-cooled unit (R407C)

Model	P2060UA13S	P2070UA13S	P2080UA13S	P2090UA13S	P2100UA13S
Gross Cooling capacity and Sensible cooling capacity[1,2] (kW)					
Cooling capacity (24℃DB 50%RH)	71	78.4	89.6	99.8	105.8
Sensible cooling capacity (24℃DB 50%RH)	64.3	71.1	81	90.3	95.7
Fan[3]					
Standard air volume (m^3/h)	16000	18000	21200	24400	24400
Fan number	2	2	2	2	2
Fan power (kW)	3.7	5	3.5	4.4	4.4
Compressor[4]					
Number	2	2	2	2	2
Evaporator coil[5]					
Number	4	4	4	4	4
Electric heater[6]					
Power (kW)	9	9	12	12	12
Infrared humidifier					
Humidifying capacity (kg/h)	10	10	10	10	10
Humidifying pan	Stainless steel				
Filter[7]					
Number	8	8	8	8	8
Interface dimensions of indoor unit					
Liquid pipe ID (mm)	16	16	16	16	16
Liquid pipe number	2	2	2	2	2
Discharge pipe/water cooled air discharge pipe ID (mm)	22	22	22	22	22
Discharge pipe number	2	2	2	2	2
Infrared humidifier water in pipe OD (mm)	6.4	6.4	6.4	6.4	6.4
Condensation water drainage pipe (mm)	19	19	19	19	19
Dimension					
Unit dimension (W×D×H) (mm)	1830×995×1975	1830×995×1975	2230×995×1975	2230×995×1975	2230×995×1975
Weight					
Net weight (kg)	690	730	770	810	810
Electrical					
FLA[8] (A)	61.0	66.8	77.2	82.2	87.2
Circuit breaker (A)	80	80	100	100	125

Notes: 1. For net capacities, deduct fan input power. Refer to the Liebert® PEX+ Rating for specific input conditions, air flow, and configuration.
2. The above cooling capacity is based on condensing temperature of 45℃.
3. The residual pressure out of units is 50Pa.
4. Scroll compressor. R407C refrigerant.
5. V type, copper tube, aluminium fin.
6. PTC heater
7. Based on ASHRAE52.1-1992, manual weighting method, the average filter efficiency is more than 90%, and the filter efficiency class is G4(EN779)
8. The full load current. The maximum full load current value of unit is not the sum of rated maximum full load current value of all components, but the sum of rated maximum full load current value of the operating components which may operate at the same time on the working condition of maximum load, including the current of outdoor unit.

Technical data of the DOWNFLOW chilled water unit

Model[1]	P1030D	P1040D	P1050D	P1060D	P2070D	P2080D	P2090D	P2100D	P2110D
Gross Cooling capacity and Sensible cooling capacity[2] (kW) based on Chilled Water Temperature 7℃ / 12℃									
Cooling capacity (24℃ DB 50%RH)	30.4	40.6	51.2	60.6	71.8	80.8	92.7	100.5	112.5
Sensible cooling capacity (24℃ DB 50%RH)	27	34.4	41.4	48.1	61	70.1	75.2	83.2	89.7
Cooling capacity (24℃ DB 45%RH)	27.6	36	47.6	56.3	63.8	72.5	85.1	94.3	103.2
Sensible cooling capacity (24℃ DB 45%RH)	27.6	36	43	49.9	63.8	72.5	77.6	87	92.6
Fan[3]									
Standard blast volume (m³/h)	9200	9600	10200	11200	17000	20400	18600	21300	21300
Number	1	1	1	1	2	2	2	2	2
Fan power (kW)	1.2	1.4	1.7	1.9	2.3	3.6	3	4.2	3.7
Electric heater									
Power (kW)	6	6	6	6	9	9	9	9	9
Infrared humidifier									
Humidifying amount (kg/h)	4.5	4.5	4.5	4.5	10	10	10	10	10
Humidifying water pan	Stainless steel								
Filter									
Number	4	4	4	4	8	8	8	8	8
Interface dimensions (Outer diameter)									
Chilled water in and out pipes (mm)	32	32	32	42	42	42	54	54	54
Infrared humidifier pipe (mm)	6.4	6.4	6.4	6.4	6.4	6.4	6.4	6.4	6.4
Condensation water drainage pipe (mm)	19	19	19	19	19	19	19	19	19
Chilled water supply requirement									
Inlet water flow (l/s) (24℃ DB 50%RH)	1.5	1.9	2.4	2.9	3.4	3.9	4.4	4.8	5.4
Pressure drop (kPa) (24℃ DB 50%RH)	52.1	59.8	97	69.4	63.1	79.1	75.5	88	99.7
Inlet water flow (l/s) (24℃ DB 45%RH)	1.3	1.7	2.3	2.7	3	3.5	4.1	4.5	4.9
Pressure drop (kPa) (24℃ DB 45%RH)	43.2	47.5	84.6	60.4	50.3	64.3	64.5	78.1	85
Dimension									
Unit dimension (W*D*H) (mm)	930*995*1975	930*995*1975	930*995*1975	930*995*1975	1680*995*1970	1680*995*1970	1680*995*1970	1680*995*1970	1830*995*1970
Weight									
Net weight (kg)	280	305	330	335	590	590	600	600	610
Electrical									
FLA[4] (A)	13.5	13.5	13.5	13.5	22.6	22.6	22.6	22.6	22.6
Circuit Breaker (A)	100	100	100	100	100	100	100	100	100

Notes : 1. The standard model is two-way valve, with three-way valve optional. Compression strength of the valve is 4000kPa.
2. For net capacities, deduct fan input power. Refer to the Liebert® PEX+ Rating for specific input conditions, air flow, and configuration.
3. The residual pressure out of units is 20Pa.
4. The full load current. The maximum full load current value is not the sum of rated full load current value of all components, but the sum of the rated maximum full load current of the operating components under the maximum power load operation.

Technical data of the DOWNFLOW chilled water unit

Model[1]	P2120D	P2130D	P2140D	P3150D	P3160D	P3170D	P3180D	P3190D	P3200D
Gross Cooling capacity and Sensible cooling capacity[2] (kW) based on Chilled Water Temperature 7℃ / 12℃									
Cooling capacity (24℃ DB 50%RH)	120.5	131	141.9	149.2	161.7	172.1	180.4	189.1	211.8
Sensible cooling capacity (24℃ DB 50%RH)	100.1	104.9	112	123.2	132.1	137.9	146	154.6	167.1
Cooling capacity (24℃ DB 45%RH)	112.3	120.9	130.1	138.9	150.4	157.9	167.7	177	194.2
Sensible cooling capacity (24℃ DB 45%RH)	104.3	108.5	115.3	128.3	137.4	142.3	151.7	161.3	172
Fan[3]									
Standard blast volume (m^3/h)	25900	24800	25600	31400	33100	33000	35500	38200	38200
Number	2	2	2	3	3	3	3	3	3
Fan power (kW)	4.8	4.5	4.9	5.9	5.8	5.9	5.8	6.9	7.1
Electric heater									
Power (kW)	9	9	9	12	12	12	12	12	12
Infrared humidifier									
Humidifying amount (kg/h)	10	10	10	10	10	10	10	10	10
Humidifying water pan	Stainless steel								
Filter									
Number	8	8	8	12	12	12	12	12	12
Interface dimensions (Outer diameter)									
Chilled water in and out pipes (mm)	54	54	54	66.8	66.8	66.8	66.8	66.8	66.8
Infrared humidifier pipe (mm)	6.4	6.4	6.4	6.4	6.4	6.4	6.4	6.4	6.4
Condensation water drainage pipe (mm)	19	19	19	19	19	19	19	19	19
Chilled water supply requirement									
Inlet water flow (l/s) (24℃ DB 50%RH)	5.7	6.2	6.8	7.1	7.7	8.2	8.6	9	10.1
Pressure drop (kPa) (24℃ DB 50%RH)	113.7	94.4	110	84.1	89.6	100.7	110.2	120.5	104.6
Inlet water flow (l/s) (24℃ DB 45%RH)	5.4	5.8	6.2	6.6	7.2	7.5	8	8.4	9.3
Pressure drop (kPa) (24℃ DB 45%RH)	99.8	81.1	93.4	73.8	78.5	85.9	96.2	106.6	88.9
Dimension									
Unit dimension (W×D×H) (mm)	1830×995×1970	1830×995×1970	1830×995×1970	2505×995×1970	2730×995×1970	2730×995×1970	2730×995×1970	2730×995×1970	2730×995×1970
Weight									
Net weight (kg)	660	710	760	860	875	890	890	895	970
Electrical									
FLA[4] (A)	22.3	22.3	22.3	31.5	31.5	31.5	31.1	31.1	31.1
Circuit Breaker (A)	100	100	100	100	100	100	100	100	100

Notes : 1.The standard model is two-way valve, with three-way valve optional. Compression strength of the valve is 4000kPa.
2.For net capacities, deduct fan input power. Refer to the Liebert® PEX+ Rating for specific input conditions, air flow, and configuration.
3.The residual pressure out of units is 20Pa.
4.The full load current. The maximum full load current value is not the sum of rated full load current value of all components, but the sum of the rated maximum full load current of the operating components under the maximum power load operation.

Technical data of the UPFLOW chilled water unit

Model[1]	P1030U	P1040U	P1050U	P1060U	P2070U	P2080U	P2090U	P2100U	P2110U
Gross Cooling capacity and Sensible cooling capacity[2] (kW) based on Chilled Water Temperature 7℃ / 12℃									
Cooling capacity (24℃ DB 50%RH)	30.4	40.6	51.2	60.6	71.8	80.8	92.7	100.5	112.5
Sensible cooling capacity (24℃ DB 50%RH)	27	34.4	41.4	48.1	61	70.1	75.2	83.2	89.7
Cooling capacity (24℃ DB 45%RH)	27.6	36	47.6	56.3	63.8	72.5	85.1	94.3	103.2
Sensible cooling capacity (24℃ DB 45%RH)	27.6	36	43	49.9	63.8	72.5	77.6	87	92.6
Fan[3]									
Standard blast volume (m³/h)	9200	9600	10200	11200	17000	20400	18600	21300	21300
Number	1	1	1	1	2	2	2	2	2
Fan power (kW)	1.4	1.6	1.9	2.1	2.8	4.3	3.6	5	4.4
Electric heater									
Power (kW)	6	6	6	6	9	9	9	9	9
Infrared humidifier									
Humidifying amount (kg/h)	4.5	4.5	4.5	4.5	10	10	10	10	10
Humidifying water pan	Stainless steel								
Filter									
Number	4	4	4	4	8	8	8	8	8
Interface dimensions (Outer diameter)									
Chilled water in and out pipes (mm)	32	32	32	42	42	42	54	54	54
Infrared humidifier pipe (mm)	6.4	6.4	6.4	6.4	6.4	6.4	6.4	6.4	6.4
Condensation water drainage pipe (mm)	19	19	19	19	19	19	19	19	19
Chilled water supply requirement									
Inlet water flow (l/s) (24 ℃ DB 50%RH)	1.5	1.9	2.4	2.9	3.4	3.9	4.4	4.8	5.4
Pressure drop (kPa) (24 ℃ DB 50%RH)	52	57.2	97	69.4	63.1	79.1	75.5	88	99.7
Inlet water flow (l/s) (24 ℃ DB 45%RH)	1.3	1.7	2.3	2.7	3	3.5	4.1	4.5	4.9
Pressure drop (kPa) (24 ℃ DB 45%RH)	43.1	47.5	84.6	60.4	50.3	64.3	64.5	78.1	85
Dimension									
Unit dimension (W*D*H) (mm)	930*995*1975	930*995*1975	930*995*1975	930*995*1975	1680*995*1970	1680*995*1970	1680*995*1970	1680*995*1970	1830*995*1970
Weight									
Net weight (kg)	280	305	330	335	590	590	600	600	610
Electrical									
FLA[4] (A)	13.5	13.5	13.5	13.5	22.6	22.6	22.6	22.6	22.6
Circuit Breaker (A)	100	100	100	100	100	100	100	100	100

Notes : 1.The standard model is two-way valve, with three-way valve optional. Compression strength of the valve is 4000kPa.
2.For net capacities, deduct fan input power. Refer to the Liebert® PEX+ Rating for specific input conditions, air flow, and configuration.
3.The residual pressure out of units is 50Pa.
4.The full load current. The maximum full load current value is not the sum of rated full load current value of all components, but the sum of the rated maximum full load current of the operating components under the maximum power load operation.

Technical data of the UPFLOW chilled water unit

Model[1]	P2120U	P2130U	P2140U	P3150U	P3160U	P3170U	P3180U	P3190U	P3200U
Gross Cooling capacity and Sensible cooling capacity[2] (kW) based on Chilled Water Temperature 7℃ / 12℃									
Cooling capacity (24℃ DB 50%RH)	120.5	131	138	149.2	161.7	172.1	180.4	189.1	207
Sensible cooling capacity (24℃ DB 50%RH)	100.1	104.9	108.4	123.2	132.1	137.9	146	154.6	162.6
Cooling capacity (24℃ DB 45%RH)	112.3	120.9	126.5	138.9	150.4	157.9	167.7	177	189.8
Sensible cooling capacity (24℃ DB 45%RH)	104.3	108.5	111.5	128.3	137.4	142.3	151.7	161.3	167.3
Fan[3]									
Standard blast volume (m³/h)	25900	24800	24600	31400	33100	33000	35500	38200	36900
Number	2	2	2	3	3	3	3	3	3
Fan power (kW)	5.2	5.3	5.3	7.2	7.0	7.1	7.3	7.9	8.0
Electric heater									
Power (kW)	9	9	9	12	12	12	12	12	12
Infrared humidifier									
Humidifying amount (kg/h)	10	10	10	10	10	10	10	10	10
Humidifying water pan	Stainless steel								
Filter									
Number	8	8	8	12	12	12	12	12	12
Interface dimensions (Outer diameter)									
Chilled water in and out pipes (mm)	54	54	54	66.8	66.8	66.8	66.8	66.8	66.8
Infrared humidifier pipe (mm)	6.4	6.4	6.4	6.4	6.4	6.4	6.4	6.4	6.4
Condensation water drainage pipe (mm)	19	19	19	19	19	19	19	19	19
Chilled water supply requirement									
Inlet water flow (l/s) (24℃ DB 50%RH)	5.7	6.2	6.6	7.1	7.7	8.2	8.6	9	9.9
Pressure drop (kPa) (24℃ DB 50%RH)	113.7	94.4	104.3	84.1	89.6	100.7	110.2	120.5	100.3
Inlet water flow (l/s) (24℃ DB 45%RH)	5.4	5.8	6	6.6	7.2	7.5	8	8.4	9
Pressure drop (kPa) (24℃ DB 45%RH)	99.8	81.1	88.5	73.8	78.5	85.9	96.2	106.6	85.1
Dimension									
Unit dimension (W×D×H) (mm)	1830×995×1970	1830×995×1970	1830×995×1970	2505×995×1970	2730×995×1970	2730×995×1970	2730×995×1970	2730×995×1970	2730×995×1970
Weight									
Net weight (kg)	660	710	760	860	875	890	890	895	970
Electrical									
FLA[4] (A)	22.3	22.3	22.3	31.5	31.5	31.5	31.1	31.1	31.1
Circuit Breaker (A)	100	100	100	100	100	100	100	100	100

Notes : 1.The standard model is two-way valve, with three-way valve optional. Compression strength of the valve is 4000kPa.
2.For net capacities, deduct fan input power. Refer to the Liebert® PEX+ Rating for specific input conditions, air flow, and configuration.
3.The residual pressure out of units is 50Pa.
4.The full load current. The maximum full load current value is not the sum of rated full load current value of all components, but the sum of the rated maximum full load current of the operating components under the maximum power load operation.



SUPPORT

Maximizing the performance and effciency of your data center's precision air conditioning units and other critical power systems require they be properly maintained by factory-trained technicians.

Emerson Network Power, Liebert® Services is the only service organization in the world that has been factory trained on Liebert® cooling equipment and is continuously supported and updated by the engineers who built the equipment.

Our Customer Engineers have a better knowledge of how to maintain Liebert® equipment and integrate it into the overall data center infrastructure support strategy than any service provider.

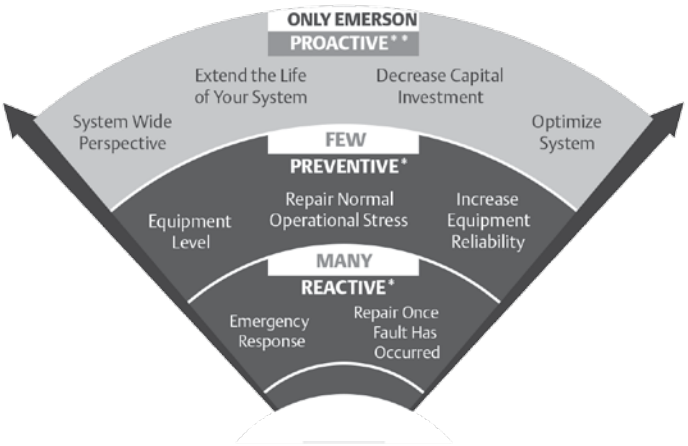

The Emerson Difference

Many services organizations can perform basic repair activities and maintain equipment at some level of competency, but Emerson Network Power services can take your critical maintenance to the next level - proactive maintenance that can significantly extend the life of your thermal management systems.

Emerson Network Power, Liebert® Services

Industry Experience
As long as data centers have existed, Liebert® Services has been supporting data center infrastructures and providing integrated services for mission-critical environments.

System Wide Expertise
Nobody understands Liebert® power equipment, precision cooling units and electrical infrastructure better than the experts at Liebert® Services.

Technical Expertise
Our knowledge of systems and how they integrate into your overall facility makes us uniquely qualifed to apply the latest technology and best practices to your power, precision cooling, and battery systems.

Unparalleled Responsiveness
With Liebert® Services, you have 24/7 access to a network of data center infrastructure specialists armed with the knowledge and parts to resolve your problems. Anytime. Anywhere.

Fast, Efficient Problem Resolution
Only Liebert® Services offers the right combination of industry, system, and technical expertise along with the extensive resources necessary to identify and understand any data center need and provide proactive solutions.

Guide Specifications

GENERAL Summary

These specifications describe requirements for a Mission Critical Cooling system. The system shall be designed to control temperature and humidity conditions in rooms containing electronic equipment, with good insulation and vapour barrier. The manufacturer shall design and furnish all equipment to be fully compatible with heat dissipation requirements of the room.

PRODUCT Design Requirements

The Mission Critical Cooling system shall be a Liebert PEX air-cooled series air conditioner model _____ self-contained factory assembled
unit with (upflow) (downflow) air delivery. The system shall have a total cooling capacity of _____ kW, with a sensible cooling capacity of _____ kW, based on an entering air temperature of ____ °C dry bulb and ____ °C wet bulb. The unit is to be supplied with ____ volt ___ ph ___Hz electrical service and include a rating nameplate stating the unit RFLA.

Cabinet Construction

The frame shall be constructed of 2.5, 2.0 and 1.2 mm folded galvanised steel. The exterior panels shall be constructed of 1.2 mm zinc coated sheet steel and insulated with foam insulation. The cabinet shall be powder coated in Charcoal Grey colour and have a textured finish. The hinged front doors shall be removeable and include captive 1/4 turn fasteners. The cabinet shall be constructed to provide ease of disassembly & reassembly for difficult access sites..

Filtration

The filter panels shall be an integral part of the system and withdrawable from the front of the unit. Filtration shall be provided by deep V form, dry disposable media housed in a metal frame. The rated efficiency shall be to EU4/MERV8 Standards

Direct Expansion DX - EC fans

The fan section shall be designed for _____ m^3/h at an external static pressure of ____ Pa. The unit shall be fitted with one (two,three) direct-driven, high efficiency, single inlet, backward curved, centrifugal 'plug' type fan(s), with aluminium nozzle(s) and impeller(s). The fan motors shall be Electronically Commutated (EC), IP54, with internal protection and speed regulation via controller signal. They shall be statically and dynamically balanced.

Direct Expansion DX - FC fans

The fan section shall be designed for____m^3/h at an external static pressure of ___Pa. The unit shall be fitted with one (two, three) belt driven, forward curve (FC) centrifugal type, double width, double inlet fan(s). Each fan shall be separately driven by an electric motor rated at ___kW at ____RPM with an IP 55 enclosure rating. The Drive arrangement shall be auto self tensioning and provide for belt replacement without the use of tools. They shall be statically and dynamically balanced.

Humidifier

A humidifier shall be factory installed inside the unit. Bypass air shall be used to enable moisture to be absorbed into the bypass airstream without condensation. The humidifier capacity shall be ____ kg/hr (lb/hr). The humidifier shall be serviceable and removable from the front of the unit.

Infrared Humidifier

The humidifier shall be of the infrared type consisting of high intensity quartz lamps mounted above and out of the water supply. The humidifier pan shall be stainless steel and arranged to be removeable without disconnecting high voltage electrical connections. The complete humidifier section shall be pre-piped, ready for

shall have an adjustable water-overfeed to prevent mineral precipitation. A high-water detector shall shut down the humidifier to prevent overflowing. Full capacity operation shall be achieved within 10 sec from cold start.

Electric Heating

Electric heating shall be provided in a single stage. The elements shall be low watt density, 304/304 stainless steel fin tubular construction, protected by thermal safety switches. The heating system shall include dual safety protection through loss of air and manual reset high temperature controls. Grounded current detector can be optional.

Optional 2nd Stage Electric Heating

Electric heating shall be provided in two equal stages. The elements shall be low watt density, 304/304 stainless steel fin tubular construction, protected by thermal safety switches. The heating system shall include dual safety protection through loss of air and manual reset high temperature controls.

Compressorised Systems Scroll Compressor

The compressor shall be of the high efficiency Compliant Scroll design, with an E.E.R. (energy efficiency ratio) of not less than ____ BTUH/watt (C.O.P. of not less than ____) at ARI rating conditions. The compressor shall be charged with lubricating oil and designed for operation on relevant refrigerant. Each compressor shall have internal motor protection and be mounted on vibration isolators.

Refrigeration Circuit

The refrigeration system shall be of the direct expansion type with two cooling stages and incorporate one or two hermetic scroll compressors, complete with crankcase heaters and rotalock connections. A hot gas bypass solenoid valve shall be used on single compliant scroll compressor models. The system shall include a auto reset high pressure control, auto reset low pressure switch, externally equalised thermal expansion valve, high sensitivity refrigerant sight glass, large capacity filter drier with rotalock connections and charging/access ports in each circuit.

Thermal Expansion Valve

To provide quick and accurate Refrigerant system set up and calibration the thermal expansion valve (TXV) shall be accessible to allow system set up and calibration while the unit is running.

Evaporator Coil

The evaporator coil shall be a V-coil (for upflow) / A-coil (for downflow) incorporating draw-through air design for uniform air distribution. The coil shall be constructed of enhanced surface aluminium fins mechanically bonded to enhanced surface copper tubes. The coil frame is fabricated from Hot dipped galvanized sheetmetal and the stainless steel condensate drip tray. The evaporator drain tray shall incorporate double sloped gutters for condensate removal. The cooling coil shall be a maximum of 7 rows and 550 fins per metre (14 FPI).

Dehumidification - FC Fan Compliant Scroll Compressor Air Cooled Units

A specific dehumidification cycle (split-suction) shall operate by reducing the operating surface temperature in a section of the refrigeration coil by means of a solenoid valve on the suction header. Room loads as low as (40% for 2 compressor models) (70% for 1 compressor models) of the unit sensible cooling capacity shall be supported during dehumidification without the need for larger capacity or additional heating stages. Dehumidification shall be deactivated when the return air temperature drops below a predefined value.

Dehumidification - EC Fan Air Cool Units

A specific dehumidification cycle shall operate by reducing airflow to lower the surface temperature of the evaporator/cooling coil below the return air dewpoint condition.

Air Cooled Systems

The indoor evaporator unit shall include refrigerant piping, with a factory holding charge of Nitrogen. Each refrigeration circuit shall include rigidly mounted isolation valves in the discharge and liquid lines to aid

Remote Air Cooled Condenser

The model LS(D)F ___ factory matched air cooled condensers shall be the low profile, weatherproof type incorporating high efficiency, direct drive, external rotor motors with axial blade fans. The condenser shall balance the heat rejection of the compressor at ___°C ambient. The condenser shall be constructed from heavy duty aluminium and corrosion resistant components. Heavy duty mounting legs and all assembly hardware shall be included. Condensers shall be suitable for 24 hour operation and be capable of providing vertical or horizontal discharge. The condenser shall be fully factory wired to an input isolator and require ___ volt 3 phase ___Hz electrical service.

The high performance heat exchanger condenser shall include mechanically expanded enhanced surface copper tubes and aluminium fins for efficient heat transfer.

The coil shall be have a maximum of __ rows and ____ fins per metre (__ FPI).

Fan Speed Control Condenser

The condenser fans shall be directly driven by __ pole ____ rpm ___ volt ___ Hz electric motors with an IP54 enclosure rating and class F insulation. The motors shall be equipped with permanently sealed ball bearings and high temperature grease. The motors shall be speed controlled to ensure stable operating conditions from -20°C to +45°C ambient by a factory fitted, direct acting pressure actuated electronic fan speed controller. The control system shall be complete with input isolator, transducers and electrical wiring.

Unit Size Compressorised Systems

The maximum footprint area of the unit shall not exceed:

0.75 m^2 up to 35 kW

1.50 m^2 above 50 and up to 70 kW

2.25 m^2 above 90 and 100 kW

The unit shall require 850 mm front access only for routine service and installation work.

ALL SYSTEMS Water Under Floor Sensor

Each unit shall be supplied with a single water under floor point detector as standard. The sensor shall signal a water under floor alarm to the controller upon detecting water.

PACC Microprocessor Control with SMALL Graphic Display

The PACC unit control shall be factory-set for Intelligent Control which uses "fuzzy logic" and "expert systems" methods. Proportional and Tunable PID shall also be user selectable options. Internal unit component control shall include the following:

Compressor Short Cycle Control

Prevents compressor short-cycling and needless compressor wear

System Auto Restart

The auto restart feature will automatically restart the system after a power failure. Time delay is programmable

Sequential Load Activation

On initial startup or restart after power failure, each operational load is sequenced with a minimum of one second delay to minimize total inrush current

Predictive Humidity Control

Calculates the moisture content in the room and prevents unnecessary humidification and dehumidification cycles by responding to changes in dew point temperature

The PACC control shall be compatible with all Liebert remote monitoring and control devices. Options are available for BMS interface via MODbus, BACNet and SNMP.

The PACC control processor shall be microprocessor based with a 128x64 dot matrix graphic front monitor display and control keys for user inputs mounted in an ergonomic, aesthetically pleasing housing. The controls

The system shall display user menus for: active alarms, event log, graphic data, unit view/status overview (including the monitoring of room conditions, operational status in % of each function, date and time), total run hours, various sensors, display setup and service contacts. A password shall be required to make system changes within the service menus. Service menus shall include: setpoints, standby settings (lead/lag), timers/ sleep mode, alarm setup, sensor calibration, maintenance/wellness settings, options setup, system/network setup, auxiliary boards and diagnostics/service mode. A password shall be required to access the advanced menus.

User Menus Shall be Defined as Follows:

Active Alarms

Unit memory shall hold the 200 most recent alarms with time and date stamp for each alarm

Event Log

Unit memory shall hold the 400 most recent events with id number, time and date stamp for each event

Graphic Data View

Two graphic records shall be available: return air temperature and return air humidity

Unit View - Status Overview

Simple or Graphical. Unit View summary displays shall include temperature and humidity values, active functions (and percent of operation) and any alarms of the host unit.

Total Run Hours

Menu shall display accumulative component operating hours for major components including compressors, fan motor, humidifier and reheat

Display Setup

Customer shall pre-select the desired grouping of display languages at the time of the order from the following choices: English, French, Italian, Spanish, German, Portuguese, Russian, Czech and Chinese

Service Contacts

Menu shall allow display of local service contact details.

Service Menus Shall be Defined as Follows:

Setpoints

Menu shall allow setpoints within the following ranges:

- Temperature Setpoint 18-29°C
- Temperature Sensitivity 0.6-5.6°C
- Humidity Setpoint 20-80% RH*
- Humidity Sensitivity 1-30% RH
- High Temperature Alarm 2-32°C
- Low Temperature Alarm 2-32°C
- High Humidity Alarm 15-85% RH
- Low Humidity Alarm 15-85% RH

** The microprocessor may be set within these ranges, however the unit may not be able to control to extreme combinations of temperature and humidity.*

Standby Settings/Lead-Lag

Menu shall allow planned rotation or emergency rotation of operating and standby units.

Timers/Sleep Mode

Menu shall allow various customer settings for turning on/off unit.

Alarm Setup

- Low Temperature
- High Humidity
- Low Humidity
- Compressor Overload (Optional)
- Main Fan Overload (Optional)
- Humidifier Problem
- High Head Pressure
- Change Filter
- Fan Failure
- Low Suction Pressure
- Unit Off

Audible Alarm

The audible alarm shall annunciate any alarm that is enabled by the operator.

Common Alarm

A programmable common alarm shall be provided to interface user selected alarms with a remote alarm device.

Remote Monitoring

All alarms shall be communicated to the Liebert monitoring system with the following information: Date and time of occurrence, unit number and present temperature and humidity.

Sensor Calibration

Menu shall allow unit sensors to be calibrated with external sensors.

Maintenance/Wellness Settings

Menu shall allow reporting of potential component problems before they occur.

Options Setup

Menu shall provide operation settings for the installed components.

System/Network Setup

Menu shall allow Unit-to-Unit (U2U) communication and setup for teamwork modes of operation (up to 32 units).

Teamwork Modes of Operation

Saves energy by preventing operation of units in opposite modes multiple units.

Auxiliary Boards

Menu shall allow setup of optional expansion boards.

Diagnostics/Service Mode

Control input and output values and status shall be displayed to aid in unit diagnostics and troubleshooting. Control inputs shall be indicated as on or off at the front display. Control outputs shall be able to be turned on or off from the front display without using jumpers or a service terminal. Each control output shall be indicated by an LED on a circuit board.

Advanced Menus

Factory Settings

Configuration settings shall be factory-set based on the pre-defined component operation.

UNIT OPTIONS

PACC Microprocessor Control With LARGE Graphic Display

The PACC unit control with large graphic display shall include all of the features as the PACC with small graphic display, except that it includes a larger graphical display and shall include the additional features of: "System View", Spare Parts List, Unit Diary

display panel and control keys for user inputs mounted in an ergonomic, aesthetically pleasing housing.

System View - Status Overview

"System View" shall display a summary of operation for the total number of operating units within a Unit-to-Unit(U2U) configuration.

Unit Diary

Menu shall include a free field area within the unit memory where unit history may be stored for reference.

PACC Wall Mount LARGE Graphic Display

The PACC Large Graphic Display Kit shall include an ergonomic, aesthetically pleasing housing, a 320x240 dot matrix graphic display and a 230V (120V) power supply. The Wall Mount Large Graphic Display shall be used to allow remote location of a "System View" display and all features of the Large Graphic User, Service and Advanced menus for use with Liebert PACC controlled products connected for Unit-to-Unit (U2U) communications.

vNSA Network Switch

The vNSA network switch is designed to connect multiple PACC equipped cooling units to form a network and allow the units to communicate and function as a team. Available with or without a Large Graphics Display, the vNSA can support up to 14 Small Graphics Display units. Supplied in a wall mount enclosure with key lock. The vNSA requires 100-240VAC single phase power for proper operation. A universal power supply (12V, 1.5A) is installed inside the enclosure, with a hard-wired connection for 120V or 230V operation.

IntelliSlot WEB Card

The Liebert IntelliSlot Web card provides HTTP browsing, SNMP and WEB-management capability of Liebert PEX units within your Network Management System (NMS).

IntelliSlot 485 Card

The Liebert IntelliSlot 485 card provides BMS management of Liebert PEX air-cooled series air conditioner units over EIA-485 via Modbus RTU
or Liebert's proprietary protocol for SiteLink connectivity.

PACC Ethernet Cable

Certified CAT5e patch cable with fully moulded ends used for connecting an PACC to a network switch. Available in lengths of 10, 15, 20 and 30 metres (33, 50, 65 and 100 feet).

PACC Ethernet Crossover Cable

Certified CAT5e crossover cable with fully moulded ends for networking 2 Small Graphics Display PACC units together are available in lengths of 10, 20 and 30 metres.

PACC - Do Card Option

PACC - DO card option provides alarm and status outputs for your PEX unit.

Long Line Pipe Kit Option (LLVS) - Air Cooled Systems

A factory fitted liquid line solenoid valve and field installed non-return valve (supplied loose) shall be provided for each refrigeration circuit to prevent liquid refrigerant migration to the evaporator/compressor during off cycles in air cooled installations. *Note: Mandatory for pipe runs in excess of 30 metres.*

Reheat/Humidifier Lockout (Emergency Power Lockout)

A field supplied 24VAC source to field wiring terminals in the electrical panel will lockout the electric heaters and humidifier.

Common Alarm Terminals (Additional)

Extends the standard single common alarm terminal to a total of three (3) voltage independant common alarm terminals (normally open) for remote unit alarm indication. Contacts rated at 24VAC 3 amps.

Liquitect Unit Shutdown Sensor (LT410)

The floor stand shall be constructed from welded galvanised steel. The floor stand shall have adjustable legs and be _____ mm high.

Upflow Unit Plenum with Discharge Grille(s)

The air plenum shall be constructed from 1.2mm zinc coated sheet steel and powder coated in Charcoal Grey colour with a textured finish. The plenum shall be 600mm high or for low ceiling heights an optional 400mm plenum. Double deflection discharge grilles made from aluminium and powder coated black shall be fitted to the front panels.

Air Cooled Condenser Corrosion Protection

A high performance, corrosion resistant pre-coated fin option can be provided for harsh environmental applications. The coating shall have negligible effect on the heat transfer performance

This page is intentionally left blank.

Liebert® PCW

Cool the Cloud

Why You Should Choose Liebert® PCW Over Competitive Precision Systems

Liebert® PCW for data centers using chilled water as cooling fluid typically range from 50kW up to 260kW. It offers the impressive energy saving performance, higher system availability and lower total costs of ownership when it forms part of an integrated data center solution. The Liebert® PCW unique, cutting-edge technology delivers the cooling capacity required by the servers to ensure business continuity. Today's IT infrastructures, facing dynamic loads, have to rely on trust worthy cooling solutions, performing at their best whatever the circumstances.



Liebert® PCW: Precision Cooling Technology Serving the Cloud

- **The evolution of virtualization technologies** has enabled data center managers to maximize resource allocation and agility by consolidating multiple applications onto a single server. The maturity of virtualization technology has facilitated the development of robust, virtualized network architectures - "clouds" - where resources are leveraged to provide on-demand, at scale access to a variety of abstract IT resources.
- **From a business perspective, the ability to scale** infrastructure resources to support rapid growth whilst ensuring business efficiency, is critical. Because the cloud's virtualization technology facilitates a dynamic computing environment within a "static" foundation (the server), rapid changes in computing load translate to substantial increases in power consumption and the need for adequate heat dissipation. If not managed adequately, this can place the additional stress on the data center's infrastructure, resulting in an increased risk of system failures. Recognizing vulnerabilities of existing facilities before embarking on a cloud deployment gives the opportunity to potential cloud computing adopters to strengthen critical systems.
- **Maintaining optimum availability is essential.** Increased rack densities coupled with high computing loads may result in "hot spots" which have the potential to impact the availability of virtualized servers, if not managed correctly. For this reason enterprises must ensure that critical systems are backed up with adequate cooling support optimized for virtualized, high-density environments.

Liebert® PCW: Cloud-Ready Precision Cooling for Maximum Energy Saving

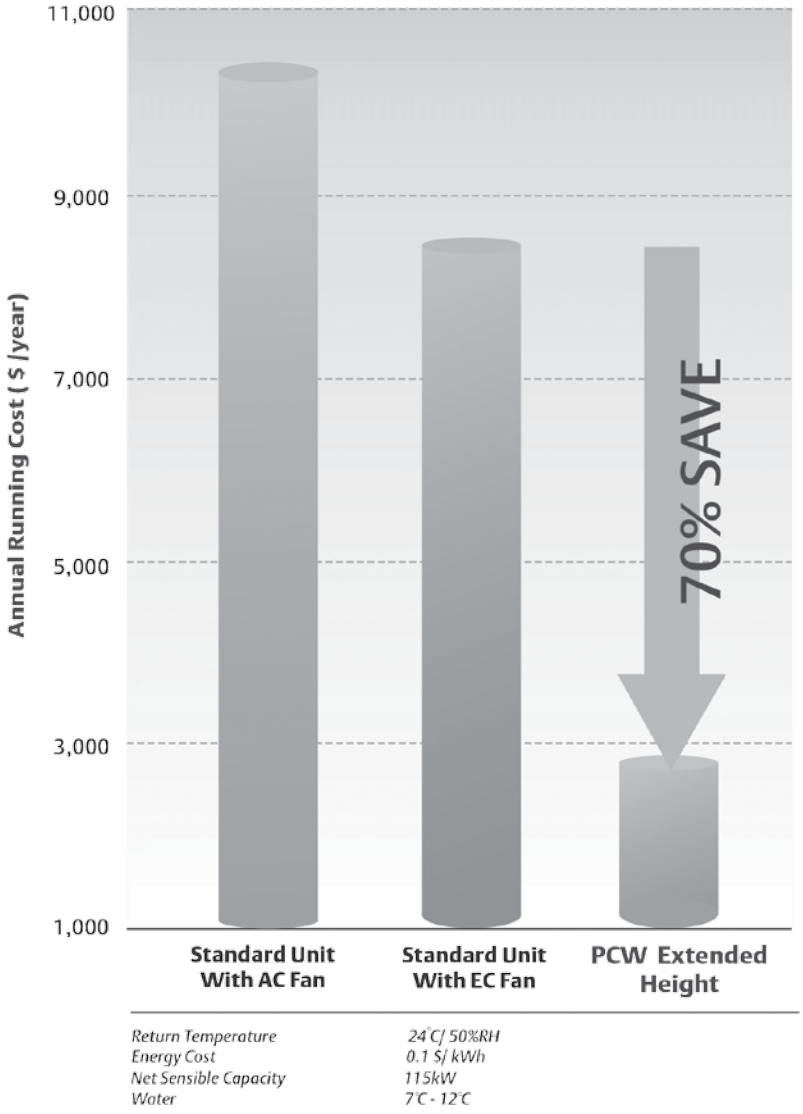

Key Features

- Unique integrated aerodynamic design to reduce fan power consumption
- New coil design with enhanced efficiency
- Larger coil and filters to further reduce pressure drop
- EC fans located on the raised floor

Liebert® PCW: Optimized Components Offer Efficient and Effective Solution



High Efficiency

As a result of the optimized aerodynamic design (minimum internal pressure drops) and the in-floor EC fan configuration, Liebert® PCW can perfectly give the right cooling to the server heat load with minimum power consumption.



Liebert® EC Fan

The new generation of fans are the core of the Liebert® PCW, dramatically reducing the noise and increasing the efficiency of the unit.



Unit Aeraulic Design Efficiency

Liebert® PCW, the ultimate novelty in precision cooling design, presents a unique inner aerodynamic architecture - from the coil angle to the electrical panel - achieving an outstanding competitive advantage and state-of-the-art efficiency.



Cooling and Power Energy Meters

Measurement is key to control. The accurate metering provided by Liebert® PCW gives users the advantage of controlling the cooling capacity, the power input and all the parameters that simplify the management of the data center, thus ensuring continued infrastructure cooling even in the unlikely event of a unit failure.



Infrared Humidifier - The Efficient Humidification Technology

This efficient humidification technology requires less maintenance, operates effectively using almost any water quality and provides fast response of humidification. The electrode boiler humidifier is an option made available.

Intelligent Control Liebert® iCOM

Liebert® iCOM is a control software in continuous evolution. The iCOM device features a special control algorithm to maintain the top reliability in all conditions and also enables communication between multiple Liebert® PCW units for synchronized operation towards higher efficiency. With this advanced control technology integration, you can take a variety of advantages.

Smart Control Methods

- Return air temperature is a traditional method that adjusts the unit capacity based on the return air temperature to the unit
- Supply air temperature is a method that adjusts the unit capacity based on the outlet air temperature to the heat sources
- Static pressure control uses a single pressure sensor to modulate the fan speed

Intelligent Monitoring and Communication

- Precise control of temperature and humidity
- Automatic action upon specified alerts and thresholds
- Wellness calculation and reporting facilitate optimization, fault measurements and service support.
- Unit-to-Unit Communication allows lead/lag and optional teamwork settings for control of up to 32 units in a group for better performance
- Smart Aisle™ applications (Cold Aisle Containment) meeting the actual cooling and airflow demands of servers without wasting a single Watt on unnecessary cooling

U2U Configuration

Rotation mode and auto standby mode.

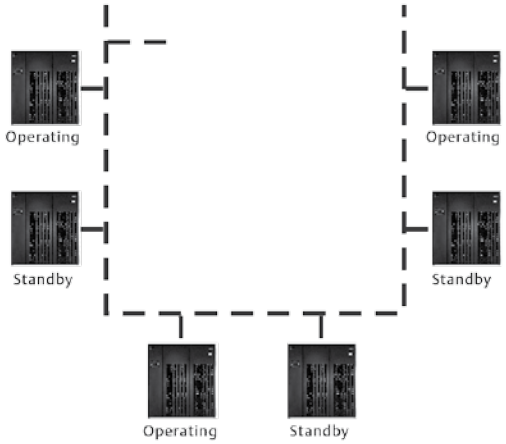

Teamwork

Operation mode of avoiding competition. Units work together to offer optimized cooling performance in an unbalanced load condition.

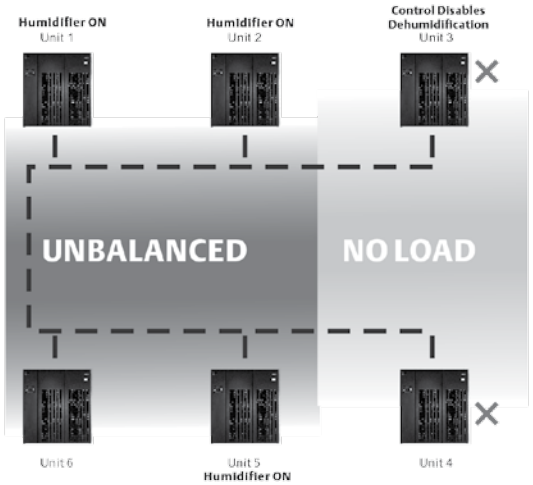



Liebert® PCW: Designed For Ease of Installation at Site

- **Adjustable Legs**
  The legs of the Liebert® PCW can be easily adjusted to suit the installation positioning requirements, enabling modification in relation to the height of the on-site raised floor level. Any future maintenance task will be timely and simple.
- **Floor Tile Support & Maintenance Kit**
  Liebert® PCW has specific kits to sustain floor tiles in proximity to the unit. Furthermore, to simplify access to the fans during installation and replacement, the Liebert® PCW maintenance kit facilitates servicing, reducing repair time and possible downtime. The kit has also been specifically designed and tested to provide support for the fans during replacement.
- **User Friendly Electrical Connections Kit** Liebert® PCW Extended solution offers powercables with fast coupling to allow easy connection between the fan and coil modules, reducing installtion time.
- **Water Connections on Demand**
  Liebert® PCW presents three options for water connection: from the bottom, from the top and from the left of the unit, for flexible on-site configuration.

Liebert® PCW Configurations

Extended Downflow Unit (50kW - 260kW)

Liebert® PCW Extended Down with fan modules installed in the raised floor, delivers optimum energy efficiency (70% saving compared to standard market solution with EC Fan). The system is shipped in two parts, fan modules and coil module. This enables a shorter lead time on the fans module and optimizes installation time. Adjustable legs are provided in order to tailor the installation to different raised floor heights.

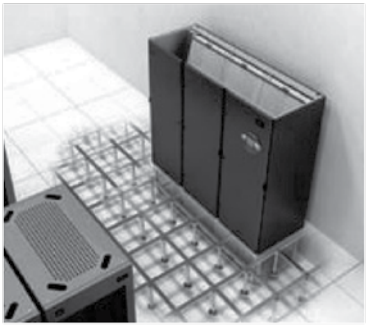

Extended Upflow Unit (50kW - 140kW)

Upflow units are the ideal solution for applications with air distribution from the top of the unit, even with no ducting system. The presence of a Liebert® EC Fan means that Liebert® PCW can deliver the highest External Static Pressure (ESP) whilst limiting power input.



Technical Specifications

Technical data of the UPFLOW unit (PH046~PH091)

Model[1]	PH046U	PH066U	PH081U	PH091U
Gross Cooling capacity and Sensible cooling capacity[2] (kW) based on Chilled Water Temperature 7℃ / 12℃				
Cooling capacity (24℃ DB 50%RH)	50.7	95	100.7	140.3
Sensible cooling capacity (24℃ DB 50%RH)	42.9	81.9	86.8	109.6
Cooling capacity (24℃ DB 45%RH)	47.4	85.3	90.5	128.6
Sensible cooling capacity (24℃ DB 45%RH)	44.9	85.3	90.5	112.7
Fan[3]				
Standard air volume (m³/h)	12000	24000	25000	25000
Fan number	1	2	2	2
Fan power (kW)	2.0	5.0	4.8	5.2
Electric heater[4]				
Power (kW)	6	9	9	9
Infrared humidifier				
Humidifying amount	5	10	10	10
Humidifying water pan	Stainless steel			
Filter[5]				
Quantity	2	4	6	6
Interface dimensions (outlet diameter)				
Chilled water in and out (mm)	42	54	54	54
Infrared humidifier pipe (mm)	6.4	6.4	6.4	6.4
Condensate drainage pipe (mm)	25	25	25	25
Chilled water supply requirement				
Inlet water flow (l/s) (24℃ DB 50%RH)	2.4	4.5	4.8	6.7
Pressure drop (kPa) (24℃ DB 50%RH)	88.3	113	61.5	130.1
Inlet water flow (l/s) (24℃ DB 45%RH)	2.3	4.1	4.3	6.1
Pressure drop (kPa) (24℃ DB 45%RH)	77.7	92	50.2	110.6
Dimension				
Unit dimension (W*D*H) (mm)	1200*890 *2570	1750*890 *2570	2050*890 *2570	2050*890 *2570
Weight				
Net weight (kg)	276	410	420	515
Electrical				
FLA[6] (A)	13.4	22.3	22.3	22.3
Main MCB (A)	100	100	100	100

Notes: 1. The standard model is two-way valve, with three-way valve optional. Compression strength of the valve is 4000 kPa.
2. For net capacities, deduct fan input power. Refer to the Liebert® PCW Chilled Water Rating Program for specific input conditions, airflow, and configuration.
3. The residual pressure out of units is 50Pa.
4. The standard heater type is PTC.
5. Based on ASHRAE52.1-1992, manual weight record method, the average filtering efficiency is above 90%; filter efficiency grade G4 (EN779).
6. The largest full-load current value is not the sum of the rated full load current of all components, but the sum of the largest rated full load current of the relevant operational components under their maximum power load operation.

Technical Specifications

Technical data of the DOWNFLOW unit (PH046~PH201)

Model[1]	PH046D	PH066D	PH081D	PH091D	PH111D	PH136D	PH161D	PH201D
Gross Cooling capacity and Sensible cooling capacity[2] (kW) based on Chilled Water Temperature 7℃ / 12℃								
Cooling capacity (24℃ DB 50%RH)	50.7	95	100.7	140.3	143.8	191.3	229.5	267.2
Sensible cooling capacity (24℃ DB 50%RH)	42.9	81.9	86.8	109.6	123.4	152.7	175.4	203.6
Cooling capacity (24℃ DB 45%RH)	47.4	85.3	90.5	128.6	128	176.5	209	247.3
Sensible cooling capacity (24℃ DB 45%RH)	44.9	85.3	90.5	112.7	128	157.8	179.3	209.8
Fan[3]								
Standard air volume (m^3/h)	12000	24000	25000	25000	36000	36000	38000	44000
Fan number	1	2	2	2	3	3	3	4
Fan power (kW)	1.5	3.5	3.4	3.8	5.2	6.0	6.2	6.9
Electric heater[4]								
Power (kW)	6	9	9	9	12	12	12	12
Infrared humidifier								
Humidifying amount	5	10	10	10	10	10	10	10
Humidifying water pan	Stainless steel							
Filter[5]								
Quantity	2	4	6	6	6	6	8	8
Interface dimensions (outlet diameter)								
Chilled water in and out (mm)	42	54	54	54	67	67	67	67
Infrared humidifier pipe (mm)	6.4	6.4	6.4	6.4	6.4	6.4	6.4	6.4
Condensate drainage pipe (mm)	25	25	25	25	25	25	25	25
Chilled water supply requirement								
Inlet water flow (l/s) (24℃ DB 50%RH)	2.4	4.5	4.8	6.7	6.9	9.1	10.9	12.7
Pressure drop (kPa) (24℃ DB 50%RH)	88.3	113	61.5	130.1	106.9	92.9	118.4	168.9
Inlet water flow (l/s) (24℃ DB 45%RH)	2.3	4.1	4.3	6.1	6.1	8.4	10	11.8
Pressure drop (kPa) (24℃ DB 45%RH)	77.7	92	50.2	110.6	85.6	80	99.4	146.1
Dimension								
Unit dimension (W*D*H) (mm)	1200*890 *2570	1750*890 *2570	2050*890 *2570	2050*890 *2570	2550*890 *2570	2550*890 *2570	2950*890 *2570	3350*890 *2570
Weight								
Net weight (kg)	276	410	420	460	515	575	660	720
Electrical								
FLA[6] (A)	13.4	22.3	22.3	22.3	31.1	31.1	31.1	35.4
Main MCB (A)	100	100	100	100	100	100	100	100

Notes: 1. The standard model is two-way valve, with three-way valve optional. Compression strength of the valve is 4000 kPa.
2. For net capacities, deduct fan input power. Refer to the Liebert® PCW Chilled Water Rating Program for specific input conditions, airflow, and configuration.
3. The residual pressure out of units is 20Pa.
4. The standard heater type is PTC.
5. Based on ASHRAE 52.1-1992, manual weight record method, the average filtering efficiency is above 90%; filter efficiency grade G4 (EN779).
6. The largest full-load current value is not the sum of the rated full load current of all components, but the sum of the largest rated full load current of the relevant operational components under their maximum power load operation.

Liebert® PDX

The Thermal Management Solution for Small and Medium Data Centers

■ **15to120kW**

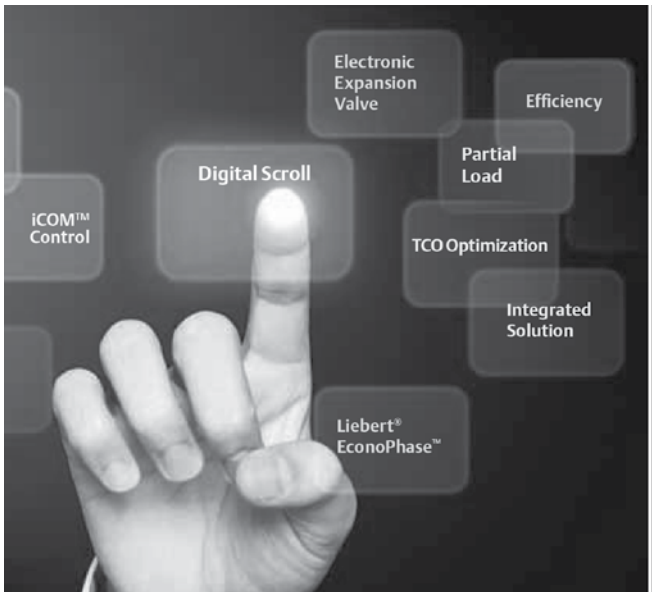



Whether a data center houses three or 200 IT racks, deployment of new technologies with high power densities are impacting the power and cooling systems that business-critical servers and communications devices depend on for their performance and reliability.

■ **The critical infrastructure systems from Emerson Network Power allow customers to respond to changes** in density, capacity and availability while achieving greater operating flexibility, higher system availability and lower total costs of ownership.

■ **Emerson Network Power delivers innovative solutions through 12 Centers of Expertise**, distinct areas of breakthrough products and services that help determine what is needed in relation to the application. Supported by a global network in more than 150 countries, backed by local service and support from more than 2,000 certified professionals, Emerson Network Power is uniquely positioned to provide systems and integrated solutions wherever our customers are located.

Emerson Network Power understands the challenges of setting up the right infrastructure to support business-critical data center operations and helps respond to any demand by providing innovative solutions, allowing customers to concentrate on their business requirements.

■ **The Liebert® PDX direct expansion cooling unit is equipped with the most advanced industry technology, guaranteeing precise cooling of data centers and server rooms. It comes complete with R410A refrigerant which allows the unit to reach significant levels of efficiency.** The Liebert PDX range also includes new generation Liebert® EC Fans 2.0, thus ensuring top energy efficiency. The complete unit design has furthermore been optimized with enhanced heat exchangers, delivering high levels of overall efficiency and cooling capacity. In addition, Liebert PDX also includes unique Digital Scroll technology, making it the ideal, scalable cooling system able to expand with evolving business needs. The Digital Scroll modulating capability greatly contributes to the efficiency levels reached by Liebert PDX with a 50 kW unit (inclusive of Digital Scroll) consuming as little as a 10 kW unit, thus delivering advantageous energy savings.

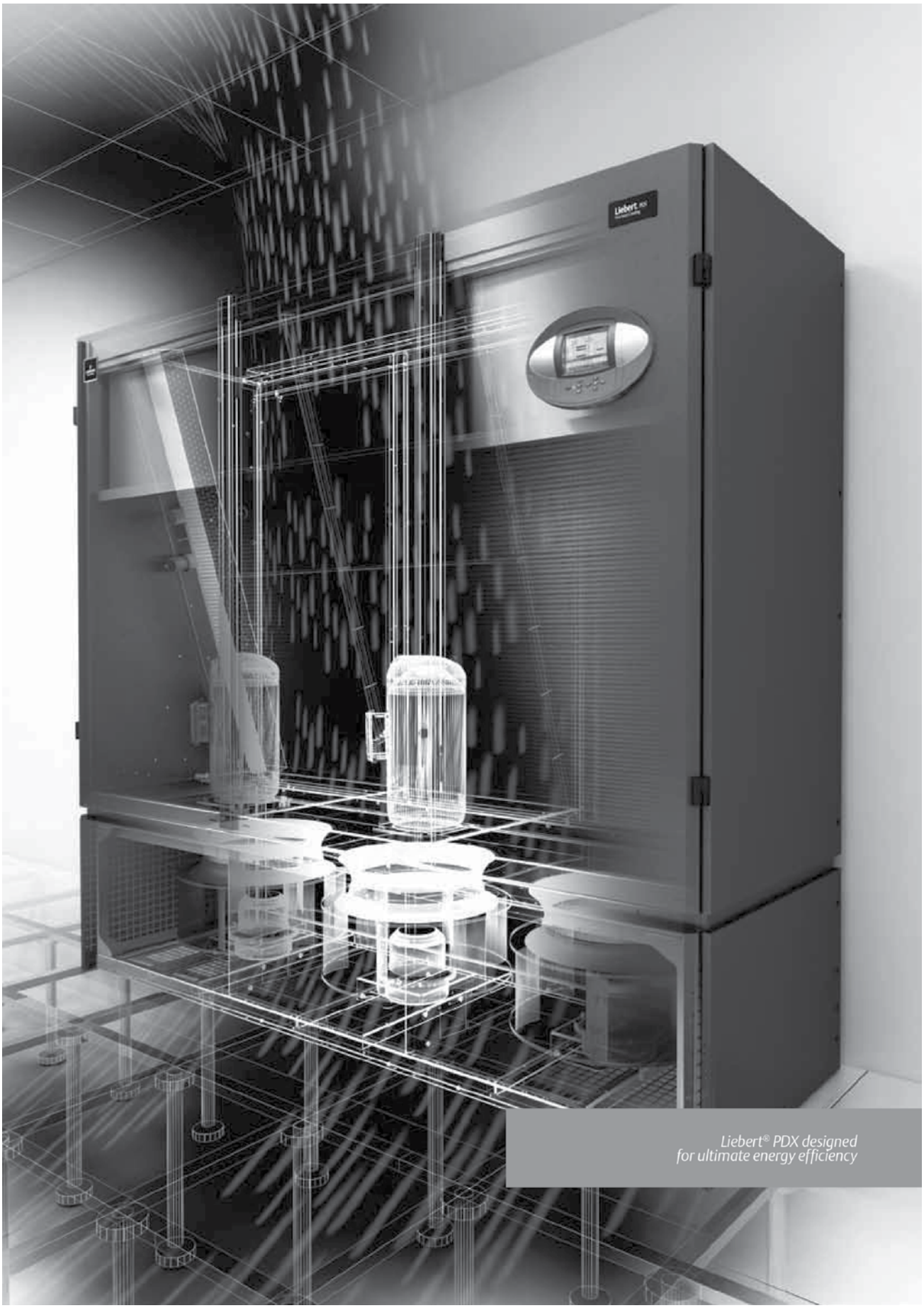
Liebert® PDX designed
for ultimate energy efficiency

Liebert® PDX Key Features



R410A Refrigerant

Designed for R410A Refrigerant.



Copeland Digital Scroll Technology

The best solution in terms of variable cooling capacity.



Precise Temperature Control

Digital Scroll based technology allows for close monitoring and control of room temperature.



Liebert® EC Fan 2.0

The new generation of Liebert® EC Fan 2.0 is the core of the Liebert PDX, significantly minimizing noise levels and increasing the efficiency of the unit.



Electronic Expansion Valve

This valve is designed to constantly optimize the refrigeration circuit's performance in order to achieve the highest efficiency also at partial load. The relevant valve management software is also embedded in the unit's iCOM™ control function.



Ultrasonic Humidifier - The Efficient Humidification Technology

Liebert PDX 's cutting-edge technology allows each of its components to save energy while delivering the required data center cooling performance. The infrared and electrode boiler humidifier are two efficient options made available.



iCOM Control - When Smart Means Efficient

Smart mode is a control algorithm developed for SmartAisle™ containment applications, meeting the cooling and airflow needs of the servers while ensuring only necessary kilowatts are invested in targeted cooling.



European ErP 2015 Directive

Precision cooling floor mount products comply with the European ErP 2015 Directive requirements, respecting environmental commitments while reducing operating costs.



Energy Efficiency

First-class energy efficiency achieved through the combination of market leading technologies.

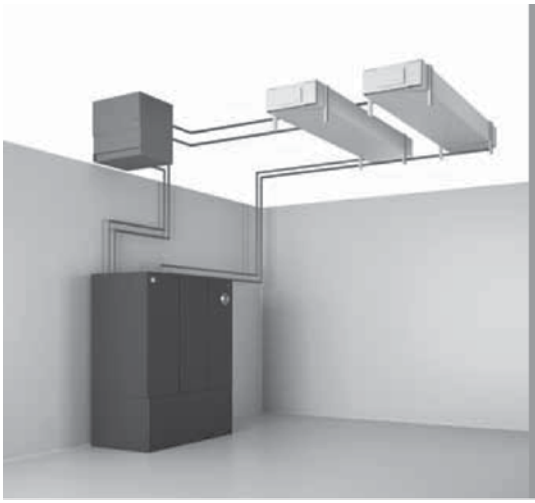

The Liebert® EconoPhase™ pumped refrigerant economizer is compatible with the Liebert® PDX and Liebert® MC to improve thermal management and control, while drastically cutting energy costs and lowering PUE.



Freecooling Modes for Optimizing System Efficiency

- Fresh Air/Direct Freecooling
- Water/Indirect Freecooling
- Liebert® EconoPhase™ Pumped Refrigerant Economizer

Heat Load Monitoring

Continuous monitoring of heat load ensures that only necessary kilowatts are invested in targeted cooling, thus conserving energy.

24x7 Service Offering

Emerson Network Power supports customers with an extensive service offering, guaranteeing availability and total peace of mind 24/7.



iCOM™ Control Drives Liebert® PDX to the Highest Efficiency Levels

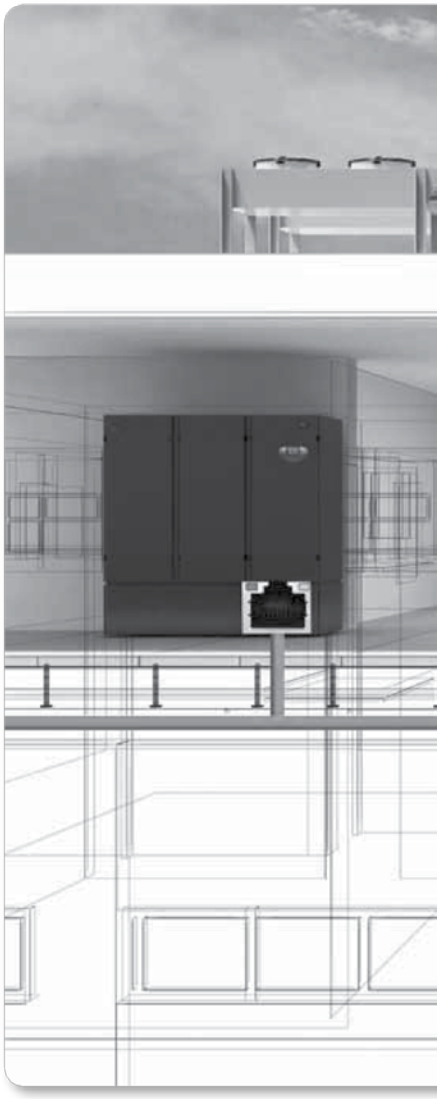

The iCOM device features a unique control algorithm designed to manage the operation of the Liebert PDX units, ensuring top reliability in all conditions. Liebert PDX units with the iCOM control graphic display, may be centrally monitored and controlled with the optional wall mounted display. The display allows access to the unit via the Network, making coordination between Liebert PDX units within the same room possible as a result of the integrated Ethernet connection. The self monitoring of redundant units alternates standby positions and gives priority to possible hot spots. The high-level supervision of multiple units allows them to work together as a single system optimizing room temperature and humidity. This is of particular importance for EC fans. EC fan power consumption is exponential. Having five units running at 80% instead of four at 100% will lower the total energy used by the entire group by 36%. iCOM manages the reduction of fan speed whenever operation at full capacity is not required. Liebert PDX digital modulates both fans and compressors thus increasing the entire system's efficiency. Efficiency is in turn further increased as a result of Liebert PDX's ability to share the heat load among installed units, guaranteeing ideal cooling levels while minimizing consumption.

Unit to Unit Communication

iCOM directly connects with the facility network (Ethernet) and enables communication between multiple Liebert PDX units for synchronized operation, guaranteeing increased reliability and precision cooling room control.

Smart mode is a control algorithm developed for SmartAisle™ containment applications, meeting the exact cooling and airflow needs of the servers, investing only necessary kilowatts in targeted cooling.





7



Liebert® PDX: Remote Diagnostic and Preventive Monitoring Services

LIFE™ Remote Diagnostic and Preventive Monitoring Services
Proactive equipment maintenance reduces downtime and extends equipment life which in turn maximizes return on investment and increases system availability.
Emerson Network Power supports entire critical infrastructures with an extensive service offering, guaranteeing network availability and total peace of mind 24/7.
Our approach to servicing critical infrastructure covers all aspects of availability and performance, from single units to entire mission critical systems, providing customers with tailored services to meet their individual business needs. Emerson Network Power's service program is designed to ensure that your critical Thermal Management system is maintained in an optimum state of readiness at all times.
The LIFE™ services enable 24/7 remote diagnostic and preventive monitoring providing early warning of Thermal Management units conditions and out of tolerances. This allows proactive maintenance and remote trouble

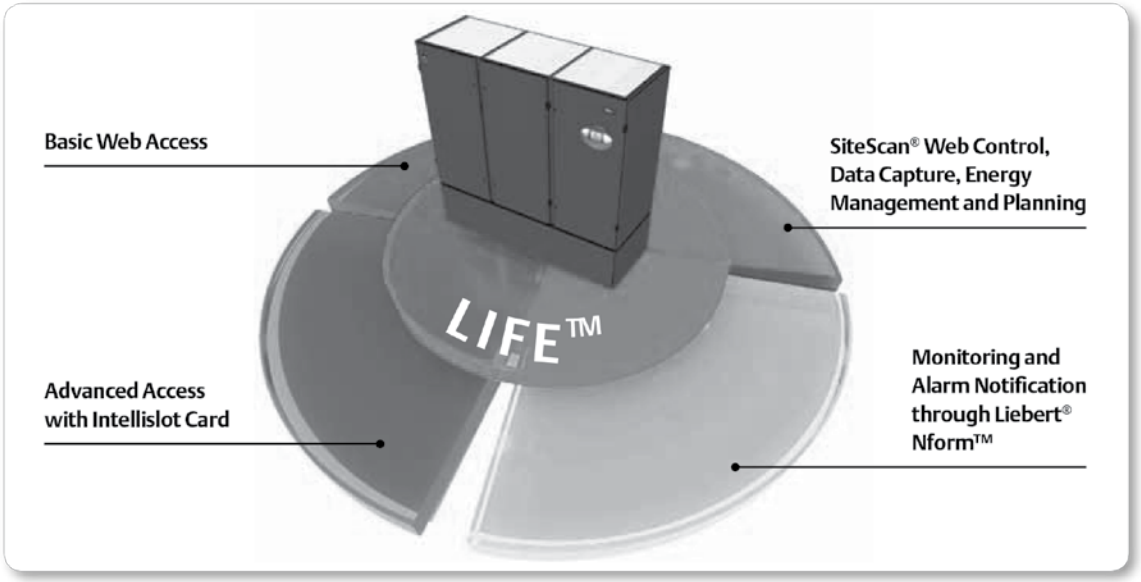

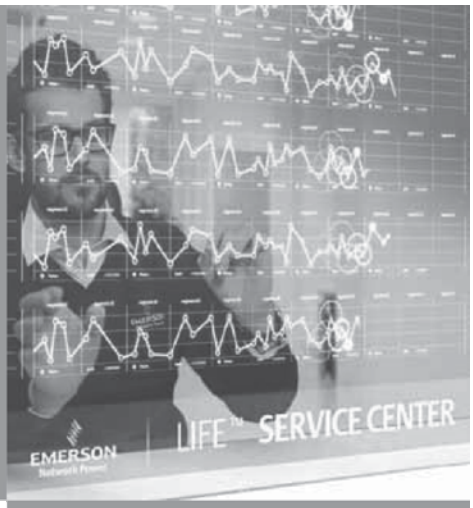

shooting minimizing the risk of downtime and optimizing Mean Time Between Failures and First Time Fix Rate, granting total peace of mind.

- **Basic Web Access**
  Basic operational information can be made available through the monitoring feature offered by the iCOM™ Control over Ethernet. A web browser is the only requirement needed for the unit to communicate directly with the local or remote web interface.
- **Monitoring and Control Through Existing Network Via your Web Browser**
  The Liebert® PDX system can be fitted with a Liebert® IntelliSlot Unity Card allowing full advantage to be taken of the Ethernet network and remote monitoring from your computer desktop, network operations center or any network access simply utilizing a standard web browser. A standard web browser, via HTTP protocol or Network Management System software via SNMP protocol, can be used to access the unit information.
- **Monitoring Integration with Existing Building Management System**
  If required, Liebert PDX may be integrated with an existing Building Management System, while the IntelliSlot Unity Card provides Modbus RTU and Modbus TCP compatibility. SCADA support is completed through the Bacnet over IP card.
- **Liebert® Nform™ Software Centralized Management**
  As business grows, critical equipment infrastructure expands, thus the need for centralized management of any equipment is key to business success. Connecting to equipment in the distributed critical space is only part of the monitoring challenge.
  Liebert Nform leverages the network connectivity capabilities of Liebert PDX to provide centralized monitoring of the distributed equipment. Utilizing the SNMP and Web technologies integrated in the Liebert IntelliSlot communication card, Liebert Nform centrally manages alarm notifications and provides an intuitive interface to access critical status information. Liebert Nform allows critical system information to be readily available to support personnel wherever they are, increasing responsiveness to alarm-event conditions, thus allowing IT organizations to maximize their system availability.

Liebert SiteScan® Web Control, Data Capture, Energy Management and Planning

For customers who require extensive management of critical system equipment spanning multiple locations in an ever-moving global enterprise, Liebert SiteScan® Web will centrally manage critical equipment and give the power to move beyond the event responsive service paradigm.

Liebert SiteScan® Web does it all

- Real-Time Monitoring and Control
- Event Management and Reporting
- Data Analysis and Trending
- Building Management Integration

Liebert SiteScan Web is a comprehensive critical system management solution dedicated to ensuring reliability through graphics, event management and data export. The standard web interface allows users easy access from anywhere, anytime.

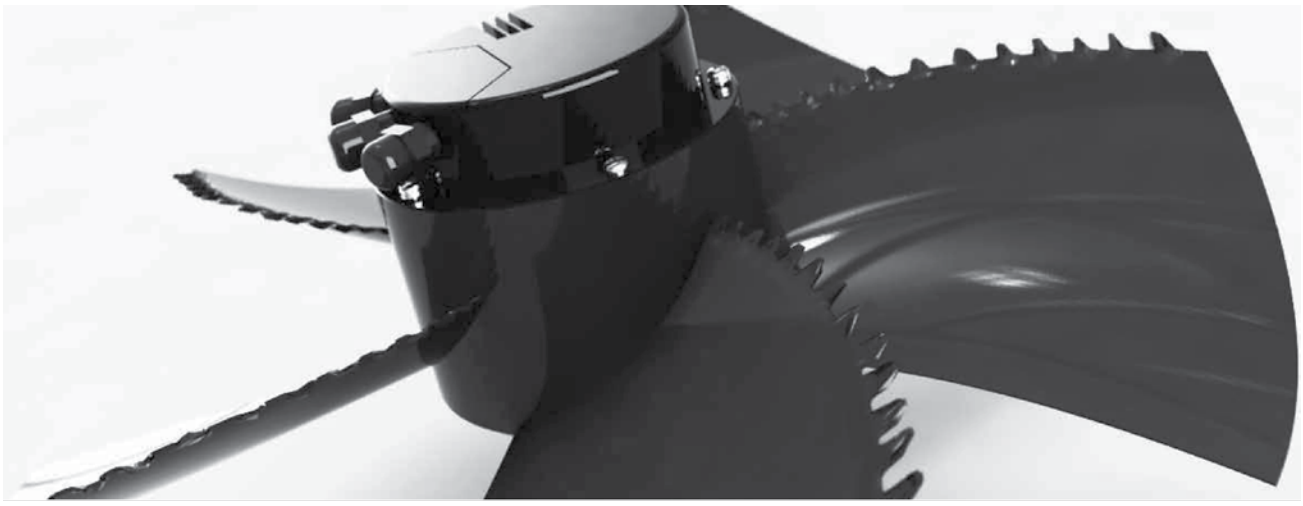

Liebert® MC: The New Condensing Technology

Liebert MC new microchannel condensers are ideally designed to match the outstanding performances of Liebert® PDX. The highly efficient Liebert MC unit directly communicates with Liebert PDX units via the integrated iCOM™ Control, providing significant advantages in terms of condenser management. The Liebert MC can thus be managed through the Liebert PDX iCOM control allowing the complete coordination of unit and condenser settings status and alarm conditions. The possibility of selecting silent functioning modes at defined times (i.e. during the night or the weekend), through the unit control, further ensures full operating flexibility.

High Efficiency at Full and Partial Load Conditions

Liebert MC microchannel condensers, equipped with EC fans, deliver a 20% increase in unit efficiency at full load, when compared to a standard condenser adopting the Variable Frequency Drive (VFD). Efficiency levels are further optimized at partial load where the EC Fans require a lower power input, thus reducing energy consumption and guaranteeing top-tier performances.

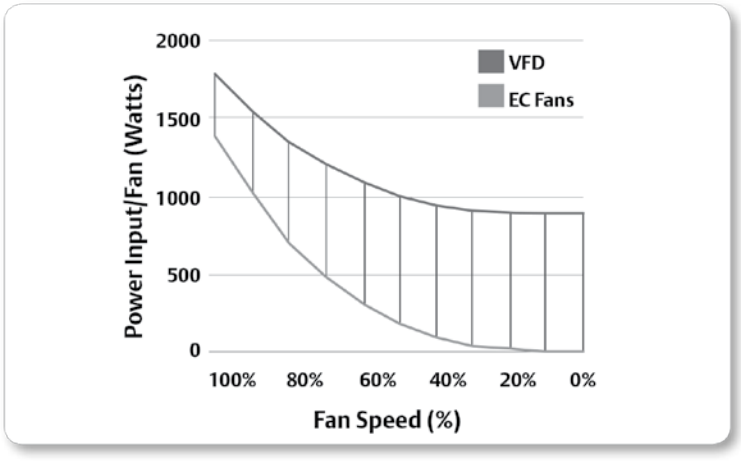

For specific environments in which microchannel condenser use is limited, Liebert® HCR base condensers are available.

Microchannel
Aluminum Coils

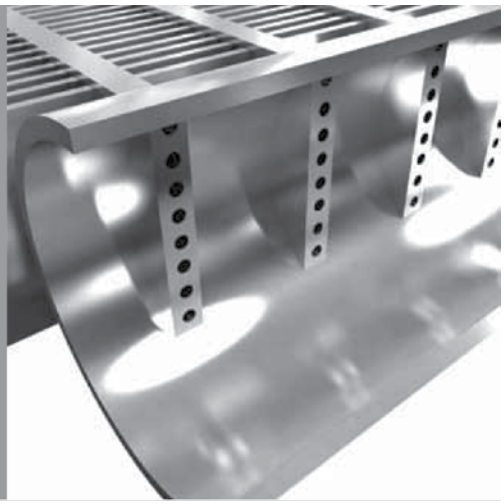

Liebert® MC: Enhancing Efficiency Levels



Microchannel Condensing Coil:
The full aluminum coil ensures enhanced efficiency levels also during the mechanical cooling mode.

New generation EC Fans:
The new generation EC Fans guarantee the highest efficiency at full and at partial load, ensuring also extremely silent operations.

Liebert® PDX - Scroll

Single Circuit												
Model		**PX015**	**PX021**	**PX025**	**PX031**	**PX033**	**PX041**	**PX045**	**PX059**	**PX047**	**PX051**	**PX057**
Total Gross Cooling Capacity	kW	13.9	19.1	25.0	30.1	34.2	40.41	44.6	57.3	46.28	53.1	59.0
Net Sensible Cooling Capacity	kW	13.4	18.2	23.2	26.5	28.7	35.8	39.1	45.1	43.8	50.0	54.6
SHR		1.00	1.00	0.98	0.94	0.90	0.93	0.93	0.82	1.00	1.00	0.98
Net Sensible EER		4.37	3.93	3.53	3.21	3.09	3.51	3.33	2.99	3.70	3.47	3.40
Airflow	m³/h	4462	5672	6792	7752	7944	10000	10900	11200	14500	15800	16300
Max. ESP	Pa	250	250	250	220	180	250	100	80	300	300	300
Dimensions (W x D)	mm	844 x890	844 x 890	844 x 890	844 x 890	844 x 890	1200 x 890	1200 x 890	1200 x 890	1750 x 890	1750 x 890	1750 x 890
Height (H)	mm	1970	1970	1970	1970	1970	1970	1970	2570	1970	1970	1970
Weight	kg	290	300	320	340	340	452	456	593	620	621	675
Number of Capacity Steps		1	1	1	1	1	1	1	2	1	1	2
Aiflow Delivery Down Flow UP - Fans Over the Raised Floor Up Flow Frontal Downflow Down - Fans in Raised Floor												
Cooling Version: Air Cooled Water Cooled Dual fluid (Chilled water + DX Air Cooled) Dual fluid - Chilled water + DX Water Cooled Freecooling EconoPhase												

Double Circuits											
Model		**PX044**	**PX054**	**PX062**	**PX068**	**PX074**	**PX092**	**PX082**	**PX094**	**PX104**	**PX120**
Total Gross Cooling Capacity	kW	44.8	55.1	62.5	66.1	74.8	92.5	85.7	94.5	106.5	123.9
Net Sensible Cooling Capacity	kW	42.3	51.2	55.6	62.2	62.9	72.2	78.4	84.9	91.7	100.7
SHR		0.99	0.99	0.95	0.98	0.90	0.82	0.97	0.96	0.92	0.86
Net Sensible EER		3.79	3.53	3.35	4.08	3.09	2.93	3.60	3.38	3.10	2.95
Airflow	m³/h	12500	15500	16300	18500	17600	17950	24000	26000	27000	27000
Max. ESP	Pa	300	200	200	300	80	180	250	150	100	100
Dimensions (W x D)	mm	1750 x 890	1750 x 890	1750 x 890	2550 x 890	1750 x 890	1750 x 890	2550 x 890	2550 x 890	2550 x 890	2550 x 890
Height (H)	mm	1970	1970	1970	1970	1970	2570	1970	1970	1970	1970
Weight	kg	638	642	680	887	680	776	901	901	901	954
Number of Capacity Steps		2	2	2	2	2	2	2	2	2	4
Aiflow Delivery Down Flow UP - Fans Over the Rraised Floor Up Flow Frontal Downflow Down - Fans in Raised Floor											
Cooling Version: Air Cooled Water Cooled Dual fluid (Chilled water + DX Air Cooled) Dual fluid - Chilled water + DX Water Cooled Freecooling EconoPhase											

Performances at
24°C 50% - 45°C condensing temperature
Nominal ESP 20 Pa

Liebert® PDX - Digital Scroll - SmartAisle™

Single Circuit

Model		PX021	PX025	PX031	PX033	PX041	PX045	PX059	PX047	PX051	PX057
Total Gross Cooling Capacity	kW	24.9	32.4	37.8	41.9	50.3	55.4	68.8	63.0	67.4	74.6
Net Sensible Cooling Capacity	kW	24.1	31.1	36.0	39.9	48.4	53.0	66.4	60.5	64.3	71.3
SHR		1.00	1.00	1.00	1.00	1.00	1.00	1.00	1.00	1.00	1.00
Net Sensible EER		4.79	4.65	4.24	4.18	4.62	4.36	4.35	4.58	4.53	4.37
Airflow	m³/h	5672	6792	7752	7944	10000	10900	11200	14500	15800	16300
Max. ESP	Pa	250	250	230	200	250	100	80	300	300	300
Dimensions (W x D)	mm	844 x 890	844 x 890	845 x 890	844 x 890	1200 x 890	1200 x 890	1200 x 890	1750 x 890	1750 x 890	1750 x 890
Height (H)	mm	1970	1970	1970	1970	1970	1970	2570	1970	1970	1970
Weight	kg	300	320	340	340	452	456	593	635	637	675
Minimum Nominal Capacity Modulation		20%	20%	20%	20%	20%	20%	25%	25%	25%	25%
Aiflow Delivery Down Flow UP - Fans Over the Raised Floor Up Flow Frontal Downflow Down - Fans in Raised Floor											
Cooling Version: Air Cooled Water Cooled Dual fluid (Chilled water + DX Air Cooled) Dual fluid - Chilled Water + DX Water Cooled Freecooling EconoPhase											

Double Circuits

Model		PX044	PX054	PX062	PX068	PX074	PX092	PX082	PX094	PX104	PX120
Total Gross Cooling Capacity	kW	61.0	72.8	80.4	90.1	94.5	113.3	111.8	126.3	133.4	153.4
Net Sensible Cooling Capacity	kW	59.0	69.3	76.6	87.5	89.8	109.3	106.6	120.1	126.5	146.5
SHR		1.00	1.00	1.00	1.00	1.00	1.00	1.00	1.00	1.00	1.00
Net Sensible EER		5.19	4.80	3.28	5.60	4.34	4.38	4.46	4.33	4.35	4.22
Airflow	m³/h	12500	15500	16300	18500	17600	17950	24000	26000	27000	27000
Max. ESP	Pa	300	200	200	300	80	180	250	150	100	100
Dimensions (W x D)	mm	1750 x 890	1750 x 890	1750 x 890	2550 x 890	1750 x 890	1750 x 890	2550 x 890	2550 x 890	2550 x 890	2550 x 890
Height (H)	mm	1970	1970	1970	1970	1970	2570	1970	1970	1970	1970
Weight	kg	638	642	680	887	680	776	931	931	931	954
Minimum Nominal Capacity Modulation		10%	10%	10%	10%	10%	10%	12,5%	12,5%	12,5%	12,5%
Aiflow Delivery Down Flow UP- Fans Over the Raised Floor Up Flow Frontal Downflow Down - Fans in Raised Floor											
Cooling Version: Air Cooled Water Cooled Dual fluid (Chilled water + DX Air Cooled) Dual fluid - Chilled water + DX Water Cooled Freecooling EconoPhase											

Performances at
37°C 24% - 45°C condensing temperature
Nominal ESP 20 Pa
Fan over the floor

Air Handling Units

This page is intentionally left blank.

Liebert® Custom Air Handling Units

Thermal Management Solutions for Large Data Centers



Liebert Custom Air Handling Solutions

- Advanced data center control and optimization
- Next generation components and equipment
- Industry best service offerings

Delivers

- Industry best delivered efficiency – annual PUE < 1.2
- Industry's most advanced Control and Performance Optimization
- Availability approaching 100%
- Maximum customer design and control flexibility

Advanced Data Center Control and Optimization

- Choice of control strategies including Optimized Aisle™
- Multi-Unit teamwork with fan speed coordination and predetermined sequence of operation
- Global platform with proven operational routines
- Simple BMS integration
- *Trellis*™ Installed advanced applications

Next Generation Components and Equipment

- Highest quality design, material and construction
- State of the art, high efficiency components and systems
- *Trellis* Installed intelligent sensors

Industry Best Service Offerings

- Nationwide service through local factory trained technicians
- 24-hour customer and tech support
- Guaranteed 4 hour response time for contract customers
- Remote Monitoring delivered by data center experts
- Energy optimization services

Optimized Data Center Control with Multi-Unit Teamwork

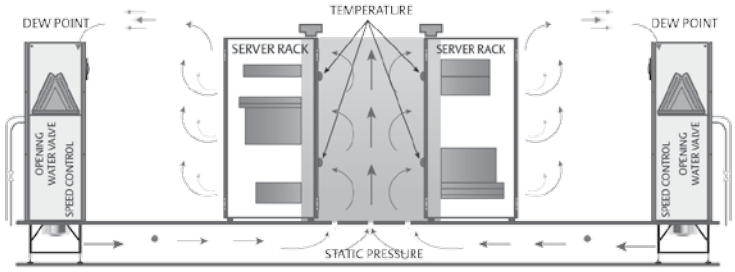

***Trellis* Installed Intelligent Sensors**

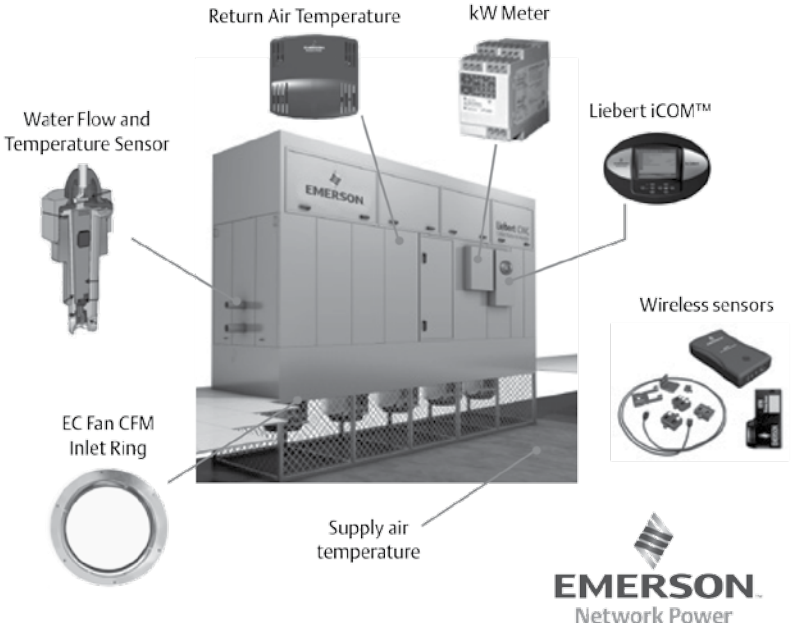

EMERSON
Network Power

Liebert® Custom Air Handling Units

Thermal Management Solutions for Large Data Centers

Maximum Customer Design and Control Flexibility

Chilled Water

- EC or direct drive fans with VFD options arranged in single or fan array configurations
- Optional air economization for optimum efficiency



Liebert CWC Chilled Water Air Handler

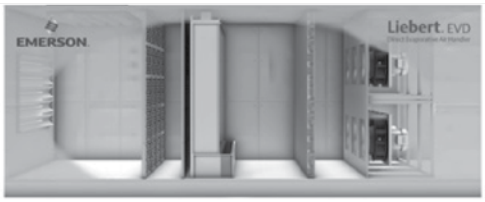

Liebert EVD Direct Evaporative Air Handler

Direct Evaporative

- PUE < 1.1 with minimal water usage
- DX or chilled water secondary cooling options sized for full or trim cooling
- EC or direct drive fans with VFD options arranged in single or fan array configurations

Indirect Evaporative

- PUE < 1.2 with minimal water usage
- Highly efficient aluminum air-to-air heat exchanger offers up to 66% efficiency dry and 78% efficiency wet
- Supplemental DX or chilled water options available for trim cooling requirements



Liebert EVI Indirect Evaporative Air Handler



Liebert DSC Direct Expansion Air Handler

Direct Expansion

- High quality, highly efficient rooftop DX solutions specifically designed for data centers
- Configurations incorporate outside air economization, variable capacity compressors, bypass dampers, and evaporative condensers

	Capacity	Air Flow	Configurations
Liebert CWC Chilled Water Air Handler	200 – 600+ kW	25,000 – 80,000+ CFM	Indoor Unit – Downflow, Upflow, or Horizontal Airflow
Liebert EVD Direct Evaporative Air Handler	150 – 600+ kW	20,000 – 80,000+ CFM	Data center, gallery, rooftop or external building perimeter
Liebert EVI Indirect Evaporative Air Handler	150 – 400+ kW	20,000 – 60,000+ CFM	Rooftop or external building perimeter
Liebert DSC Direct Expansion Air Handler	150 – 600+ kW	20,000 – 80,000+ CFM	Rooftop or building perimeter

Contact your local representative to learn more about air handler unit customization options. EmersonNetworkPower.com

While every precaution has been taken to ensure accuracy and completeness in this literature, Liebert Corporation assumes no responsibility, and disclaims all liability for damages resulting from use of this information or for any errors or omissions.

© 2013 Liebert Corporation. All rights reserved throughout the world. Specifications subject to change without notice. All names and logos referred to herein are trade names, trademarks or registered trademarks of their respective owners. ® Liebert is a registered trademark of the Liebert Corporation. *Business-Critical Continuity*, Emerson Network Power and the Emerson Network Power logo are trademarks and service marks of Emerson Electric Co. ©2013 Emerson Electric Co.

SL-19700 (R10/13) Printed in USA

Evaporative Free Cooling

This page is intentionally left blank.

Liebert® EFC

100 to 350 kW

The Highly Efficient Indirect Evaporative Freecooling Unit





Liebert® EFC, the Highly Efficient Indirect Evaporative Freecooling Solution

Emerson Network Power provides a unique combination of industry expertise, technology, and resources to make the future of your business possible.

As a trusted industry leader in smart infrastructure technologies, the company provides innovative data center infrastructure management solutions that bridge the gap between IT and facility management, delivering efficiency and uncompromised availability regardless of capacity demands.

The wide product portfolio and integration capabilities enhanced by complete life cycle services support data centers, communication networks, healthcare and industrial facilities from project launch to performance optimization.



Liebert EFC 300



Liebert EFC 200

The Liebert EFC is equipped with the most advanced industry technology. The system includes indirect air-to-air heat exchange and evaporative cooling technology all in one footprint. The Liebert EFC is capable of reducing air temperatures by leveraging on the evaporative cooling principle. The process involves the evaporation of pressurized water which as a consequence cools the surrounding air. Through this technology, the Liebert EFC can thus achieve pPUE levels of 1.03 ensuring top energy efficiency, as well as minimized operating costs.

#LiebertEFC

Liebert® EFC: Enhancing Data Center Efficiency

Evaporative Cooling

The highly efficient evaporative system sprays water inside the unit, as well as on the heat exchanger to enable cooling even at high ambient air temperatures, without the need of mechanical cooling.

Highly Efficient EC Fans

The new generation of fans installed in the Liebert EFC dramatically reduce the noise level and increase the overall efficiency of the unit.

Reduced CO_2 Emissions

At pPUE levels of 1.03, Liebert EFC requires minimum power input consequently reducing CO_2 emissions.

Data Center Free from Contaminations

The air-to-air heat exchanger separates external and internal air, protecting the data center air from bacterial contamination, as well as other external events such as fire and pollution.

New iCOM™ 7" Touch Display

iCOM Control ensures high level management of the units to work together as a single system, thus optimizing room temperature and airflow. Furthermore, it features a new 7" touch screen display for quicker and easier data readability.



The evaporative system has a dedicated internal pump station that provides the exact amount of water needed. The pump pressurizes the water which is then atomized through special nozzles in billions of micro drops, which in turn evaporate, humidifying and cooling the air.





Energy Efficiency

The evaporative cooling technology enables Liebert EFC to reach pPUE levels as low as 1.03.

Eurovent Certified Heat Exchanger

Eurovent certification guarantees that Liebert EFC heat exchangers undergo independent testing, thus delivering rating accuracy and enhancing the unit's reliability.

Freecooling

Evaporative cooling extends indirect freecooling operation all year round.

Integrated Chilled Water Coil and Direct Expansion System

These technologies ensure the unit's operation even in climates characterized by extreme humidity levels or severe temperature peaks.

Partial Load Efficiency

New generation EC fans and integrated digital scroll compressors contribute to achieving the highest efficiency levels at partial load.

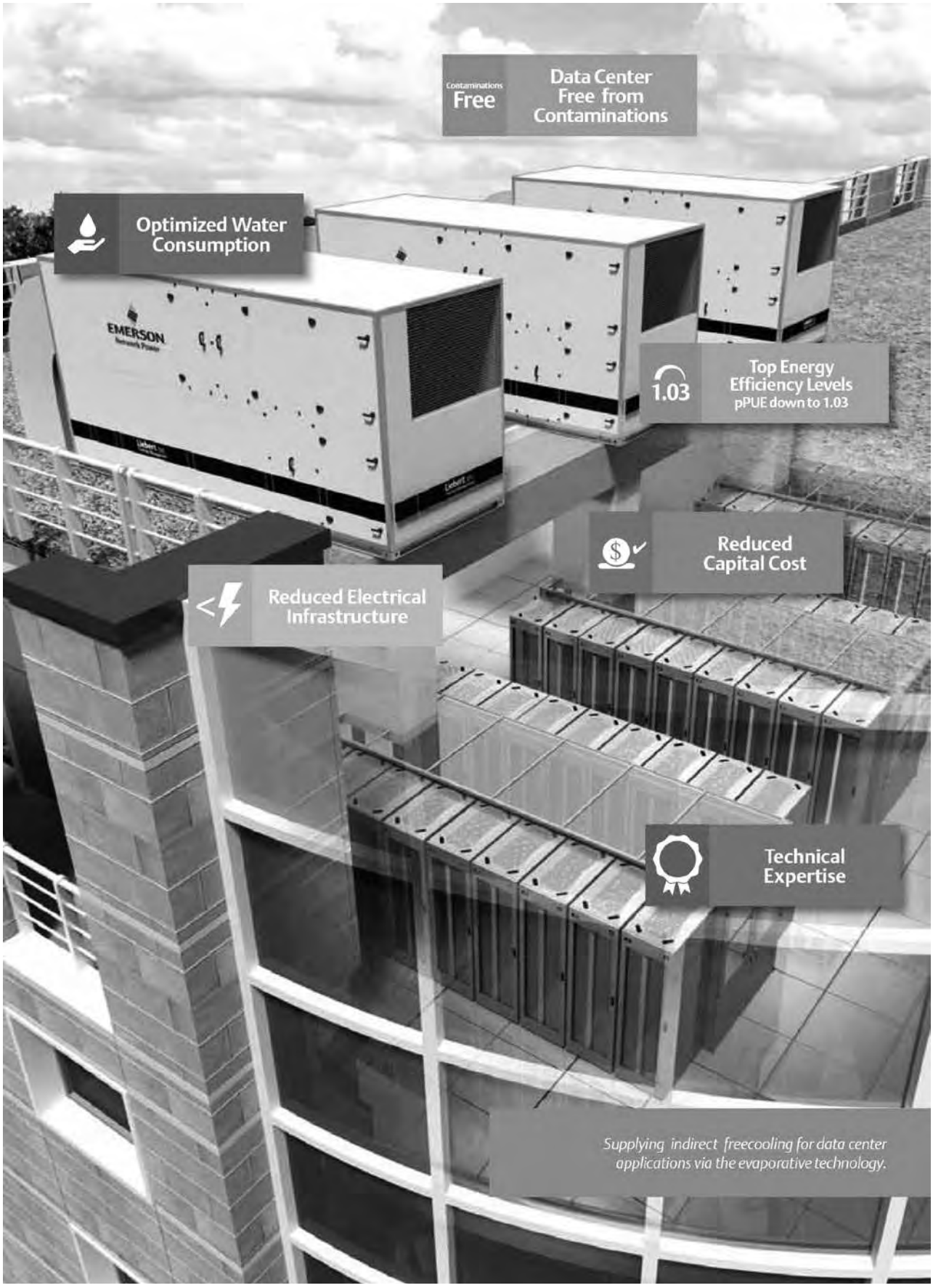
Contaminations Free
Data Center Free from Contaminations
Optimized Water Consumption
EMERSON
1.03
Top Energy Efficiency Levels
pPUE down to 1.03
Reduced Capital Cost
Reduced Electrical Infrastructure
Technical Expertise
Supplying indirect freecooling for data center applications via the evaporative technology.



Ensuring Top Efficiency Levels through the Evaporative Principle

The Liebert® EFC combines the capabilities of freecooling and evaporative cooling principles in one single unit. It has been specifically designed to select the most appropriate operating mode based on the external environment conditions, leveraging both principles in order to deliver significant energy savings.

The use of the evaporative cooling, hence using cold external air as a means of cooling, allows freecooling operation to be maximized and compressor-related cooling to be reduced to a minimum, thus optimizing operating costs.

The evaporative principle uses air to absorb water that is sprayed at high pressure. Water evaporation, thus removes heat from the air and cools the outside air temperature. Outside air consequently transitions from Dry Bulb Temperature to Wet Bulb Temperature *(the graph below shows the transition from 30°C to 20°C).*

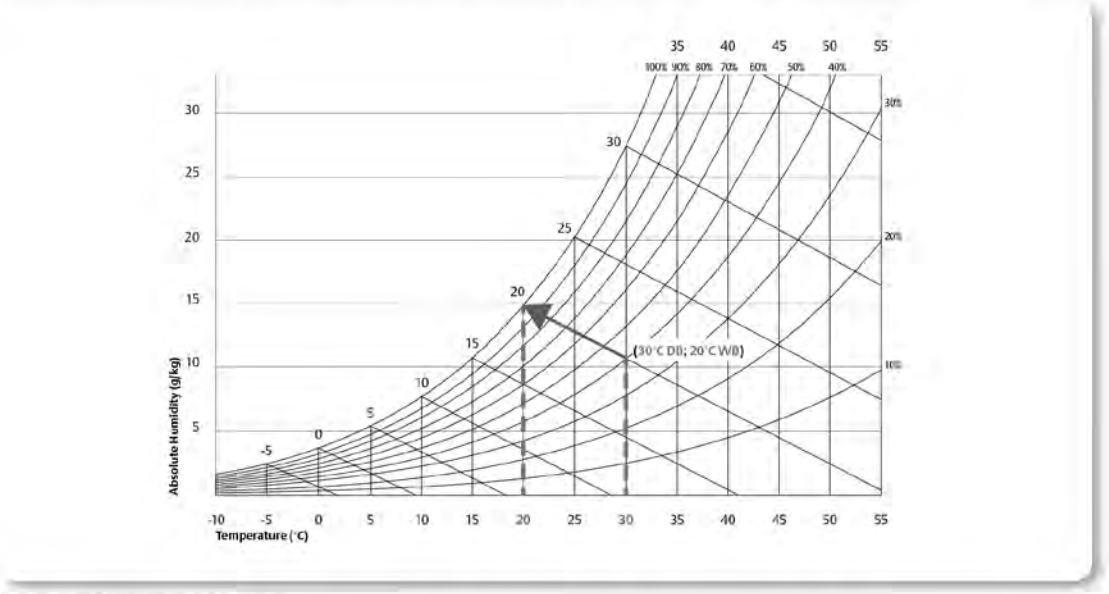

Psychrometric Chart for Sea-Level Elevation

#EvaporativeCooling

Where Indirect Evaporative Cooling Works

In order to optimize the overall system efficiency, the Liebert® EFC has been designed to change its operation mode according to the external environment. When the external air is cold enough to allow freecooling, the unit works in dry operation mode (winter operation mode). When ambient temperatures are higher, also external humidity determines unit capacity and performances as the evaporative effect is directly associated to the external air capacity to absorb water. When the unit operates in environments with higher temperature and lower relative humidity (summer operation mode), Liebert EFC works in evaporative (wet) mode.
In climates featuring high levels of humidity the unit may thus require the integration of a Direct Expansion (DX) system or the installation of a Chilled Water (CW) coil (extreme operation mode).

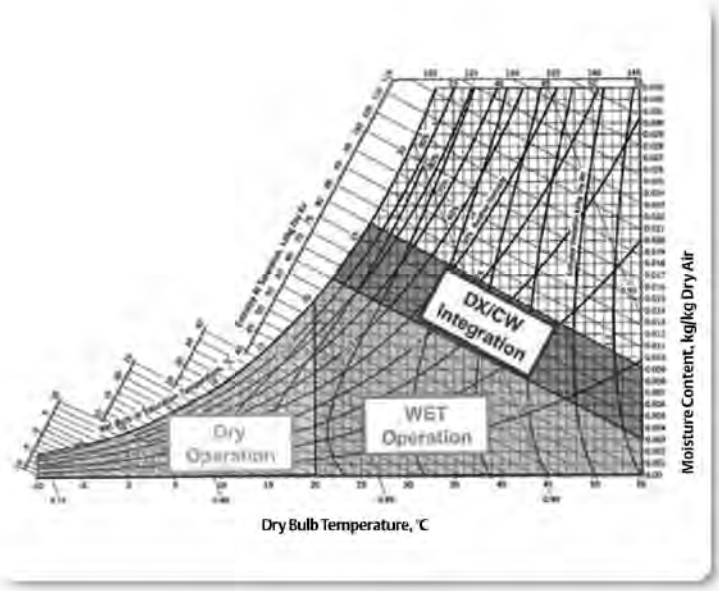

Dry Operation (Dry Bulb Temperature <17°C-20°C)*

The unit can cool the data center solely via the air-to-air heat exchanger, thus using only cold external air.

Wet Operation (Wet Bulb Temperature <20°C - 22°C)*

The unit can leverage the evaporative effect via humidification. External humidity assumes a key role in determining unit performances:

- 24°C - 80% relative humidity, the unit may require DX/CW integration.
- 30°C (higher temperature) and 35% (lower relative humidity) the unit can operate solely with evaporative cooling.

*Assumptions: data center 36°C → 24° C - 75% of full load per unit (redundancy operation)

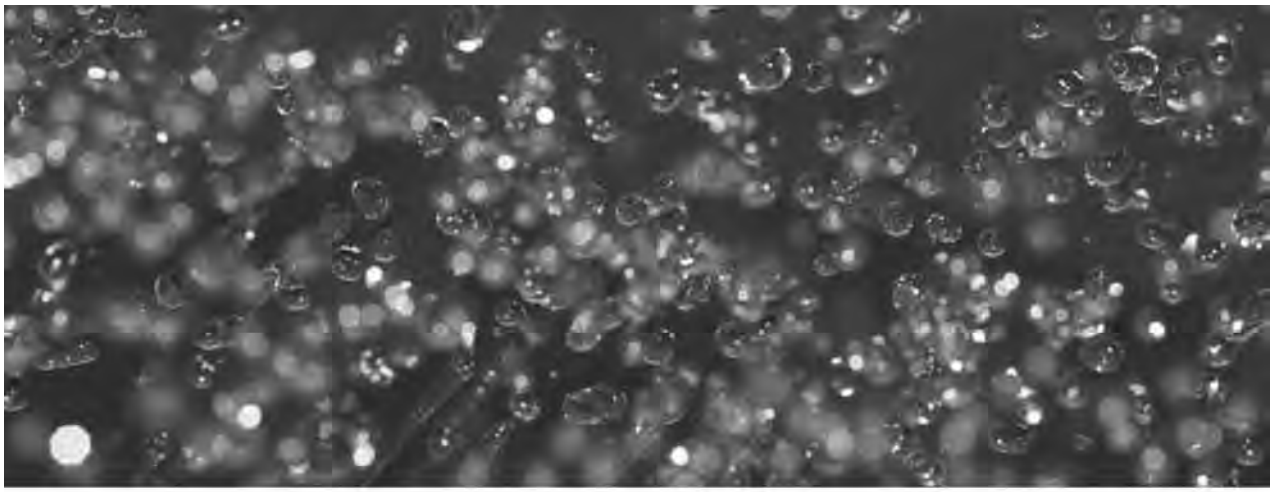

Liebert® EFC Operation Modes In Detail

- During the cold season (winter operation mode) return air from the data center is cooled down, leveraging the heat exchange process with external cold air. There is no need to run the evaporative system and the fan speed is controlled by the external air temperature.
- During the warm season (summer operation mode) the evaporative system must run in order to saturate the air. This enables the unit to cool the data center air even with high external air temperatures. By saturating the air, the dry bulb temperature can be reduced.
- In the case of extreme external conditions, a Direct Expansion (DX) system is available to provide additional (Top-Up) cooling. As an alternative, the Chilled Water (CW) coil can be installed. DX and CW systems are sized to provide partial back up for the overall cooling load and are designed to provide maximum efficiency with minimum energy consumption.

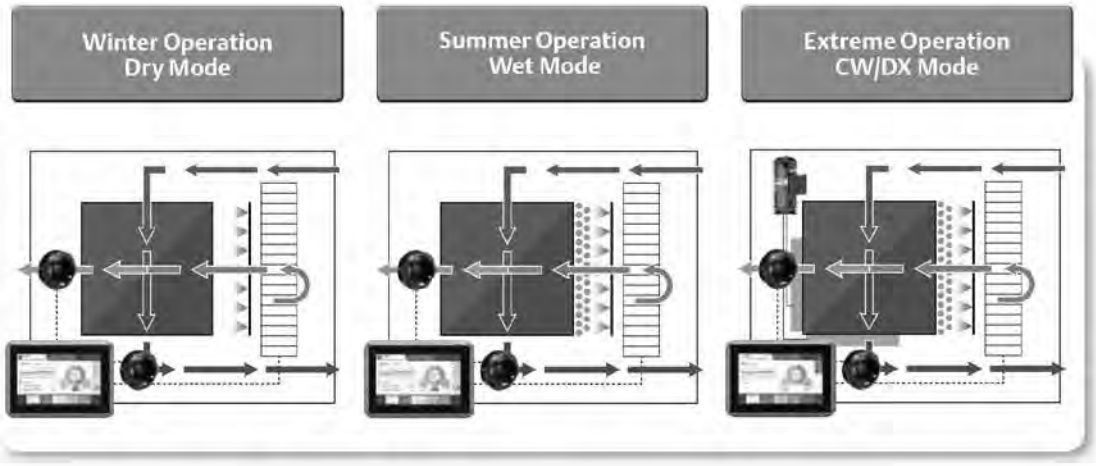



The State-of-the-Art iCOM™ Control

Precise, User-friendly Information at **Unit Level**

To guarantee ASHRAE RECOMMENDED guidelines

- Extreme Winter Operation (i.e. temperatures <-20°C) can cause the unit's unrequired internal dehumidification causing it to exceed ASHRAE recommended minimum humidity. Liebert® EFC offers a constant control of data center air via its integrated iCOM control logic, ensuring dew point temperature is lower than heat exchanger surface temperature, thus avoiding unrequired dehumidification.

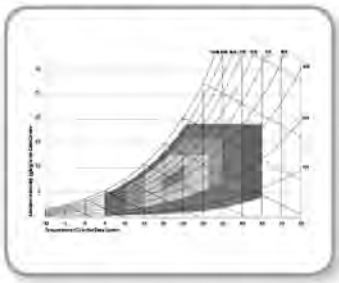

To provide PRECISE TEMPERATURE AND AIRFLOW CONTROL

- The SmartAisle™ control logic embedded in the iCOM optimizes internal air volumes and temperatures according to specific server needs.
  SmartAisle logic allows Liebert EFC to exactly match the servers' airflow needs, ensuring that not even a single Watt is wasted in moving or cooling unrequired air.



To optimize WATER and ELECTRICITY costs

- The user friendly iCOM Control exploits the management of energy and water also at teamwork level. The system collects information from the different units' key parameters and operating modes (dry, wet and DX/CW) while taking into account water and electricity costs. The control predictively calculates and then implements the combination which optimizes operating costs.



Utmost Efficiency Even at the **Data Center System Level**

The iCOM Control manages the operation of the Liebert EFC units, in order to ensure top reliability in all conditions. Access to the units installed in the data center, is granted through the Ethernet connection, that is capable of coordinating the multiple on-site installations. The high-level supervision of multiple units allows these to work together as a single system, thus optimizing overall system performance.

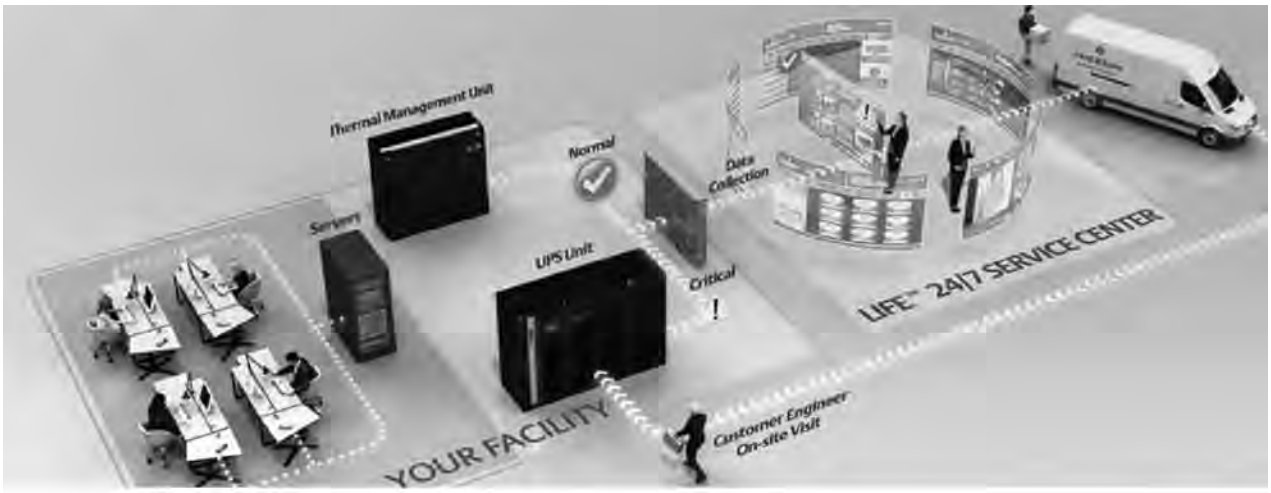

LIFE™ Remote Diagnostic and Preventive Monitoring Service

Emerson Network Power's service program is designed to ensure that your critical Thermal Management system is maintained in an optimum state of readiness at all times.
The **LIFE** remote diagnostic and preventive monitoring service provides early warning of Thermal Management conditions and out of tolerances. This allows effective proactive maintenance, fast incident response and remote trouble shooting, giving customers complete security and peace of mind.



With **LIFE** services you will benefit from:

Uptime Assurance
Constant monitoring of the units' parameters, thus maximizing the system's availability.

First Time Fix Rate
Pro-active monitoring and data measuring ensure that when our customer engineers are dispatched on-site, they arrive prepared for first time resolution.

Proactive Analysis
From LIFE service centers, our experts proactively analyze the data and trends of your equipment, to recommend actions to ensure their best performance.

Minimized Total Cost of Ownership of Your Equipment
The continuous monitoring of all relevant parameters in turn maximizes unit performance, reduces on-site maintenance and extends the life of your equipment.

Fast Incident Response
LIFE allows for immediate definition of the best course of action, as a result of the regular communication between your **Liebert® EFC** unit and our **LIFE** service centers.

Reporting
You will receive a comprehensive report detailing the working order of your equipment and its operational performance.

Liebert® EFC Configurations

Perimeter Configuration		Roof Configuration
		
ASHRAE Recommended, ASHRAE Allowable (A1-A4)	**Suggested Working Area**	ASHRAE Recommended, ASHRAE Allowable (A1-A4)
- Air-to-air heat exchange and evaporative cooling in one footprint - EC Fans - With DX or CW coil for mechanical back-up - SmartAisle™	**Liebert EFC: The future of data center solutions**	- Air-to-air heat exchange and evaporative cooling in one footprint - EC Fans - With DX or CW coil for mechanical back-up - SmartAisle™
a) Green field sites b) Warehouse data centers	**Where it is most commonly applied**	a) Data centers located on the top of the building b) City center applications
This configuration requires space for installation and maintenance, especially in city centers.	**Application Constraints**	This configuration requires to be on top of the building floor and to have enough space on the roof for the units' installation.
Liebert EFC with a downflow configuration provides advantages in terms of simplified installations for the customer.	**Benefits of Emerson Network Power Solutions**	Liebert EFC with roof configuration provides indirect evaporative freecooling for roof applications.

Liebert® EFC Energy Savings

The Liebert EFC indirect evaporative freecooling unit takes advantage of the external air temperature to achieve ultimate energy savings for data centers. The main source of cooling derives from the outside air and the evaporative system, which is then transferred to the data center via the highly efficient fans and air-to-air heat exchanger. The Liebert EFC has thus been designed to achieve a pPUE level between 1.03 and 1.06 (depending on the environmental conditions).

Comparison between Annual Energy Consumption and Annual Energy Cost at Varying pPUE

pPUE	Annual Energy Consumption (kWh)	Annual Energy Cost (€)
1.6	5,256,000	630,720
1.2	1,752,000	210,240
1.1	876,000	105,120
1.06	525,600	63,072
1.03	**262,800**	**31,536**

A 1 MW data center has been considered for calculation purposes

The Liebert EFC delivers substantial reductions and savings in terms of electrical infrastructure and equipment. With the unit being installed externally, the available internal white space is maximized ensuring ease of system installation. All of these features significantly reduce data center TCO.



Customer Experience Center

Thermal Management

Emerson Network Power's newest Customer Experience Center located in Tognana (Padova - Italy), is specifically designed for customers to interact with Thermal Management data center technologies. The center gives our customers the unique opportunity to witness pre-installation demonstrations, covering technical performance, interoperability and efficiency of Emerson Network Power's Thermal Management solutions under a broad range of real field conditions. Customers visiting the center may also benefit from a comprehensive consultation from our R&D, engineering and application specialists.



Evaporative Cooling Validation Area

Our Thermal Management Customer Experience Center features a dedicated area to test the state-of-the-art Liebert® EFC - Emerson Network Power's highly efficient indirect evaporative freecooling unit.
The scope of the Evaporative Cooling Validation Area is to provide customers, consultants and data center specialists with the most complete testing area to experience the capabilities of our evaporative technology at peak conditions.
Testing parameters include IT loads up to 400 kW and an airflow of up to 100,000 m^3 per hour at any external ambient temperature required to simulate typical peak conditions across EMEA region.
All our measuring tools are periodically tested to adhere to the current international quality procedure ISO9001. This guarantees that all our measurements are in line with the metrological laboratories' standards (Accredia/EA/ILAC) and that our equipment precision level is also compliant with the European EN14511 standard.
Every customer visit is accompanied by a complete final report which includes each and every tested parameter as well as the relevant outputs for the specific Thermal Management unit validated. With our constant focus on our customers' needs, we guide them through a first-hand experience with full transparency and flexibility enabling them to achieve the highest standards of technical excellence.

Emerson Network Power

Thermal Management Data Center Infrastructure for Small and Large Applications



Liebert® HPC

Wide range of high efficiency Freecooling Chillers from 40 kW to 1600 kW

- Designed specifically for data center applications and to work with SmartAisle™
- Premium energy efficiency version
- iCOM™ Control featured



Liebert® PDX - Liebert® PCW

Liebert PDX available from 15-120 kW
Liebert PCW available from 30-220 kW

- Premium energy efficiency
- Eurovent certified performance
- Unique control capabilities with the iCOM Control



Liebert® EFC

Indirect evaporative freecooling unit

- iCOM Control featured
- New generation EC Fans
- Eurovent certified heat exchanger

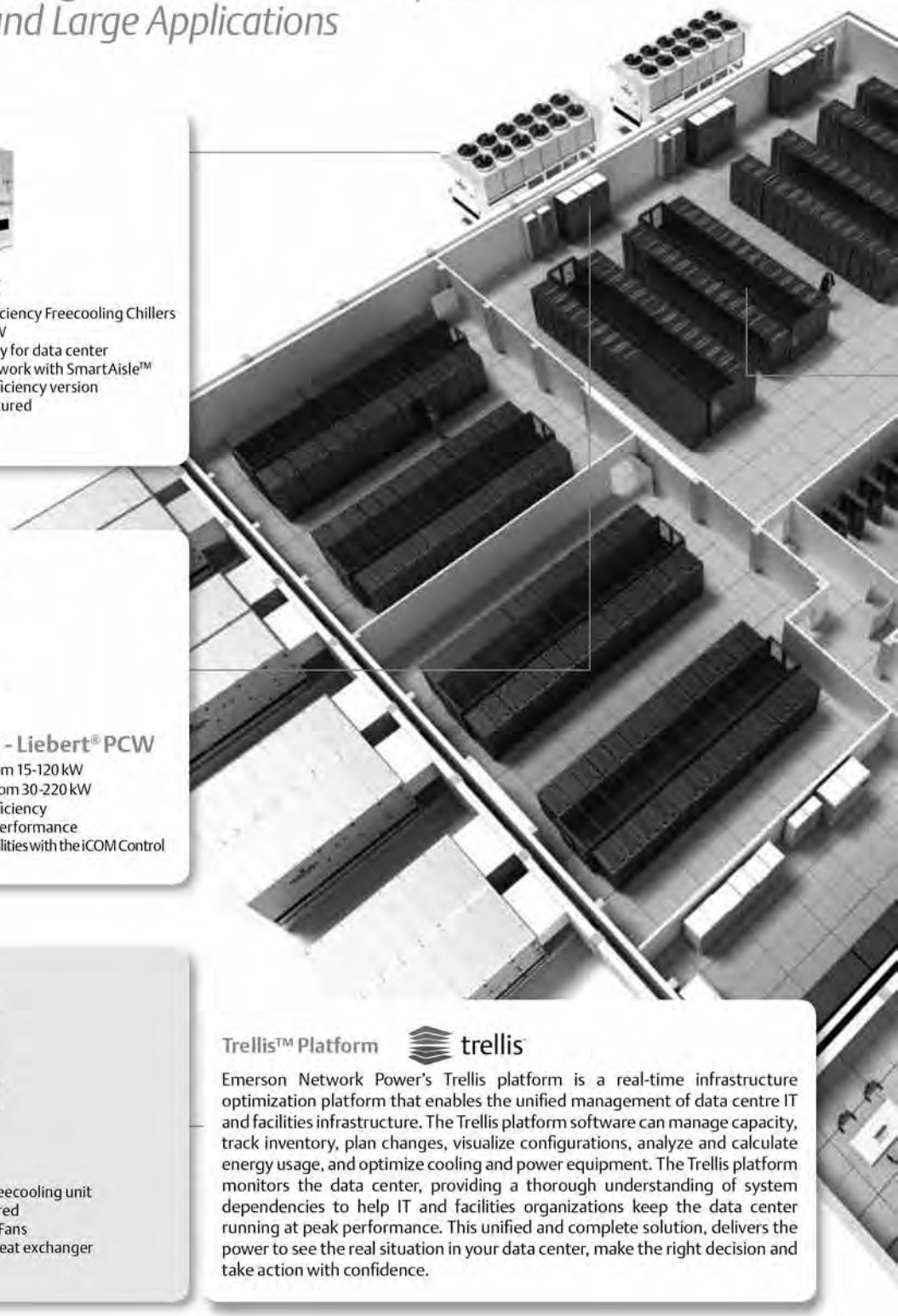

Trellis™ Platform

trellis

Emerson Network Power's Trellis platform is a real-time infrastructure optimization platform that enables the unified management of data centre IT and facilities infrastructure. The Trellis platform software can manage capacity, track inventory, plan changes, visualize configurations, analyze and calculate energy usage, and optimize cooling and power equipment. The Trellis platform monitors the data center, providing a thorough understanding of system dependencies to help IT and facilities organizations keep the data center running at peak performance. This unified and complete solution, delivers the power to see the real situation in your data center, make the right decision and take action with confidence.



Liebert® AFC

The Adiabatic Freecooling Chiller available from 500-1450 kW

- Integrated adiabatic pad system
- High freecooling capacity
- 100% compressor back up

SmartAisle™

- Aisle containment
- Provides highest energy efficiency
- Works with any Liebert Thermal Management unit

Liebert® CRV

Row-based high efficiency cooling units available from 11-50 kW in DX and CW versions

- Full airflow and cooling capacity modulation to match server load and to save energy
- Best footprint capacity with the highest efficiency
- Six different control modes to ensure greater flexibility

Liebert® XD

Refrigerant based high density cooling installed close to the server

- Hot spot management for up to 30 kW per rack
- On-demand upgrade with plug and play
- High efficiency and 100% sensible cooling

Service

Emerson Network Power supports entire critical infrastructures with the largest global service organization and an extensive service offering, enhancing network availability and ensuring total peace of mind 24/7. Our approach to servicing critical infrastructure covers all aspects of availability and performance: from single power and thermal management equipment to entire mission-critical systems.
The most comprehensive insurance for business protection can be obtained with a service program from Emerson Network Power which includes access to LIFE™.



LIFE™

LIFE provides remote diagnostics and preventive monitoring service for UPS and thermal management equipment.
LIFE delivers increased uptime and operational efficiency by enabling continuous monitoring of your equipment, expert data analysis and field engineering expertise.
Through the data transferred from your equipment via LIFE, our remote service experts gain the real-time insight and information needed to quickly identify, diagnose, and resolve any irregularities that may arise in operation, ultimately taking responsibility for your critical assets 24/7.

This page is intentionally left blank.

Emerson Network Power Asia

Australia
T: 61-2-97438555
F: 61-2-97438737

Japan
T: 81-3-54038564
F: 81-3-54032919

Korea
T: 82-2-34831500
F: 82-2-5927886

Malaysia
T: 603-78845000
F: 603-78845188

New Zealand
T: 64-3-3392060
F: 64-3-3392063

Pakistan
T: 92-42-36622526 to 28
F: 92-42-36622530

Philippines
T: 63-2-7207400
F: 63-2-6203693

Singapore
T: 65-64672211
F: 65-64670130

Thailand
T: 66-2-6178260
F: 66-2-6178277 to 78

Vietnam
T: 84-4-37628908
F: 84-4-37628909

www.EmersonNetworkPower.Asia

While every precaution has been taken to ensure accuracy and completeness herein, Emerson Network Power assumes no responsibility, and disclaims all liability, for damages resulting from use of this information or for any errors or omissions. Specifications are subject to change without notice.

Emerson Network Power is a trademark of Emerson Electric Co. or one of its affiliated companies. All other names and logos referred to are trade names, trademarks, or registered trademarks of their respective owners. ©2016 Emerson Electric Co.

AP16ENT-CONSULTANTKIT-BR