SINGER VALVE

*Result-Based Solutions. Globally.*™

# Dynamic Lifter® Pressure Relief Valve



- **Ideal for sewage, dirty & raw water applications**
- **Smaller size, smaller footprint & reduced cost**
- **Low maintenance**

**singervalve.com**

# Dynamic Lifter® Pressure Relief Valve

## *Outsmart surges!*

The patented Dynamic Lifter® is a direct-acting spring-loaded relief valve that opens when the inlet pressure exceeds the set-point. It closes drip-tight when pressure falls below the set-point. The valve can be serviced easily by applying external pressure (such as a hand pump) to the test connection, opening the valve for routine maintenance. Available in two versions: Spring or Air Operated. The air actuated design is used for higher relief pressures or when pressurized air actuation is preferred. Also, because of its smaller profile, it is ideal for applications with space limitations.



Region of York (Nobleton) installation
Ontario, Canada

## Model A-106-DL | Dynamic Lifter® Spring Pressure Relief Valve

Traditional design of relief valves for sewage service has not changed for many years. The Singer Valve Dynamic Lifter® is an established and patented product, designed for minimum (hygienic) maintenance with assurance that it will open quickly and consistently when needed.

- Operating oil is separated from sewage by the chamber and diaphragm isolator (2).
- System pressure is applied to piston (1A) by mineral oil and isolator (2).
- Piston and closing speed controls operate in clean non-contaminating environment.

**BENEFIT:** Low maintenance.

- System (over) pressure is applied to the opening piston (1A) throughout the full stroke.
- Allows more relief flow as it does not lose opening force as the inner valve leaves the seat.

**BENEFIT:** Smaller size and reduced cost.

- By closing valve (4), external pressure may be applied through port (9) and on to piston (1A) by the mineral oil opening of the Dynamic Lifter (1).
- Even a tire pump or compressed air may be used to open the valve and check the relief setting or flush stringy material from the seat.

**BENEFIT:** Hygienic and minimal time to flush and test operations.

- Where conventional spring operated valves allow build-up of waste-water residue (dry pack) on the valve's downstream and exhaust pipe to sump, Singer's A106-DL can easily be opened fully, through the actuator, to flush out these unwanted build-ups.

**BENEFIT:** Ease of maintenance.



A106-DL

- Heat fused, heavy epoxy coating inside and out, 316 stainless steel seat (1C) and stem (1B). The stem is also oxy-nitride coated to reduce mineral or debris build-up.

**BENEFIT:** Premium materials and coating reduce maintenance and provide the lowest long-term cost of ownership.

### CLIENTS WHO USE THE DYNAMIC LIFTER

- Public Service Commission, Tijuana, Mexico
- Halifax Regional Municipality, Nova Scotia, Canada
- Hamilton, and Regions of Halton and Peel, Ontario, Canada
- Borough of Phoenixville, Pennsylvania

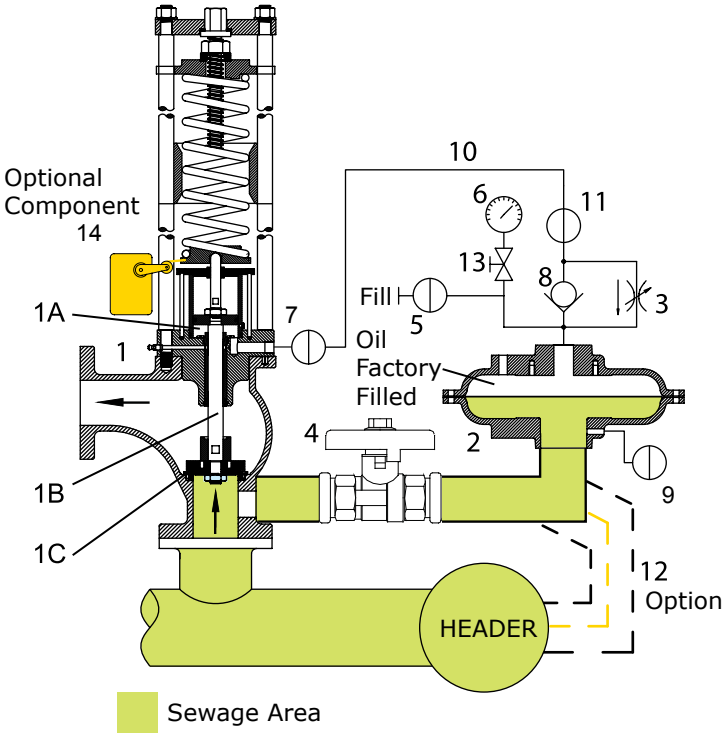


1. Model A106-DL - body
(1A) Piston, (1B) Stem, (1C) Seat
2. Chamber and diaphragm isolator
3. Closing speed control needle valve
4. Isolating valve
5. Oil fill isolating valve
6. Pressure gauge
7. Isolating valve
8. Swing check valve
9. Isolating valve – external pressure for test and flush cycle
10. 3/8" NPT flexible hose
11. Isolating valve
12. (Optional) Field connection by others
13. Model 852B gauge cock
14. Limit Switch (optional)

## Typical Application

Application drawing is applicable to both A-106-DL and A-106-DL-Air.

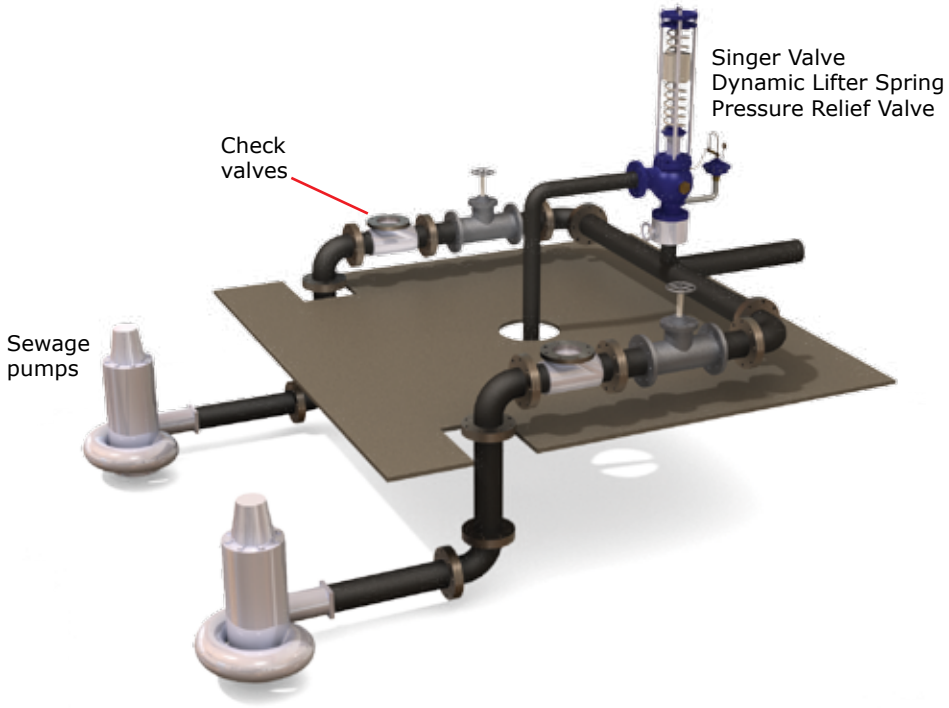

# Dynamic Lifter® Pressure Relief Valve

## Model A-106-DL-Air | Dynamic Lifter® Air Operated Pressure Relief Valve

## Model A-106-DL-Air-ET | Surge Anticipating Electronically Timed DL Pressure Relief Valve

A compact sewage relief valve that is suitable for high pressures, responds very quickly and retains all the features and benefits of the Spring–Hydraulic version. It is an attractive solution to what may be otherwise a difficult application due to higher pressures or space (height) limitations.

- Operates using separate compressed air supply
- An inexpensive 120 psi (8.3 bar) air compressor may be used for 200 psi (13.8 bar) or higher relief pressures by using a large diameter closing piston (1A).

**BENEFIT:** Inexpensive Control Source for large pressure range.

- Using a chamber and diaphragm isolator (8), an accurate hydraulic pilot (4) opens reliably and repeatedly at its set pressure (gauge 5A).
- Full operational (including pilot) check is quickly and cleanly performed by closing valve (7) and applying pressure at (2C). For quick flush open (3B).

**BENEFIT:** Operation check of all components with flushing is quick and sanitary.

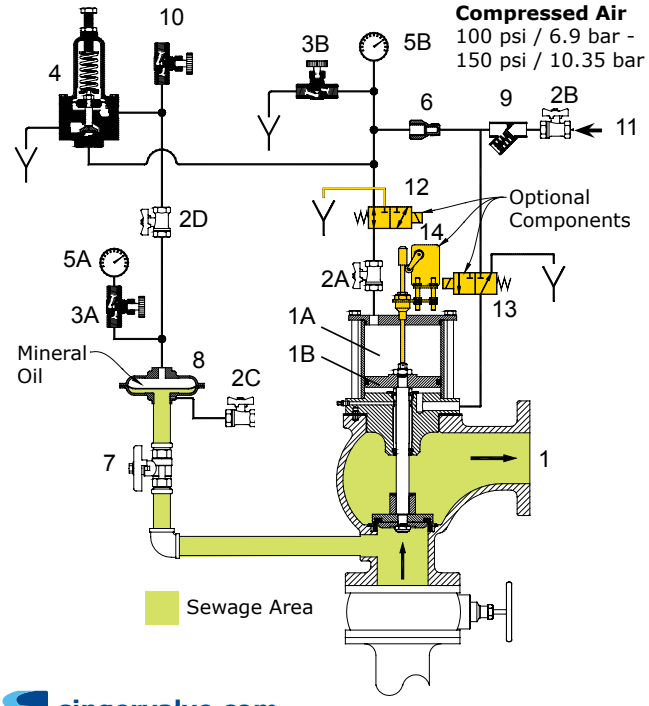


- As an option, two 3-way solenoids (12, 13) may be included to force the valve open on power failure. A backup control panel is required to time the reclosure.


A106-DL-ET

**BENEFIT:** The solenoids convert the relief valve function to a surge anticipating valve if needed, particularly if there is a risk of the system going sub-atmospheric. Air pressure through solenoid (13) holds the valve open until closed by the electrical controls.

- The check valve (9) maintains air in the operating cylinder (1B) should the air supply fail.
- Provided the air supply is above minimum, variations in pressure do not affect the valve operation, which is controlled independently by the accurate pilot (4).

The main valve (1) is constructed of the same premium materials as the Hydraulic Dynamic Lifter® for long life and minimum maintenance.

1. Model A106-DL-Air - body
(1A) Piston, (1B) Cylinder
2A, 2B, 2C, 2D, Isolating Valves
3A, 3B, Needle Valve
4. Relief Pilot: 81-RP
5A, 5B, Pressure Gauge
6. Fixed Restriction
7. Isolating Valve – Sewage
8. Chamber and Diaphragm Isolator
9. Check Valve, J0040A
10. Bleed Valve
11. Air Supply
12. Optional Solenoid
13. Optional Solenoid
14. Optional Limit Switch Assembly

Note: Alternate orientation option available—consult with factory.

## Dynamic Lifter Sizing Graph Curve: 3 in / 80 mm - 8 in / 200 mm

Conventional relief valves for sewage are typically sized "larger" than a Singer Valve Dynamic Lifter due to opening forces being lost as the inner valve leaves the seat.

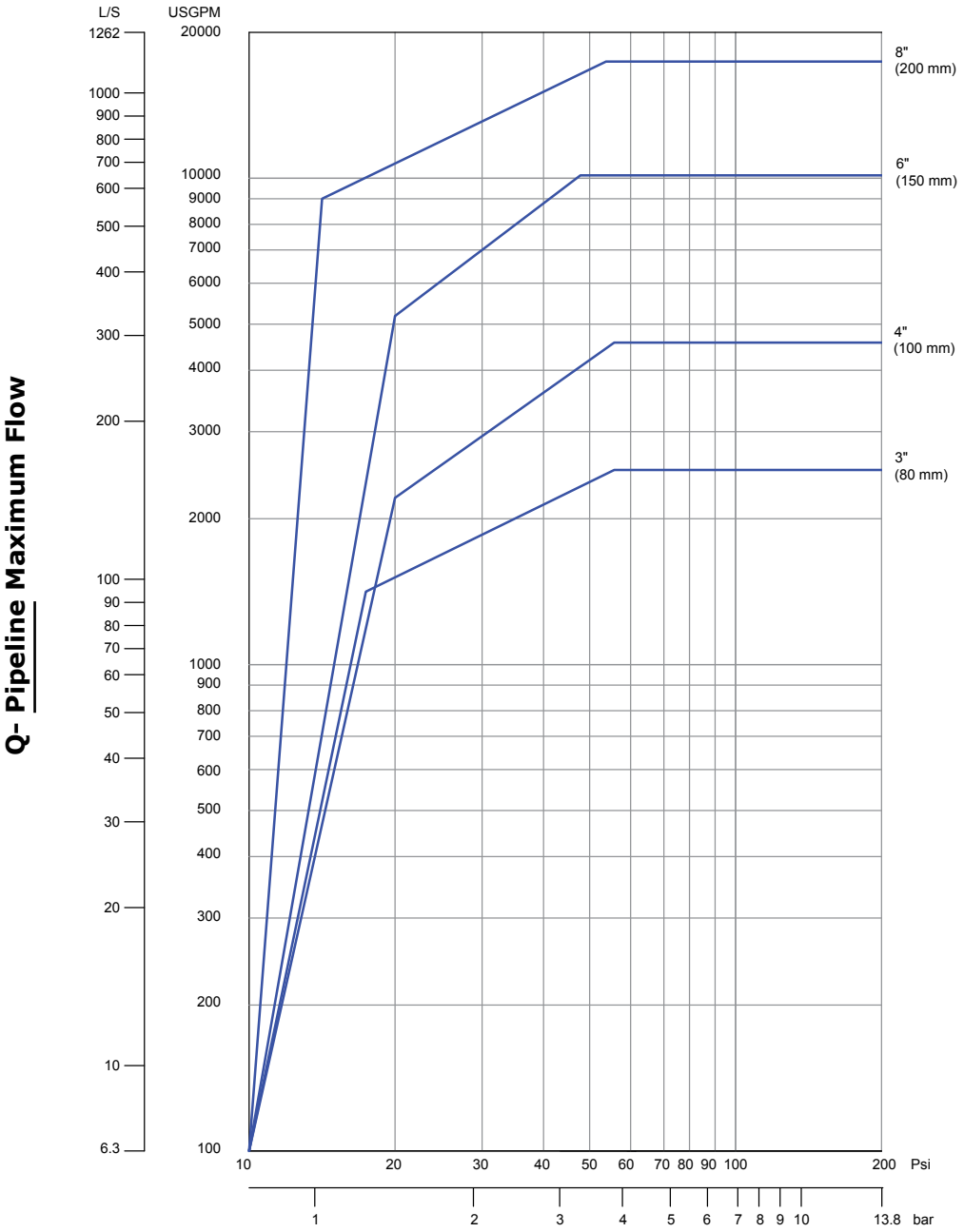


Consult Singer Valve for higher pressures.

**ΔP - Minimum pressure drop across dynamic lifter.**

Examples of valve size selection:

1) Relief setting 80 psi / 5.5 bar - discharge to atmosphere: Max. flow in main pipeline 1,200 USGPM / 75.7 l/s - Find intersect of 80 psi / 5.5 bar ΔP and 1200 USGPM / 75.7 l/s flow. Select next larger size Dynamic Lifter, for example, 3 in / 80 mm size.
2) Relief setting 55 psi / 3.8 bar - discharge 20 psi / 1.38 bar back pressure: Max. flow in main pipeline 4,000 USGPM / 252.4 l/s Find intersect of 55 psi – 20 = 35 psi / 2.4 bar ΔP and 4000 USGPM / 252.4 l/s flow. Select next larger size Dynamic Lifter, for example, 6 in / 150 mm size.

Note:

- If the discharge was to atmosphere, ΔP = 55 psi / 3.8 bar and 4 in / 100 mm size would be selected.
- This graph is based on current practice for standard applications. It is intended to be a guide only and no selection guarantee is implied or intended.

## Valve Sizing and Measurements

| A106-DL ANSI DATA (US UNITS) | SINGLE SPRING STACK | | | | | | | | DOUBLE SPRING STACK | | | |
|---|---|---|---|---|---|---|---|---|---|---|---|---|
| **Size** | **3 in** | | **4 in** | | **6 in** | | **8 in** | | **6 in** | | **8 in** | |
| | **Relief Settings (psi)** | | | | | | | | | | | |
| Spring Specific Ranges | Min | Max | Min | Max | Min | Max | Min | Max | Min | Max | Min | Max |
| | 25 | 90 | 20 | 65 | 15 | 30 | 10 | 15 | 40 | 90 | 30 | 50 |
| | 70 | 200 | 60 | 145 | 25 | 60 | 15 | 30 | 90 | 160 | 50 | 80 |
| | Other ranges available, consult with Singer Valve | | | | | | | | | | | |
| **Lift / Opening** | **2 in** | | **2 in** | | **2 1/2 in** | | **3 in** | | **2 1/2 in** | | **3 in** | |
| Dimension A | 9 in | | 10 in | | 11.5 in | | 14 in | | 11.5 in | | 14 in | |
| Dimension B | 38.5 in | | 39.5 in | | 43.75 in | | 45.75 in | | 25.25 in | | 26.75 in | |
| Dimension C | 30.5 in | | 30.5 in | | 32 in | | 32 in | | 32 in | | 32 in | |
| Dimension D | 4.75 in | | 5.75 in | | 7.5 in | | 10 in | | 15.25 in | | 18.25 in | |

| A106-DL ANSI DATA (METRIC UNITS) | SINGLE SPRING STACK | | | | | | | | DOUBLE SPRING STACK | | | |
|---|---|---|---|---|---|---|---|---|---|---|---|---|
| **Size** | **80 mm** | | **100 mm** | | **150 mm** | | **200 mm** | | **150 mm** | | **200 mm** | |
| | **Relief Settings (bar)** | | | | | | | | | | | |
| Spring Specific Ranges | Min | Max | Min | Max | Min | Max | Min | Max | Min | Max | Min | Max |
| | 1.72 | 6.21 | 1.38 | 4.48 | 1.03 | 2.07 | 0.69 | 1.03 | 2.76 | 6.21 | 2.07 | 3.45 |
| | 4.83 | 13.79 | 4.14 | 10.00 | 1.72 | 4.14 | 1.03 | 2.07 | 6.21 | 11.03 | 3.45 | 5.52 |
| | Other ranges available, consult with Singer Valve | | | | | | | | | | | |
| **Lift / Opening** | **50 mm** | | **50 mm** | | **64 mm** | | **76 mm** | | **64 mm** | | **76 mm** | |
| Dimension A | 229 mm | | 254 mm | | 292 mm | | 356 mm | | 292 mm | | 356 mm | |
| Dimension B | 978 mm | | 1004 mm | | 1112 mm | | 1162 mm | | 641 mm | | 680 mm | |
| Dimension C | 775 mm | | 775 mm | | 813 mm | | 813 mm | | 813 mm | | 813 mm | |
| Dimension D | 121 mm | | 146 mm | | 191 mm | | 254 mm | | 387 mm | | 464 mm | |

| A106-DL ANSI DATA (US UNITS) | AIR OPERATED | | | |
|---|---|---|---|---|
| **Size** | **3 in** | **4 in** | **6 in** | **8 in** |
| | **Relief Settings (psi)** | | | |
| Pressure Ranges | Options Available up to 200 psi, consult with Singer Valve | | | |
| **Lift / Opening** | **2 in** | **2 in** | **2 1/2 in** | **3 in** |
| Dimension A | 9 in | 10 in | 11.5 in | 14 in |
| Dimension B* | 22.5 in | 23.5 in | 25.5 in | 28.88 in |
| Dimension C | 30.5 in | 30.5 in | 32 in | 32 in |
| Dimension D | 4.75 in | 5.75 in | 7.5 in | 10 in |

| A106-DL ANSI DATA (METRIC UNITS) | AIR OPERATED | | | |
|---|---|---|---|---|
| **Size** | **80 mm** | **100 mm** | **150 mm** | **200 mm** |
| | **Relief Settings (bar)** | | | |
| Pressure Ranges | Options Available up to 13.8 bar, consult with Singer Valve | | | |
| **Lift / Opening** | **50 mm** | **50 mm** | **64 mm** | **76 mm** |
| Dimension A | 229 mm | 254 mm | 292 mm | 356 mm |
| Dimension B* | 572 mm | 597 mm | 648 mm | 734 mm |
| Dimension C | 775 mm | 775 mm | 813 mm | 813 mm |
| Dimension D | 121 mm | 146 mm | 191 mm | 254 mm |

Pneumatic operational ranges up to 200 psi / 13.8 bar.

Consult your local representative, or factory, for higher pressures.

## A Variety of Models to Choose From

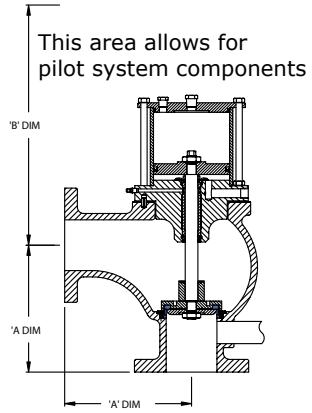


Pneumatic
(All Pressure Ranges Plus Excessive Pressures)

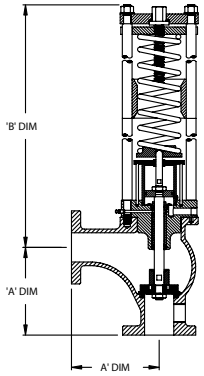


Single Spring Stack
(Lower Pressure Ranges)

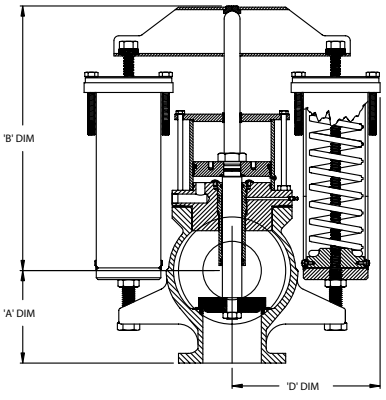


Double Spring Stack
(Higher Pressure Ranges)

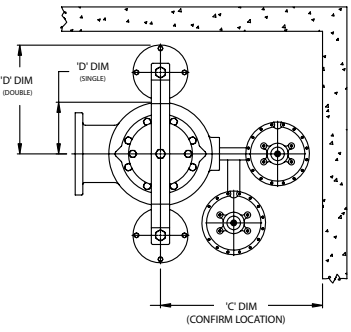


Assembly Clearance
(Applicable To All Models)

## Specifications

### A106-DL Spring

The sewage pressure relief valve shall be direct acting spring loaded angle style and shall open fully and quickly when the system pressure exceeds the valve set point.

The closing speed shall be adjustable. The valve is to close drip tight when pressure is below the set point.

A separation chamber and diaphragm shall transmit pressure to an opening piston to assist the opening forces.

Provision shall be made to readily connect external pressure and test cycle the valve opening to confirm the opening and closing, and the relief pressure. It will flush out materials that may be clogging the valve flow or causing a sticking stem or preventing drip tight closing. It shall assist in flushing dry pack on the downstream side of the valve. The maintenance test is to be clean and sanitary.

The construction is to be suitable for long life when used in a raw sewage environment.

Prior to shipping the standard factory test shall include cycling at full stroke at the requested relief setting, drip tight leakage test and over pressure shell test.

The Sewage Relief Valve shall be ANSI Class 150 / PN 16 flanges size __ in / __ mm. Spring range __ psi / __ bar to __ psi / __ bar factory set at __ psi / bar. The valve shall have all the features and functions of the Singer Model A106-DL or approved equal.



Region of Peel installation - Ontario, Canada

### A106-DL-Air

The sewage pressure relief valve shall be compressed air actuated, angle style and open fully and quickly when the system pressure exceeds the valve set point. The closing speed is to be adjustable. The valve shall close drip tight when system pressure is below the valve set point.

A separation chamber and diaphragm shall transmit the system pressure (using mineral oil) to an accurate but easily adjustable hydraulic pilot.

Compressed air will be supplied by others at a pressure exceeding 100 psi / 6.9 bar to actuate a piston to close the valve.

Sewage system pressure above the set point shall cause the pilot to release air from the chamber that holds the sewage relief valve closed.

For a complete maintenance check it shall be possible to apply pressure to the separation chamber and check the opening pressure of the hydraulic pilot and the main valve.

A separate means of lowering the air pressure in the main chamber is to be provided for a quick flush cycle. It shall assist in flushing dry pack on the downstream side of the valve. The maintenance testing is to be clean and sanitary.

The construction is to be suitable for long life when used in a raw sewage environment.

Prior to shipping the standard factory tests shall include cycling at full stroke at the requested relief setting, drip tight leakage test and over pressure shell test of both the valve and air chamber.

The Sewage Relief Valve shall be ANSI Class 150 (PN 16) flanges, Size ____ in / ____ mm. Operating relief range ____ psi / ____ bar to ____ psi / ____ bar with air supply between 100 psi / 7 bar and 150 psi / 10.4 bar. Factory relief setting ____ psi / ____ bar.

The valve shall have all the features and functions of the Singer Model A106-DL-Air or approved equal.

# SINGER VALVE

*Result-Based Solutions. Globally.*

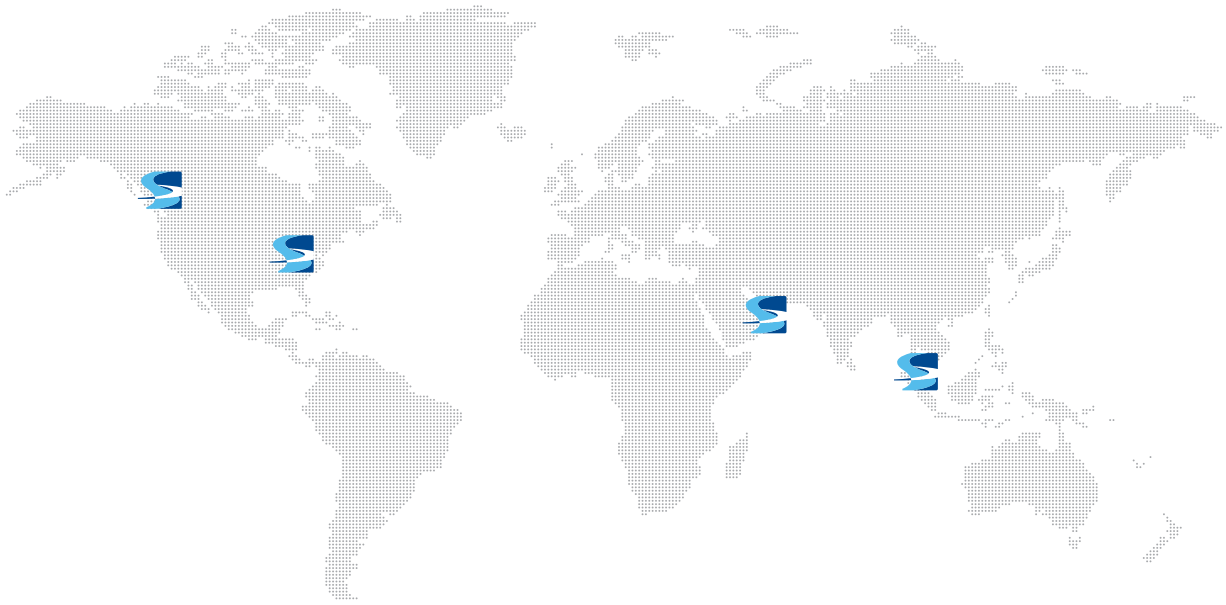


**Canada Head Office**

12850 – 87th Avenue
Surrey, BC V3W 3H9
Canada

Tel: (604) 594 5404
Fax: (604) 594 8845
Toll Free Fax (Canada & USA):
1 800 663 7266
✉ singer@singervalve.com

**USA Office**

*Mailing Address*
Singer Valve LLC
PO Box 668588
Charlotte, NC 28266

*Shipping Address*
1873 Scott Futrell Drive
Charlotte, NC 28208

Tel: (704) 391 5785
Fax: (704) 391 5768
Toll Free (USA):
1 888 764 7858
✉ mark@singervalve.com

**United Arab Emirates Office**

Canadian National Valves FZE
PO Box 121326
SAIF Free Zone
Q3 – Unit 94
Sharjah International Airport
FREE ZONE
Sharjah, UAE

Tel: +971 6 557 8116
Fax: +971 6 557 8117
✉ canadian@singervalve.com

**Malaysia Office**

SVM Water Controls Sdn. Bhd.
No 6, Jalan MJ 4, Medan Maju Jaya,
Batu 7, Jalan Kelang Lama
46200 Petaling Jaya
Selangor Darul Ehsan, Malaysia

Tel: 603 7784 4043 / 7784 4044
Fax: 603 7781 8312
✉ svmwc@tm.net.my



MIX
Paper from responsible sources
FSC® C014956



*RCM-2012*


**singervalve.com**