SINGER VALVE
Result-Based Solutions. Globally.

12850-87th Avenue
Surrey, BC. Canada. V3W 3H9
Ph: 604-594-5404
Fx: 604-594-8845
www.singervalve.com

SINGER MODEL 106/206-DWX-RPS

Deep Well Pump Control and Pressure Sustaining Valve Schematic A-7478A
Installation, Operating and Maintenance Instructions

DESCRIPTION:

Model 106/206-DWX-RPS is a pump control valve that eliminates starting and stopping surges of deep well pumps. During the pumping cycle the valve will also act as a relief/sustaining valve by relieving to atmosphere (clear well or reservoir).

Model 106/206-DWX-RPS is installed in a 'tee' between pump discharge and a check valve with it's outlet to atmosphere.

The pump is started with the valve fully open to avoid any starting surges. The valve closes slowly to gradually start the flow into the system. On shut down the valve opens slowly to remove the flow gradually and when the valve is open, the pump is shut down.

DESCRIPTION OF OPERATION:

Main Valve (1) is spring loaded open. When the line pressure is connected to the bonnet, the valve closes tight. Refer to 106/206-PGX "Description of Operation". Pressure above the diaphragm determines the position of Main Valve (1). The pressure above the diaphragm is controlled with a pilot circuit consisting of Solenoid Valve (6), Pressure Sustaining Pilot (12) and Speed Controls (5) and (7).

When the pump is off, Main Valve (1) is wide open. When the pump is started, Solenoid Valve (6) is energized at the same time (Refer to wiring diagram A0408). This will direct the line pressure to the bonnet of Main Valve (1), causing the Main Valve to close. Closing speed is determined by the setting of Closing Speed Control (5). As the valve closes, flow will commence to the system.

During the pumping cycle, Pressure Sustaining Pilot (12) senses the inlet pressure of the Main Valve and opens when the pressure exceeds the setpoint of Pilot (12). When Pilot (12) opens, Main Valve (1) opens. Pilot (12) modulates the Main Valve (1) to prevent the inlet pressure from exceeding the setpoint of Pilot (12).

When the shut-down cycle is initiated, Solenoid Valve (6) is de-energized to open Main Valve (1). Opening speed is determined by the setting of Opening Speed Control (7). While the valve is opening, the pump is kept running by Limit Switch (8). After the main line check valve has closed, Limit Switch (8) shuts the pump.

INSTALLATION:

1. For most convenient operation and maintenance, manual shut off valves should be installed ahead of the valve and where necessary, after the valve.

2. Install a pressure gauge upstream of the valve. This facilitates setting of the pilot system.

3. Provide space around the valve for service.

4. Flush the system of all foreign matter before installing the valve.

5. Check direction of flow and install the valve accordingly. There is an arrow cast on the valve body to show direction of flow. Valve inlet is the 'tee' between pump and check valve.

6. CONNECT PRESSURE SUPPLY LINE (2) TO HEADER (System side of pump check valve). This connection is marked "CONNECT TO HEADER'.

7. Check Solenoid Valve (6) nameplate for correct pressure. Check side of coil for correct voltage. Connect control wiring to Solenoid Valve (6) and Limit Switch (8) as shown on applicable drawing. Wiring diagram A0408 is included in this manual for reference only and to help explain the operation of the valve. WIRING MUST COMPLY WITH LOCAL AND NATIONAL ELECTRICAL CODES.

SINGER VALVE
Result-Based Solutions. Globally.

12850-87th Avenue
Surrey, BC. Canada. V3W 3H9
Ph: 604-594-5404
Fx: 604-594-8845
www.singervalve.com

ADJUSTING PROCEDURE:

1. Ensure that Isolating Valve (3) is open.

2. Set Closing Speed Control (5) and Opening Speed Control (7) 1/2 turn open.

3. Start the pump. Main Valve (1) starts to close. Adjust Closing Speed Control (5) to required closing speed. Turn clockwise for reduced speed, counterclockwise for increased speed.

4. Adjust Pressure Sustaining Pilot (12) for relief setting. See 81-RP Instructions for details.

5. Turn the selector switch off to start the shut-down cycle. Adjust Opening Speed Control (7) to desired opening speed. Turn clockwise for reduced speed, counterclockwise for increased speed.

6. Adjust Limit Switch (8) to shut the pump shortly after the main line check valve has closed.

SERVICE SUGGESTIONS:

Fails to close:

Lack of pressure in the bonnet due to:

- Lack of pressure in the system. / Isolate the valve to fill the system. (Original start-up to fill the system)
- Connection to header done improperly. / Assure that header pressure reaches Solenoid Valve (6).
- Closing Speed Control (5) closed tight. / Open 1/2 turn or as required.
- Solenoid Valve (6) not energized or not operating properly / Check wiring and refer to Solenoid Valve instructions.
- Pressure Sustaining Pilot (12) set too low. / Set as required. Note that tubing between the Pressure Sustaining Pilot and downstream of the Main Valve can be removed to see whether the pilot is open or closed (when the outlet of the valve is to atmospheric pressure).
- Main Valve diaphragm ruptured or Main Valve obstructed. / Refer to 106-PGX instructions.

Fails to open

1. Opening Speed Control (7) closed tight. / Open 1/2 turn or as required.

2. Solenoid Valve (6) incorrectly wired. / Refer to wiring diagram.

3. Pilot system obstructed between bonnet of Main Valve (1) and downstream. / Release copper fitting at the bonnet connection to open the valve. Locate the obstruction and remove.

A-7478A

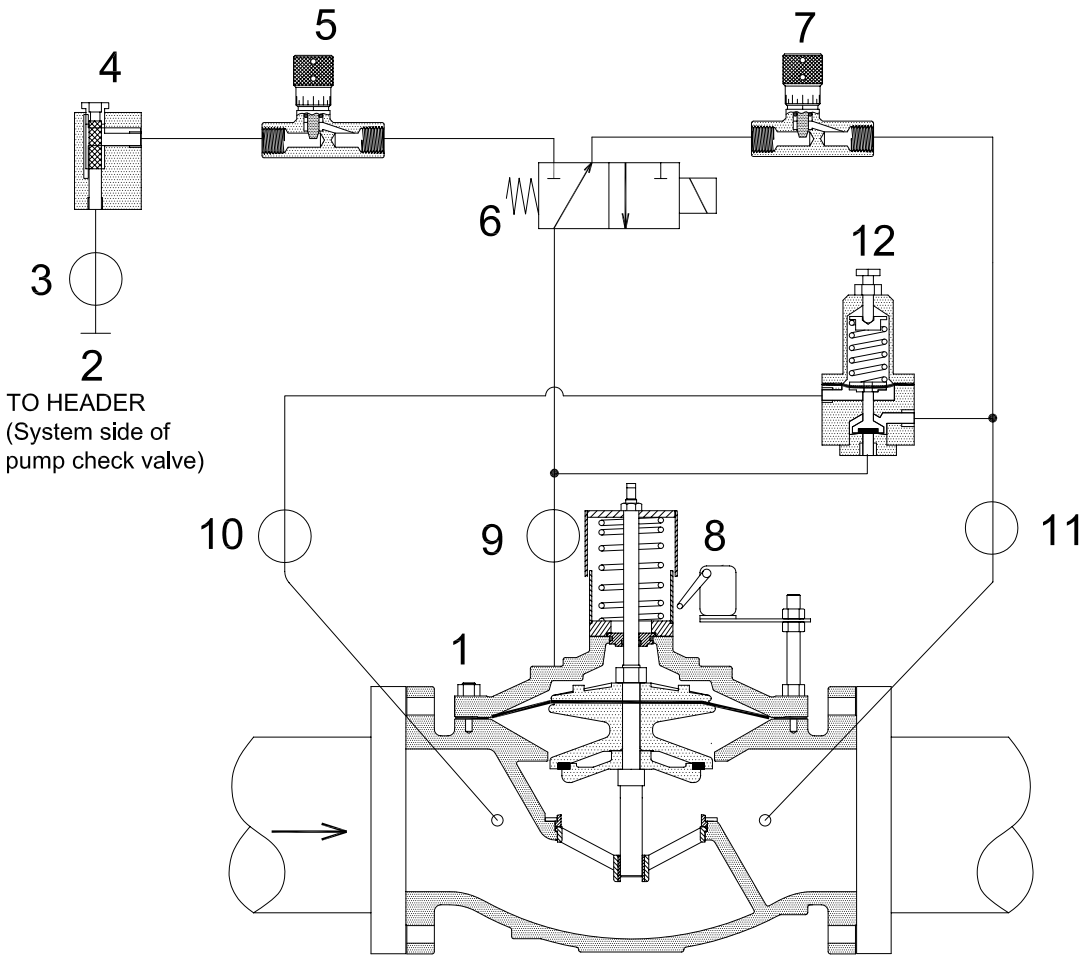

1. Main Valve - Model 106/206-PGX.
2. CONNECTION TO HEADER (System side of pump check valve.
3. Isolating Valve.
4. Strainer - 40 mesh - J0098A.
5. Closing Speed Control - Micrometer Needle Valve.
6. Solenoid Valve - Normally Closed.
7. Opening Speed Control - Micrometer Needle Valve.
8. Limit Switch Assembly - SPDT - Normally Open.
9. Isolating Valve.
10. Isolating Valve.
11. Isolating Valve.
12. Pressure Sustaining Pilot - Model 81-RP.

By-pass Pump Control and
Pressure Sustaining Valve

SINGER VALVE
Result-Based Solutions. Globally.™
www.singervalve.com 12850-87th Avenue. Surrey, B.C. V3W 3H9

Drawn By:	Approved By:
Kari Oksanen	Kari Oksanen
Date:	Drawing:
September 13, 2001	A-7478A

Model 106 or 206-DWX-RPS