SINGER VALVE
Result-Based Solutions. Globally.™

12850-87th Avenue
Surrey, BC. Canada. V3W 3H9
Ph: 604-594-5404
Fx: 604-594-8845
www.singervalve.com

SINGER MODEL 106/206-PR

Pressure Reducing Valve Schematic A0306C
Installation, Operating and Maintenance Instructions

DESCRIPTION:

Model 106-/206PR is a pilot operated pressure reducing valve designed to automatically reduce a high inlet pressure into a lower outlet pressure. The valve will maintain a relatively steady downstream pressure regardless of fluctuations in the supply pressure or flow rate.

NOTE: With any manufactured product there is a risk of malfunction in service, whether by operating conditions such as a plugged strainer or normal wear and tear. Singer Valve recommends regular maintenance with frequency to suit the importance to customers application. We draw attention to our warranty which limits our responsibility to defects in workmanship and materials only. See Singer Valve Inc. Warranty IOM 613 attached and forming part of this Instruction and Operating Manual.

Unless otherwise specified, the valve will be assembled for service temperatures to 180°F (80°C).

DESCRIPTION OF OPERATION:

Main Valve (1) is normally open when pressure is applied to the valve inlet. When the same pressure is applied to the bonnet (above the diaphragm), the Main Valve closes tight. Refer to 106/206-PG 'Description of Operation'. By controlling the pressure in the bonnet, the Main Valve can be made to open fully, close tight or open partially.

Bonnet pressure (and therefore the position of the Main Valve) is controlled by a pilot circuit consisting of Fixed Restriction (5) and Pressure Reducing Pilot (7).

When there is no demand (and the downstream pressure is at the setting of Pilot [7]), Pressure Reducing Pilot (7) is closed. Pressure from the inlet side of the Main Valve is directed to the bonnet through Fixed Restriction (5) and Flow Stabilizer (4). The Main Valve closes. When flow is required, Pilot (7) senses a drop in downstream pressure and opens. Flow through Pilot (7) is greater than flow through Fixed Restriction (5). The bonnet pressure is reduced and the valve opens to supply the demand. The speed of opening is determined by the setting of Flow Stabilizer (4), if so equipped. Refer to Model 26 instructions for details and adjustment.

Under flowing conditions, Pilot (7) reacts to small changes in downstream pressure and modulates the bonnet pressure (and Main Valve position) as required to keep the downstream pressure constant. Note that the Main Valve position follows the position of Pilot (7). When Pilot (7) closes, the Main Valve closes. When Pilot (7) opens, the Main Valve opens.

INSTALLATION:

1. Refer to 106/206-PG 'Installation'.
2. Installation where there is loosely held piping and/or elbows close to the valve may cause the valve to pulsate.

ADJUSTING PROCEDURE:

1. Open Isolating Valves (2) and (6), if so equipped and (8).
2. Crack outlet stop valve and slowly open inlet stop valve wide.
3. Bleed air from Main Valve bonnet. SEE 106/206-PG 'INSTALLATION'.
4. Open outlet stop valve wide.
5. Set reduced (downstream) pressure by turning Pilot (7) adjusting screw: To increase pressure, turn adjusting screw clockwise. - To reduce pressure, turn adjusting screw counterclockwise. **NOTE THAT THERE MUST BE FLOW THROUGH THE VALVE WHEN PRESSURE IS ADJUSTED.**
6. IF THE VALVE DOES NOT OPEN (pressure remains low), check the adjustment of Flow Stabilizer (4), if so equipped. SEE MODEL 26 INSTRUCTIONS.
7. IF THE VALVE BEGINS TO OSCILLATE OR HUNT:

- Bleed air from Main Valve bonnet. SEE 106-PG/206-PG 'INSTALLATION'.
- Adjust Flow Stabilizer (4), if so equipped. SEE MODEL 26 INSTRUCTIONS.

SERVICE SUGGESTIONS:

In addition to service suggestions listed in the 106-PG/206-PG instruction, we suggest the following:

IF THE VALVE FAILS TO CLOSE:

Check that Isolating Valves (2) and (6) are open (if so equipped). Close Isolating Valve (8). If the Main Valve closes, Pilot (7) is defective.

If the valve does not close,[sizes ½" to 3" without Isolating Valves (2) and (6)], leave Isolating Valve (8) closed and close main line isolating valves. Remove the copper line between the inlet of the Main Valve and Flow Stabilizer (4), if so equipped. Plug the upstream body connection. Open upstream isolating valve slowly to pressurize the valve. If there is continuous flow from Flow Stabilizer (4), if so equipped, Main Valve diaphragm is ruptured.

If the valve does not close, [sizes 4" and larger]: Close Isolating Valve (2). Remove the copper tube between Strainer (3) and Flow Stabilizer (4), if so equipped. If there is continuous flow from Flow Stabilizer (4), Main Valve diaphragm is ruptured. If there is no flow from Flow Stabilizer (4), open Isolating Valve (2) slowly. If there is no flow, Strainer (3) is plugged.

A-0306C

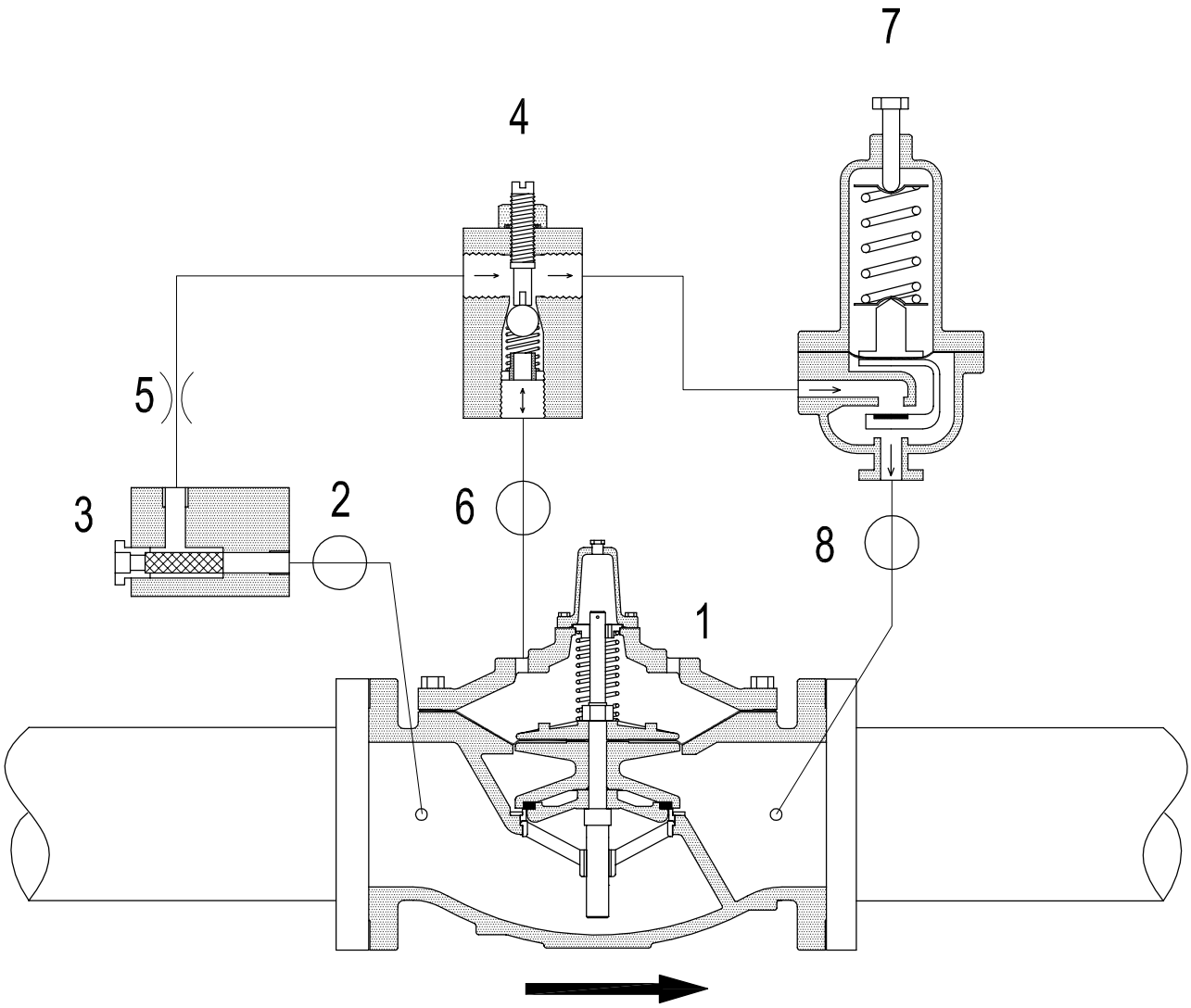

1. Main Valve - Model 106/206-PG.
2. Isolating Valve (standard on 4" and larger).
3. Strainer - J0098A (standard on 4" and larger).
4. Flow Stabilizer - Model 26 - 8" 106/10" 206 and smaller only.
5. Fixed Restriction.
6. Isolating Valve (standard on 4" and larger).
7. Pressure Reducing Pilot - Model 160.
8. Isolating Valve.

Pressure Reducing Valve.

Model 26 removed from 10" 106/12" 206 and larger April 25, 2008.

SINGER VALVE
Result-Based Solutions. Globally.™
www.singervalve.com 12850-87th Avenue. Surrey, B.C. V3W 3H9

Drawn By:	Approved By:
Kari Oksanen	Kari Oksanen
Date:	Drawing:
October 30, 1995	A-0306C

Model 106 or 206-PR