SINGER VALVE
Result-Based Solutions. Globally.™

12850-87th Avenue
Surrey, BC. Canada. V3W 3H9
Ph: 604-594-5404
Fx: 604-594-8845
www.singervalve.com

SINGER MODEL 106/206-PR-C-R

Pressure Reducing, Check and Pressure Sustaining Valve Schematic A-0339D
Installation, Operating and Maintenance Instructions

DESCRIPTION:

Model 106/206-PR-C-R is a pilot operated pressure reducing valve designed to automatically reduce a high inlet pressure into a lower outlet pressure. The valve will maintain a relatively steady downstream pressure regardless of fluctuations in the supply pressure or flow rate.

The valve also controls the inlet pressure to keep it from falling below the setpoint of Pressure Sustaining Pilot (11). If the inlet pressure drops to the setpoint of Pilot (11), Main Valve (1) will start closing in an attempt to keep the inlet pressure from dropping further.

The valve acts as a check valve to prevent reverse flow.

Unless otherwise specified, the valve will be assembled for service temperatures to 180°F (80°C). Higher temperature ratings are available - consult SINGER VALVE for details.

DESCRIPTION OF OPERATION:

Main Valve (1) is normally open when pressure is applied to the valve inlet. When the same pressure is applied to the bonnet, the valve closes tight. Refer to 106/206-PG 'Description of Operation'. By controlling the pressure in the bonnet, Main Valve (1) can be made to open fully, close tight or open partially.

The bonnet pressure (and therefore the position of the Main Valve) is controlled by a pilot circuit consisting of Fixed Restriction (5), Flow Stabilizer (4), if so equipped, Pressure Sustaining Pilot (11) and Pressure Reducing Pilot (7).

When there is no demand (and the downstream pressure is at the setting of Pressure Reducing Pilot [7]), Pilot (7) is closed. Pressure from the inlet side of the Main Valve is directed to the bonnet through Fixed Restriction (5) and Flow Stabilizer (4), if so equipped. The Main Valve closes. When flow is required, Pressure Reducing Pilot (7) senses a drop in it's outlet pressure and opens. Flow through Pilot (7) is greater than flow through Fixed Restriction (5). The bonnet pressure is reduced and the Main Valve opens to supply the demand. Speed of opening is determined by the setting of Flow Stabilizer (4), if so equipped. Refer to Model 26 instructions for details and adjustment.

Under flowing conditions, Pilot (7) reacts to small changes in pressure to modulate the bonnet pressure (and Main Valve position) as required to keep the downstream pressure constant. Note that the Main Valve position follows the position of Pilot (7). When Pilot (7) closes, the Main Valve closes. When Pilot (7) opens, the Main Valve opens.

If the inlet pressure drops to the setting of Pressure Sustaining Pilot (11), Pilot (11) closes and the Main Valve closes. Pilot (11) then modulates the Main Valve to keep the inlet pressure from dropping below the setpoint of Pilot (11).

Note that when Pressure Reducing Pilot (7) is controlling the valve, the inlet pressure is above the setting of Pilot (11) and when Pressure Sustaining Pilot (11) is controlling the valve, the outlet (downstream) pressure is below the setting of Pilot (7).

The valve acts as a check valve to prevent reverse flow because Check Valve (10) admits the higher outlet pressure to the bonnet and Check Valve (9) keeps the higher pressure from escaping from the bonnet under reversed pressure conditions.

INSTALLATION:

1. Refer to 106/206-PG 'Installation'.
2. Installation where there is loosely held piping and/or elbows close to the valve may cause the valve to pulsate.
3. **PRESSURIZE THE VALVE SLOWLY AND BLEED AIR FROM THE BONNET**. See 106/206-PG instructions. Sudden pressurization can damage the valve.

12850-87th Avenue
Surrey, BC. Canada. V3W 3H9
Ph: 604-594-5404
Fx: 604-594-8845
www.singervalve.com

ADJUSTING PROCEDURE:

- Open Isolating Valves (2), (6) if so equipped and (8).
- Crack outlet stop valve and slowly open inlet stop valve wide.
- Bleed air from Main Valve bonnet. SEE 106/206-PG 'INSTALLATION'.
- Open outlet stop valve wide.
- **ADJUSTMENT OF PRESSURE REDUCING PILOT:**
- When Pressure Reducing Pilot (7) is adjusted, there must be some flow through the valve and the inlet pressure must be above the setting of Pressure Sustaining Pilot (11).
- Loosen the locknut on the adjusting screw of Pilot (7) and turn the adjusting screw clockwise for increased downstream pressure and counterclockwise for reduced pressure. Adjust the pressure past the required setpoint and return it to the proper setting to assure that Pressure Reducing Pilot (7) is controlling the Main Valve. Tighten the locknut after the required setting has been obtained.
- If the downstream pressure does not respond to turning of the adjusting screw, Pressure Sustaining Pilot (11) is likely controlling the Main Valve. Reduce flow (demand) or turn the adjusting screw of Pressure Sustaining Pilot (11) counterclockwise to reduce the setting.
- **ADJUSTMENT OF PRESSURE SUSTAINING PILOT:**
- When Pressure Sustaining Pilot (11) is adjusted, there must be some flow through the valve and the downstream pressure must be below the setting of Pressure Reducing Pilot (7). This means a high flow or restricted inlet capacity or both. Increase the flow as much as is reasonable and (if required) partially close a valve on the inlet side of the Main Valve until the downstream pressure drops. When Pressure Reducing Pilot (7) is set high (adjusting screw is turned down), it is easier to make Pressure Sustaining Pilot (11) control the valve.
- Loosen the locknut on the adjusting screw of Pilot (11) and turn the adjusting screw clockwise for higher setting (inlet pressure) and counterclockwise for reduced setting. Adjust the pressure past the required setpoint and return it to the proper setting to assure that Pressure Sustaining Pilot (11) is controlling the Main Valve. Tighten the locknut when required setting has been obtained.
- **IF THE VALVE DOES NOT OPEN** (pressure remains low), check the adjustment of Flow Stabilizer (4), if so equipped**. SEE MODEL 26 INSTRUCTIONS.**
- **IF THE VALVE BEGINS TO OSCILLATE OR HUNT:**
- Bleed air from Main Valve bonnet. **SEE 106/206-PG -'INSTALLATION'**.
- Adjust Flow Stabilizer (4), if so equipped. **SEE MODEL 26 INSTRUCTIONS.**

SERVICE SUGGESTIONS:

In addition to service suggestions listed in the 106/206-PG instruction, we suggest the following:

DOWNSTREAM PRESSURE HIGH and does not respond to adjustment of Pressure Reducing Pilot (7):

Close Isolating Valve (8). If the Main Valve closes, Pressure Reducing Pilot (7) is likely to be faulty. If nothing happens, there is a problem in the pilot piping from the Main Valve inlet to the bonnet i.e. inlet pressure is not getting to the bonnet or the Main Valve is faulty.

UPSTREAM PRESSURE DROPS TOO LOW:

Check **ADJUSTMENT OF PRESSURE SUSTAINING PILOT** above. Make sure that Pilot (11) controls the valve when adjustments are made.

A-0339D

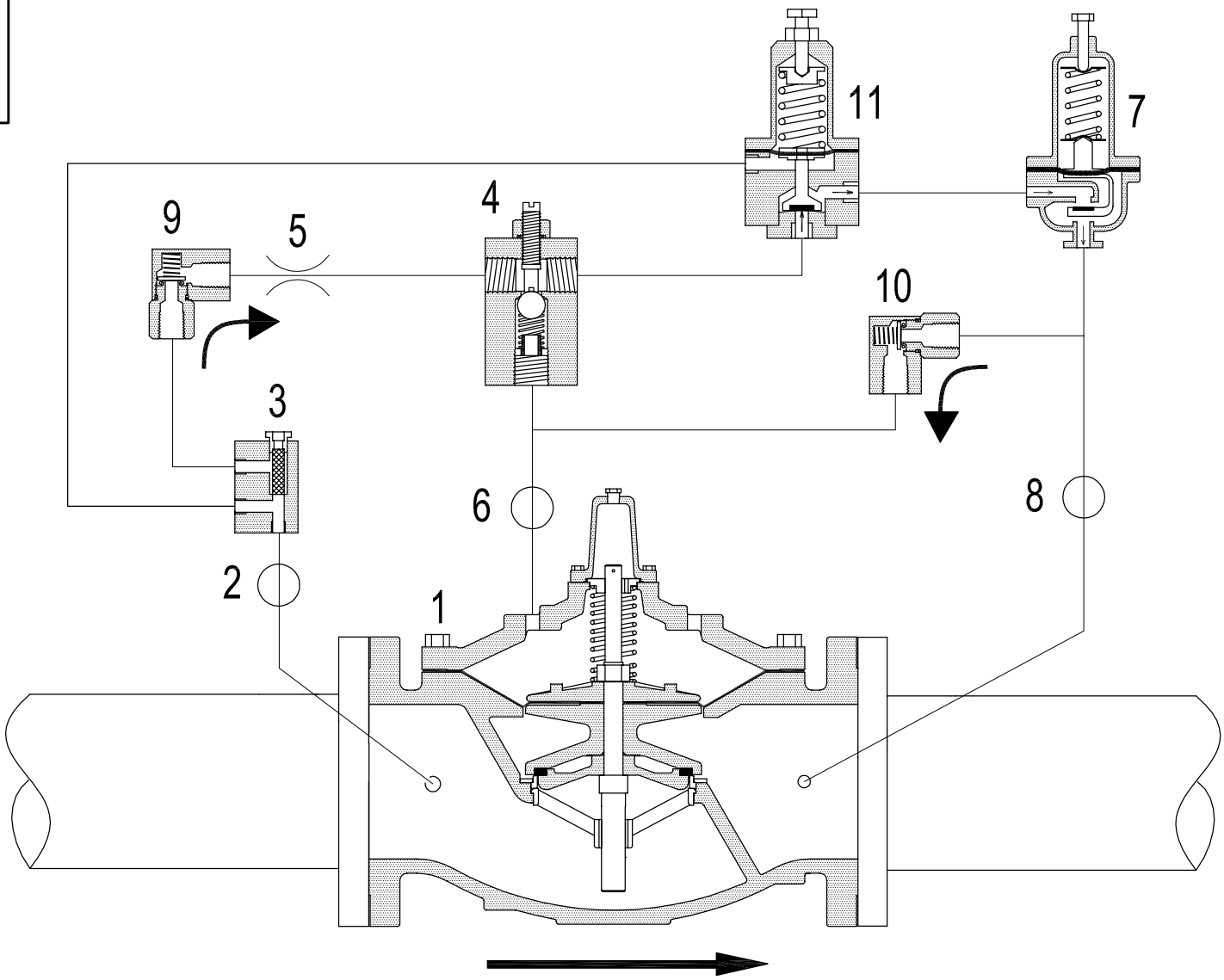

1. Main Valve - Model 106/206-PG.
2. Isolating Valve - 4" and larger only.
3. Strainer - 40 mesh - J0097A - 4" and larger only .
4. Flow Stabilizer - Model 26 - 8" 106/10" 206 and smaller only.
5. Fixed Restriction .
6. Isolating Valve - 4" and larger only .
7. Pressure Reducing Pilot - Model 160.
8. Isolating Valve - standard on all sizes .
9. Check Valve - Model 10 .
10. Check Valve - Model 10.
11. Pressure Sustaining Pilot - Model 81-RP .

Pressure Reducing, Check and
Pressure Sustaining Valve.

Model 26 removed from 10" 106/12" 206 and larger April 25, 2008.

SINGER VALVE
Result-Based Solutions. Globally.™
www.singervalve.com 12850-87th Avenue. Surrey, B.C. V3W 3H9

Drawn By:	Approved By:
Kari Oksanen	Kari Oksanen
Date:	Drawing:
January 11, 1995	A-0339D

Model 106 or 206-PR-C-R