SINGER VALVE
Result-Based Solutions. Globally.™

12850-87th Avenue
Surrey, BC. Canada. V3W 3H9
Ph: 604-594-5404
Fx: 604-594-8845
www.singervalve.com

# MODEL 106/206-PR-S-SC

Pressure Reducing Valve with Downstream Surge Control and Solenoid Override Schematic A-0549B
Installation, Operating and Maintenance Instructions

## DESCRIPTION:

Model 106-PR-S-SC is a pilot operated pressure reducing valve designed to automatically reduce a high inlet pressure into a lower outlet pressure. The valve will maintain a relatively steady downstream pressure regardless of fluctuations in the supply pressure or flow rate.

The downstream surge control increases the closing speed of the valve to help the valve maintain control when the demand is reduced suddenly. The solenoid override keeps the valve closed until it is energized.

Unless otherwise specified, the valve will be assembled for service temperatures to 100°F (40°C). Higher temperature ratings are available - consult SINGER VALVE for details.

## DESCRIPTION OF OPERATION:

Main Valve (1) is normally open when pressure is applied to the valve inlet. When the same pressure is applied to the bonnet, the Main Valve closes tight. Refer to 106/206-PG 'Description of Operation'. By controlling the pressure in the bonnet, the Main Valve can be made to open fully, close tight or open partially.

The bonnet pressure (and therefore the position of the Main Valve) is controlled by a pilot circuit consisting of Fixed Restriction (5), Solenoid Valve (10) and Pressure Reducing Pilot (7).

When there is no demand (and the downstream pressure is at the setting of Pilot [7]), Pilot (7) is closed. Pressure from the inlet side of the Main Valve is directed to the bonnet through Fixed Restriction (5) and Flow Stabilizer (4). Main Valve (1) closes. When flow is required, Pilot (7) senses a drop in pressure and opens. Flow through Pilot (7) is greater than flow through Fixed Restriction (5). Bonnet pressure is reduced and Main Valve (1) opens to supply the demand. Speed of opening is determined by the setting of Flow Stabilizer (4), if so equipped. Refer to Model 26 instructions for details and adjustment.

Under flowing conditions Pilot (7) reacts to small changes in pressure to modulate the bonnet pressure (and valve position) as required to keep the downstream pressure constant. Note that Main Valve position follows the position of Pilot (7). When Pilot (7) closes, the Main Valve closes. When Pilot (7) opens, the Main Valve opens.

Surge Pilot (9) senses the downstream pressure. If the downstream pressure rises above the setting of Pressure Reducing Pilot (7) and reaches the setting of Surge Pilot (9), the Surge Pilot opens and by-passes Fixed Restriction (5) to close the Main Valve rapidly.

## INSTALLATION:

1. Refer to 106/206-PG ”Installation”.
2. Installation where there is loosely held piping and/or elbows close to the valve may cause the valve to pulsate.
3. Check the solenoid voltage and wire as required. The coil has the voltage printed on its side.

## ADJUSTING PROCEDURE:

1. Open Isolating Valves (2), (6) and (8).
2. Crack outlet stop valve and slowly open inlet stop valve wide.
3. Bleed air from Main Valve bonnet. SEE 106/206-PG 'INSTALLATION'.
4. Open outlet stop valve wide. Energize the solenoid.
5. Set reduced (downstream) pressure by turning Pilot (7) adjusting screw:

- To increase pressure, turn adjusting screw clockwise.
- To reduce pressure, turn adjusting screw counterclockwise.
- NOTE THAT THERE MUST BE FLOW THROUGH THE VALVE WHEN PRESSURE IS ADJUSTED AND THE SURGE CONTROL PILOT MUST BE SET HIGHER THAN THE PRESSURE REDUCING PILOT.

6. Turn the adjusting screw of Surge Pilot (9) counterclockwise until the downstream pressure just begins to drop and then turn the adjusting screw clockwise 1/4 turn.
7. IF THE VALVE DOES NOT OPEN (pressure remains low), check the adjustment of Flow Stabilizer (4), if so equipped. SEE MODEL 26 INSTRUCTIONS.
8. IF THE VALVE BEGINS TO OSCILLATE OR HUNT:

- Bleed air from Main Valve bonnet. SEE 106/206-PG 'INSTALLATION'.
- Adjust Flow Stabilizer (4), if so equipped . SEE MODEL 26 INSTRUCTIONS.

## SERVICE SUGGESTIONS:

In addition to service suggestions listed in the 106/206-PG instruction, we suggest the following:

IF THE VALVE FAILS TO CLOSE:

Close Isolating Valve (8). If the Main Valve closes, Pilot (7) and/or Solenoid Valve (10) are defective. If the Main Valve does not close, remove the pilot tubing between Solenoid Valve (10) and Flow Stabilizer (4). If there is no flow from Flow Stabilizer (4), the upstream pilot piping is obstructed. Clean the line and Strainer (3). Close Isolating Valve (2). Remove the copper tube between Strainer (3) and Flow Stabilizer (4). If there is flow from Flow Stabilizer (4), Main Valve diaphragm is ruptured. If there is no flow from the Flow Stabilizer (4), open Isolating Valve (2) slowly. If there is no flow, Strainer (3) is plugged.

A-0549B

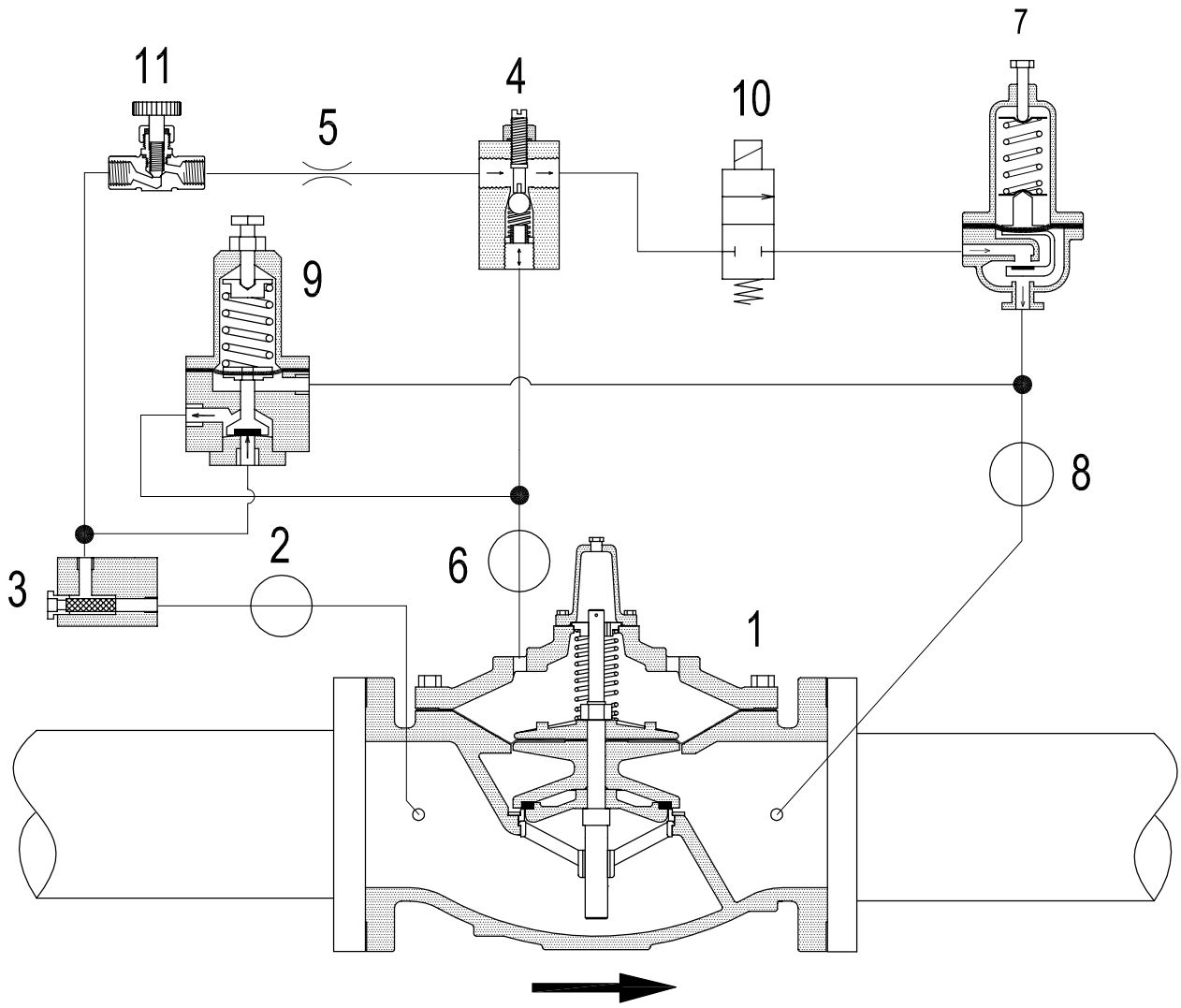


1. Main Valve - Model 106/206-PG.
2. Isolating Valve - 4" and larger only.
3. Strainer - 40 mesh - J0098A.
4. Flow Stabilizer - Model 26 - 8" 106/10" 206 and smaller only.
5. Fixed Restriction.
6. Isolating Valve - 4" and larger only.
7. Pressure Reducing Pilot - Model 160.
8. Isolating Valve.
9. Surge Pilot - Model 81-RP.
10. Solenoid Valve - two way - Normally Closed.
11. Closing Speed Control - Model 852-B.

Rev A. Added closing speed control. 01/15/04.

Pressure Reducing Valve with
Downstream Surge Control
and Solenoid Override Feature

Model 26 removed from 10" 106/12" 206 and larger April 25, 2008.

SINGER VALVE
Result-Based Solutions. Globally.™
www.singervalve.com 12850-87th Avenue. Surrey, B.C. V3W 3H9

| Drawn By: | Approved By: |
|---|---|
| Kari Oksanen | Kari Oksanen |
| Date: | Drawing: |
| February 26, 1996 | A-0549B |

Model 106 or 206-PR-S-SC-NC (or NO)