SINGER VALVE
Result-Based Solutions. Globally.™

12850-87th Avenue
Surrey, BC. Canada. V3W 3H9
Ph: 604-594-5404
Fx: 604-594-8845
www.singervalve.com

SINGER MODEL 106/206-SC

Solenoid Control Valve Schematic A-0593C
Installation, Operating and Maintenance Instructions

DESCRIPTION:

Model 106/206-SC is a globe or angle pattern valve designed for two position (open or closed) operation.

The position of Main Valve (1) is selected electrically by energizing or de-energizing Solenoid Valve (5). These valves are available as Normally Closed (NC) models, which close when the solenoid is de-energized or as Normally Open (NO) models, which open when the solenoid is de-energized.

DESCRIPTION OF OPERATION:

Main Valve (1) closes when the inlet pressure is directed to the bonnet and opens when the bonnet is vented to downstream. Refer to 106/206-PG "Description of Operation". Solenoid Valve (5) connects the bonnet to upstream or downstream, as required.

Opening Speed Control (6) limits the rate of flow from the bonnet to downstream. Closing Speed Control (4) limits the rate of flow from the upstream to the bonnet. Note that Speed Controls (5) and (6) are optional on 3" and smaller valves and standard on 4" and larger. If the valve is not equipped with Speed Controls, the rate of opening and closing is fixed and cannot be adjusted.

All valves include Strainer (3). Isolating Valves (2A), (2B) and (2C) are optional on 3" and smaller valves. They are standard on 4" and larger.

INSTALLATION:

1. Refer to 106/206-PG "Installation".
2. Check solenoid name plate for correct pressure. Check voltage at the side of the coil (not the name plate).
3. Connect a suitable power source to the solenoid. Refer to solenoid valve instructions. **Never energize an A.C. coil when the coil is removed from the solenoid valve; the coil will be destroyed in a matter of seconds.**

ADJUSTING PROCEDURE:

If your valve is equipped with Speed Controls you can adjust the opening or closing speed. Turn appropriate Speed Control clockwise for reduced speed; counterclockwise for increased speed. DO NOT fully close either of the speed controls, or the valve will not operate.

SERVICE SUGGESTIONS:

1. See service suggestions for 106/206-PG and solenoid pilot.
2. To reduce pressure drop on small flows, the exhaust of the solenoid can be piped to drain rather than downstream. The valve will exhaust a small amount of water every time it opens.
3. **NEVER ENERGIZE AN AC SOLENOID COIL WHEN THE COIL IS REMOVED FROM THE SOLENOID PILOT.**

A-0593C

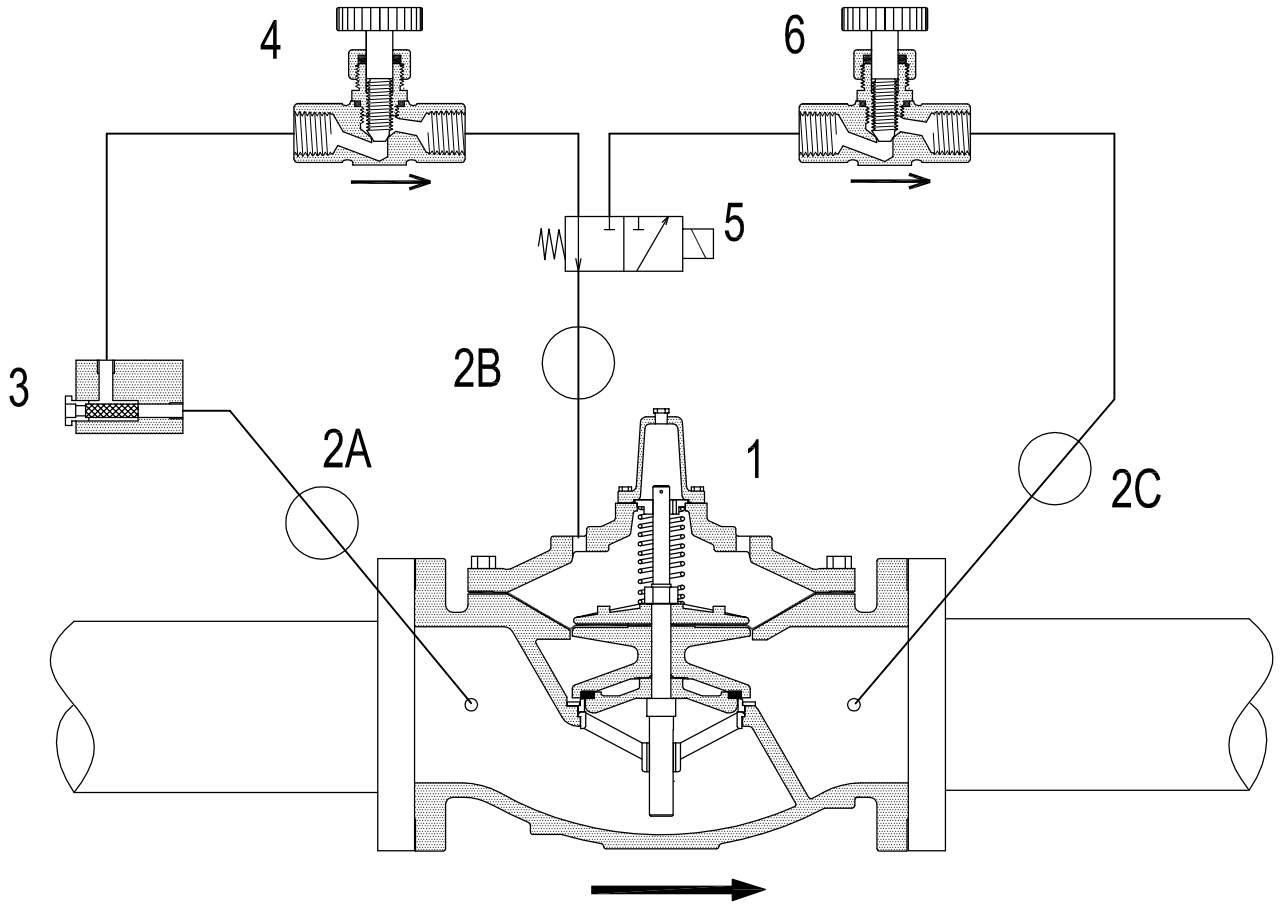

1. Main Valve - Model 106/206-PG.
2. Isolating Valves. Optional 1/2"-3". Standard 4" & up.
3. Strainer - 40 mesh - J0098A.
4. Closing Speed Control - Model 852-B. Optional 1/2"-3". Standard 4" & up.
5. Solenoid Valve.
6. Opening Speed Control - Model 852-B. Optional 1/2"-3". Standard 4" & up.

Solenoid Valve (SC-NC Shown).

Rev C: All ball valves, closing speed control, opening speed control made optional 3" and smaller. 101603.

Model 106 or 206-SC-NC, Main Valve Normally Closed when solenoid pilot is de-energized

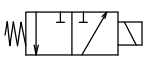

energize Solenoid Pilot to open Main Valve.

Model 106 or 206-SC-NO, Main Valve Normally Open when Solenoid Pilot is de-enegized

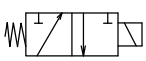

energize Solenoid Pilot to close Main Valve.

SINGER VALVE
Result-Based Solutions. Globally.™
www.singervalve.com 12850-87th Avenue. Surrey, B.C. V3W 3H9

Drawn By:	Approved By:
Kari Oksanen	Kari Oksanen
Date:	Drawing:
November 8, 2001	A-0593C

Model 106 or 206-SC-NC (or NO)