A0659A

CHECK VALVE - 1/4" NPT

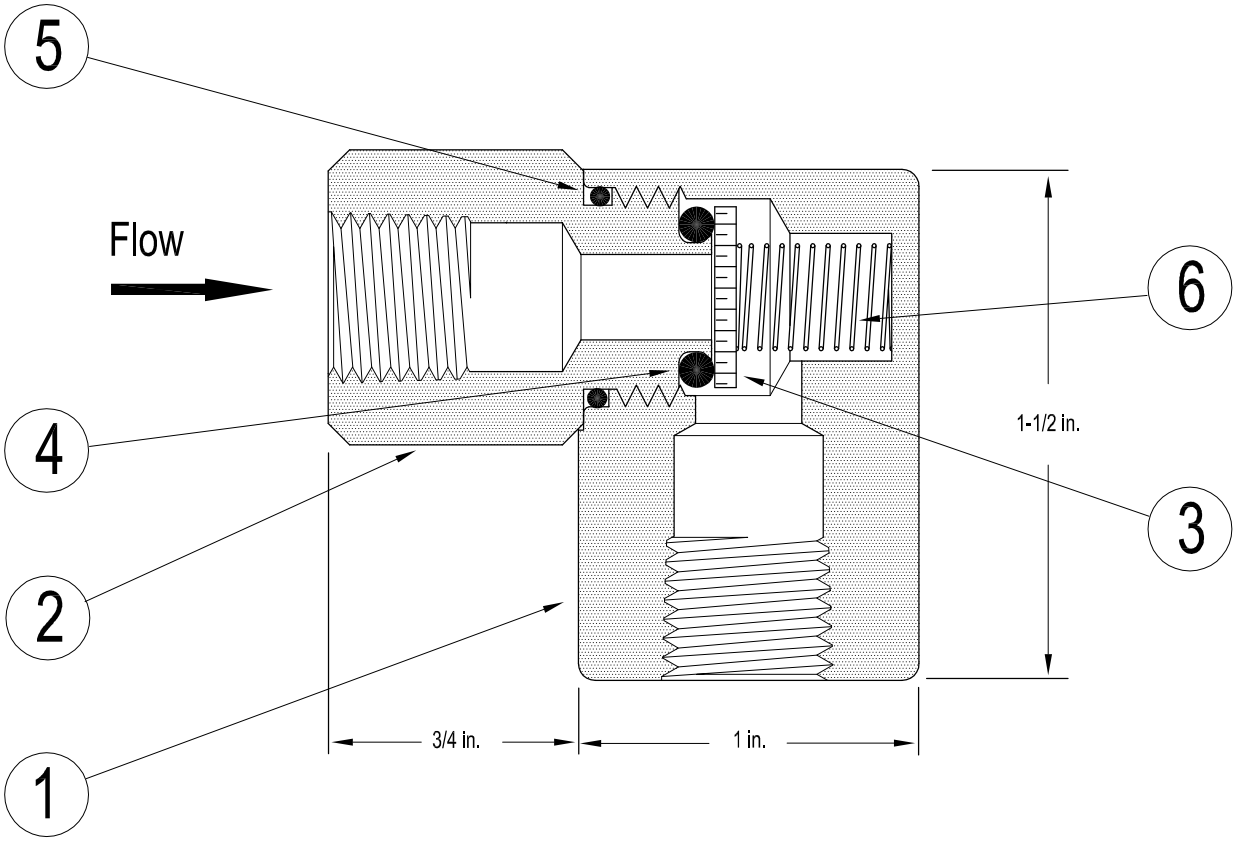

ITEM	DESCRIPTION	MATERIAL
1	BODY	BRASS
2	SEAT RING	BRASS
3	INNER VALVE	LEXAN
4	SEAT SEAL	BUNA–N
5	BODY SEAL	BUNA–N
6	SPRING	MODEL 10 – SST MODEL 12 – PHOSPHOR BRONZE (MODEL 12 HAS STIFFER SPRING)

SINGER VALVE
Result-Based Solutions. Globally.™
www.singervalve.com 12850-87th Avenue. Surrey, B.C. V3W 3H9

Drawn By:	Approved By:
Scott Grover	Kari Oksanen
Date: November 16, 2005	Drawing: A0659A

Model 10 & 12