SINGER VALVE
Result-Based Solutions. Globally.™

12850-87th Avenue
Surrey, BC. Canada. V3W 3H9
Ph: 604-594-5404
Fx: 604-594-8845
www.singervalve.com

SINGER MODEL 106-RD

Differential Relief Pilot Schematic A0556B
Installation, Operation and Maintenance Instructions

DESCRIPTION:
Model 106-RD is designed to allow flow when the inlet pressure exceeds the outlet pressure by a predetermined amount. The valve is used as a differential control valve on Singer Model 106-A-IV.

DESCRIPTION OF OPERATION:
Top of the diaphragm is externally connected to the outlet of the valve. When inlet and outlet pressures are equal, the spring force keeps the valve closed. When outlet pressure drops a predetermined amount below the inlet pressure, the inlet pressure under the diaphragm is sufficient to overcome the combined forces at the spring and the outlet pressure acting on top of the diaphragm. The valve opens.

ADJUSTING PROCEDURE:
1. To increase differential setting turn adjusting screw clockwise.
2. To decrease differential setting, turn adjusting screw counterclockwise.

NOTE: Release locknut before adjusting and tighten locknut after adjusting.

DISMANTLING:
1. Close shut-off cock in sensing line.
2. Loosen locknut and remove adjusting screw.
3. Disconnect piping from spring casing.
4. Remove casing capscrews.
5. Remove spring casing, spring step, spring, spring buffer and diaphragm.

INSPECTION:
1. Clean all parts with water and clean with a lint free cloth.
2. Inspect all parts for scale and damage.

REASSEMBLY:
1. Reassembly is the reverse if dismantling.
2. Ensure that all parts are installed as shown in enclosed drawing.

A0556B

Differential Relief Pilot

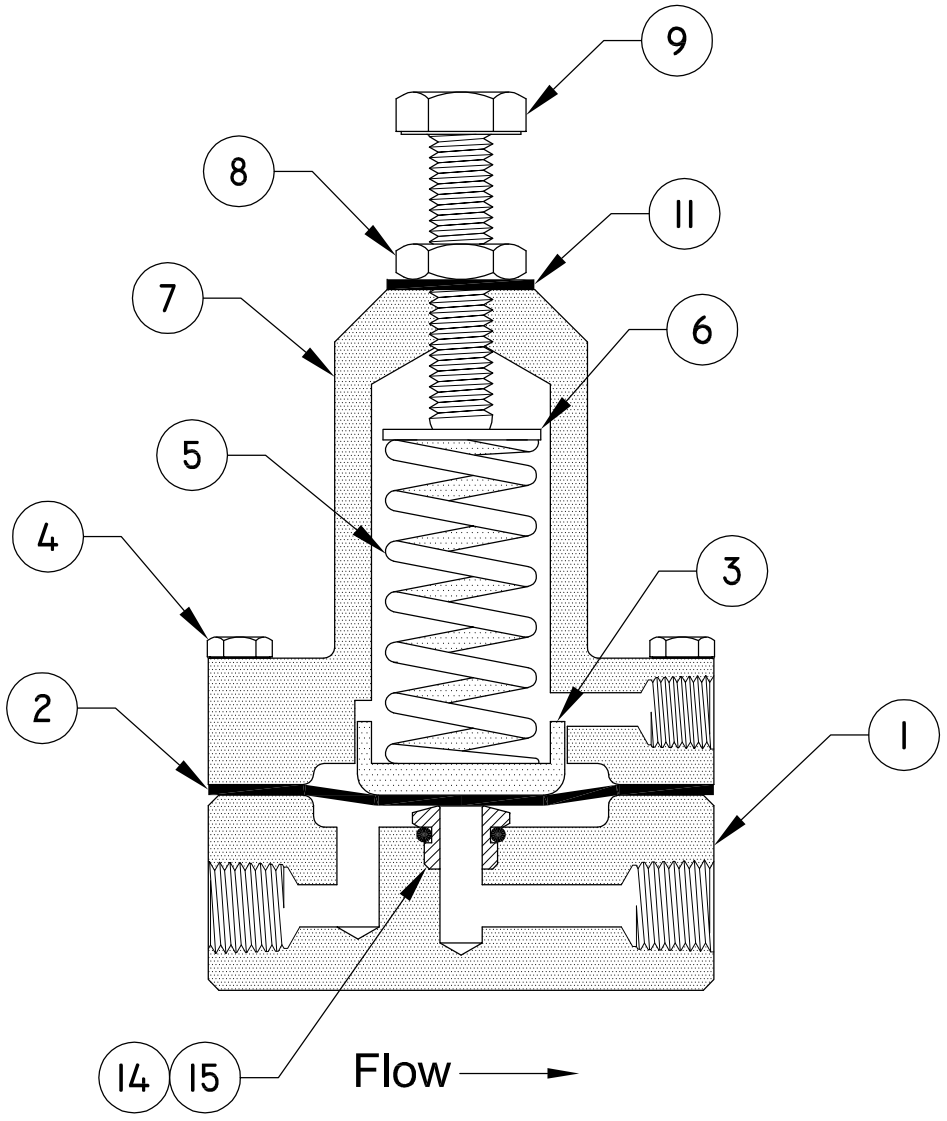

Item	Part Name	Material
1	Body	Brass
2	Diaphragm	Neoprene
3	Spring Buffer	Brass
4	Casing Capscrews	Stainless Steel
5	Spring	Stainless Steel
6	Spring Step	Brass
7	Spring Casing	Brass
8	Locknut	Stainless Steel
9	Adjusting Screw	Stainless Steel
11	Thread Seal	Steel & Resilient
14	Seat Ring	Stainless Steel
15	Seat Ring Seal	Buna-N

SINGER VALVE
Result-Based Solutions. Globally.
www.singervalve.com 12850-87th Avenue. Surrey, B.C. V3W 3H9

Drawn By:	Approved By:
Stephen Bishop	Kari Oksanen
Date: November 1, 2001	Drawing: A0556B

Model 106-RD