SINGER VALVE
Result-Based Solutions. Globally.™

12850-87th Avenue
Surrey, BC. Canada. V3W 3H9
Ph: 604-594-5404
Fx: 604-594-8845
www.singervalve.com

SINGER MODEL 39

Differential (On-Off) Float Pilot Schematic A0411A
Installation, Operating and Maintenance Manual

DESCRIPTION:

Singer Model 39 is a three-way, non-modulating float pilot designed to operate an on-off float valve. Level differential (level where valve opens to level where the valve closes) is adjustable.

DESCRIPTION OF OPERATION:

Refer to Drawing A0411.

Body (1) has three ports marked "IN", "B" and "X". Depending on the position of inner valve (4) port "B" is connected to either port "IN" or port "X". Pressure in ports "IN" and "B" will not move the inner valve because the inner valve is fully balanced spool design.

Float (16) is free to move along float rod (14) between adjustable stops (25). The linkage assembly is weight balanced by counterweight (15) and pressure balanced as noted above.

When the level rises, float (16) hits the upper adjustable stop (25) and lifts the float rod (14) up. Inner valve (4) is pushed up and port "IN" is connected to port "B". Port "X" is closed. The bonnet of the main valve (106) is pressurized and the valve closes. Refer to description "106-F-V" and "106-PG".

Level differential is adjusted by adjusting stops (25).

INSTALLATION:

1. Install the pilot into tank or reservoir close to desired level. Be careful not to damage the pilot.
2. Waves and turbulence may hinder operation or damage float rod; it may be necessary to construct a protective cage or install the pilot where turbulence is minimal.
3. Make sure the pilot is installed vertically.
4. Check that lever arm (9) and counterweight lever arm (8) are parallel. Float rod should move freely up and down and remain vertical through its travel.
5. Adjust the counterweight (15) to balance the assembly when float is held off the stops or removed. The linkage should hold any given position when not moved by the float. The pilot will not operate unless it is properly balanced.
6. Connect pilot to main valve as shown on schematic. Port "IN" is connected to main valve inlet (upstream), port "B" is connected to the bonnet of main valve. Port "X" is exhaust to tank or reservoir. Use at least 1/4" pipe, preferably copper.

ADJUSTMENT PROCEDURE:

Adjust upper and lower adjustable stops (25) at desired open and close positions.

SUGGESTIONS:

If the pilot does not operate properly, check the following:

1. Check all points under "Installation".
2. Remove float (16). Check that float rod moves freely and is properly balanced.
3. Remove body (1) and inner valve (4). Check for dirt, scale and damage. Pay particular attention to "O" Rings.

A0411A

Differential (On-Off) Float Pilot

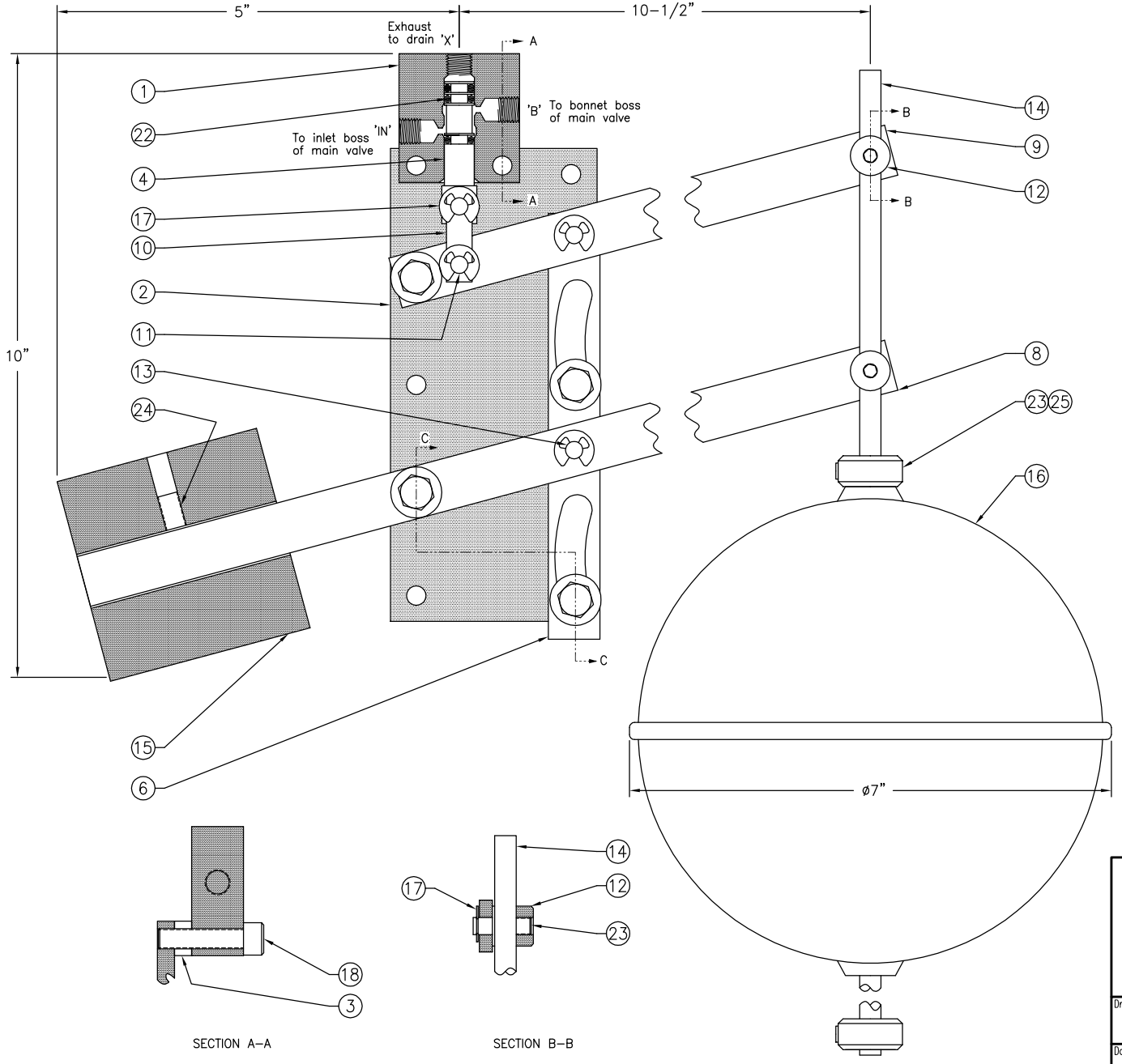

ITEM	PART NAME	STANDARD MATERIAL
1	Body	Brass
2	Mounting bracket	Brass
3	Spacer washer (2)	Brass
4	Inner valve	Brass
5	Guide bar bushing (2)	Stainless steel
6	Guide bar	Brass
7	Lever arm bushing (2)	Stainless steel
8	Counterweight lever arm	Brass
9	Level arm	Brass
10	Connector bar (2)	Brass
11	Retaining pin (2)	Brass
12	Clamp (2)	Brass
13	Guide bar pin (2)	Brass
14	Float rod	Brass
15	Counterweight	Cast iron
16	Float	Copper (soldered)
17	Retaining pins (10)	Stainless steel
18	Body capscews (2)	Stainless steel
19	Guide bar capscrews (2)	Stainless steel
20	Lever arm capscrews (2)	Stainless steel
21	Washer (4)	Stainless steel
22	Inner valve o-rings (3)	Buna-N
23	Clamp set screw (4)	Stainless steel
24	Balance weight screw	Stainless steel
25	Adjustable stop (2)	Brass

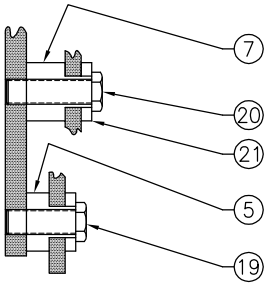

SECTION C-C

SECTION A-A

SECTION B-B

SINGER VALVE
Result-Based Solutions. Globally.™

www.singervalve.com 12850-87th Avenue. Surrey, B.C. V3W 3H9

Drawn By:	Approved By:
Scott Grover	Kari Oksanen
Date: November 18, 2005	Drawing: A0411A

Model 39