SINGER VALVE
Result-Based Solutions. Globally.™

12850-87th Avenue
Surrey, BC. Canada. V3W 3H9
Ph: 604-594-5404
Fx: 604-594-8845
www.singervalve.com

SINGER MODEL 625-RP(D)

Normally Closed (Differential) Pilot Schematic A0312C
Installation, Operating and Maintenance Instructions

DESCRIPTION:

Singer Model 625-RP(D) is a normally closed pilot that opens when the pressure below the diaphragm exceeds the pressure above the diaphragm by an amount determined by the spring setting. In some applications, pressure above the diaphragm is atmospheric. The pilot then opens when the pressure below the diaphragm exceeds the spring setting.

Note that the spring closes the pilot and pressure below the diaphragm (or pressure difference) opens the pilot.

INSTALLATION:

- Flush system of all foreign material before installing the pilot.
- The pilot can be installed in any position.
- Check direction of flow and install the pilot accordingly.
- Connect the pilot and sensing connections as shown on the applicable schematic.

ADJUSTING PROCEDURE:

If the valve is to be used for differential control, there is a **thread seal** below the locknut on the adjusting screw. To avoid damage to the thread seal, loosen the locknut and turn it up several turns and then loosen the thread seal by turning it up [counterclockwise]. After adjustment has been completed, turn the thread seal clockwise and then tighten the locknut.

Turn adjusting screw clockwise for increased setting, counterclockwise for reduced setting.

SERVICE SUGGESTIONS:

TROUBLE	POSSIBLE CAUSE	REMEDY
Fails to open.	Spring overset.	Decrease setting.
	Foreign material in the pilot.	Dismantle and clean.
	Diaphragm ruptured.	Replace.
Fails to close.	Spring underset.	Increase setting.
	Foreign material in the pilot.	Dismantle and clean.
	Worn seat or inner valve.	Replace.
	Worn inner valve seal.	Replace.

A0312C

Normally Closed Pilot

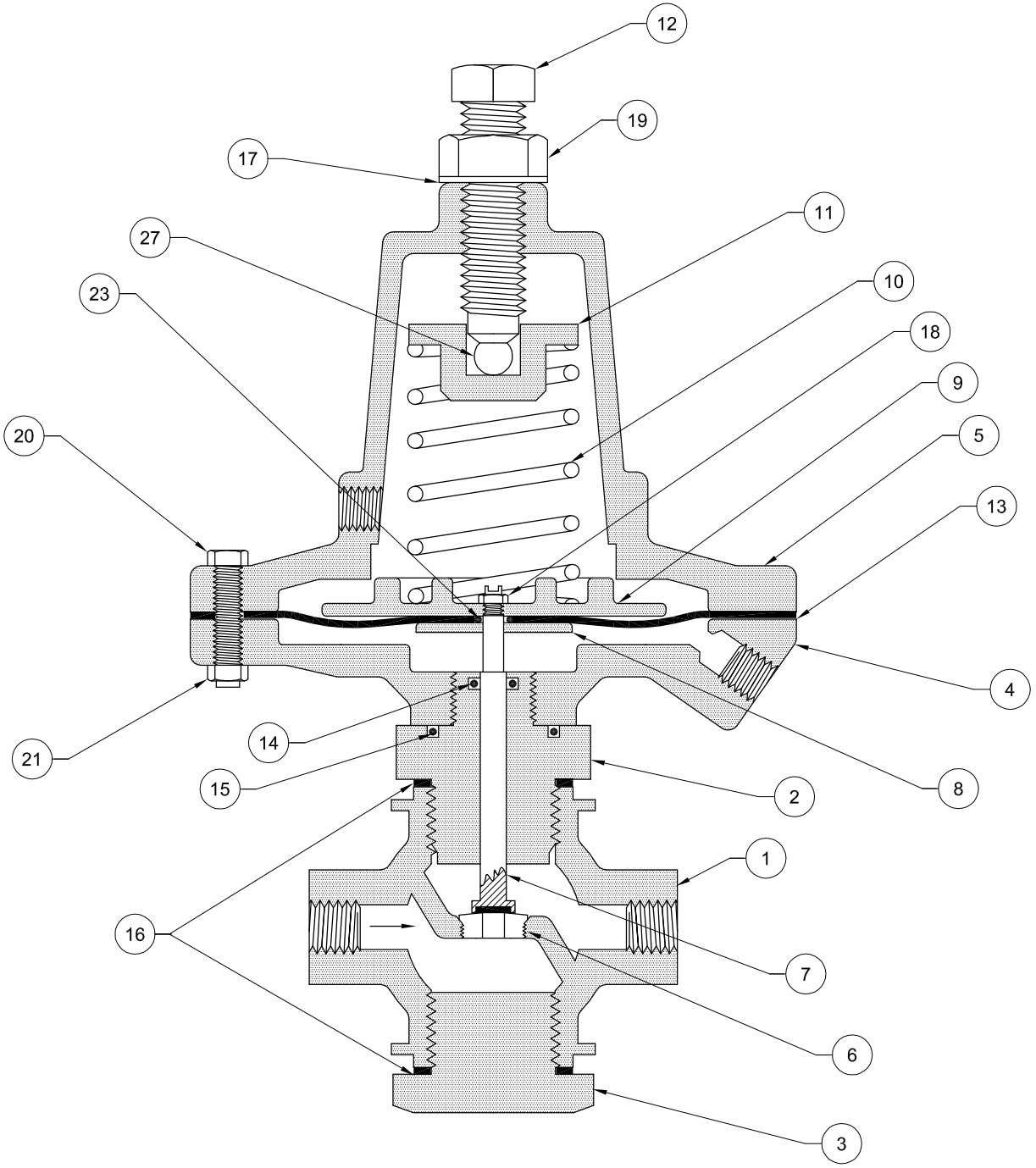

ITEM	PART	MATERIAL
1	Body	Bronze
2	Bonnet	Brass
3	Bottom Cap	Brass
4	Diaphragm Flange	Ductile Iron
5	Spring Casing	Ductile Iron
6	Seat Ring	Stainless Steel
7	Inner Valve	Stainless Steel
8	Lower Clamp Plate	Brass
9	Upper Clamp Plate	Brass
10	Adjusting Spring	Stainless Steel
11	Spring Step	Brass
12	Adjusting Screw	Stainless Steel
* 13	Diaphragm	EPDM
* 14	Inner Valve Seal	Buna-N
* 15	Flange Seal	Buna-N
* 16	Body Gasket (2)	Durabla
* 17	Thread Seal	Steel & Buna-N
18	Plate Nut	Stainless Steel
19	Lock Nut	Stainless Steel
20	Casing Capscrew	Stainless Steel
21	Casing Nuts	Stainless Steel
* 23	Diaphragm Seal	Buna-N
27	Adjusting Screw Bearing	Stainless Steel

* Recommended Spare Parts - Included in KIT 625-PR-100.

SINGER VALVE
Result-Based Solutions. Globally.™
www.singervalve.com 12850-87th Avenue. Surrey, B.C. V3W 3H9

Drawn By:	Approved By:
Kari Oksanen	Kari Oksanen
Date:	Drawing:
November 18, 2005	A0312C

Model 625-RP(D)