SINGER VALVE
Result-Based Solutions. Globally.

12850-87th Avenue
Surrey, BC. Canada. V3W 3H9
Ph: 604-594-5404
Fx: 604-594-8845
www.singervalve.com

SINGER MODEL 81-RP

Pressure Relief Pilot Drawing A0661C
Installation, Operation and Maintenance Instructions

DESCRIPTION:

Model 81-RP is a normally closed pilot that opens when the control pressure below the diaphragm exceeds the force of the spring.

INSTALLATION:

1. Flush system of all foreign matter before installing the valve.
2. The valve can be installed in any position.
3. Check direction of flow and install the valve accordingly. Refer to enclosed schematic and check the arrow in the valve body.
4. Connect control tubing from the sensing connection of the valve to the point of control. Refer to enclosed schematic.

ADJUSTING PROCEDURE:

1. Loosen the locknut.
2. Turn the adjusting screw clockwise for increased setting, counterclockwise for reduced setting.
3. Lock adjustment by tightening adjusting screw locknut.

DISASSEMBLY:

1. Turn Adjusting Screw (8) counterclockwise until Spring (7) is free.
2. Remove Body Capscrews (10).
3. Remove Seat Ring (3).
4. Resilient part of Inner Valve can be inspected once the Seat Ring has been removed.
5. To remove Inner Valve (4), use a ¾" socket (not impact socket) to prevent the Inner Valve from turning when removing Inner Valve Nut (13).

SERVICE SUGGESTIONS:

FAILS TO OPEN

1. Spring overset.
2. Foreign material in valve.
3. Diaphragm ruptured.

FAILS TO CLOSE

1. Spring underset.
2. Foreign material in valve.

A0661C

PRESSURE RELIEF PILOT

(FOR HIGH PRESSURE APPLICATIONS
SEE DRAWING A0781A MODEL 83RP)

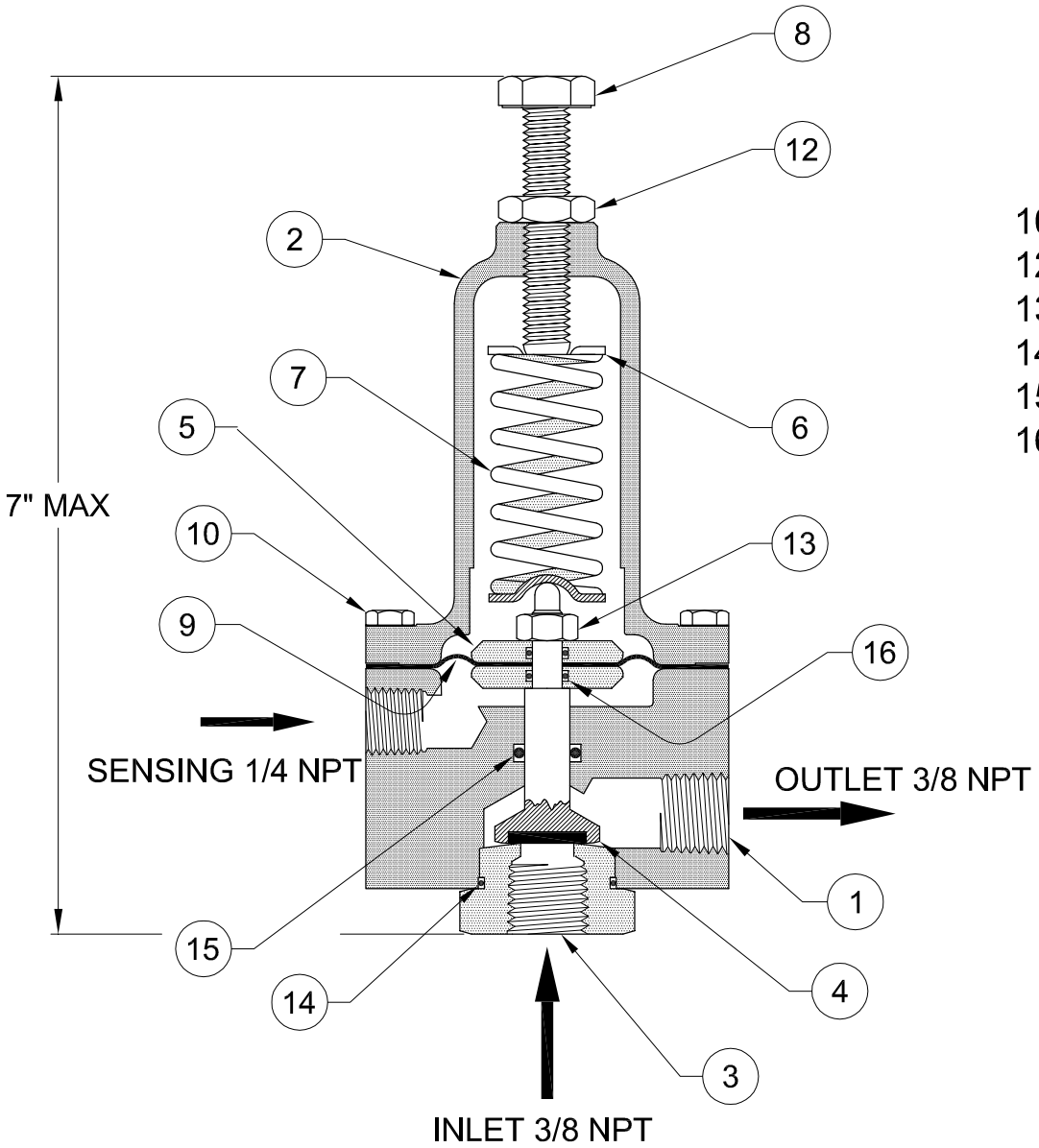

Item	Description	Material
1.	Body	Brass B-16
2.	Spring Casing	Bronze
3.	Seat Ring	Stainless Steel
4.	Inner Valve	Stainless Steel & Buna-N
5.	Clamp Plate	Brass B-16
6.	Spring Step	Stainless Steel
7.	Spring	Spring Steel
8.	Adjusting Screw	Stainless Steel
9.	Diaphragm	Buna-N
10.	Body Capscrew	Stainless Steel
12.	Locknut	Stainless Steel
13.	Inner Valve Nut	Stainless Steel
14.	Seat Ring Seal	Buna-N
15.	Body Seal	Buna-N
16.	Clamp Plate Seal	Buna-N

Spring Ranges:	Adjustment (psi/turn):
5 - 50 psi	8 psi
10 - 80 psi	10 psi
20 - 200 psi	25 psi
100 - 300 psi	40 psi

Rev: September 2002

SINGER VALVE
Result-Based Solutions. Globally.™

www.singervalve.com 12850-87th Avenue. Surrey, B.C. V3W 3H9

Drawn By:	Approved By:
Steve Bishop	Kari Oksanen
Date: March 10, 1999	Drawing: A0661C

Model 81-RP