SINGER VALVE
Result-Based Solutions. Globally.

12850-87th Avenue
Surrey, BC. Canada. V3W 3H9
Ph: 604-594-5404
Fx: 604-594-8845
www.singervalve.com

SINGER MODEL J1521

Arion Strainer

The ARION strainer comes complete with 18-8 stainless steel screen, glass particulate collection bowl, blowdown valve and discharge tube. For high pressure applications, the metal collection bowl is required.

OPERATION:

The water flows in the direction of the arrows through the housing (1). This same flow passes through the stainless steel filter screens (3) from the inside towards the outside. All suspended particles are trapped against the inside of the double mesh screens.

When there is no flow, the particulates fall down into the collection bowl (9). The double port construction of the housing-to-bowl connection prevents the particles from re-entering circulation once flow begins again.

From time to time, dirt can be removed from the collection bowl, by opening the drain valve (7) and venting through the discharge tube (14). The filter is designed so that the dirt particles flow outside without causing abrasion or damage to the filter itself.

Specifications:	Body, Cap, Nut, and Plugs:	Brass
	Screen:	Stainless Steel 18-8
	Bowl:	Glass Trogamid-T Standard; Optional Metal Brass
	Drain Valve:	Brass
	Packing:	PTFE
	Seals:	Buna-N

Rating: J1521G with standard glass bowl, maximum 175 psi (2 bars)
J1521M with optional metal bowl, maximum 365 psi (25 bar)

Installation: Filter MUST be installed in the vertical position

Maintenance: Flush out the collection bowl as frequently as required.
Occasionally clean the glass.
Be CAREFUL NOT to cut or scratch the glass.
Replacement screens are available.

Dimensions:	R:	Body connections	½” NPT	(13mm)
		Drain Valve and tube	3/8” NPT	(10mm)
	L:	Laying length	4”	(105mm)
	A:	Overall height	12.2”	(310mm)
	B:	Centerline to bottom	5.7”	(145mm)
	C:	Centerline to bottom	4.5”	(115mm)
	D:	Width	2.5”	(64mm)

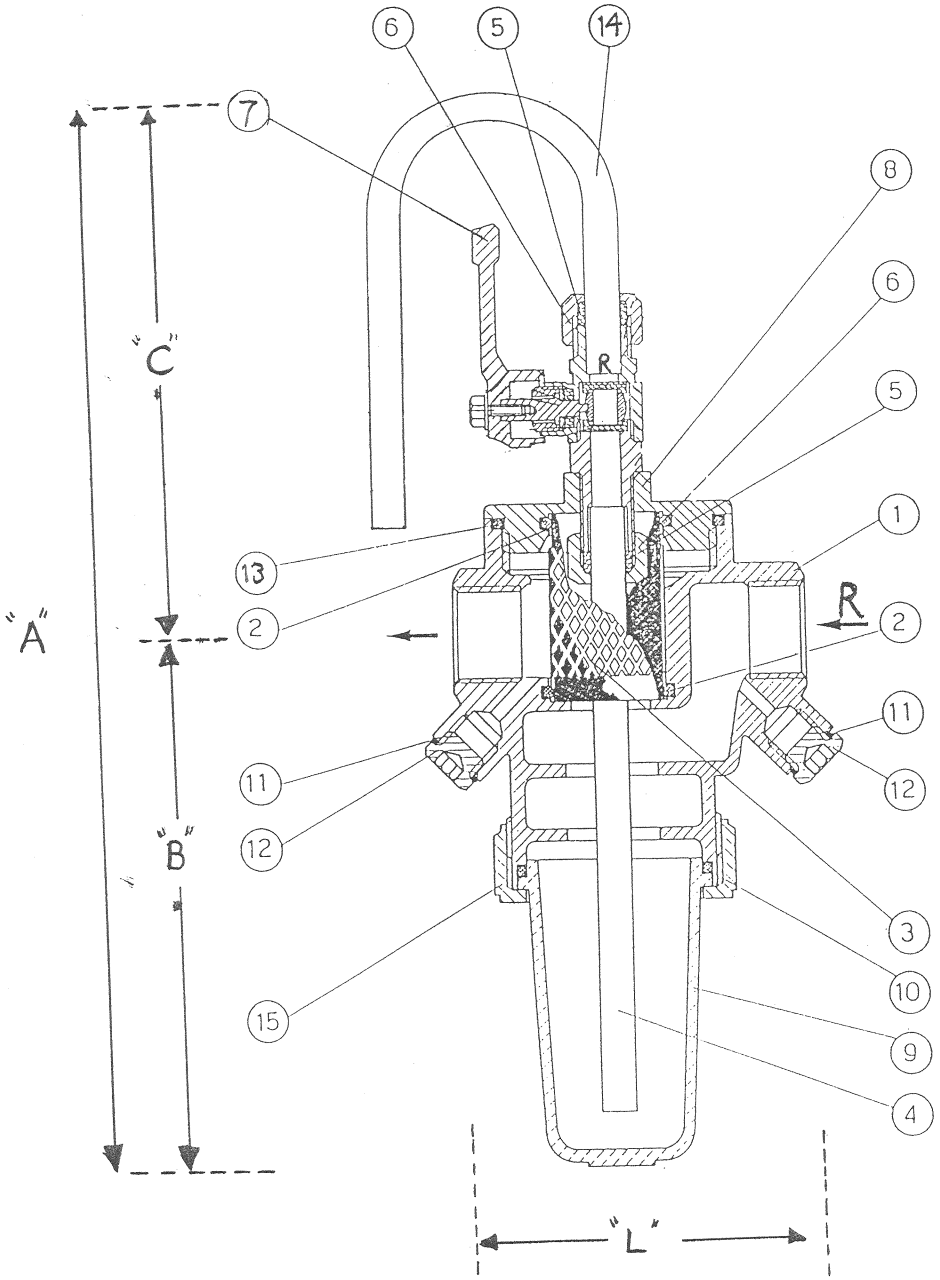

SINGER MODEL J1521
ARION FILTER PARTS LIST

ITEM NO :	*DESCRIPTION :*	*MATERIAL :*
1	BODY HOUSING	BRASS
2	SCREEN SEALS (2)	BUNA
3	SCREEN	18-8 Stainless Steel
4	SUCTION TUBE	COPPER
5	PACKING	PTFE
6	DISCH'G TUBE NUT	BRASS
7	DRAIN VALVE	BRASS
8	CAP	BRASS
9	BOWL	TROGAMID-T
10	BOWL SEAL	BUNA
11	PLUG SEAL (2)	BUNA
12	PORT PLUG (2)	BRASS
13	CAP SEAL	BUNA
14	DISCH'G TUBE	COPPER
15	BOWL NUT	BRASS