socomec
Innovative Power Solutions

Switchgear selection for a Switchboard incomer

PCS 03 Specification Seminar



CRITICAL POWER
POWER CONTROL & SAFETY
SOLAR POWER
ENERGY EFFICIENCY

THE GLOBAL COMPACT
WE SUPPORT

ENERGY SPECIALIST
SINCE 1922

Wilson ONG



Mr Wilson Ong graduated from the National University of Singapore with Honours Degree in Bachelor of Electrical Engineering.

He also completed Graduate Diploma in Marketing Management from Singapore Institute of Management.

Wilson is currently the regional Specification Manager for Socomec Asia Pacific focus on Power Control and Safety and Energy Efficiency solutions.

He was also a member of the SPRING technical committee of CP5 (Electrical Installations) and SS555 (Protection Against Lightning).

He has conducted numerous presentations to consultants, facilities managers and owners on Automatic Transfer Switching Equipment, Load Break Switch and Energy Efficiency standards and applications.

He has been working in the electrical industries for 23 years and he started his career in one of biggest consultancy company. His experience includes project management and consultancy specialises in Healthcare and Institutions.

Wilson also spent almost 18 years with a MNC listed in CAC 40 Paris, Over the years, he has gained strong sales and product marketing experience from medium voltage to extra low voltage, channel sales management, business development for multi market segments and he specialises in Hotel segment. In addition, his supply chain experience further complements his colourful career.

All rights reserved © Socomec 2012

Glossary

- CB: Circuit Breaker
- LBS: Load Break Switch
- O/L: Overload
- S/C: Short circuit
- PnB: Panel Builder
- Tfo: Transformer

All rights reserved © Socomec 2012



Contents of the seminar

Part 1: Background on Switches

Part 2: The three questions

Part 3: Some Other solutions

Part 4: Cost Comparison

Part 5: LBS Applications

All rights reserved © Socomec 2012

socomec
Innovative Power Solutions

Background on switches

IEC60947 - Low voltage switchgear and controlgear

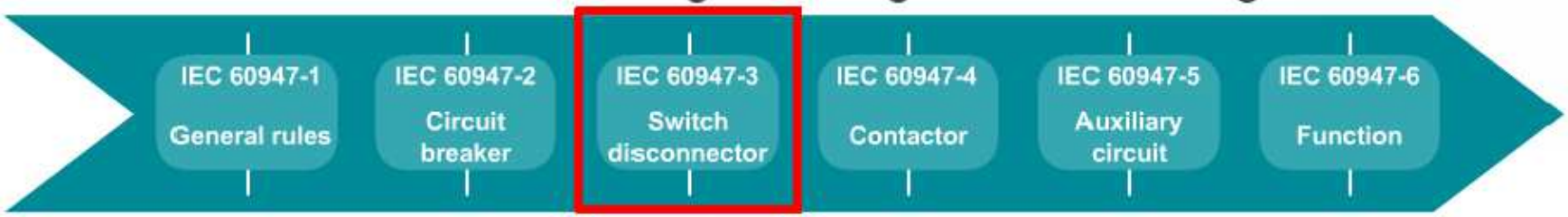

Functions		
Making and breaking current	**Isolating**	**Making, breaking and isolating**
Switch 2.1	Disconnector 2.2	Switch-disconnector 2.3







Background on switches

- Switches are defined by :
  - Their rating & voltage **(1000A, 400V)**
  - Their utilization category **(AC 20, 21, 22 23)**
  - Their short circuit rating **(Icw, Icm)**



- The choice being made depending on
  - Product usage under normal operation
  - Type of load it needs to switch/isolate
  - Where it is installed in the installation



Technical Data - LBS

125 to 800 A

Thermal current I_{th} at 40°C		125 A	160 A	200 A	250 A	315 A	400 A	500 A	630 A	800 A
Rated insulation voltage U_i (V)		800	800	800	800	1000	1000	1000	1000	1000
Rated impulse withstand voltage U_{imp} (kV)		8	8	8	8	12	12	12	12	12
Rated operational currents I_e (A)										
Rated voltage	Utilisation category	A/B[1]	A/B[1]	A/B[1]	A/B[1]	A/B[1]	A/B[1]	A/B[1]	A/B[1]	A/B[1]
415 VAC	AC-20 A / AC-20 B	125/125	160/160	200/200	250/250	315/315	400/400	500/500	630/630	800/800
415 VAC	AC-21 A / AC-21 B	125/125	160/160	200/200	250/250	315/315	400/400	500/500	630/630	800/800
415 VAC	AC-22 A / AC-22 B	125/125	160/160	200/200	250/250	315/315	400/400	500/500	630/630	800/800
415 VAC	AC-23 A / AC-23 B	125/125	160/160	200/200	250/250	315/315	400/400	500/500	500/500	800/800
220 VDC	DC-20 A / DC-20 B	125/125	160/160	200/200	250/250	315/315	400/400	500/500	630/630	800/800
220 VDC	DC-21 A / DC-21 B	125/125	160/160	160/200	250/250	315/315	400/400	500/500	630/630	800/800
220 VDC	DC-22 A / DC-22 B	125/125	160/160	160/200	250/250	315/315	400/400	400/500	500/500	800/800
220 VDC	DC-23 A / DC-23 B	125/125	125/125	160/160	200/200	315/315	400/400	400/400	500/500	800/800
440 VDC	DC-20 A / DC-20 B	125/125	160/160	200/200	250/250	315/315	400/400	500/500	630/630	800/800
440 VDC	DC-21 A / DC-21 B	125[R]/125[R]	160[R]/160[R]	160[R]/200[R]	200[R]/200[R]	315[R]/315[R]	400[R]/400[R]	400[R]/400[R]	500[R]/500[R]	800[R]/800[R]
440 VDC	DC-22 A / DC-22 B	125[R]/125[R]	125[R]/125[R]	160[R]/160[R]	200[R]/200[R]	315[R]/315[R]	400[R]/400[R]	400[R]/400[R]	500[R]/500[R]	800[R]/800[R]
440 VDC	DC-23 A / DC-23 B	125[R]/125[R]	125[R]/125[R]	160[R]/160[R]	200[R]/200[R]	315[R]/315[R]	400[R]/400[R]	400[R]/400[R]	500/500	800[R]/800[R]
500 VDC	DC-20 A / DC-20 B	125/125	160/160	200/200	250/250	315/315	400/400	500/500	630/630	800/800
500 VDC	DC-21 A / DC-21 B	125[R]/125[R]	125[R]/125[R]	160[R]/200[R]	200[R]/200[R]	315[R]/315[R]	400[R]/400[R]	400[R]/400[R]	500[R]/500[R]	800[R]/800[R]
500 VDC	DC-22 A / DC-22 B	125[R]/125[R]	125[R]/125[R]	160[R]/160[R]	200[R]/200[R]	315[R]/315[R]	315[R]/400[R]	315[R]/400[R]	500[R]/500[R]	800[R]/800[R]
500 VDC	DC-23 A / DC-23 B	125[R]/125[R]	125[R]/125[R]	160[R]/160[R]	200[R]/200[R]	315[R]/315[R]	315[R]/400[R]	315[R]/400[R]	500[R]/500[R]	800[R]/800[R]
Operational power in AC-23 A (kW) [1][3]										
At 415 VAC without pre-break in AC[1]		63/63	80/80	100/100	132/132	160/160	220/220	280/280	280/280	450/450
Reactive power (kvar)										
At 400 VAC (kvar)[3]		55	75	90	115	145	185	230	290	365
Fuse protected short-circuit withstand (kA rms prospective)[4]										
Prospective short-circuit current (kA rms)		100	100	80	50	100	100	100	70	50
Associated fuse rating (A)		125	160	200	250	315	400	500	630	800
Circuit breaker protected short-circuit withstand with any circuit breaker that ensures tripping in less than 0.3s at 690 VAC										
Rated short-time withstand current 0.3s, I_{cw} (kA rms)		15	15	17	17	25	25	25	25	50
Short-circuit capacity (without protection)										
Rated short-time withstand current 1s, I_{cw} (kA rms)		7	7	9	9	13	13	13	13	35
Rated short-circuit making capacity without fuses I_{cm} (kA peak)		11.9	11.9	15.3	15.3	26	26	26	26	73.5
Connection										
Maximum Cu cable cross-section (mm²)		35	50	70	95	150	185	240	2 x 150	2 x 185
Minimum Cu busbar cross-section (mm²)									2 x 30 x 5	2 x 40 x 5
Maximum Cu cable cross-section (mm²)		50	95	95	150	240	240	240	2 x 300	2 x 300
Maximum Cu busbar width (mm)		25	25	32	32	40	40	40	50	63
Tightening torque min/max (Nm)		9/-	9/-	20/-	20/-	20/-	20/-	20/-	20/-	40/45
Mechanical characteristics										
Durability (number of operating cycles)		10000	10000	10000	10000	10000	10000	10000	10000	3000
Operating effort (Nm)		6.5	6.5	10	10	10	14.5	14.5	14.5	37
Weight of a 3 pole device (kg)		1	1.5	2	2	3.5	3.5	3.5	3.5	8
Weight of a 4 pole device (kg)		1.5	1.5	2	2	4	4	4.5	4.5	10



SIRCO AC 3 x 250 A direct handle

All rights reserved © Socomec 2012

socomec
Innovative Power Solutions

Technical Data – Moulded Case Circuit Breaker

Common characteristics			
Rated voltages			
Insulation voltage (V)	Ui		800
Impulse withstand voltage (kV)	Uimp		8
Operational voltage (V)	Ue	AC 50/60 Hz	690
Suitability for isolation		IEC/EN 60947-2	yes
Utilisation category			A
Pollution degree		IEC 60664-1	3

Common characteristics			
Control			
	Manual	With toggle	■
		With direct or extended rotary handle	■
	Electrical	With remote control	■
Versions			
	Fixed		■
	Withdrawable	Plug-in base	■
		Chassis	■



Circuit breakers				NSX400								NSX630									
				F	N	H	S	L	R	HB1	HB2	F	N	H	S	L	R	Ir = 22			
Breaking capacity levels																					
Electrical characteristics as per IEC 60947-2																					
Rated current (A)	In	40 °C		400					400			630					630				
Number of poles				3, 4					3, 4			3, 4					3, 4				
Breaking capacity (kA rms)																					
	Icu	AC 50/60 Hz	220/240 V	40	85	100	120	150	200	-	-	40	85	100	120	150	200				
			380/415 V	36	50	70	100	150	200	-	-	36	50	70	100	150	200	-	-	200	-
			440 V	30	42	65	90	130	200	-	-	30	42	65	90	130	200	-	-	200	-
			500 V	25	30	50	65	70	80	85	100	25	30	50	65	70	80	85	100	80	85
			525 V	20	22	35	40	50	65	80	100	20	22	35	40	50	65	80	100	65	80
			660/690 V	10	10	20	25	35	45	75	100	10	10	20	25	35	45	75	100	45	75
Service breaking capacity (kA rms)																					
	Ics	AC 50/60 Hz	220/240 V	40	85	100	120	150	200	-	-	40	85	100	120	150	200	-	-	200	-
			380/415 V	36	50	70	100	150	200	-	-	36	50	70	100	150	200	-	-	200	-
			440 V	30	42	65	90	130	200	-	-	30	42	65	90	130	200	-	-	200	-
			500 V	25	30	50	65	70	80	85	100	25	30	50	65	70	80	85	100	80	85
			525 V	10	11	11	12	12	65	80	100	10	11	11	12	12	65	80	100	-	-
			660/690 V	10	10	10	12	12	45	75	100	10	10	10	12	12	45	75	100	-	-
Durability (C-O cycles)		Mechanical		15000					15000			15000					15000				
		Electrical	440 V	12000					12000			8000					8000				
			In/2	6000					6000			4000					4000				
			690 V	6000					6000			6000					6000				
			In/2	3000					3000			2000					2000				
Characteristics as per Nema AB1																					
Breaking capacity (kA rms)		AC 50/60 Hz	240 V	40	85	100	120	150	200	-	-	40	85	100	120	150	200	-	-	200	-
			480 V	30	42	65	90	130	150	85	100	30	42	65	90	130	150	85	100	150	85
			600 V	-	20	35	40	50	50	75	100	-	20	35	40	50	50	75	100	50	75
Characteristics as per UL 508																					
Breaking capacity (kA rms)		AC 50/60 Hz	240 V	85	85	85	-	-	-	-	-	85	85	85	-	-	-	-	-	-	-
			480 V	35	50	65	-	-	-	-	-	35	50	65	-	-	-	-	-	-	-
			600 V	20	10	20	-	-	-	-	-	20	20	20	-	-	-	-	-	-	-

All rights reserved © Socomec 2012

socomec
Innovative Power Solutions

Technical Data – Air Circuit Breaker



Basic circuit-breaker			NW08	NW10	NW12	NW16		NW20								NW40b
Circuit-breaker as per IEC 60947-2																
Rated current (A)		at 40 °C / 50 °C [1]	800	1000	1250	1600		2000								4000
Rating of 4th pole (A)			800	1000	1250	1600		2000								4000
Sensor ratings (A)			400 to 800	400 to 1000	630 to 1250	800 to 1600		1000 to 2000								2000 to 4000
Type of circuit breaker			N1	H1 [7]	H2	L1 [8]	H10	H1 [7]	H2	H3						H1
Ultimate breaking capacity (kA rms) V AC 50/60 Hz	Icu	220/415/440 V	42	65	100	150	-	65	100	150						100
		525 V	42	65	85	130	-	65	85	130						100
		690 V	42	65	85	100	-	65	85	100						100
		1150 V	-	-	-	-	50	-	-	-						-
Rated service breaking capacity (kA rms)	Ics	% Icu	100 %					100 %								100 %
Utilisation category			B					B								B
Rated short-time withstand current (kA rms) V AC 50/60 Hz	Icw	1 s	42	65	85	30	50	65	85	65						100
		3 s	22	36	50	30	50	36	75	65						100
Integrated instantaneous protection (kA peak ±10 %)			-	-	190	80	-	-	190	150						-
Rated making capacity (kA peak) V AC 50/60 Hz	Icm	220/415/440 V	88	143	220	330	-	143	220	330						220
		525 V	88	143	187	286	-	143	187	286	286	-	143	187	286	-	220
		690 V	88	143	187	220	-	143	187	220	220	-	143	187	220	-	220
		1150 V	-	-	-	-	105	-	-	-	-	105	-	-	-	105	-
Break time (ms) between tripping order and arc extinction			25	25	25	10	25	25	25	25	10	25	25	25	25	25	25
Closing time (ms)			< 70					< 70					< 70			< 80
Circuit-breaker as per NEMA AB1																
Breaking capacity (kA) V AC 50/60 Hz		240/480 V	42	65	100	150	-	65	100	150	150	-	65	100	150	-	100
		600 V	42	65	85	100	-	65	85	100	100	-	65	85	100	-	100
Unprotected circuit-breaker																
Tripping by shunt trip as per IEC 60947-2																
Type of circuit breaker				HA	HF [3]			HA	HF [3]				HA	HF [3]		HA
Ultimate breaking capacity (kA rms) V AC 50/60 Hz	Icu	220...690 V		50	85			50	85				55	85		85
Rated service breaking capacity (kA rms)	Ics	% Icu		100 %				100 %					100 %			100 %
Rated short-time withstand current (kA rms)	Icw	1 s		50	85			50	85				55	85		85
		3 s		36	50			36	75				55	75		85
Overload and short-circuit protection External protection relay: short-circuit protection, maximum delay: 350 ms [4]				-	-			-	-				-	-		-
Rated making capacity (kA peak) V AC 50/60 Hz	Icm	220...690 V		105	187			105	187				121	187		187

Switch-disconnector as per IEC 60947-3 and Annex A			NW08/NW10/NW12/NW16				NW20			NW25/NW32/NW40			NW4
Type of switch-disconnector			NA	HA	HF	HA10	HA	HF	HA10	HA	HF	HA10	HA
Rated making capacity (kA peak) AC23A/AC3 category V AC 50/60 Hz	Icm	220...690 V	88	105	187	-	105	187	-	121	187	-	187
		1150 V	-	-	-	105	-	-	105	-	-	105	-
Rated short-time withstand current (kA rms) AC23A/AC3 category V AC 50/60 Hz	Icw	1 s	42	50	85	50	50	85	50	55	85	50	85
		3 s	-	36	50	50	36	75	50	55	75	50	85

Earthing switch		
Latching capacity (kA peak)		135
Rating short time withstand (kA rms)	Icw	1 s 60 Hz
		3 s 50 Hz

Mechanical and electrical durability as per IEC 60947-2/3 at In/Ie																	
Service life	Mechanical	with maintenance	25					20									10
C/O cycles x 1000		without maintenance	12.5					10									5
Type of circuit breaker			N1/H1/H2		L1		H10	H1/H2		H3	L1		H10	H1/H2		H3	H10	H1
Rated current		In (A)	800/1000/1250/1600					2000						2500/3200/4000				4000b
C/O cycles x 1000	Electrical	without maintenance	440 V [6]	10	3	-		8	2	3	-	5	1.25	-	1.5		
IEC 60947-2			690 V	10	3	-		6	2	3	-	2.5	1.25	-	1.5		

What to put as incomer gear?

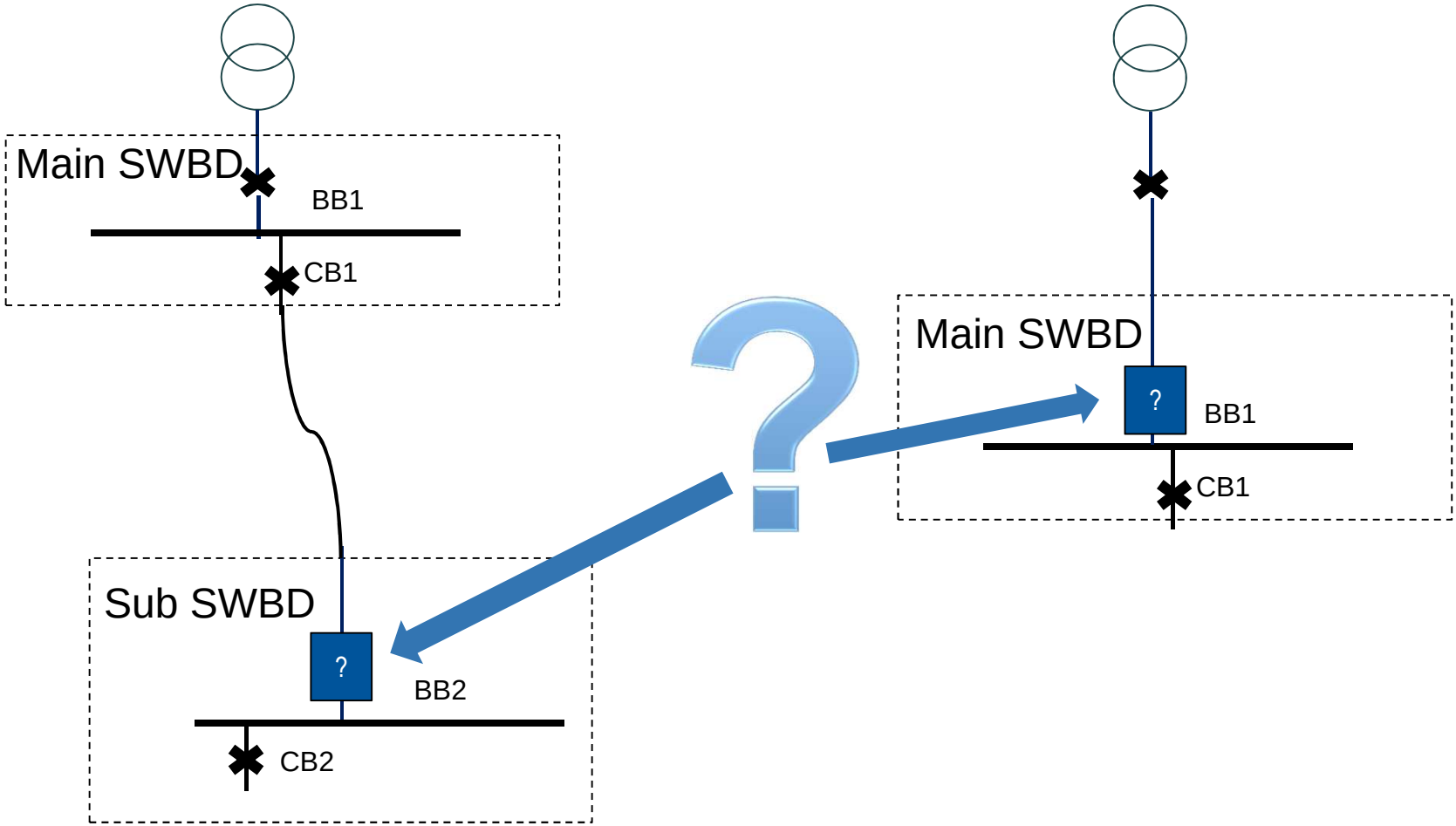

All rights reserved © Socomec 2012

socomec
Innovative Power Solutions

What do you install in ?

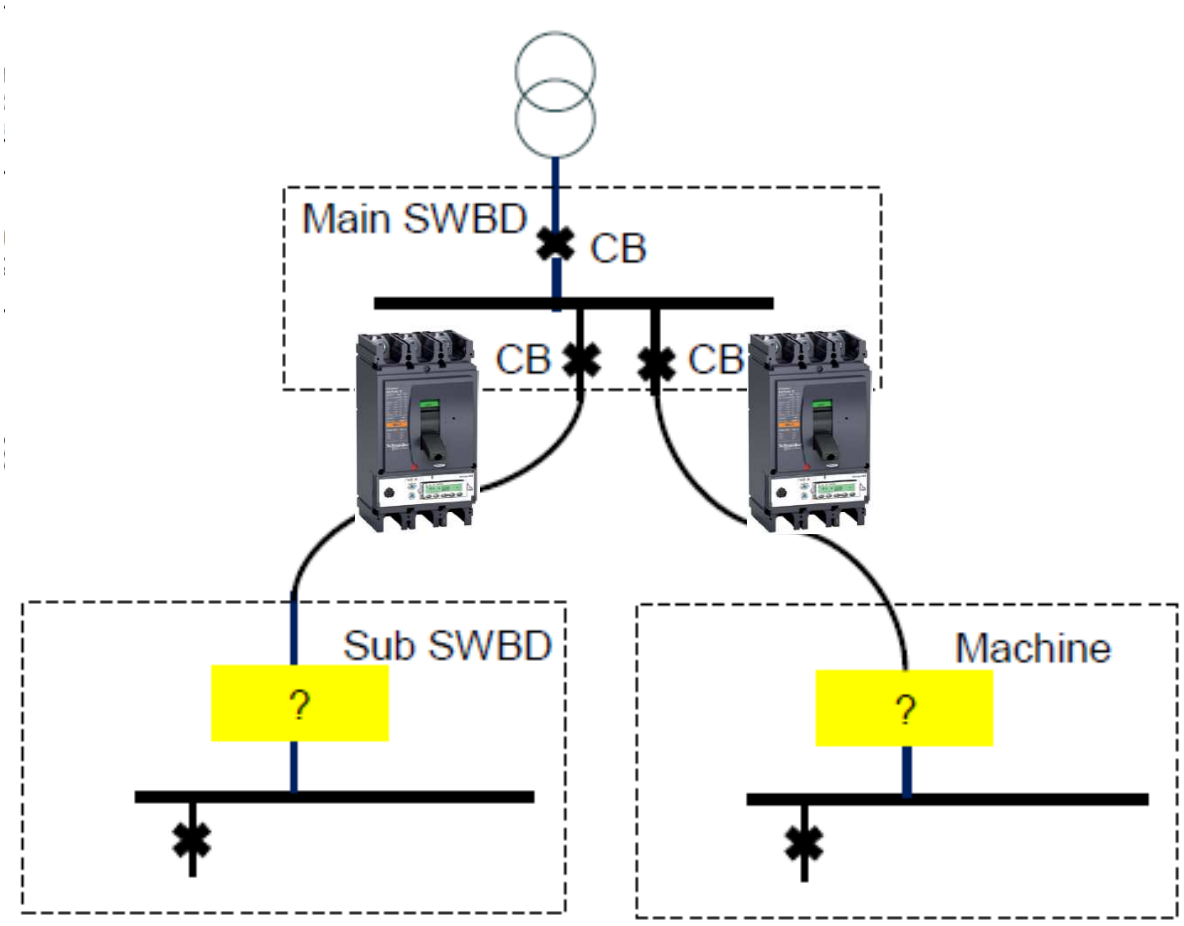

All rights reserved © Socomec 2012

socomec
Innovative Power Solutions

Circuit Breaker as Incomer – A common mistake

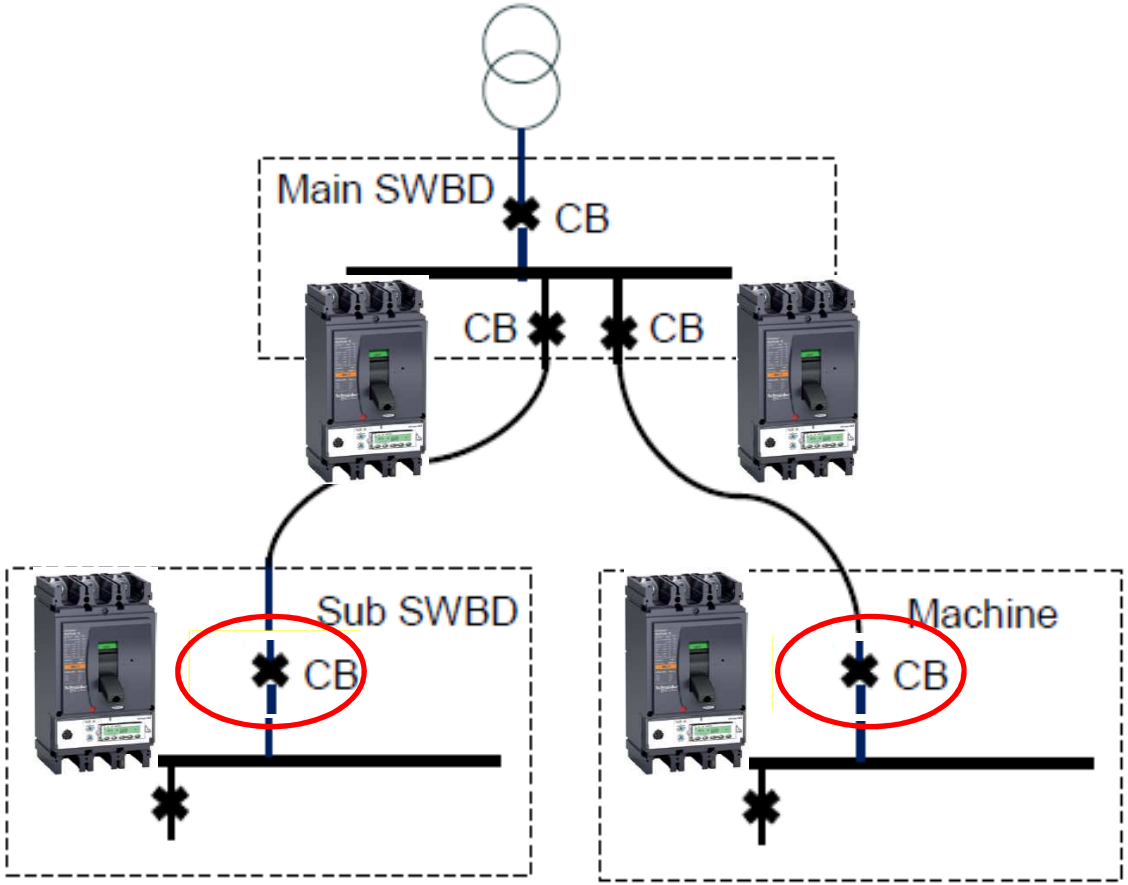

All rights reserved © Socomec 2012

socomec
Innovative Power Solutions

The PFC Capacitor panel GOOD example

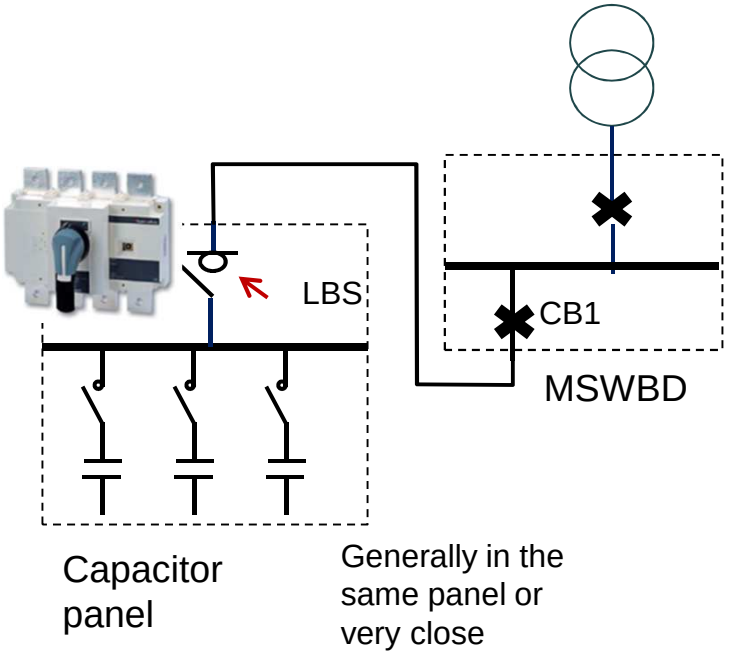

- Generally the PFC Capacitor panels are equiped with a LBS Disconnector as incomer
- It's widely recognized as a good & efficient solution in agreement with the Standards
  - IEC 60364 for installation rules
    - IEC 60364-5-53 § 536.2 requires a Disconnector for isolation
    - NO requirement of additional protection
  - IEC 60947-3 for Disconnectors
- It is an example of a good design!

All rights reserved © Socomec 2012

socomec
Innovative Power Solutions

Protection schemes

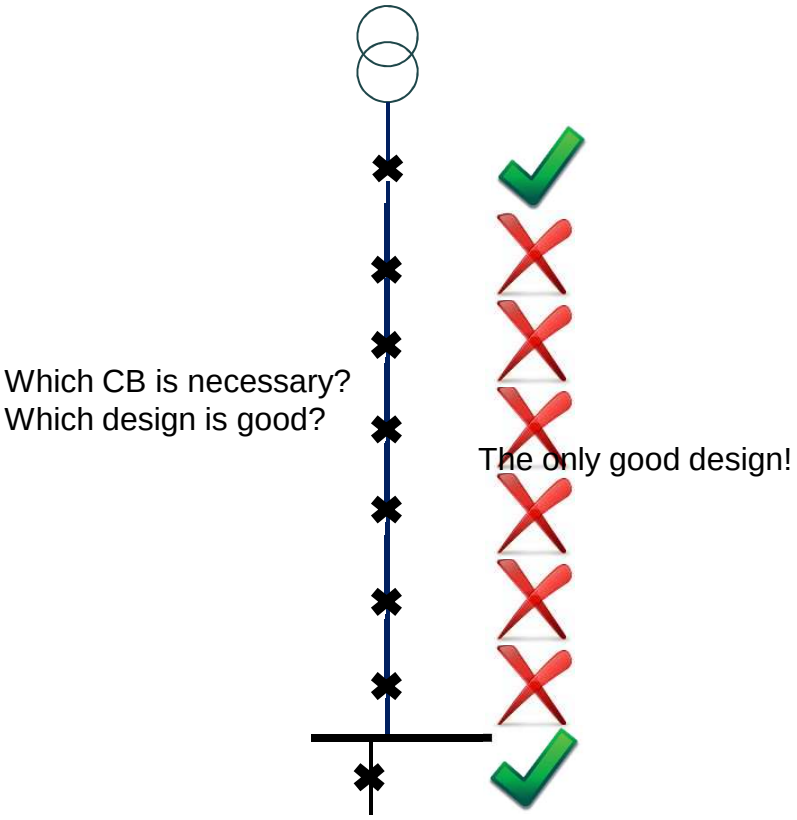

- Starting from a caricature of a bad design we understand the good one!
- This common knowledge is based on sound Standards implementation …

All rights reserved © Socomec 2012

socomec
Innovative Power Solutions

What is really technically at stake ?

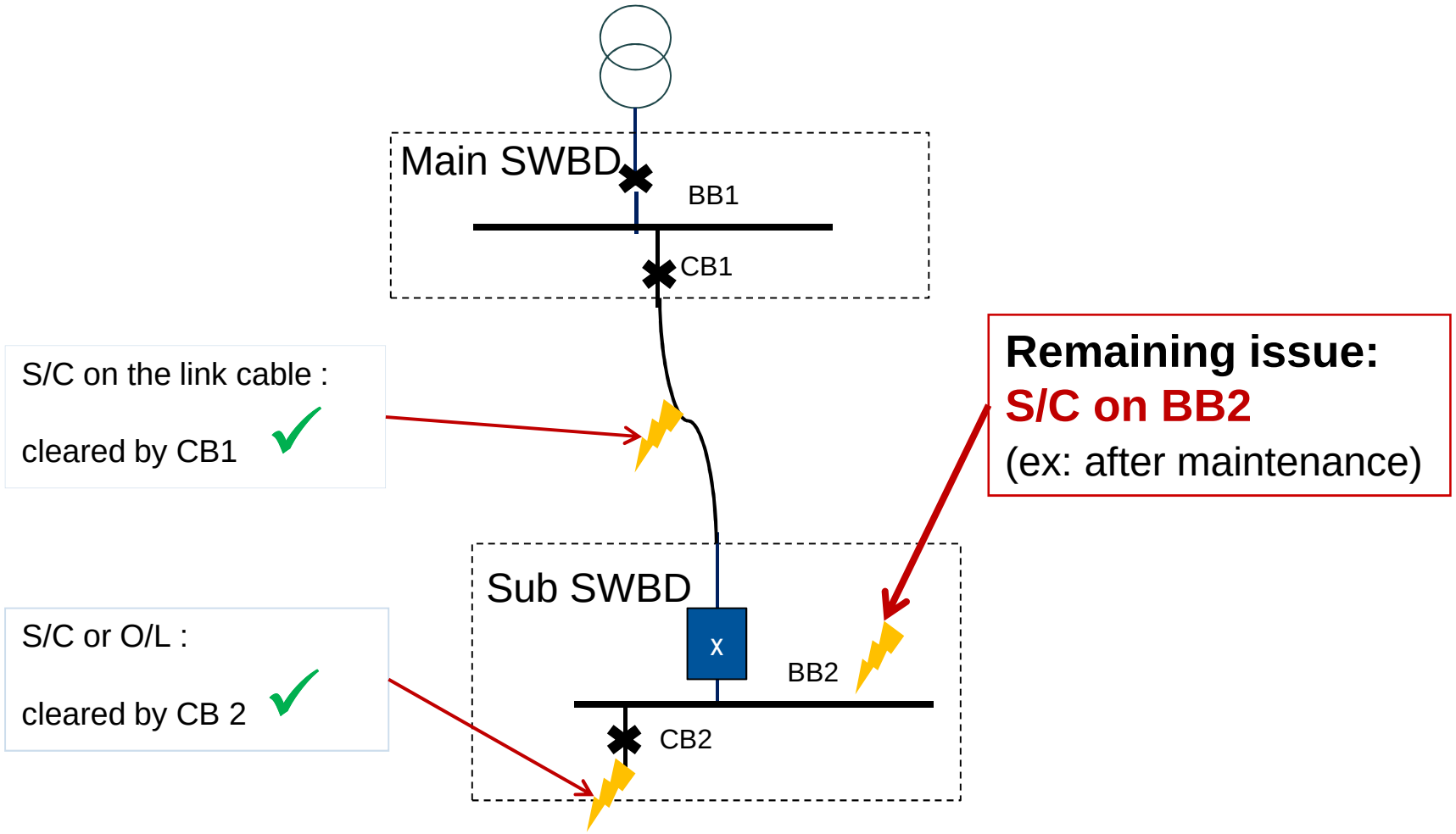

All rights reserved © Socomec 2012

socomec
Innovative Power Solutions

Just three questions

- What is the IEC 60364 requirement on a SWBD incomer?
- What is the IEC 60364 requirement to add a CB in a circuit?
- What are the consequences if I put 2 CBs of same rating in series?

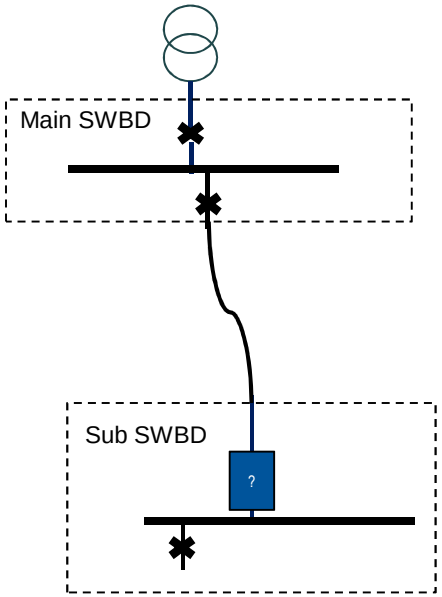

All rights reserved © Socomec 2012

socomec
Innovative Power Solutions

IEC 60364 Requirement on SWBD incomer

DISCONNECTION

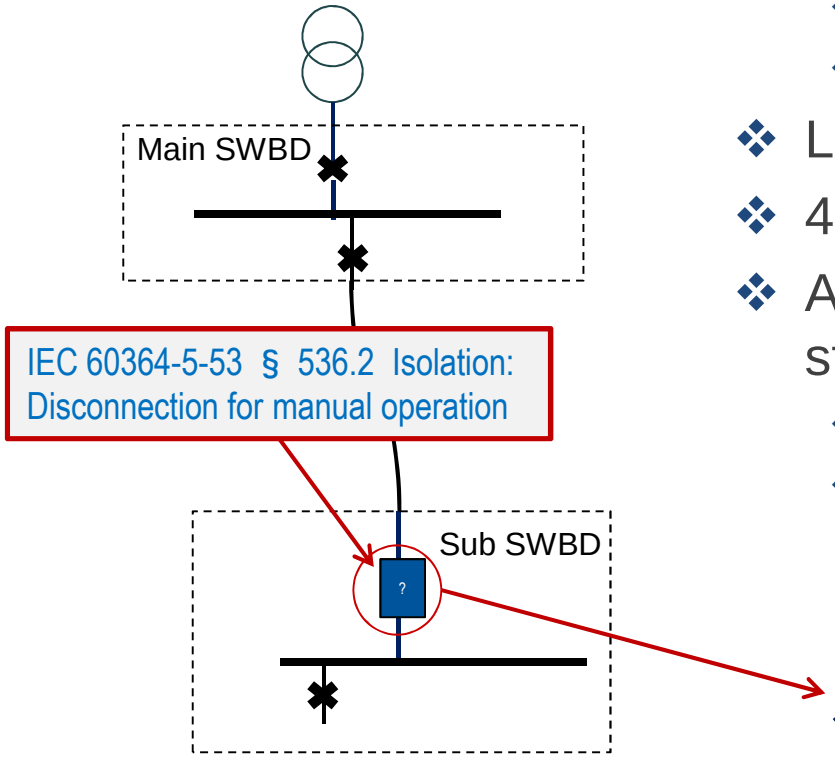

- IEC 60364-5-53 § 536.2 requires
  - Disconnector for isolation
  - Padlocking is compulsory
- LBS = IEC 947-3 ; CB = IEC 947-2
- 4 poles in TNS, TNC-S, IT
- A LBS Disconnector is the de facto standard
  - A Disconnector can't switch ON LOAD
  - Switch Disconnector can be operated ON LOAD.

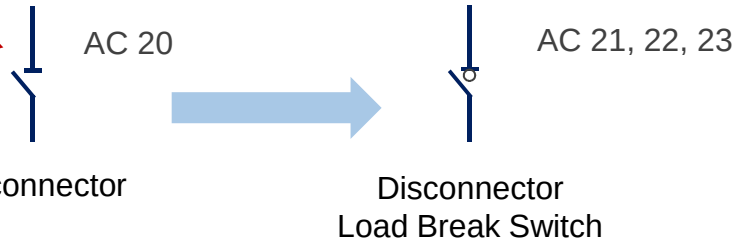

All rights reserved © Socomec 2012

socomec
Innovative Power Solutions

IEC 60364 Requirement to add a CB
a change in the current carrying capability

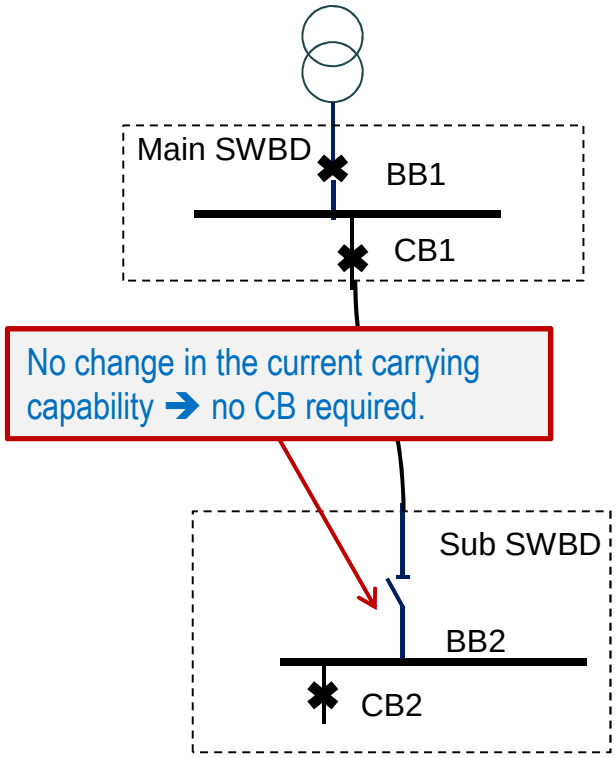

- IEC 60364-4-43
  - O/L § 433.2
  - S/C § 434.2
- New protection device only when there is a change in the current carrying capability
- CB1 & BB2 are of the same rating ➔ No CB required

All rights reserved © Socomec 2012

socomec
Innovative Power Solutions

Consequences if 2 CBs are in series: no selectivity, no limitation curves, worse protection against S/C

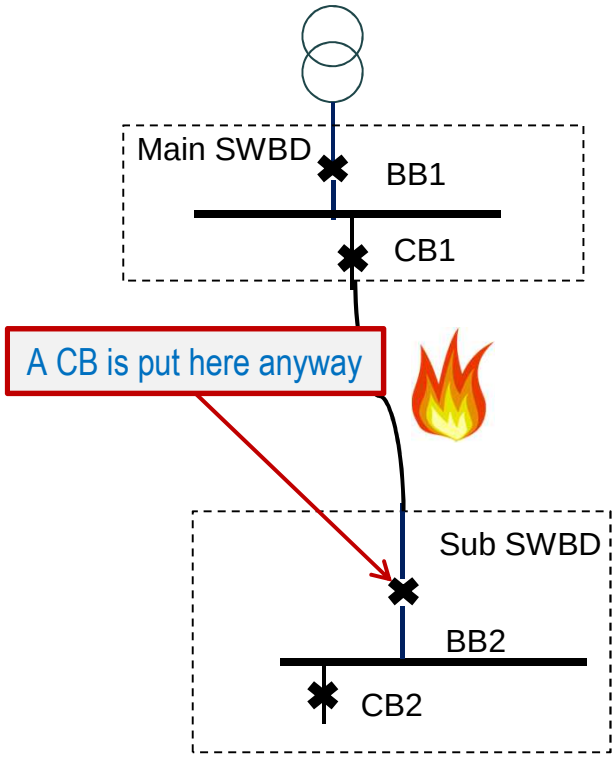

- Anyway, a CB is put on the incomer
- OR a LBS of the same "technology family" than CB1
- Necessarily of the same rating than CB1 (same current).
- Same manufacturer, then same contact system.

WHY

- NO selectivity Vs CB1 !
- 2 negative consequences
  - Designer responsibility is engaged
  - Less protection against S/C: risk of fire!

All rights reserved © Socomec 2012

socomec
Innovative Power Solutions

Consequences if 2 CBs are in series: no selectivity

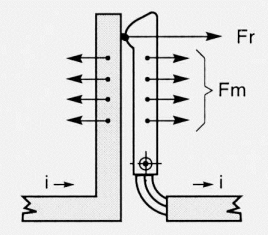

SAME contact system!

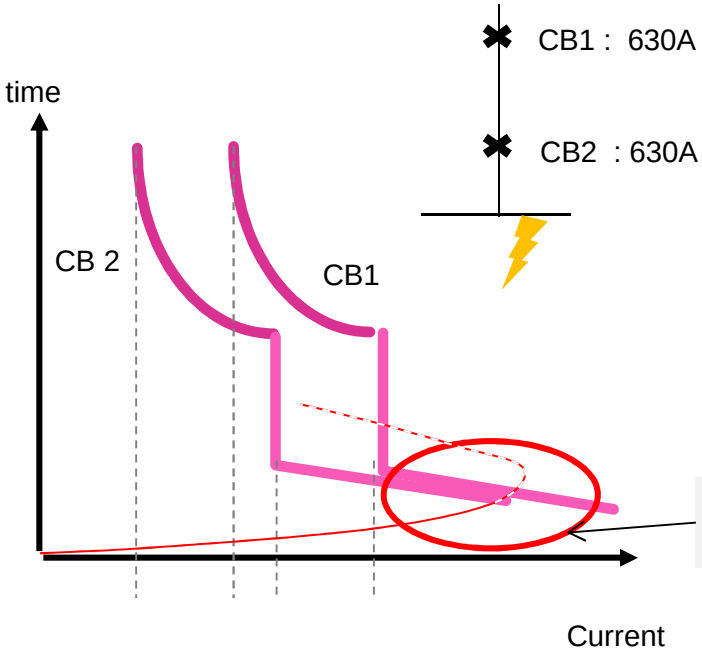

Exactly the same curves

- In case of Short Circuit, we cannot predict which CB will trip first.
  - Both CB curves are strictly identical in the S/C area (same contact system).
- Setting the tripping parameters in case of overload or short delay is useless
  - As no fault will occur in the region of the settings.

All rights reserved © Socomec 2012

socomec
Innovative Power Solutions

Consequences if 2 CBs are in series: Designer responsibility is engaged, worse protection

- with 2 CBs or more, the Designer responsibility is at stake: no available limitation curve

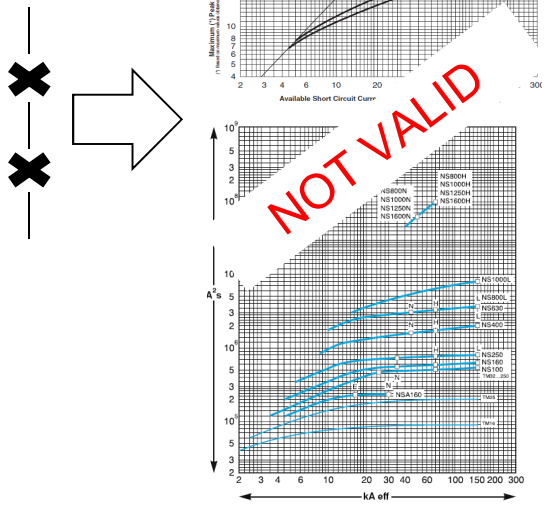

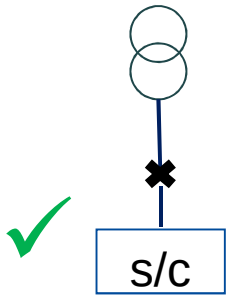

➔Max limitation, min let through energy

➔ Curves are OK

?

IEC 947-2

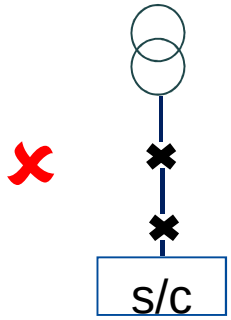

➔ More energy in the BB

➔ No curve

All rights reserved © Socomec 2012

Some other solutions

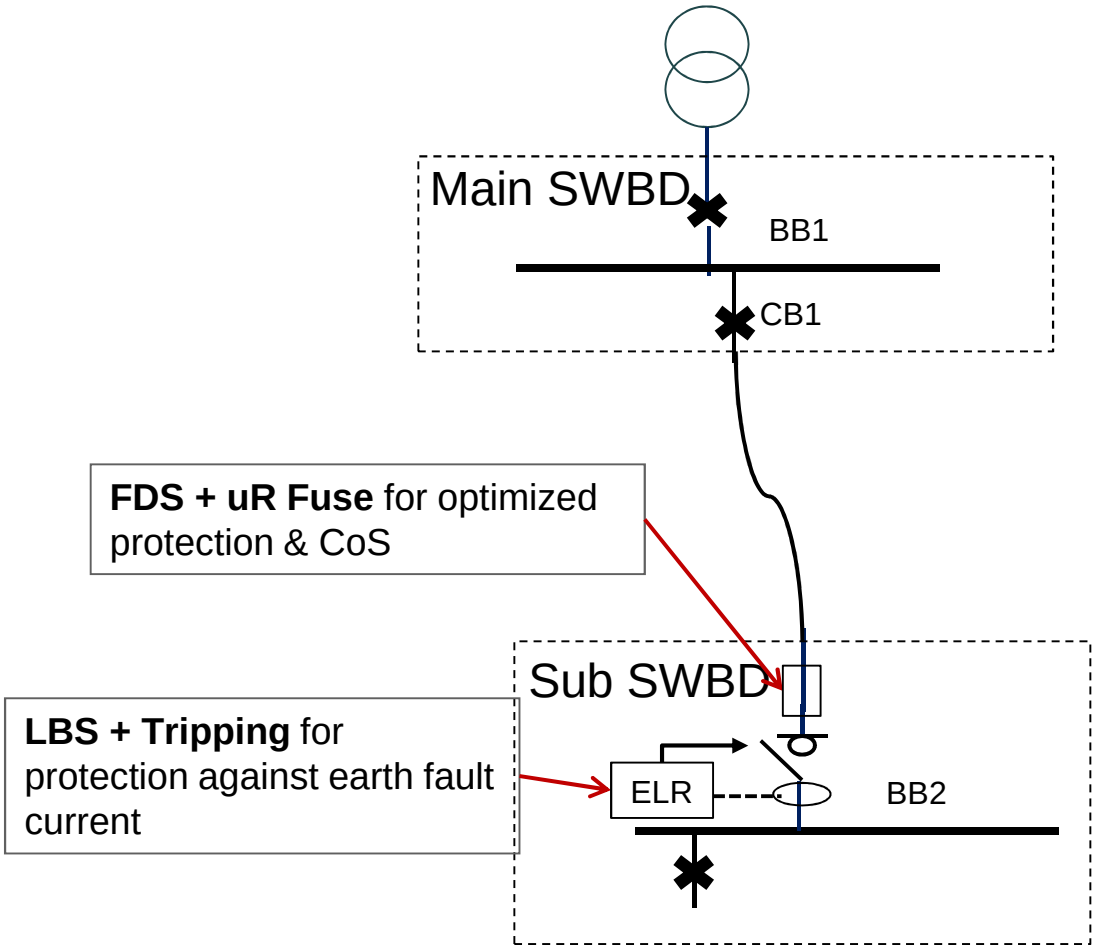

FDS + uR Fuse for optimized protection & CoS

LBS + Tripping for protection against earth fault current

LBS / FDS + tripping: for ELC detection

FDS + uR Fuse: best CoS + protection

- ❑ uR fuse for avoiding conflict on s/c on the BB (very low I^2t)
- ❑ uR fuse doesn't blow on O/L
- ❑ Fuserbloc

All rights reserved © Socomec 2012

socomec
Innovative Power Solutions

Cost savings of 60% using LBS

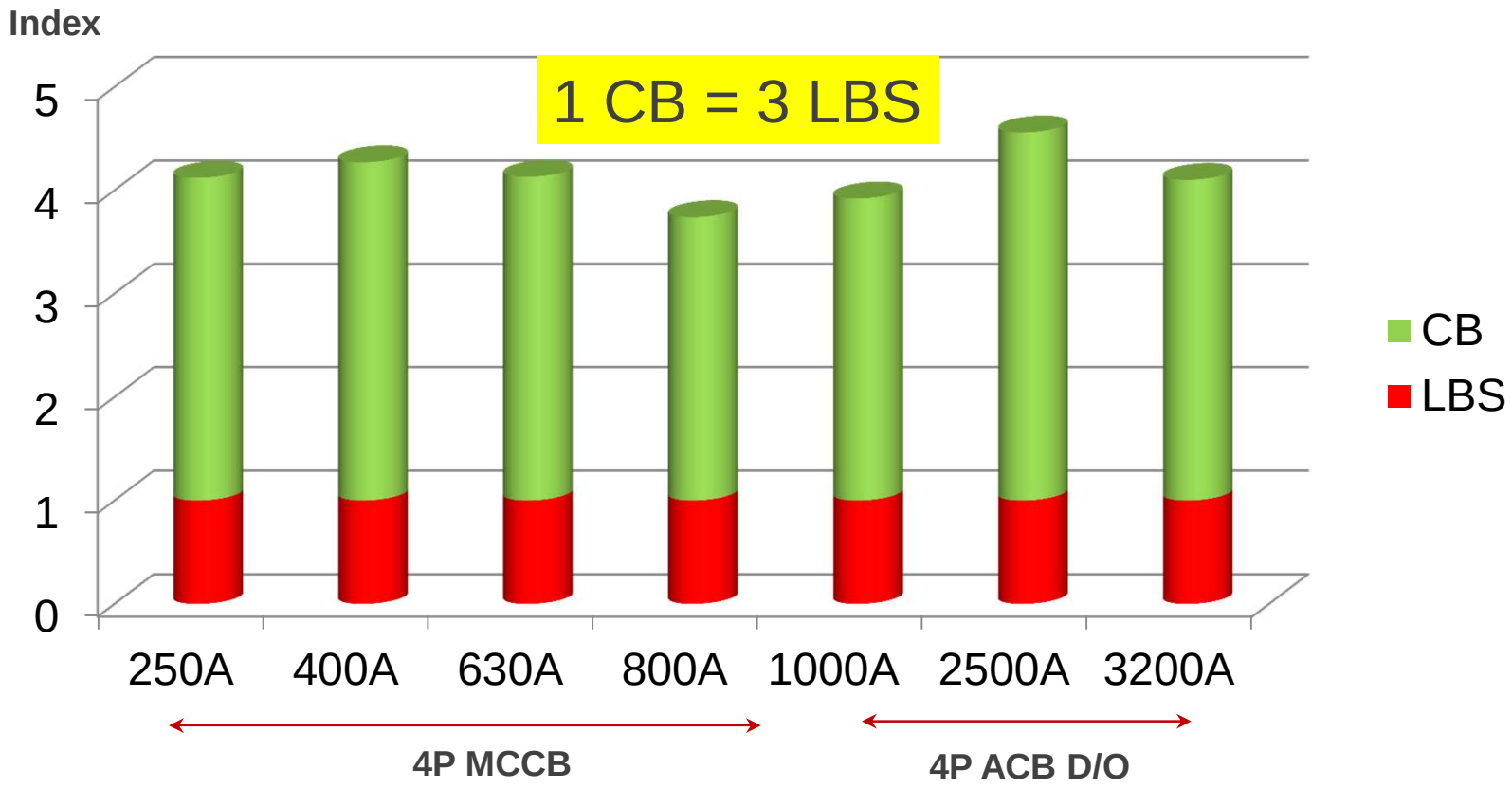

All rights reserved © Socomec 2012

socomec
Innovative Power Solutions

Sub switchboard incomer - Overview

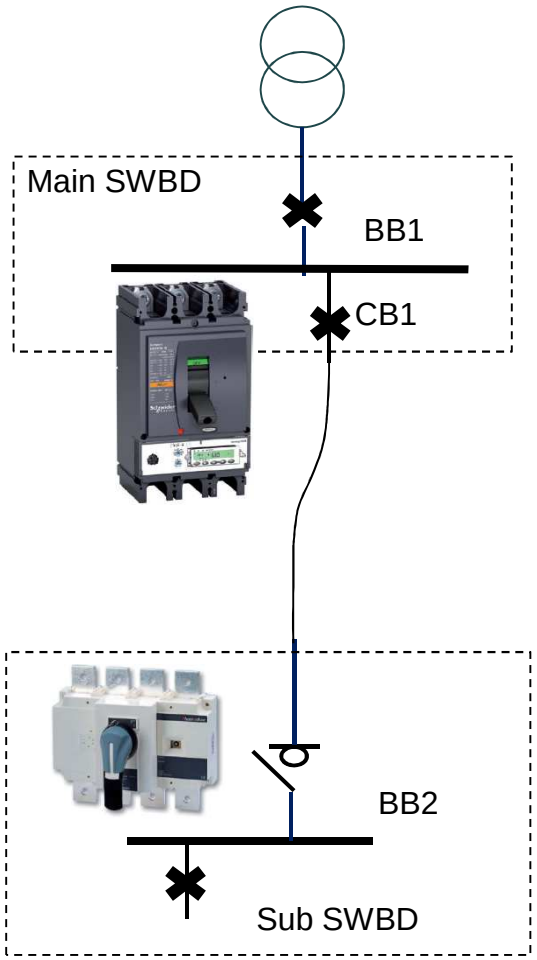

Attributes	LBS	CB
Reliability (MTBF)	Extremely reliable	No
Maintenance	Maintenance Free	Replacement (MCCB) Replacement + Maintenance (ACB)
Safety	Very safe	No

All rights reserved © Socomec 2012

socomec
Innovative Power Solutions

Sub switchboard incomer - Overview

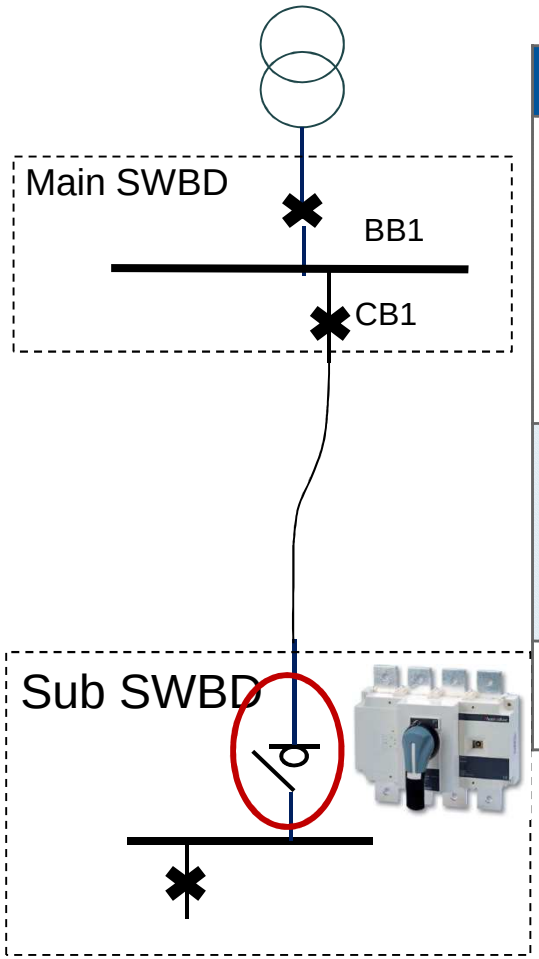

Actor	LBS FDS	CB
Designer	Consistent with the standard Clean selectivity (less energy) Better for S/C @ BB2	Can't take responsibility Risk in case of S/C @ BB2
	Many options on the handle color, lever, IP	
PnB	Lower cost**: Gear cost / 4**	Easy ordering process (Same product)
	Aesthetic Mounting with external handle	
End User	Easy to operate Higher safety (1)	Danger for operator in case of closing CB on S/C

(1) On closing on S/C after maintenance, no arc and gas projection.
On intervention after a s/c on BB2:
- ✓ s/c on cable or in SSB ➔ CB1 trips
- ✓ 100% guarantee that the sub distribution board is off

All rights reserved © Socomec 2012

socomec
Innovative Power Solutions



LBS Applications

All rights reserved © Socomec 2012

socomec
Innovative Power Solutions

Where do you need a switch ?

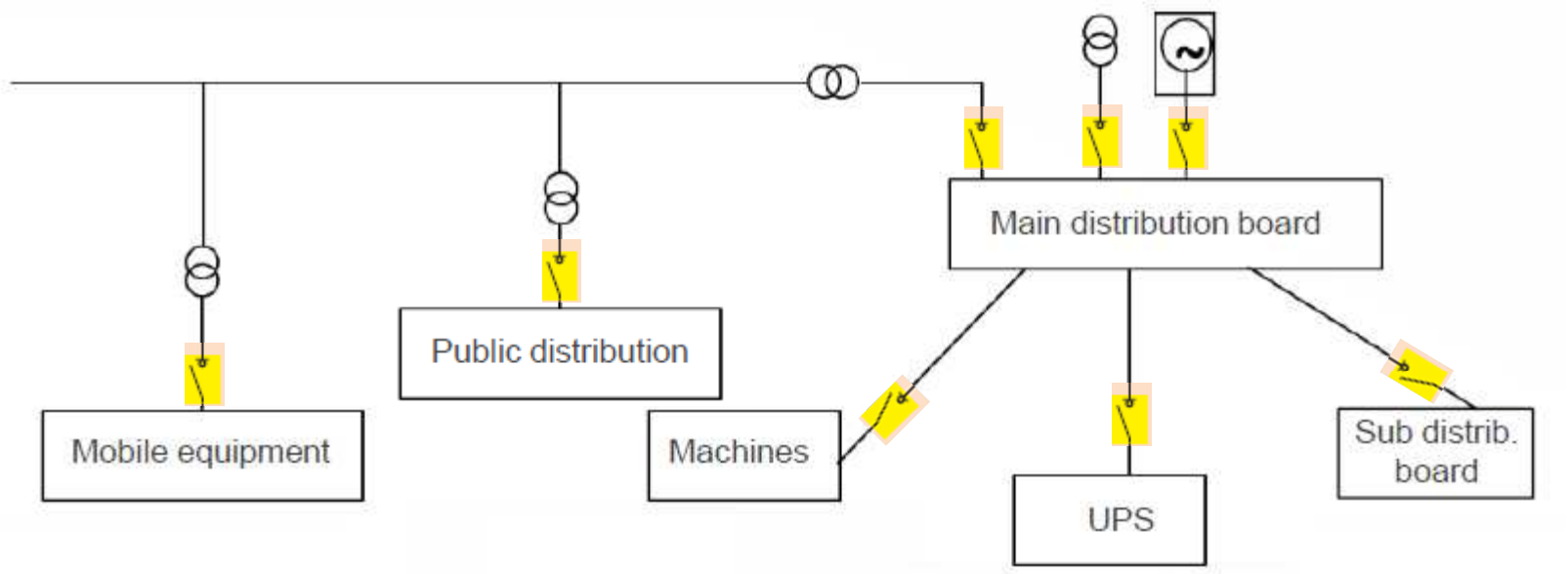

All rights reserved © Socomec 2012

socomec
Innovative Power Solutions

Example of distribution boards (Main / Sub)

1 Main switchboard 2 Sub / distribution switch

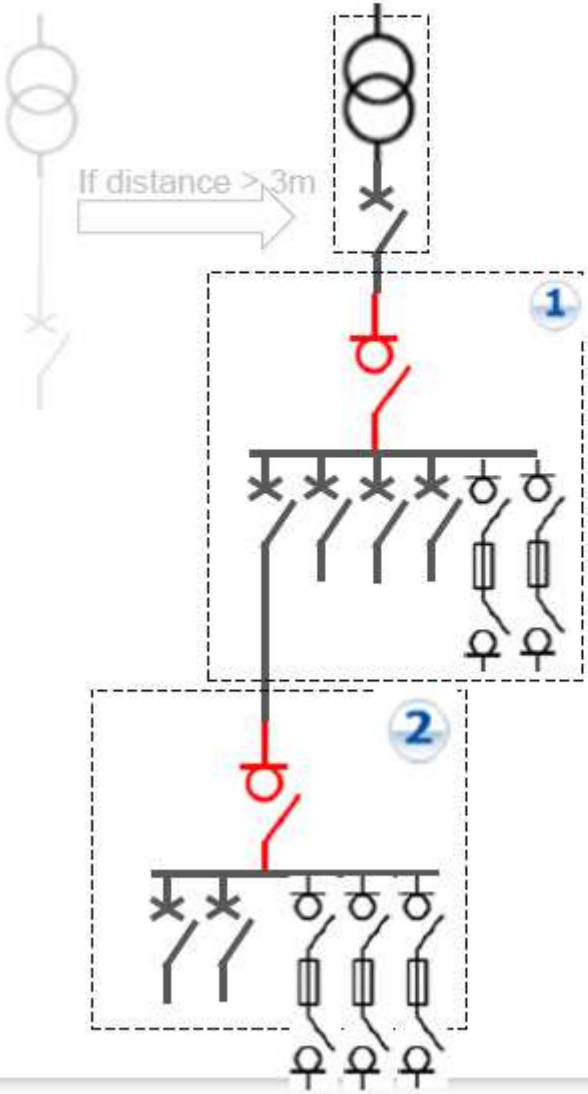

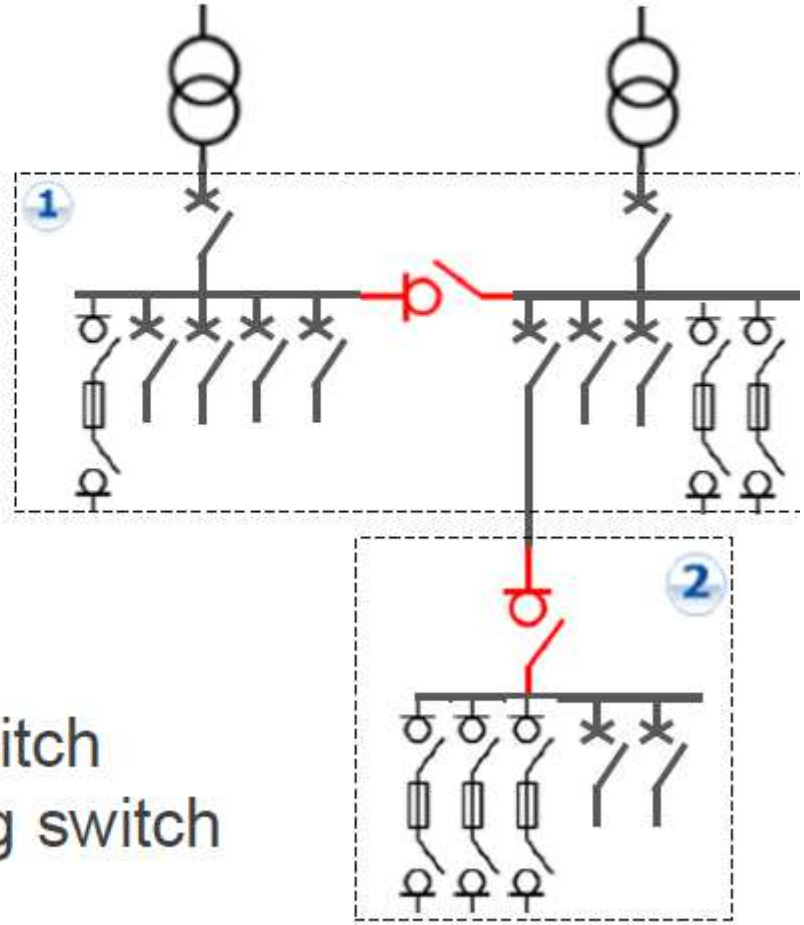

- Main switch
- Coupling switch

Example of machines

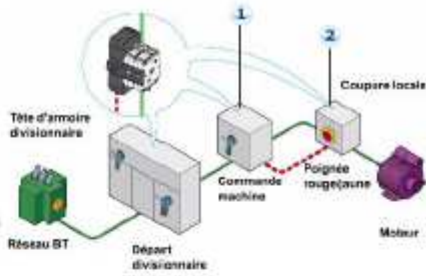

- Cranes, lifts, escalators, conveyors, machine-tools, pumps
  - Main switch…
  - Maintenance of part of the machine

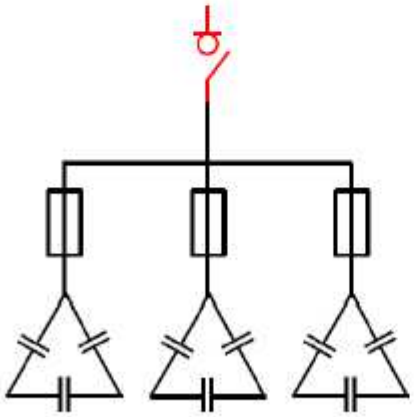

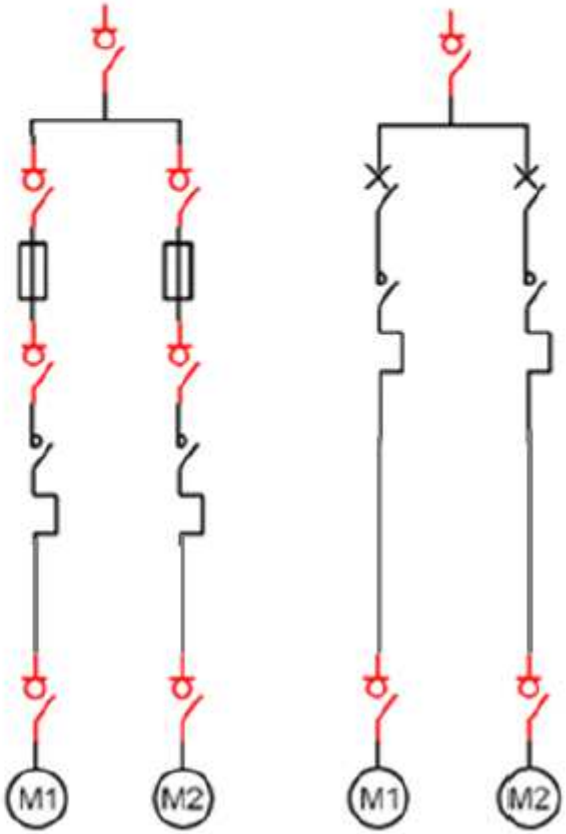

Example of public distribution

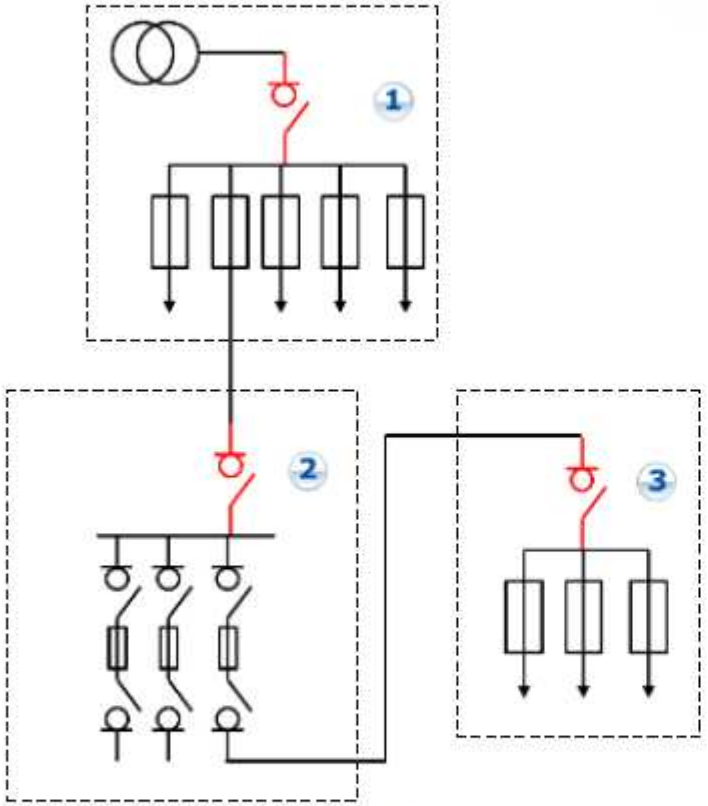

ERDF - TIPI



RESA



- Protection is performed upstream (MV side)
- Need LBS to be able to perform safe maintenance at each level of the installation

European example of LBS incomer (Retail)

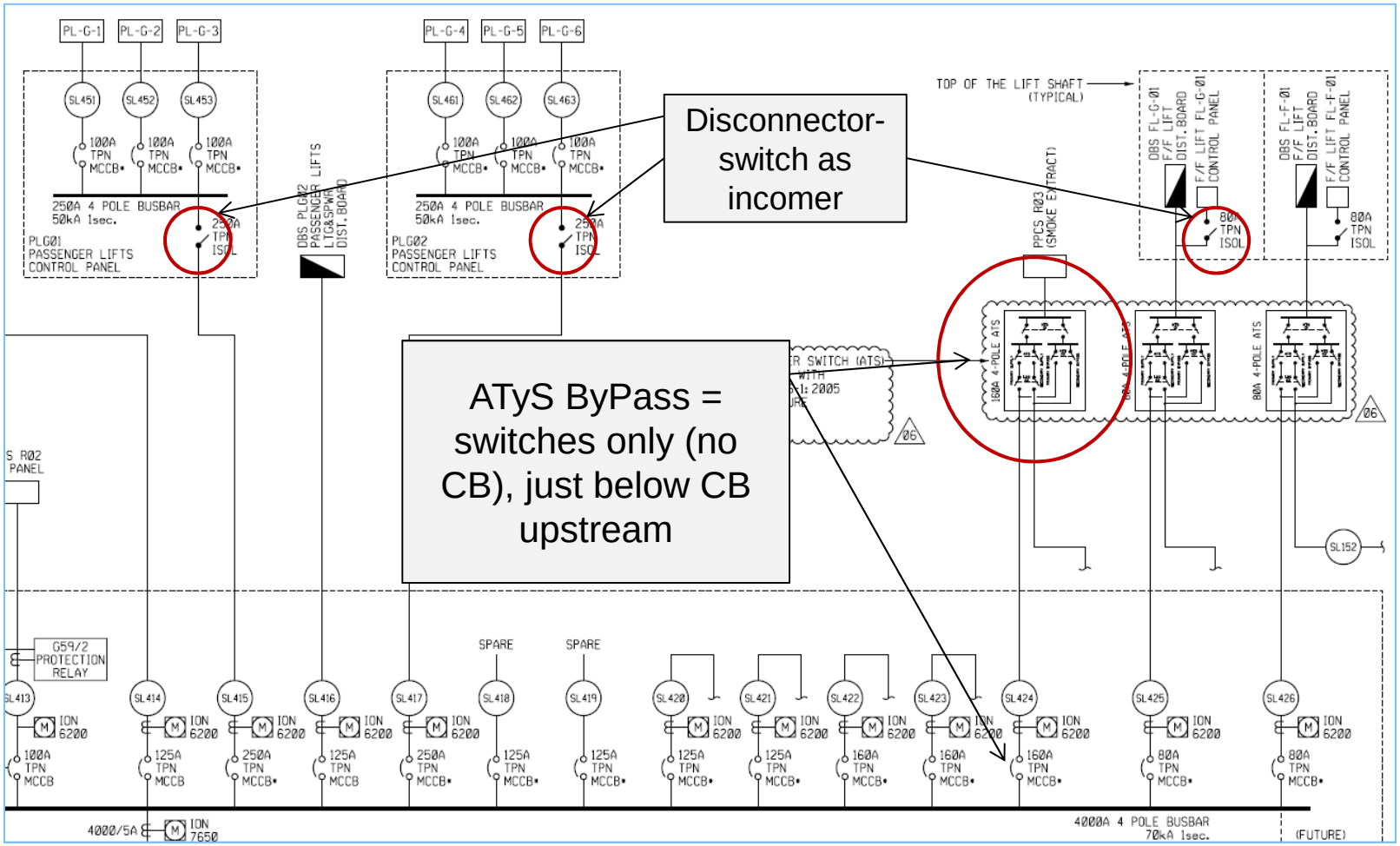

All rights reserved © Socomec 2012

socomec
Innovative Power Solutions

European example of LBS incomer (Retail)

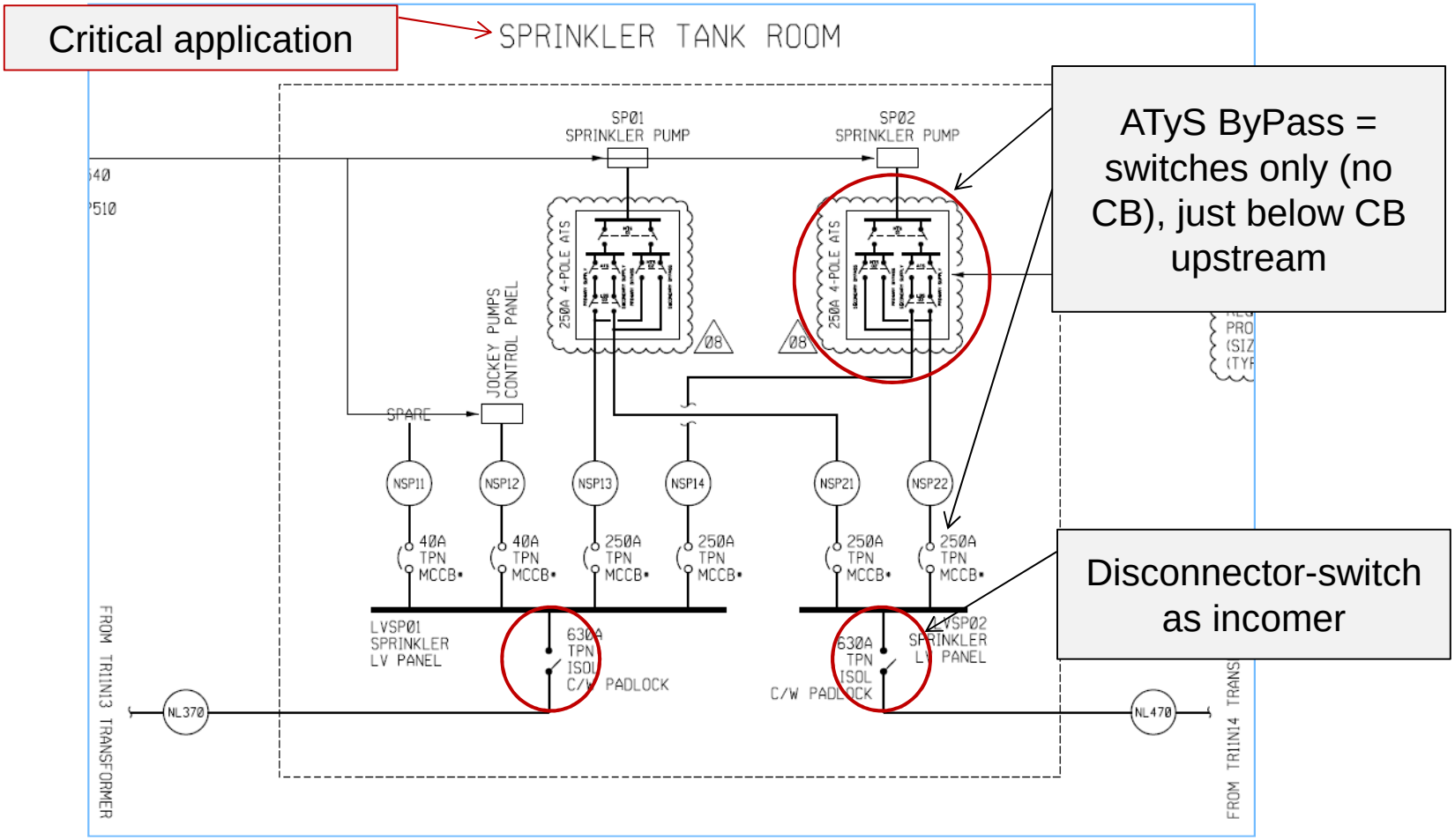

All rights reserved © Socomec 2012

socomec
Innovative Power Solutions

European example of LBS incomer (Building)

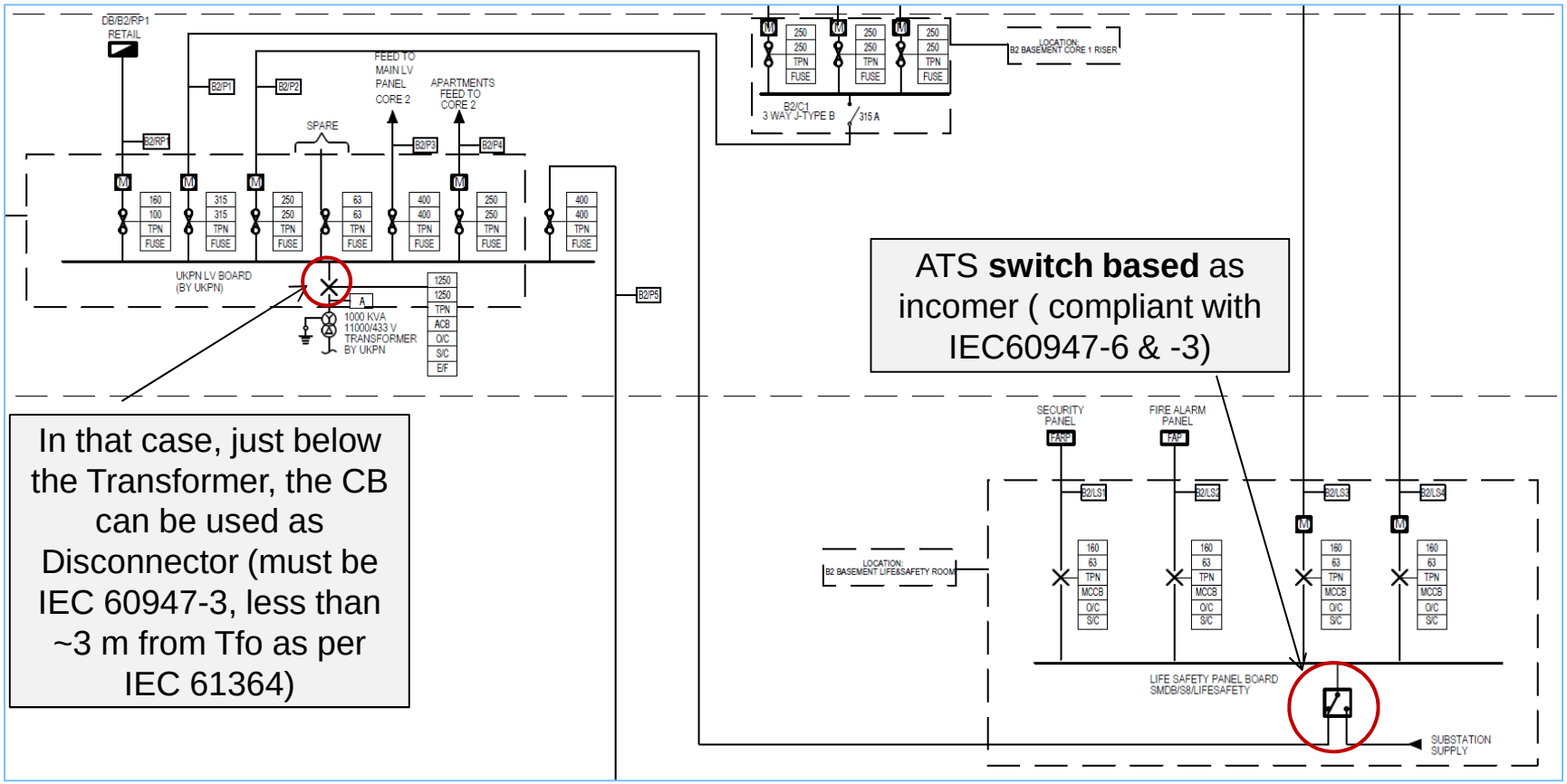

All rights reserved © Socomec 2012

European example of LBS incomer (Hospital)

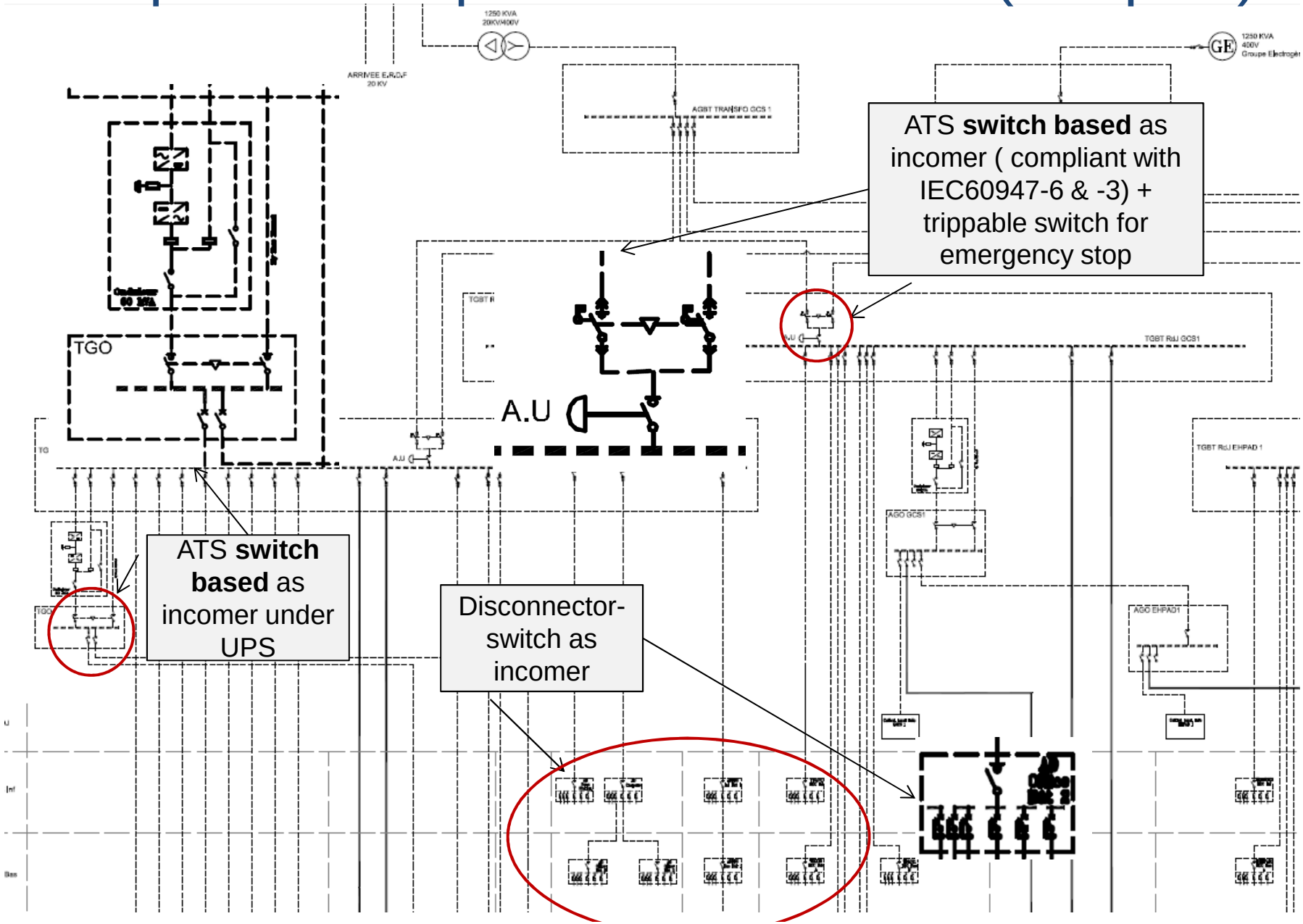

European example of LBS incomer (Hospital)

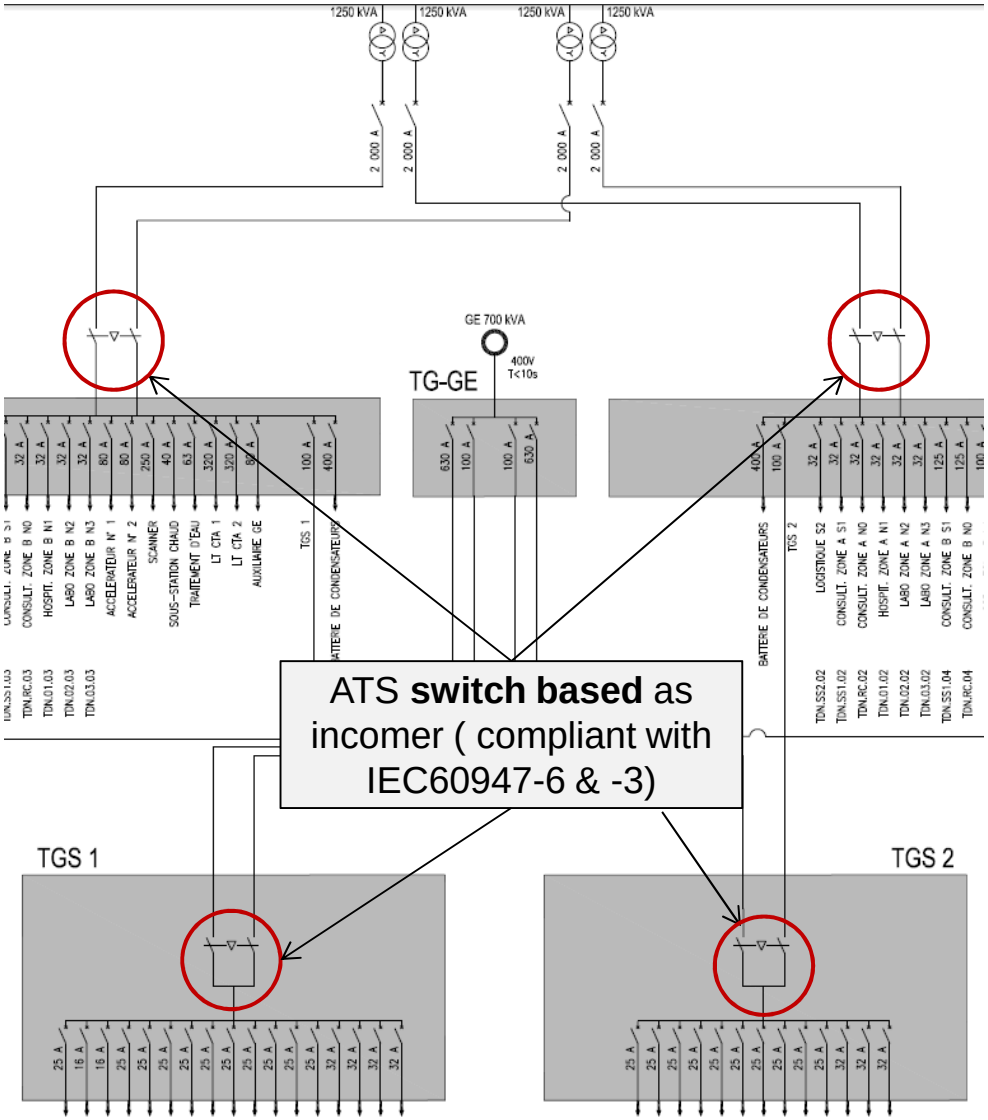

All rights reserved © Socomec 2012

socomec
Innovative Power Solutions

SEA example of LBS incomer

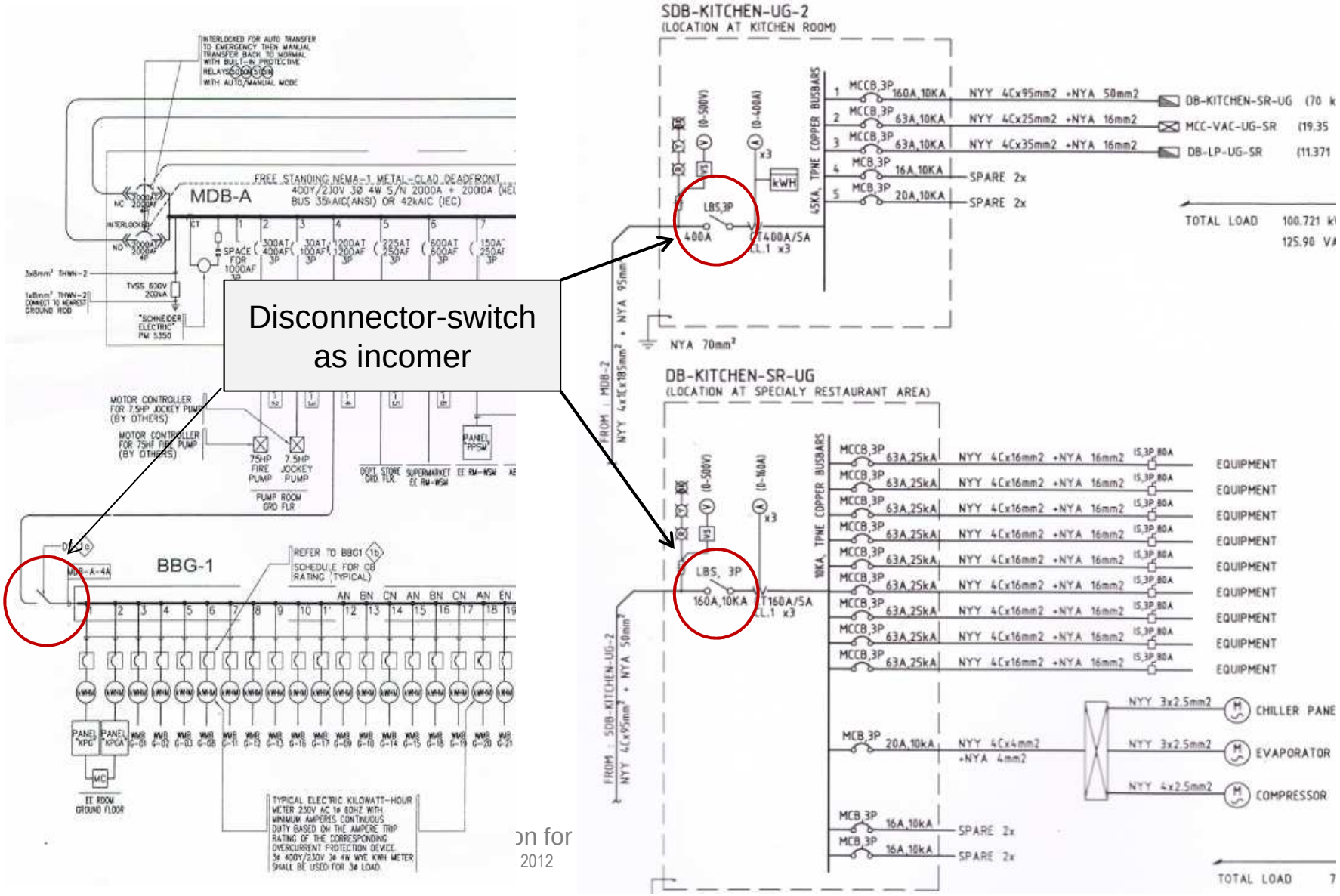

SEA example of LBS incomer

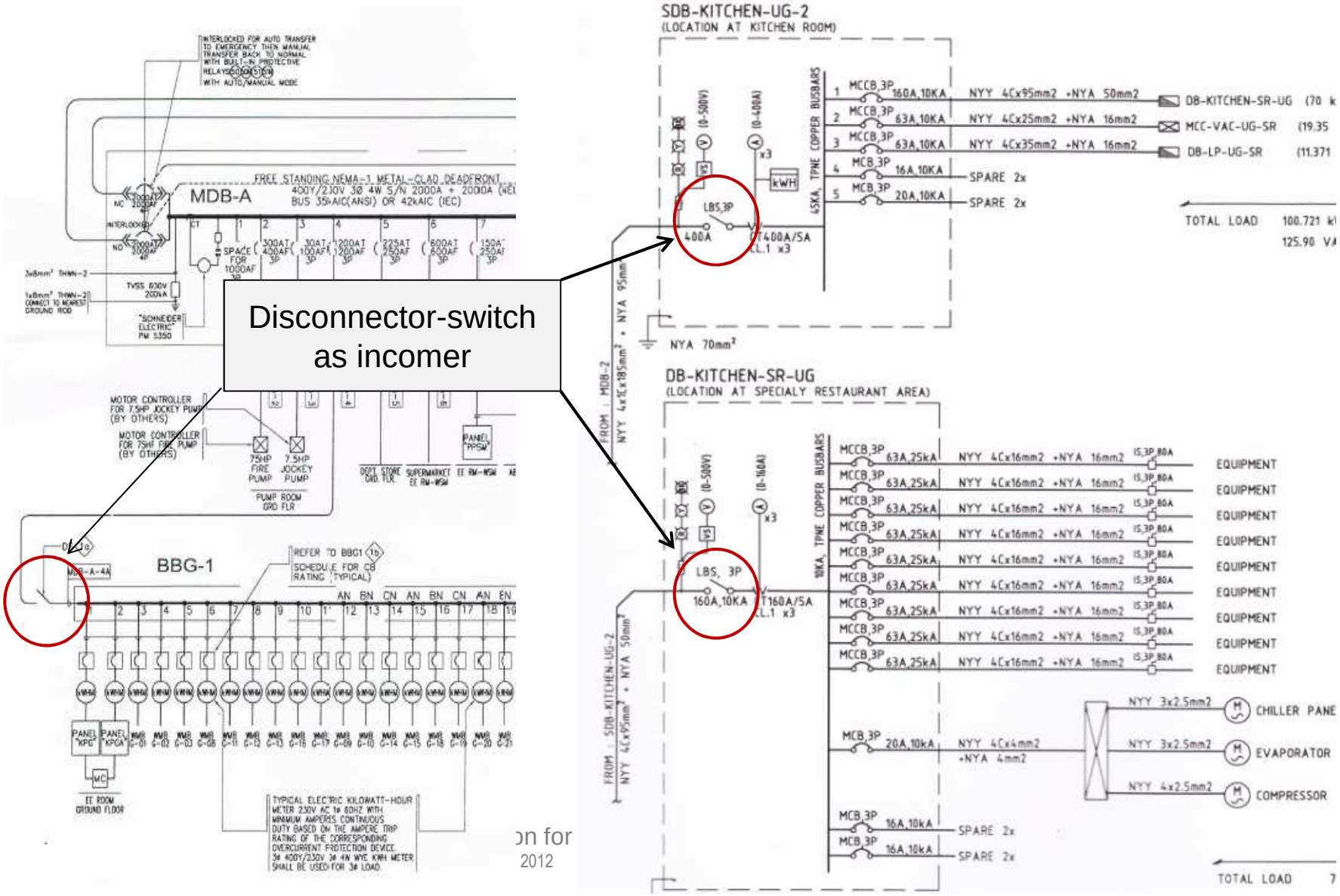

Example – ABB Promotes LBS solution

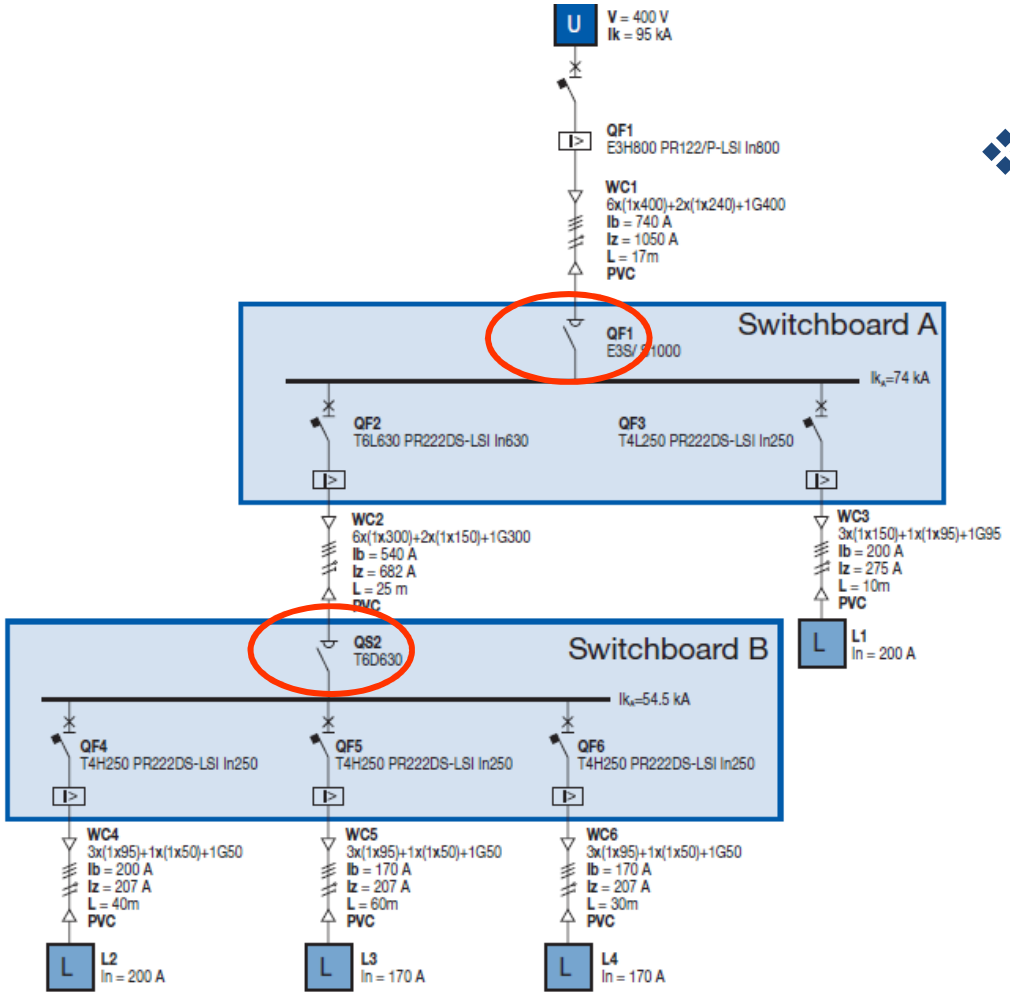

- Example ABB: extract from *ABB LV technical application document*
  - ABB has a TRUE LBS (OT) of different technology than CB

All rights reserved © Socomec 2012

socomec
Innovative Power Solutions

Example – Schneider Electric Promotes LBS Solution

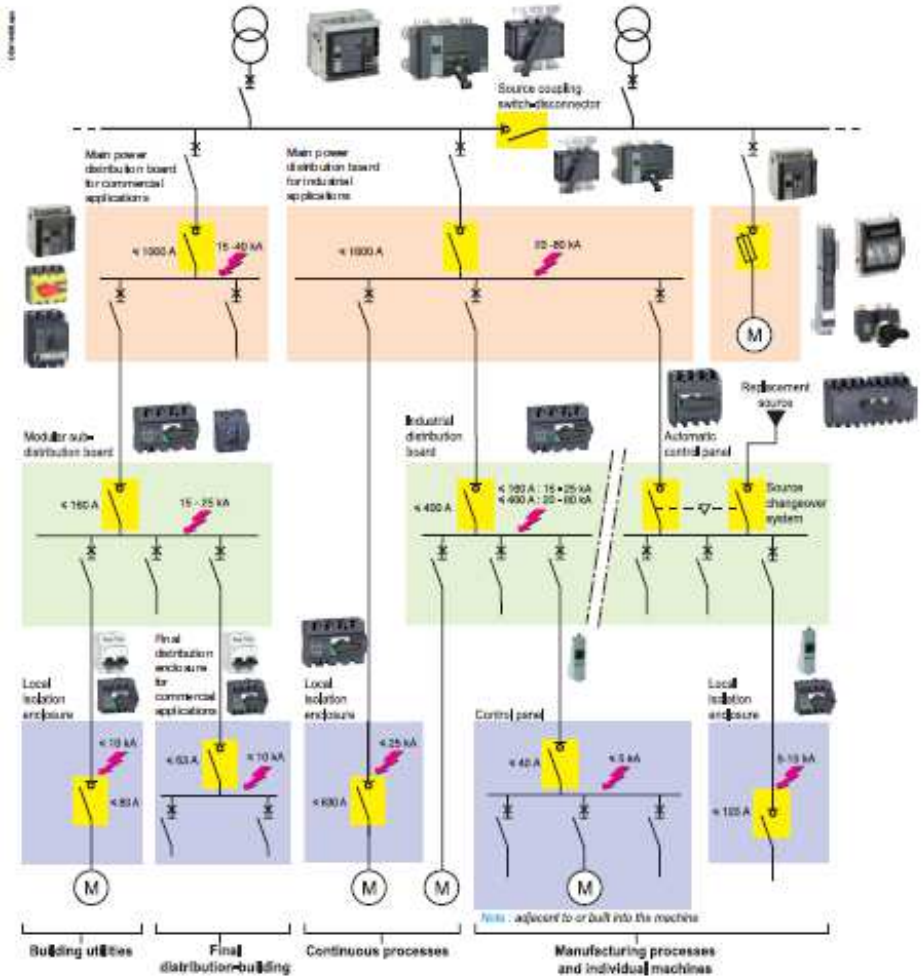

- Schneider Electric Interpact (INS) is true LBS which is different from CB technology

All rights reserved © Socomec 2012

socomec
Innovative Power Solutions

What should I remember?

- **A true LBS as SWBD incomers fully comply to IEC 60364 on isolation and switching, protection and it is cost efficient**
- CB as incomer does not comply to IEC 60364
- Many countries already implemented it for years

All rights reserved © Socomec 2012



socomec
Innovative Power Solutions



Appendix

All rights reserved © Socomec 2012

socomec
Innovative Power Solutions

Where this habit comes from ?

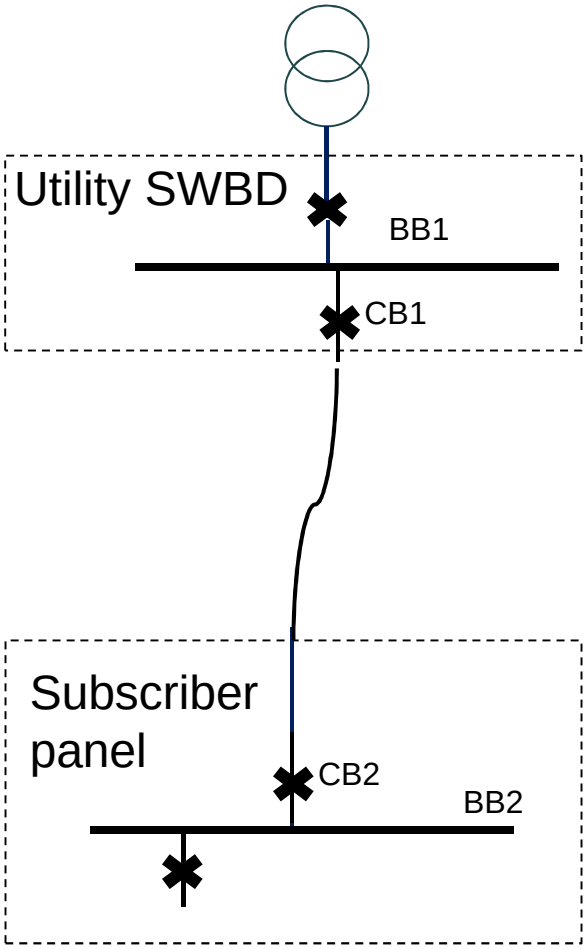

- From the Public Distribution scheme:
  - public distribution local standards ➔ put a CB as incomer of the subscriber panel.
  - To allow a tripping on power above the utility contract.
  - Or to allow a tripping on earth leakage in the subscriber panel.
  - Those reasons don't apply in private facilities
- From the market habits:
  - Specification push of CBs "947-3 compliant"…
  - One stop shopping for PnB.
  - "not so severe" issue… Not more & not less than any protection issue in a panel. Why ignoring this one?

All rights reserved © Socomec 2012

socomec
Innovative Power Solutions

Sub Switchboard incomer – PROs & CONs

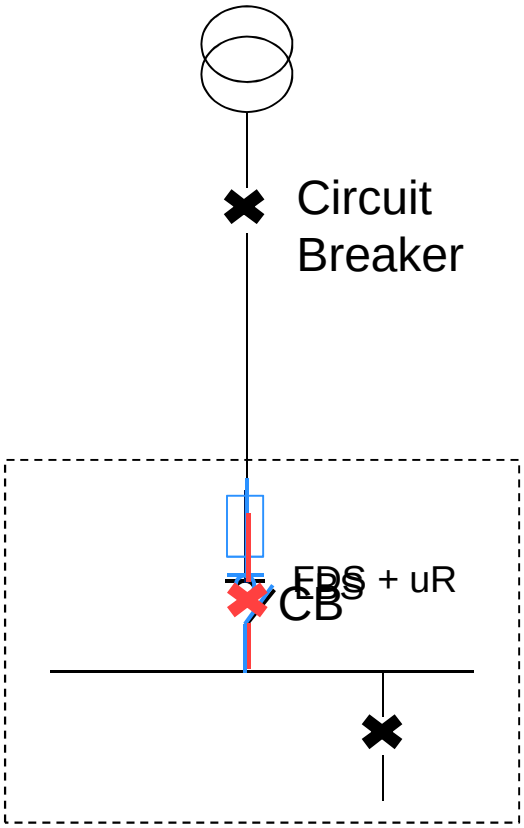

FDS: NO conflict, better protection, better disconnection, external handle, cost

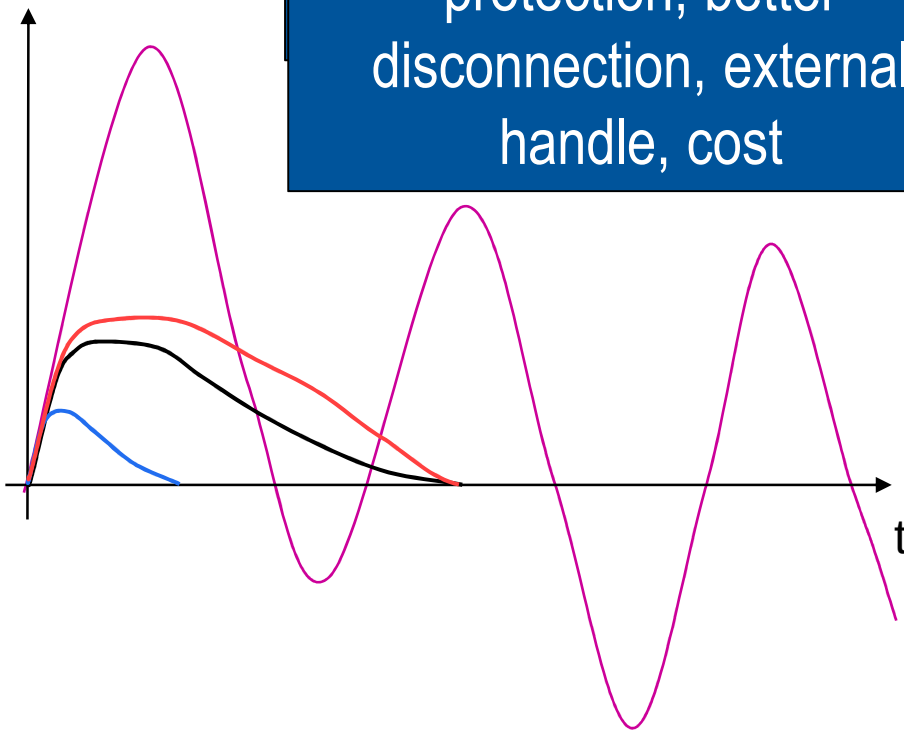

All rights reserved © Socomec 2012

IEC 60947-2 Appendix A - 2 CB N & N

- 2 identical CBs have the same curve beyond IB

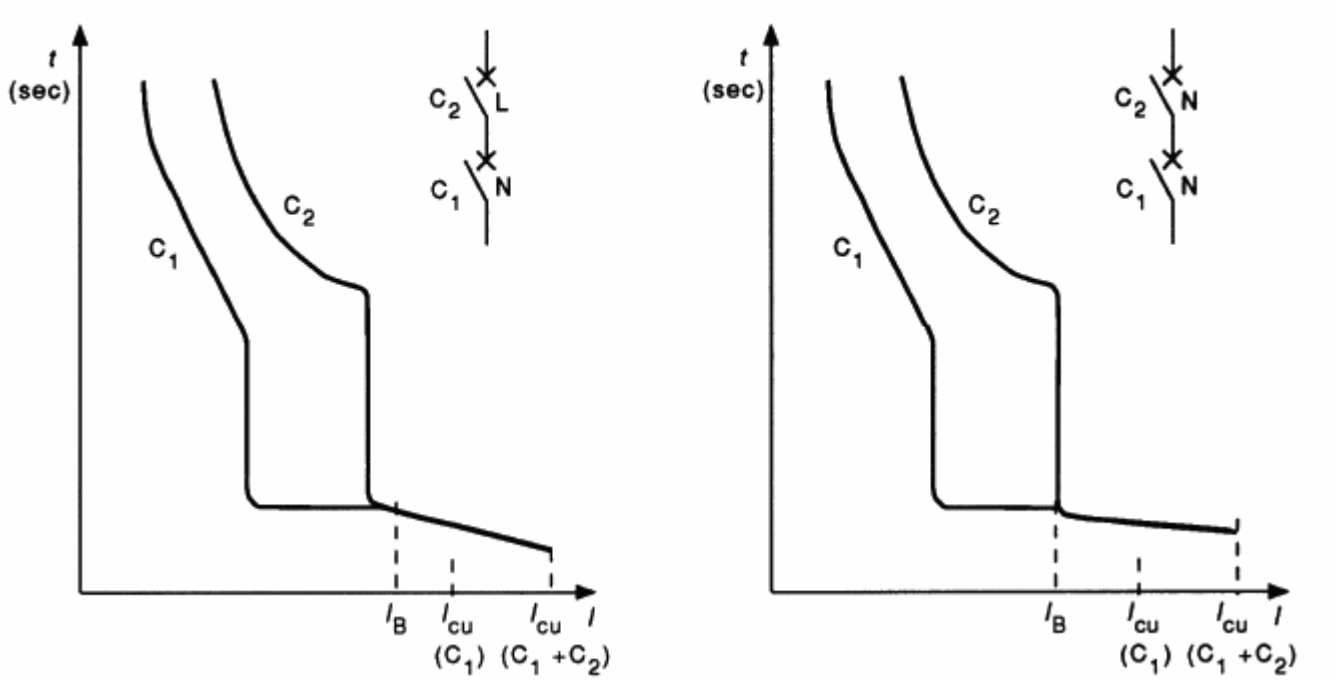

All rights reserved © Socomec 2012

socomec
Innovative Power Solutions

IEC 60947-2 Appendix A - 2 CB N & N

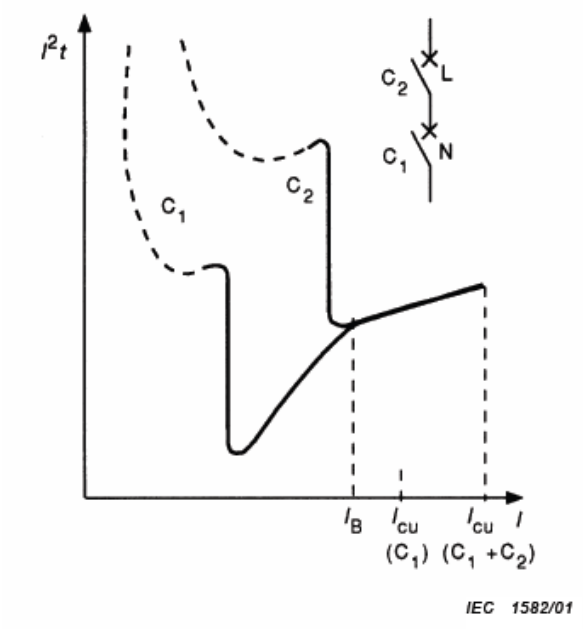

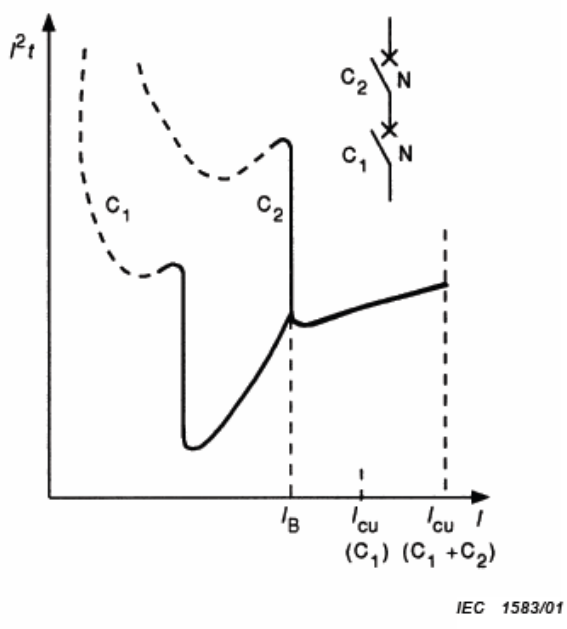

C_1 = Non current-limiting circuit-breaker (N)

C_2 = Current-limiting circuit breaker (L)

Figure A.4

C_1, C_2 = Non current-limiting circuit-breaker (N)

I_B = Take-over current

NOTE 1 Where applicable, restoration of supply by C_2 occurs.

NOTE 2 I_{cu} (C_1 + C_2) ≤ I_{cu} (C_2)

NOTE 3 For values of $I > I_B$, the curve is that of the association (shown in bold) for which data must be obtained by tests.

Figure A.5

Tests must be done beyond IB

All rights reserved © Socomec 2012

socomec
Innovative Power Solutions

Isolation and switching

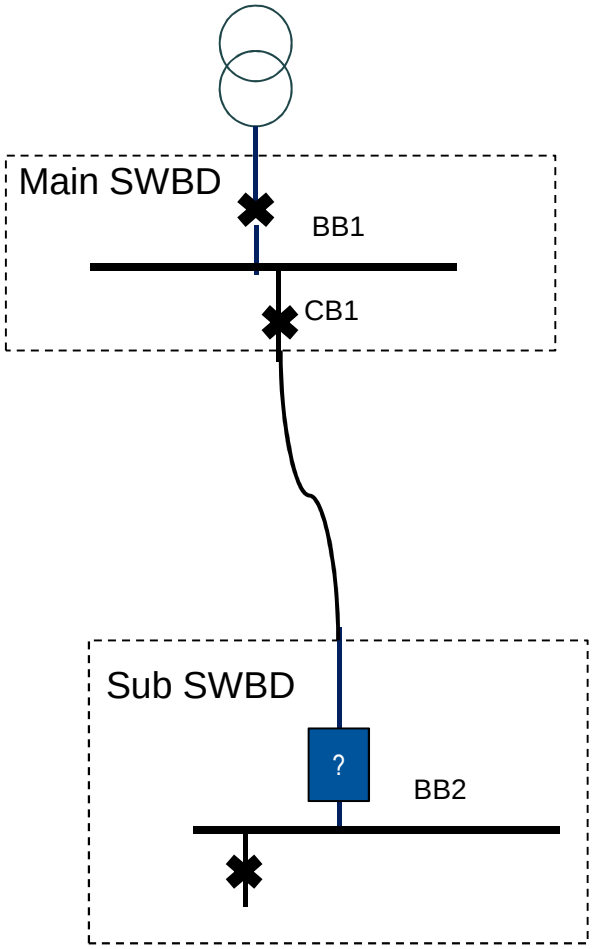

132.10 Disconnecting devices

Disconnecting devices shall be provided so as to permit switching and/or isolation of the electrical installation, circuits or individual items of apparatus as required for operation, inspection and fault detection, testing, maintenance and repair.

536.2.1 General

536.2.1.1 (462.1) Every circuit shall be capable of being isolated from each of the live supply conductors, except as detailed in 536.1.2 above.

Provisions may be made for isolation of a group of circuits by a common means, if the service conditions allow this.

536.2.1.2 (462.2) Suitable means shall be provided to prevent any equipment from being unintentionally energized.

NOTE Such precautions may include one or more of the following measures:

- padlocking;
- warning notices;
- location within a lockable space or enclosure.

Short-circuiting and earthing may be used as a supplementary measure.

All rights reserved © Socomec 2012

socomec
Innovative Power Solutions

Optimization: From LBS to ATS …

Need: 1 Tfo,
2 « Load centers »

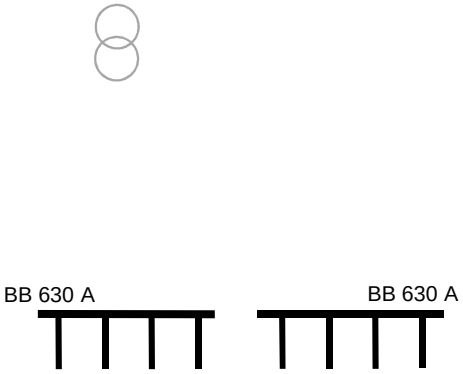

Which SLD?

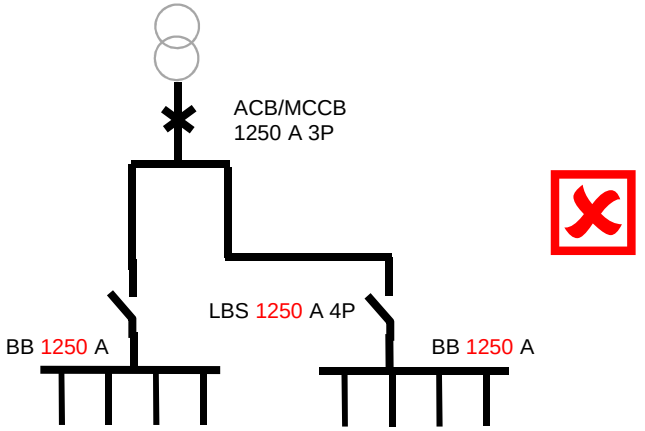

Discrimination
Limitation
Selectivity
➔
Copper &
Panel reduction
➔
Cost & CoS efficient

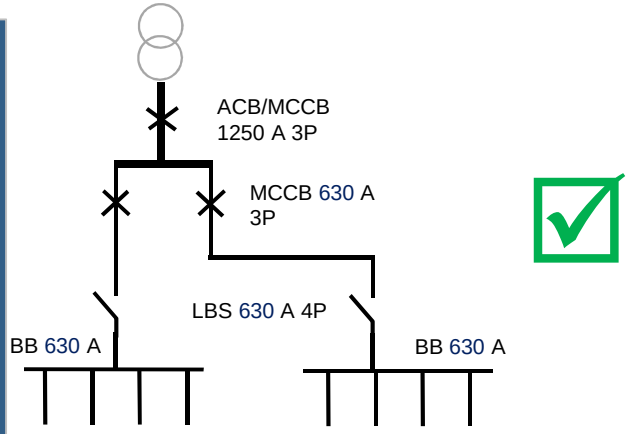

All rights reserved © Socomec 2012

socomec
Innovative Power Solutions

Optimization: From LBS to ATS …

Need: 1 Tfo,
2 « Load centers »

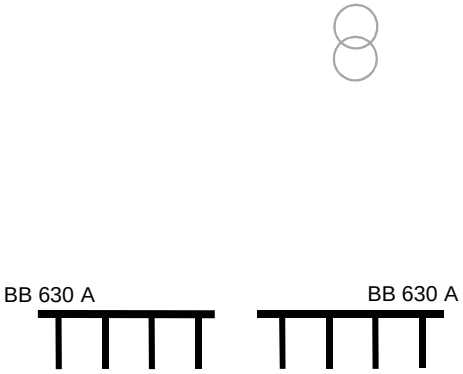

Same story!

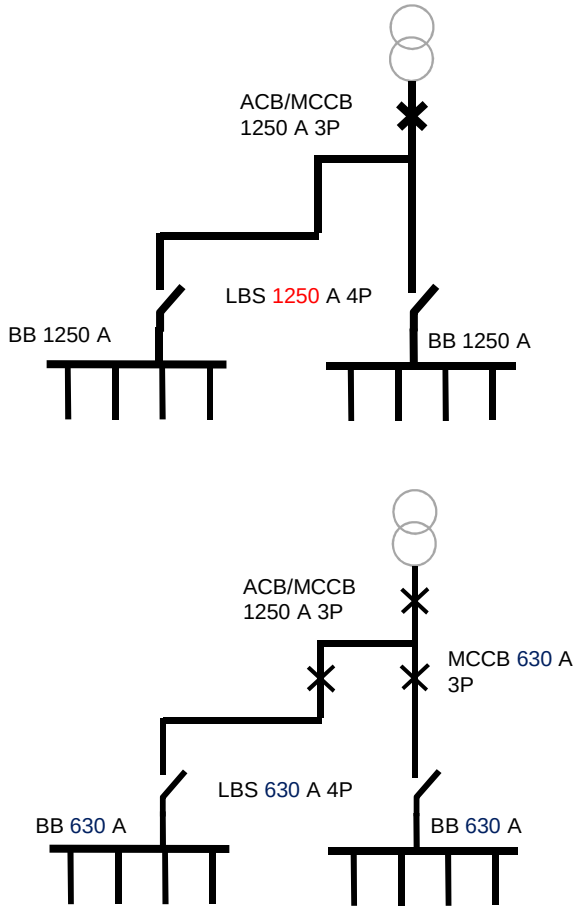

All rights reserved © Socomec 2012

Optimization: From LBS to ATS …

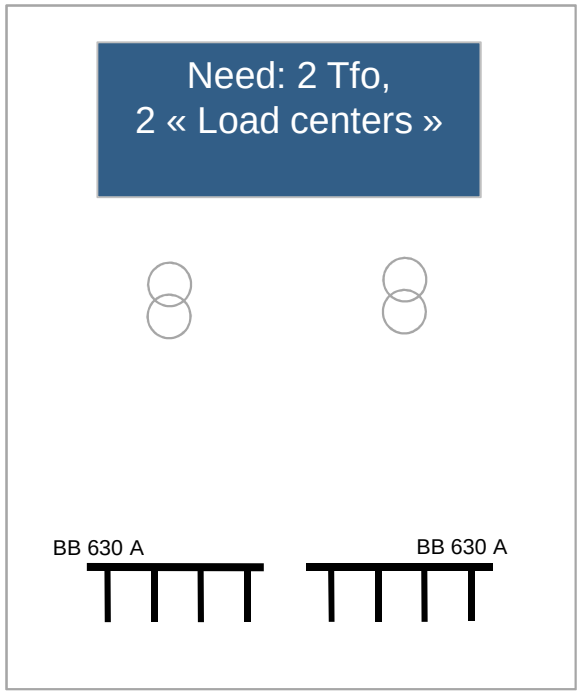

Let's use the 2 optimized SLD



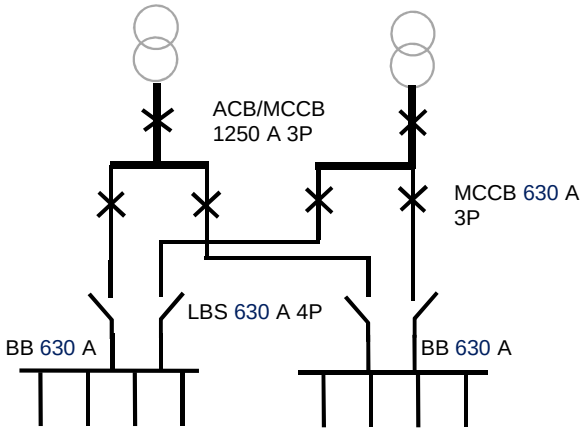

All rights reserved © Socomec 2012

socomec
Innovative Power Solutions

Optimization: From LBS to ATS …

Need: 2 Tfo,
2 « Load centers »

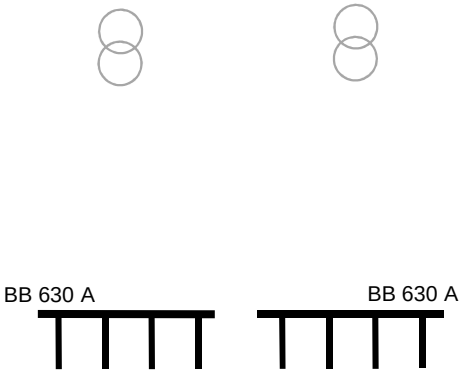

Let's make it automatic

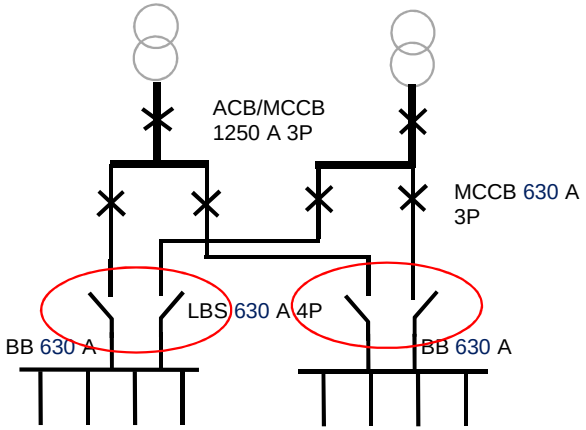

2 LBS + interlocking + motorization + control = ATS …!

All rights reserved © Socomec 2012

socomec
Innovative Power Solutions

Optimization: From LBS to ATS …

Need: 2 Tfo,
2 « Load centers »

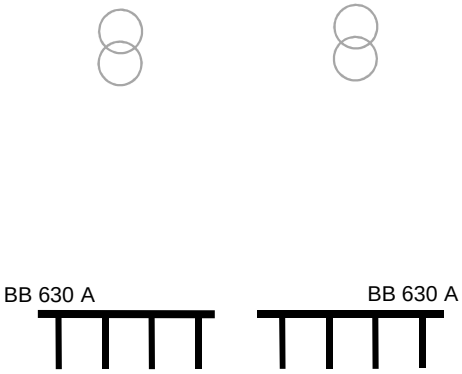

Optimized schematic

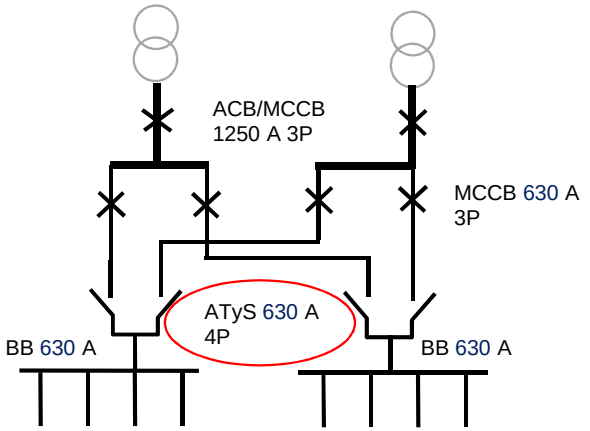

A Transfer SWITCH allows to optimize SLD.
CB doesn't

All rights reserved © Socomec 2012

Different utilization category for different type of load

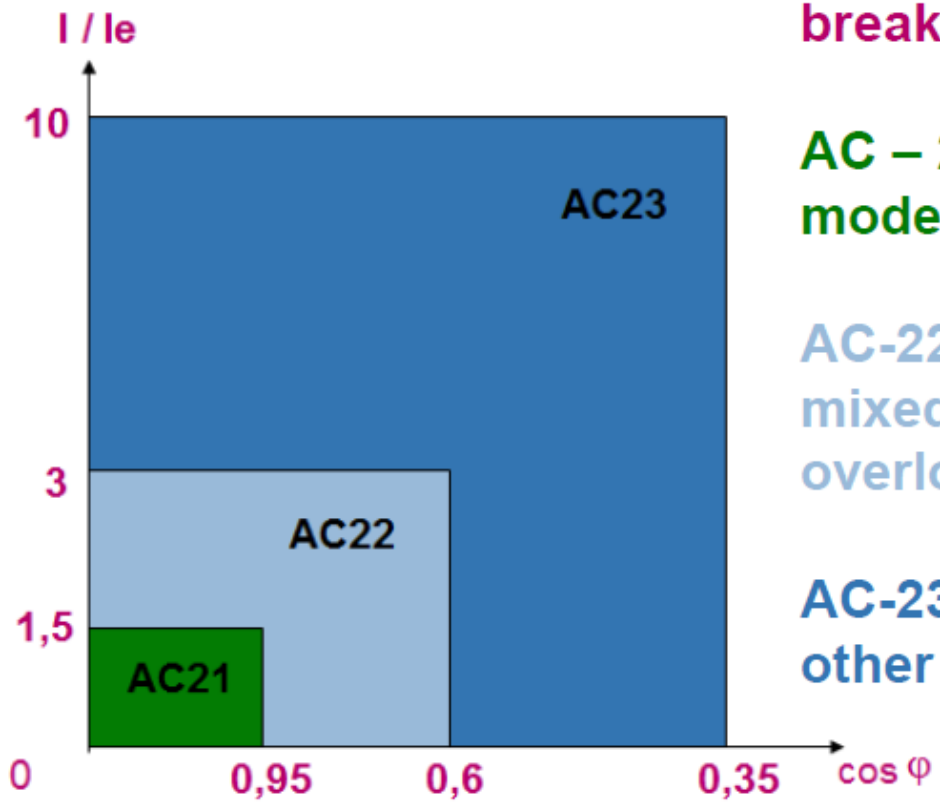

AC-20 Off-load making and breaking

AC – 21 Resistive loads including moderate overloads

AC-22 Inductive and resistive mixed loads including moderate overloads.

AC-23 Loads made of motors or other highly inductive loads

IEC 60364
Isolation and switching

132.10 Disconnecting devices

Disconnecting devices shall be provided so as to permit disconnection of the electrical installation, circuits or individual items of apparatus as required for maintenance, testing, fault detection or repair.

536 (46) Isolation and switching

536.0 (460) Introduction

This clause deals with non-automatic local and remote isolation and switching measures which prevent or remove dangers associated with electrical installations or electrically powered equipment and machines.

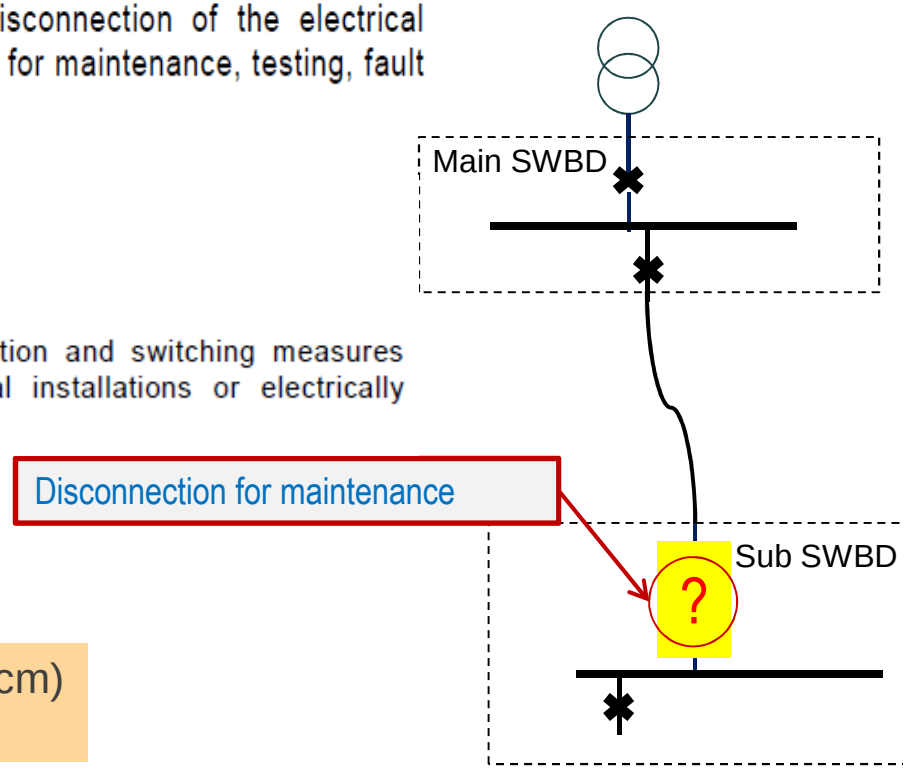

- Switch disconnector to IEC 947-3 (Icw, Icm)
- Circuit Breaker to IEC 947-2 (Icu, Ics)

537-02-07 Provision shall be made for securing an off-load isolation device against inadvertent and unauthorised operation.

All rights reserved © Socomec 2012

IEC 60364
Device for Isolation and Switching

536.2.2.2 Devices for isolation shall comply with the following two conditions:

a) withstand in the new, clean and dry condition, when in the open position, across the terminals of each pole, the impulse voltage value given in table 53A in relation to the nominal voltage of the installation.

b) have a leakage current across open poles not exceeding:
   - 0,5 mA per pole in the new, clean and dry condition, and
   - 6 mA per pole at the end of the conventional service life of the device as determined in the relevant standard,

536.2.2.3 (537.2.1.2) The isolating distance between open contacts of the device shall be visible or be clearly and reliably indicated by "off" or "open" marking. Such indication shall only occur when the isolating distance between open contacts on each pole of the device has been attained.

NOTE The marking required by this subclause may be achieved by the use of the symbols "O" and "I" to indicate the open and closed positions respectively.





Device for Isolation as per IEC 947-3
- Rated making and breaking capacities (AC 21,22,23)
- Leakage current measurement
- Strength of actuator mechanism (3F)

All rights reserved © Socomec 2012

socomec
Innovative Power Solutions

IEC 60364
Position of Protective Devices

433.2 (473.1.1) Position of devices for overload protection

433.2.1 (473.1.1.1) A device ensuring protection against overload shall be placed at the point where a change, such as a change in cross-sectional area, nature, method of installation or in constitution, causes a reduction in the value of current-carrying capacity of the conductors, except where 433.2.2 and 433.3 apply.

434.2 (473.2.1) Position of devices for short-circuit protection

A device ensuring protection against short-circuit shall be placed at the point where a reduction in the cross-sectional area of the conductors or another change causes a change to the current-carrying capacity of the conductors, except where 434.2.1, 434.2.2 or 434.3 apply.

All rights reserved © Socomec 2012

socomec
Innovative Power Solutions

IEC 60364
Position of Protective Devices

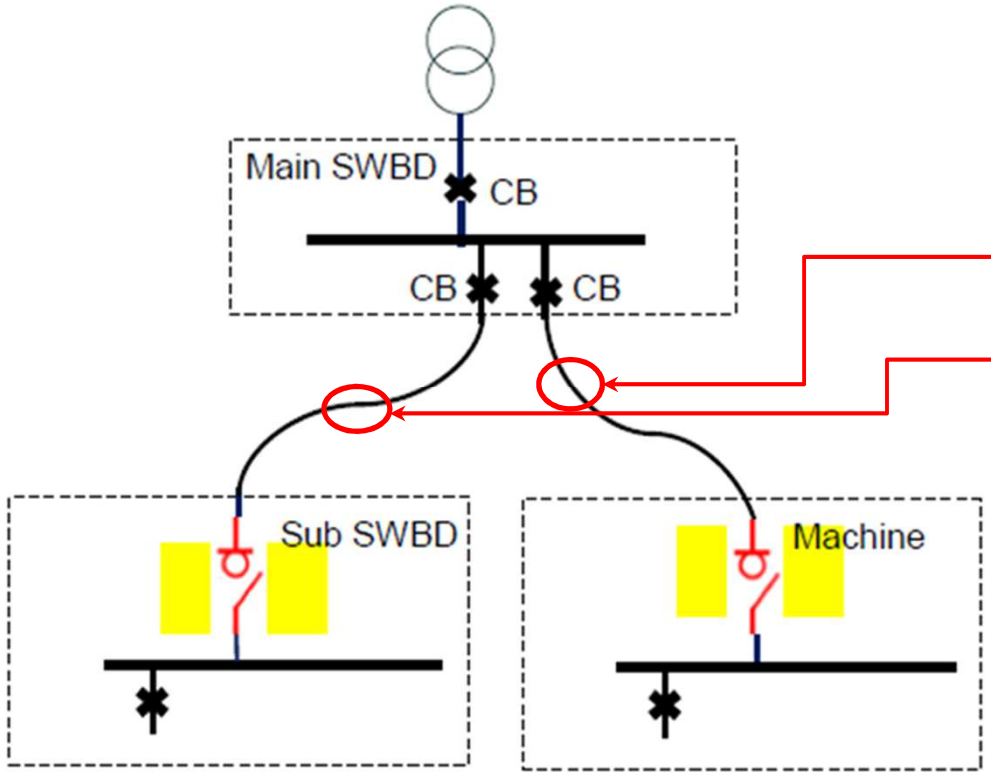

No change in cable CSA
- > No CB required

All rights reserved © Socomec 2012

socomec
Innovative Power Solutions

IEC 60364
Discrimination

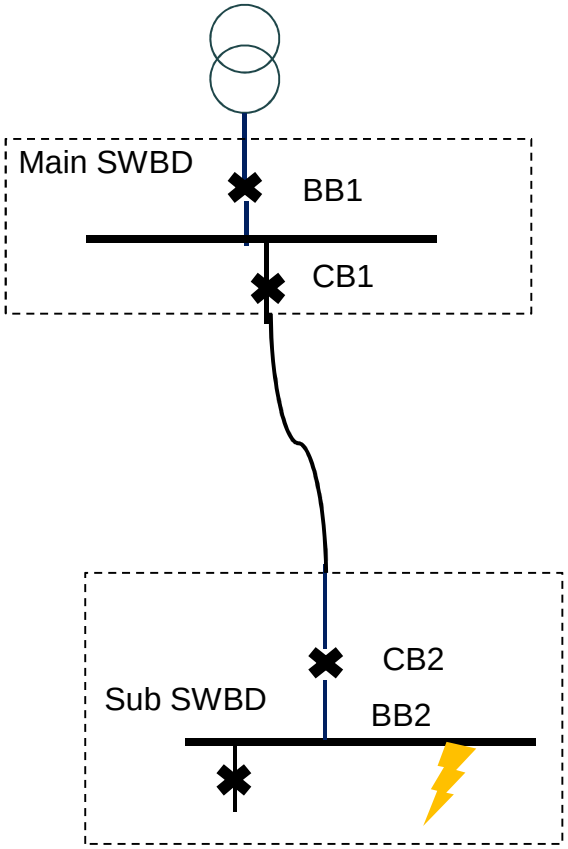

- Fault at BB2, Which CB will trip ?

All rights reserved © Socomec 2012

IEC 60364 Discrimination

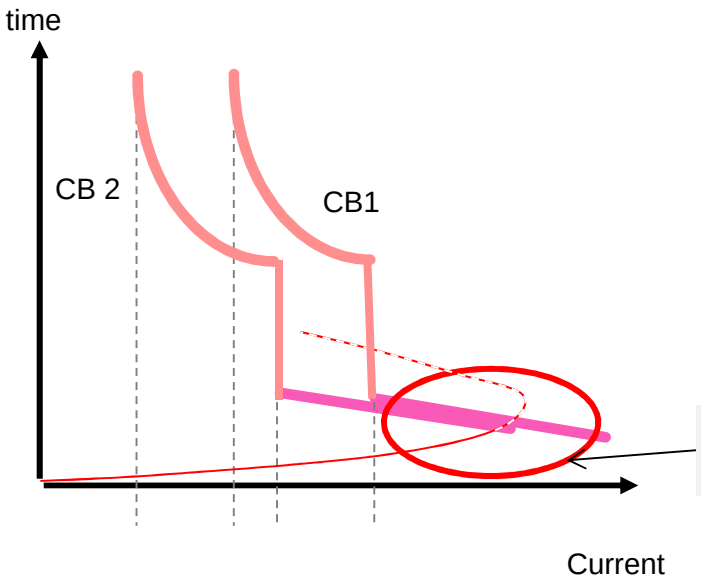

Exactly the same curves

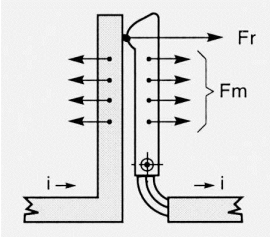

SAME contact system!

- Truth is, we cannot predict which CB will trip first
  - Both CB curves are strictly identical in the S/C area (same contact system).
- Setting the tripping parameters in case of overload or short delay is useless
  - As no fault will occur in the region of the settings.

All rights reserved © Socomec 2012

socomec
Innovative Power Solutions

IEC 60364
Discrimination

- with 2 CBs or more, the Designer responsibility is at stake: no available limitation curve.

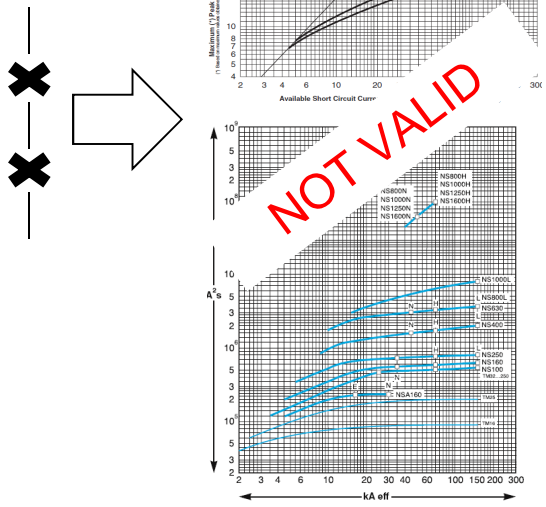

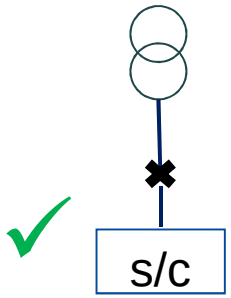

➔Max limitation, min let through energy

➔ Curves are OK

?

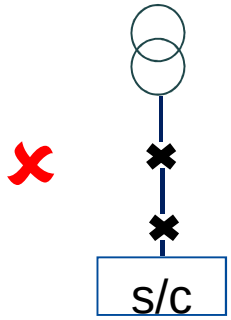

➔ More energy in the BB

➔ No curve

All rights reserved © Socomec 2012

socomec
Innovative Power Solutions

Additional Solutions

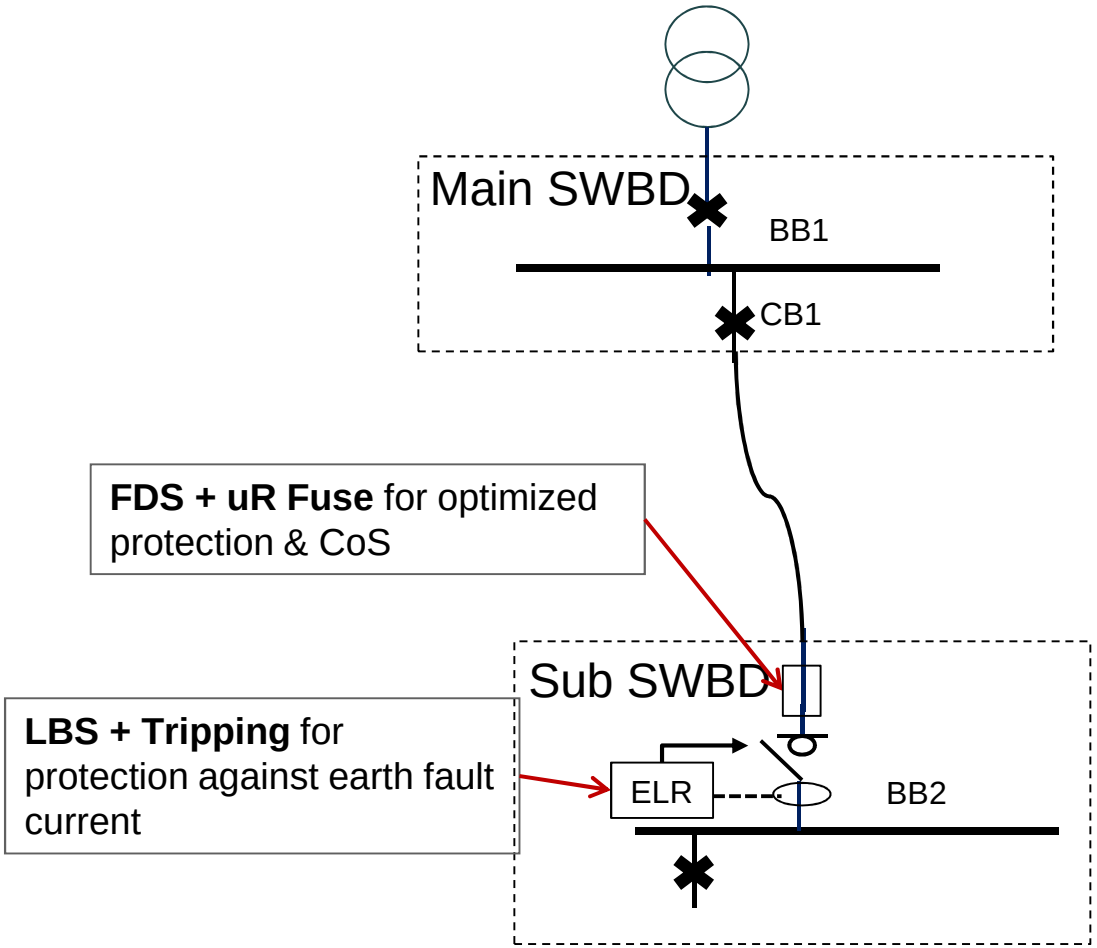

FDS + uR Fuse for optimized protection & CoS

LBS + Tripping for protection against earth fault current

LBS / FDS + tripping: for ELC detection

FDS + uR Fuse: best CoS + protection

- ❑ uR fuse for avoiding conflict on s/c on the BB (very low I^2t)
- ❑ uR fuse doesn't blow on O/L
- ❑ Fuserbloc

All rights reserved © Socomec 2012

socomec
Innovative Power Solutions

IEC 60364 – Padlocking is Compulsory

Arc flash video

536.2.2.5 (537.2.2) Devices for isolation shall be designed and/or installed so as to prevent unintentional closure.

NOTE Such closure might be caused for example by shocks and vibrations.

536.2.2.6 (537.2.3) Provision shall be made for securing off-load isolating devices against inadvertent and unauthorized opening.

NOTE This may be achieved by locating the device in a lockable space or enclosure or by padlocking.





- **CB requires ACCESSORY for Padlocking**
- **LBS - Padlocking is a standard and NOT an accessory**

All rights reserved © Socomec 2012

Product Service Life

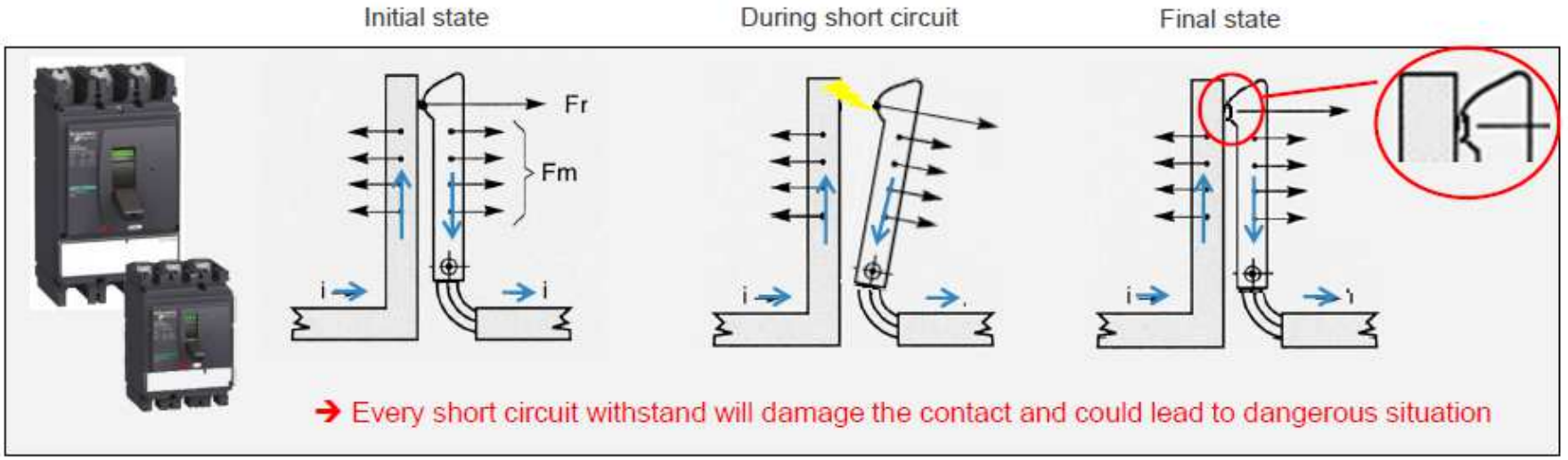

→ Every short circuit withstand will damage the contact and could lead to dangerous situation

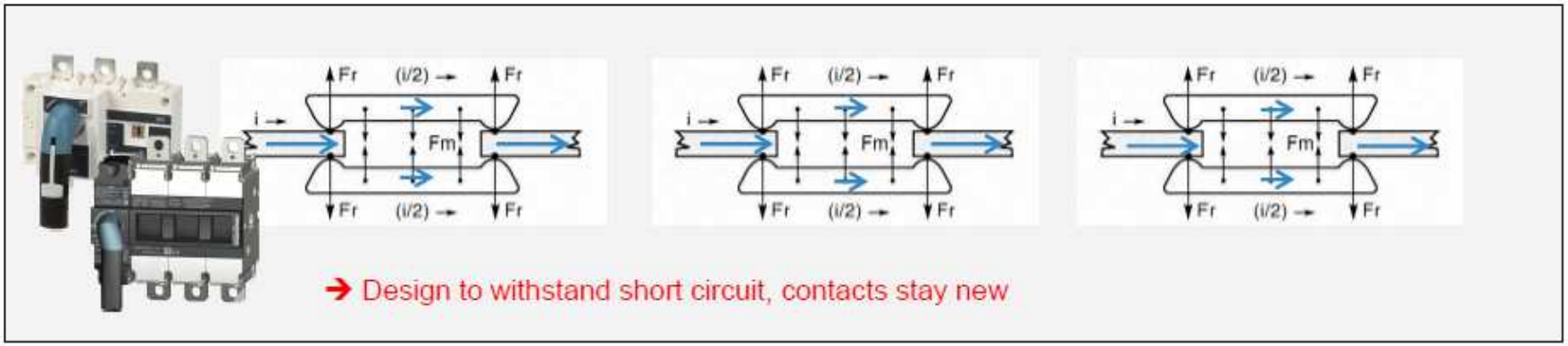

→ Design to withstand short circuit, contacts stay new

→ This is the explanation for the low value of Icw [400A: **20**kA Inosys vs **7**kA NSX]

Recommended maintenance program

Periodic inspections required

Interval	Operations	Procedure
Each year	■ Open and close the device locally and remotely, successively using the various auxiliaries	□ see pages 10 and 11.
	■ Test the operating sequences	□ see page 8.
	■ Test the control unit using the mini test kit.	□ see the user manual of the control unit.
Every two years or when the control-unit maintenance indicator reaches 100	■ Check the arc chutes	□ see page 43
	■ Check the main contacts	□ see page 43
	■ Check the tightness of connections	□ see the device installation manual
	■ Check the disconnecting-contact clusters	□ see page 44

Parts requiring replacement, depending on the number of operating cycles.

The following parts must be replaced periodically to lengthen the service life of the device (maximum number of operating cycles).

Part	Intervening entity	Description or procedure
Arc chutes	■ User.	□ see page 43.
Main contacts	■ Inspection: user ■ Replacement: Schneider After Sales Support.	□ see page 43.
MCH gear motor	■ User.	□ see page 9.
Mechanical interlocks	■ User.	
Connecting-rod springs	■ Schneider After Sales Support.	
MX/MN/XF	■ User.	□ see page 10, 11.

Before undertaking any maintenance work, de-energise the installation and fit locks or warnings in compliance with all applicable safety standards.

Arc chutes

- Remove the fixing screws:
- types N1, H1 and H2 < NW 40: two screws
- types H1 and H2 > NW 40b, type H3: three screws
- type L1: four screws.



- Check the arc chutes:
- chamber not cracked
- separators not corroded.

If necessary, replace the arc chutes.

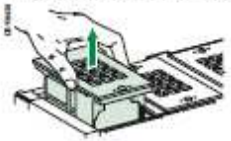



If the control unit has a maintenance indicator, there is no need to systematically check the contacts.

If the contacts are worn, have the concerned poles replaced by the Schneider Service centre.

Wear of main contacts

- Remove the arc chutes.
- Close the device and check the contacts.

Note: It is normal to see variations of the wear indication between the poles of a single device that is new or used. A new device does not have a pole in the indication area of contacts worn.

Type A

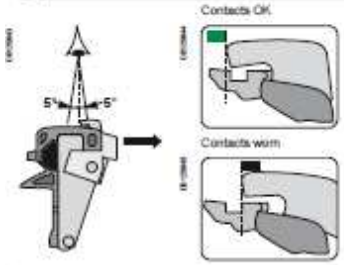

NW	08-40	NA, HA, H1, H2, HA10, H10, NAVY CEI
NW	08-20	N1 CEI
NW	20-40	H3 CEI
NW	10-40	NDC, HDC
NW	08-20	N UL
NW	08-30	H UL
NW	08-40	H2, H3 ANSI
NW	40	EARTHING SWITCH

Type B

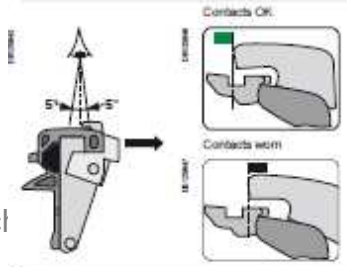

NW	40b-63	H1, H2, NA, HA CEI
NW	08-20	L1 CEI
NW	50-60	L UL
NW	08-60	L1 ANSI
NW	08-40	H1 ANSI
NW	10-40	HADC

Maintenance operations

Disconnecting-contact clusters

- Grease the contacts using the grease listed on page 45, supplied by Schneider Electric
- Check the contacts as follows:
- Open the circuit breaker
- De-energise the busbars
- Disconnect the circuit breaker
- Remove the circuit breaker
- Check the contact fingers (no sign of copper should be visible)

Replace any worn clusters.

- The position of the clusters must correspond to the table below.

Rating / Type	NW08	NW10 NW12	NW16	NW20	NW25	NW32	NW40	NW40b NW50	NW63
N1	layout n° 1 2 clusters/pole								
H1	layout n° 2 4 clusters/pole			layout n° 3 8 clusters/pole		layout n° 4 12 clusters/pole	layout n° 5 14 clusters/pole	layout n° 4 24 clusters/pole	
H2									
H3									
L1	layout n° 3 8 clusters/pole			layout n° 5 14 clusters/pole					
corrosion protection	layout 2' 4 "GOLDEN" clusters/pole		layout 3' 8 "GOLDEN" clusters/pole		layout 5 14 "GOLDEN" clusters/pole			layout 4 24 "GOLDEN" clusters/pole	

layout n° 1

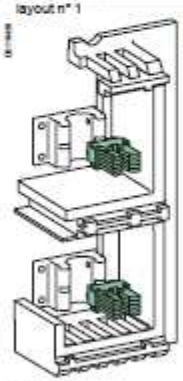

layout n° 2

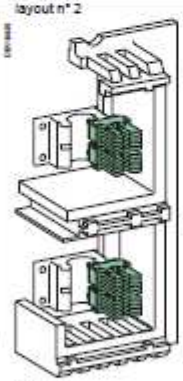

layout n° 3

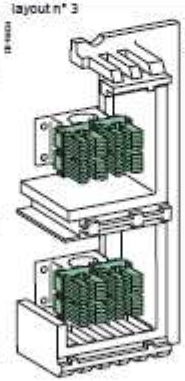

layout n° 4

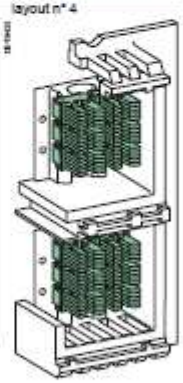

layout n° 5



layout 2'

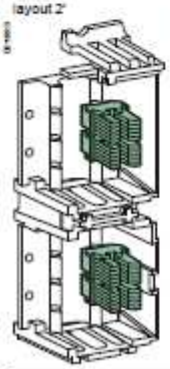

layout 3'

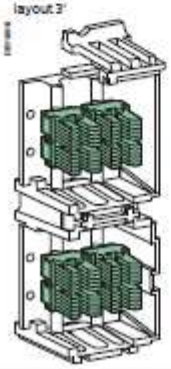

Ordering replacement parts



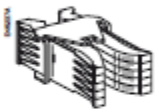

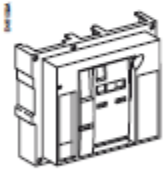





Electrical accessories

The electrical accessories that may require replacement are the following:

- MCH gear motor
- MX opening release(s)
- XF closing release
- MN undervoltage release.

See pages 33 and 34 in the "Auxiliaries for remote operation" section for their characteristics.

Arc chutes

- 1 arc chute:
  - NW type N1
    NW08 to NW40 types H1 and H2
  - NW40b to NW63 types H1 and H2
    NW type H3
  - NW type L1.
- NW08 to NW40: one chute per pole
  NW40b to NW63: two chutes per pole.

Disconnecting-contact clusters for standard NW

- 1 cluster.
- Number per circuit breaker, see table page 44.

Grease for disconnecting-contact clusters

- 1 can for standard NW.
- 1 can for NW with corrosion protection.

Front

- 1 front for 3- or 4-pole devices.
- 1 per device.

Charging handle

- 1 handle per device.

Crank

- 1 crank per device.

Troubleshooting ACB

Problem	Probable causes	Solutions
Circuit breaker cannot be closed locally or remotely	■ Circuit breaker padlocked or keylocked in the "open" position	□ disable the locking fonction
	■ Circuit breaker interlocked mechanically in a source changeover system	□ check the position of the other circuit breaker in the changeover system □ modify the situation to release the interlock
	■ Circuit breaker not completely connected	□ terminate racking in (connection) of the circuit breaker
	■ The reset button signalling a fault trip has not been reset	□ clear the fault □ push the reset button on the front of the circuit breaker
	■ Stored energy mechanism not charged	□ charge the mechanism manually □ if it is equipped with a an MCH gear motor, check the supply of power to the motor. If the problem persists, replace the gear motor (MCH)
	■ MX opening shunt release permanently supplied with power	□ there is an opening order. Determine the origin of the order. The order must be cancelled before the circuit breaker can be closed
	■ MN undervoltage release not supplied with power	□ there is an opening order. Determine the origin of the order. □ check the voltage and the supply circuit (U > 0.85 Un). If the problem persists, replace the release
	■ XF closing release continuously supplied with power, but circuit breaker not "ready to close" (XF not wired in series with PF contact)	□ cut the supply of power to the XF closing release, then send the closing order again via the XF, but only if the circuit breaker is "ready to close"
	■ Permanent trip order in the presence of a Micrologic P or H control unit with minimum voltage and minimum frequency protection in Trip mode and the control unit powered	□ Disable these protection functions on the Micrologic P or H control unit
Circuit breaker cannot be closed remotely but can be opened locally using the closing pushbutton	■ Closing order not executed by the XF closing release	□ check the voltage and the supply circuit (0.85 - 1.1 Un). If the problem persists, replace the XF release
Unexpected tripping without activation of the reset button signalling a fault trip	■ MN undervoltage release supply voltage too low ■ Load-shedding order sent to the MX opening release by another device	□ check the voltage and the supply circuit (U > 0.85 Un) □ check the overall load on the distribution system □ if necessary, modify the settings of devices in the installation
	■ Unnecessary opening order from the MX opening release	□ determine the origin of the order
Unexpected tripping with activation of the reset button signalling a fault trip	a fault is present : ■ overload ■ earth fault ■ short-circuit detected by the control unit	□ determine and clear the causes of the fault □ check the condition of the circuit breaker before putting it back into service
Instantaneous opening after each attempt to close the circuit breaker with activation of the reset button signalling a fault trip	■ Thermal memory	□ see the user manual of the control unit □ press the reset button
	■ Transient overcurrent when closing	□ modify the distribution system or the control-unit settings □ check the condition of the circuit breaker before putting it back into service □ press the reset button
	■ Closing on a short-circuit	□ clear the fault □ check the condition of the circuit breaker before putting it back into service □ press the reset button

socomec
Innovative Power Solutions

Problem	Probable causes	Solutions
Circuit breaker cannot be opened remotely, but can be opened locally	■ Opening order not executed by the MX opening release	□ check the voltage and the supply circuit (0.7 - 1.1 Un). If the problem persists, replace the MX release
	■ Opening order not executed by the MN undervoltage release	□ drop in voltage insufficient or residual voltage (> 0.35 Un) across the terminals of the undervoltage release. If the problem persists, replace the MN release
Circuit breaker cannot be opened locally	■ Operating mechanism malfunction or welded contacts	□ contact a Schneider service centre
Circuit breaker cannot be reset locally but not remotely	■ Insufficient supply voltage for the MCH gear motor	□ check the voltage and the supply circuit (0.7 - 1.1 Un). If the problem persists, replace the MCH release
Nuisance tripping of the circuit breaker with activation of the reset button signalling a fault trip	■ Reset button not pushed-in completely	□ push the reset button in completely
Impossible to insert the crank in connected, test or disconnected position	■ A padlock or keylock is present on the chassis or a door interlock is present	□ disable the locking function
Impossible to turn the crank	■ The reset button has not been pressed	□ press the reset button
Circuit breaker cannot be removed from chassis	■ Circuit breaker not in disconnected position	□ turn the crank until the circuit breaker is in disconnected position and the reset button out
	■ The rails are not completely out	□ pull the rails all the way out
Circuit breaker cannot be connected (racked in)	■ Cradle/circuit breaker mismatch protection	□ check that the cradle corresponds with the circuit breaker
	■ The safety shutters are locked	□ remove the lock(s)
	■ The disconnecting-contact clusters are incorrectly positioned	□ reposition the clusters
	■ Cradle locked in disconnected position	□ disable the cradle locking function
	■ The reset button has not been pressed, preventing rotation of the crank	□ press the reset button
	■ The circuit breaker has not been sufficiently inserted in the cradle	□ insert the circuit breaker completely so that it is engaged in the racking mechanism
Circuit breaker cannot be locked in disconnected position	■ The circuit breaker is not in the right position	□ check the circuit breaker position by making sure the reset button is out
	■ The cranck is still in the cradle	□ remove the crank and store it
Circuit breaker cannot be locked in connected, test or disconnected position	■ Check that locking in any position is enabled	□ contact a Schneider service centre
	■ The circuit breaker is not in the right position	□ check the circuit breaker position by making sure the reset button is out
	■ The cranck is still in the cradle	□ remove the crank and store it
The crank cannot be inserted to connect or disconnected the circuit breaker	■ The rails are not completely in	□ push the rails all the way in
The right-hand rail (chassis alone) or the circuit breaker cannot be drawn out	■ The crank is still in the chassis	□ remove the crank and store it

mec
Innovative Power Solutions