reflex

Thinking solutions.

Product Guide 2015



We are only satisfied if you are

Reflex has set itself the goal of supporting you with well thought-out solutions. Whatever job you need doing in water supply engineering, why not put your trust in our comprehensive range of products and accompanying tailored services? We will ensure that your decision to opt for Reflex is the right one in every respect – from advice and design to installation and ongoing operation.

reflex

Thinking solutions.

Reflex's mission is embodied in the company's slogan: "Thinking solutions". Reflex's strength is to think in terms of solutions. Reflex develops ideas that help you to move forward based on decades of experience, in-depth technical understanding and intimate knowledge of the industry!

We make sure that everything fits

Heating, cooling and hot water supply systems - the demands on supply equipment are varied and complex. You'll be well-advised for every eventuality with our coordinated product ranges. Reflex can offer you the right components for each specific task – and you can be sure that they can be integrated seamlessly into the interplay of a larger overall solution. The result: well thought-out systems that simply perform better.



In this product guide, we've summarised our entire product range for you meaning you can locate all our available products, series and technical information quickly and easily. All weights given are net weights.
Reflex reserve the right to modify the details published in this document. General Sales Conditions of Reflex Winkelmann GmbH: Please consult www.reflex.de

Contents



Diaphragm and Bladder Expansion Vessels 9
For heating, chilled water and solar applications
Reflex N and NG 9
Reflex C 10
Reflex F 10
Reflex S 11
Reflex S/V 11
Reflex G 12
Accessories Reflex 13
Reflex V 14



For potable water applications 17
Refix C-DE 17
Refix DC 18-19
Refix DE 20
Refix HW 21
Refix DD 22-23
Refix DT 24
Accessories Refix



Pressurisation Systems 27-38
Compressor Controlled Systems
Reflexomat and accessories 39-48
Pump Controlled Systems
Variomat and accessories 49-58
Variomat Giga and accessories



Water Make-Up Systems & Water Treatment 61
Fillset 62-63
Fillcontrol 64
Fillsoft



Deaeration Systems & Separation Technology 67-76
Servitec 79-82
Exvoid 83-87
Exdirt 88-92
Extwin 93
Accessories Air / Dirt Separation 94
Reflex EB / LA / T



Hot Water Storage Tanks & Heat Exchangers 98
Storatherm Heat H / HF 99
Storatherm Heat H / HF..R 100
Storatherm Heat H / HF/..1 101
Storatherm Heat H / HF/..2 102
Storatherm Heat Combi HC /..1/..2 103
Accessories Storatherm Heat 104-105
Storatherm Aqua AB / AC / AF / 1 106-107
Storatherm Aqua Solar AB / AF / 2 108
Storatherm Aqua Heat Pump AH / 1 - 2 109
Storatherm Aqua Combi AC 110-111
Storatherm Aqua Load AL / R 112-114
Accessories Storatherm Aqua 116-119
Longtherm Heat Exchangers 120-121
Accessories Longtherm



124
Services 126-127
Reflex Programs
Contact

Update On New Product



Expansion Vessels

‘reflex EN’	→	Reflex C
‘refix DE Junior‘	→	Refix DC

Pressurisation Systems

‘minimat‘	→	Reflexomat Compact
‘variomat‘	→	Variomat

Water Make-Up Systems & Water Treatment

‘magcontrol‘	→	Fillcontrol Plus
‘control P‘	→	Fillcontrol Auto

Deaeration Systems & Separation Technology

‘extop‘	→	Exvoid T
‘exair‘	→	Exvoid

New Products

Reflex Control Basic / Touch / Basic S

Reflex Exferro

Reflex S/V

Hot Water Storage Tanks & Heat Exchangers

Water Heater		Storatherm Aqua
SB-SF /1	→	AB-AF /1 Aqua
SB-SF /2/2	→	AB-AF /2 Aqua Solar
LS	→	AL Aqua Load
US	→	AC Aqua Compact
WPS	→	AH Aqua Heat
VKS	→	AC Aqua Combi
Buffer Tank		Storatherm Heat
PH	→	H Basic Tank
PHF	→	H /R Tank with Flange
PHW	→	H /1 Tank with Heat Exchanger
PFH	→	HF H Basic Tank with Insulation
PFHF	→	HF /R H Basic Tank with Flange & Insulation
PFHW	→	HF /1 Basic Tank with Heat Exchanger & Insulation
PW	→	HWF Insulation Jacket
PWF	→	HWF Foil Cladding

Expansion Vessels



Expansion Vessels For Heating & Chilled Water

Heating, Chilled Water and Solar Applications

3 bar

F Diaphragm





F8-F24 litres
Diaphragm
Page 10

C Bladder



C8-C80 litres
Non-replaceable
Butyl bladder
Page 10

6 bar

N & NG Diaphragm







NG8-NG140
N200-N1000 litres
Diaphragm
Page 9

G Bladder







G100-G10000 litres
Replaceable bladder
Page 12-13

10 bar

S Diaphragm







S2-S600 litres
Diaphragm
Page 11

*S2 - S33
with bladder



S/V 18-33 litres
Diaphragm
Page 11

G Bladder







G100-G10000 litres
Replaceable bladder
Page 12-13

*16 bar / 25 bar: Optional

V Intermediate Tank













V500-V5000 litres - 6 bar/120°C
V6-V5000 litres - 10 bar/120°C
Page 14

Potable Water Applications

Bladder

DD





DD2-DD3/10 bar
DD8/25 bar
Page 21

DT











DT60-DT3000/10 bar
DT80-DT3000/16 bar
Page 22

CE



C-DE8-C-DE80
10 bar
Page 17

DE













DE2-DE5000/10 bar
DE8-DE5000/16 bar
DE8-DE3000/25 bar
Page 18-19

HW



HW25-HW100/10 bar
Page 20

Diaphragm

DC







DC25-DC600/10 bar
Page 17

WSA



0.165 litres/10 bar
Page 20

reflex

Thinking solutions.

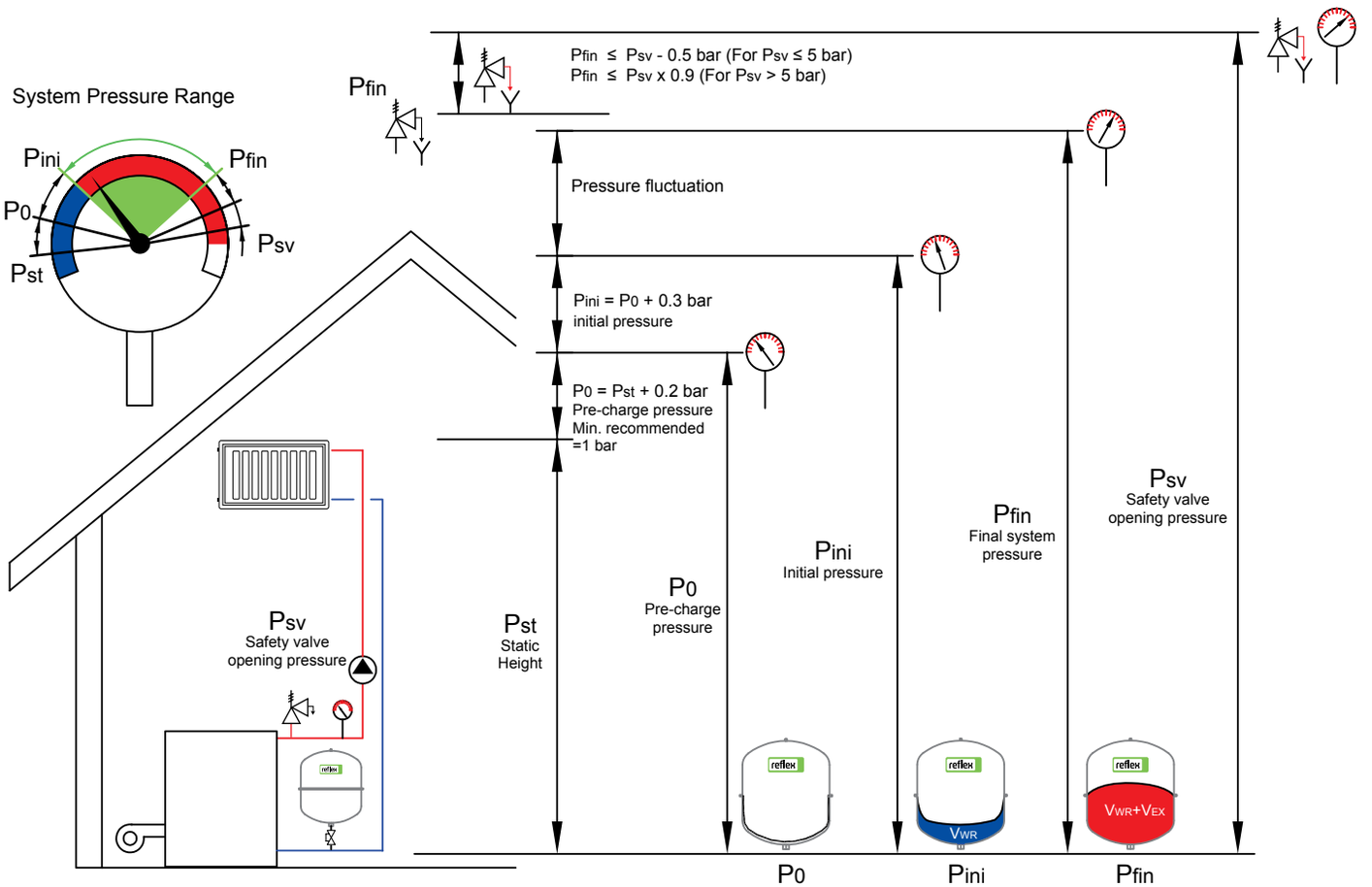

Expansion vessels do have a number of important functions to fulfil:

- To restrict the pressure fluctuation of the system within certain limits (otherwise loss of water may occur via a responding safety relief valve)
- To prevent a negative pressure at the highest points of the installation in order to avoid the intrusion of air into the piping network
- To avoid steam building or the evaporation of the system liquid, e.g. in circuits with superheated water, solar systems
- To avoid cavitation inside pumps and fittings (preventing pump damage)
- To keep a water reserve in order to avoid a pressure drop caused by occasional losses of volume, e.g. due to venting after the initial starting up of the system
- To compensate for the variations of volume due to the changes in temperature of the system liquid

$$V_{ex} = V_{sys} \times E$$

$$V_{WR} = 0{,}005$$

$$F_{acc} = \frac{P_{fin} - P_0}{P_{fin} + 1}$$

$$V_n \geq \frac{V_{ex} + V_{WR}}{F_{acc}}$$

$$P_{fin} = P_{sv} - 0{,}5 \text{ bar } (P_{sv} < 5 \text{ bar})$$

$$P_{fin} = P_{sv} - 0{,}1 \times P_{sv} \text{ bar } (P_{sv} > 5 \text{ bar})$$

V_N = Nominal volume, litres

V_{ex} = Expanded volume, litres

V_{WR} = Water reserve, litres

V_{sys} = Total water content, litres

e = Expansion coefficient (Eg.: for 90°C, e = 0,0355)

Reflex N & NG

- For heating and chilled water applications
- Threaded connections
- Non-replaceable diaphragm, according to DIN EN 13831 norm part 3, max. operating temperature 70°C
- Meets or exceeds EC norms for pressure vessels 97/23/CE
- Durable epoxy coating with attractive new colour
- Factory pre-pressurised gas chamber (Nitrogen)



8-25 litres



35-250 litres



300-1000 litres

6 bar

Type 6 bar / 120°C	Article No Grey	Article No White	Material Group	PU	Weight kg	Ø D mm	H mm	h mm	A	Pre-charge pressure bar
NG 8	8230100	7230107	10	96	1.6	206	285	-	R ¾	1.5
NG 12	8240100	7240107	10	72	2.4	280	275	-	R ¾	1.5
NG 18	8250100	7250107	10	56	3.4	280	345	-	R ¾	1.5
NG 25	8260100	7260107	10	42	4.2	280	465	130	R ¾	1.5
NG 35	8270100	7270107	10	24	4.8	354	460	175	R ¾	1.5
NG 50	8001011	7001100	11	24	5.7	409	493	175	R ¾	1.5
NG 80	8001211	7001300	11	12	8.7	480	565	175	R 1	1.5
NG 100	8001411	7001500	11	10	11.4	480	670	175	R 1	1.5
NG 140	8001611	7001700	11	8	13.1	480	912	175	R 1	1.5
N 200	8213300	-	18	4	22.0	634	758	205	R 1	1.5
N 250	8214300	-	18	4	24.7	634	888	205	R 1	1.5
N 300	8215300	-	18	-	27.0	634	1092	235	R 1	1.5
N 400	8218000	-	18	-	47.0	740	1102	245	R 1	1.5
N 500	8218300	-	18	-	52.0	740	1312	245	R 1	1.5
N 600	8218400	-	18	-	66.0	740	1531	245	R 1	1.5
N 800	8218500	-	18	-	96.0	740	1996	245	R 1	1.5
N 1000	8218600	-	18	-	118.0	740	2406	245	R 1	1.5

Vn Nominal Volume [litres]

Reflex Wall hung holder for vessels 8 - 25 litres

- Bracket with tightening strap for vertical mounting



	Article No	Product Group	Qpc*
8 - 25 l	7611000	75	36

* Quantity per carton

- Holder with multiple connections

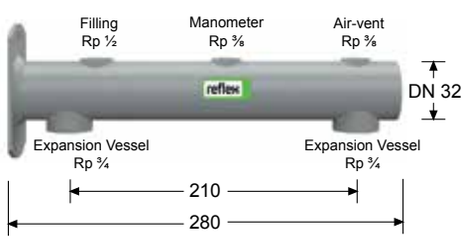

	Article No	Product Group
8 - 25 l	7612000	75

Reflex Cap Valve - Lockshield

- Shut-off device for inspection and removal of expansion vessels
- Including drain valve
- According to DIN EN 12828
- PN 10 / 120°C



	Article No	Product Group
R ¾ x ¾	7613000	84
R 1 x 1	7613100	84

R ¾ x ¾

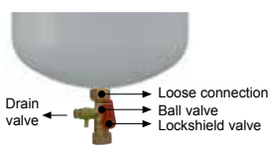

R 1 x 1

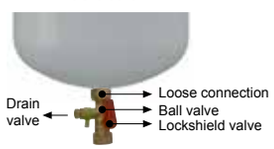

Expansion Vessels For Heating & Chilled Water

Reflex C

- For heating and chilled water applications
- Suitable for anti-frost mixture up to 50%
- Provided with suspension bracket for easy installation
- Butyl bladder according to DIN EN 13831 norm part 3, max. operating temperature 70°C
- Meets or exceeds EC norms for pressure vessels 97/23/EC
- Durable epoxy coating with attractive new colour
- Factory pre-pressurised gas chamber (Nitrogen)
- Reflex EN, now with it's new name Reflex C

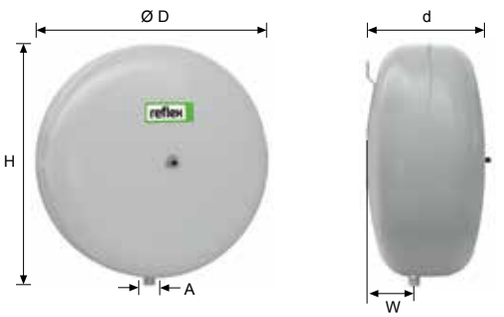

CE

3 bar

Type 3 bar / 120°C	Article No Grey	Material Group	PU	Weight kg	Ø D mm	H mm	d mm	W mm	A	Pre-charge pressure bar
C 8	8280000	17	96	2.8	280	287	163	52	G ½	1.0
C 12	8280100	17	60	3.2	354	362	168	64	G ½	1.0
C 18	8280200	17	42	4.7	354	362	222	76	G ¾	1.0
C 25	8280300	17	42	5.5	409	419	239	93	G ¾	1.0
C 35	8280400	17	24	7.3	480	457	240	97	G ¾	1.0
C 50	8280500	17	20	8.1	480	457	318	125	G ¾	1.5
C 80	8280600	17	8	14.5	634	612	325	135	G ¾	1.5

Vn Nominal Volume [litres]

Reflex F

- Flat vessel for heating (built-in boiler applications)
- According to DIN EN 13831 norm part 3, max. operating temperature 70°C
- From 18 litres with wall-hung clip
- Meets or exceeds EC norms for pressure vessels 97/23/CE
- Durable epoxy coating
- Factory pre-pressurised gas chamber (Nitrogen)

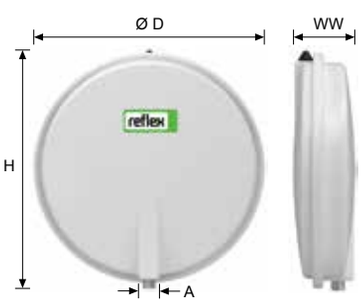

8 litres

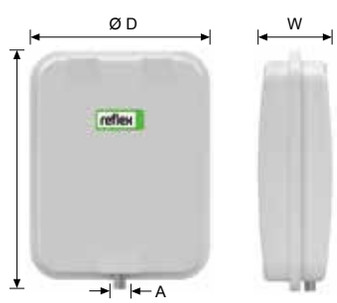

12-24 litres

CE

3 bar

Type 3 bar / 120°C	Article No	Material Group	PU	Weight kg	H mm	D mm	W mm	A	Pre-charge pressure bar
F 8	9600011	15	54	6.3	389	389	88	G 3/8	0.75
F 12	9600030	15	36	7.7	444	350	108	G 1/2	1.0
F 15	9600040	15	36	8.2	444	350	134	G 3/4	1.0
F 18	9600000	15	28	8.7	444	350	158	G 3/4	1.0
F 24	9600010	15	25	9.4	444	350	180	G 3/4	1.0

Vn Nominal Volume [litres]

Reflex S

- For heating and chilled water applications
- Suitable for anti-frost mixture up to 50%
- Provided with suspension bracket for easy installation
- Butyl bladder according to DIN EN 13831 norm part 3,
- Max. operating temperature 70°C
- Meets or exceeds EC norms for pressure vessels 97/23/EC
- Durable epoxy coating with attractive new colour
- Factory pre-pressurised gas chamber (Nitrogen)
- Reflex EN, now with it's new name Reflex C

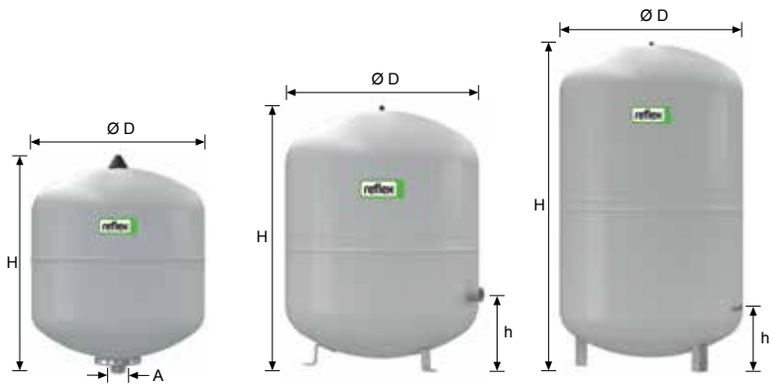

2-33 litres | 50-250 litres | 300-600 litres

10 bar

Type 10 bar / 120°C	Article No Grey	Article No White	Material Group	PU	Weight kg	Ø D mm	H mm	h mm	A	Pre-charge pressure bar
S 2	8707700	-	14	280	1.0	132	260	-	G ¾	0.5
S 8	8703900	9702600	14	96	2.5	206	316	-	G ¾	1.5
S 12	8704000	9702700	14	72	2.5	280	300	-	G ¾	1.5
S 18	8704100	9702800	14	56	3.2	280	374	-	G ¾	1.5
S 25	8704200	9702900	14	42	4.5	354	496	-	G ¾	1.5
S 33	8706200	9706300	14	24	6.3	409	455	-	G ¾	1.5
S 50	8209500	-	19	20	9.5	480	469	158	R ¾	3.0
S 80	8210300	-	19	12	14.6	480	538	166	R 1	3.0
S 100	8210500	-	19	10	15.5	480	644	166	R 1	3.0
S 140	8211500	-	19	6	17.4	634	941	210	R 1	3.0
S 200	8213400	-	19	-	35.6	634	758	205	R 1	3.0
S 250	8214400	-	19	-	40.8	634	888	205	R 1	3.0
S 300	8215400	-	19	-	47.0	740	1092	235	R 1	3.0
S 400	8219000	-	19	-	61.0	740	1102	245	R 1	3.0
S 500	8219100	-	19	-	72.0	740	1321	245	R 1	3.0
S 600	8219200	-	19	-	87.0	740	1559	245	R 1	3.0

Vn Nominal Volume [litres]

Reflex S/V

- Combination tank integrating a solar expansion vessel with an intermediate vessel in one single vessel for solar heating and chilled water applications
- Suitable for anti-frost mixture up to 50%
- Noticeable reduction of space and installation costs
- Non-repleacable diaphragm according to DIN EN 13831 norm part 3
- Meets or exceeds EC norms for pressure vessels 97/23/CE
- 33 litres with wall hung clip
- Max. operating pressure : 10 bar
- Operating temperature range -10/+70°C (diaphragm) -10/+120°C (tank)
- Factory pre-pressurised gas chamber (Nitrogen)



18-33 litres

10 bar

Type 10 bar / 120°C	Article No Grey	Article No White	Material Group	Volume Solar/intermediate litres	Weight kg	Ø D mm	H mm	A	Pre-charge pressure bar
S/V 18/6	9702410	8702410	14	18/6	4.2	280	462	G ¾	2.5
S/V 25/8	9702510	8702510	14	25/8	5	280	609	R ¾	2.5
S/V 33/12	9706910	8706910	14	33/12	7	354	594	R ¾	2.5

Vn Nominal Volume [litres]

Expansion Vessels For Heating & Chilled Water

Reflex G

- For heating and chilled water applications
- **Butyl** replaceable bladder, according to DIN EN 13831 norm part 3, max. operating temperature 70°C
- Meets or exceeds EC norms for pressure vessels 97/23/EC
- Inspection opening (Above 1000 litres Ø 1000 mm)
- Factory-mounted pressure gauge
- Threaded connections up to 1000 litres
- Flanged connections above 1000 litres
- 3000 to 10000 litres with upper flange
- Durable epoxy coating with attractive new colour
- Factory pre-pressurised gas chamber (Nitrogen)



100-500 litres



600-1000 litres
Ø 740



1000-10000 litres
Ø 1000

6 bar

Type 6 bar / 120°C	Article No Grey	Material Group	Weight kg	Ø D mm	H mm	h mm	A	Pre-charge pressure bar
G 100	8519000	21	17.0	480	856	187	G 1	3.5
G 200	8519100	21	37.0	634	972	190	G 1	3.5
G 300	8519200	21	42.0	634	1272	190	G 1	3.5
G 400	8521605	21	43.0	740	1253	146	G 1	3.5
G 500	8521705	21	51.0	740	1473	146	G 1	3.5
G 600	8522605	21	66.0	740	1718	146	G 1	3.5
G 800	8523610	21	94.0	740	2183	146	G 1	3.5
G 1000 Ø 740	8546605	21	150.0	740	2593	146	G 1	3.5
G 1000 Ø 1000	8524605	22	228.0	1000	1973	307	DN 65/PN 6	3.5
G 1500	8526605	22	280.0	1200	1971	305	DN 65/PN 6	3.5
G 2000	8527605	22	250.0	1200	2431	305	DN 65/PN 6	3.5
G 3000	8544605	22	620.0	1500	2480	334	DN 65/PN 6	3.5
G 4000	8529605	22	770.0	1500	3053	334	DN 65/PN 6	3.5
G 5000	8530605	22	849.0	1500	3588	344	DN 65/PN 6	3.5
G 8000	Per Request	22	979.0	1500	5404	236	DN 100/PN16	3.5
G 10000		22	1166.0	1500	6560	236	DN 100/PN16	3.5

10 bar

Type 10 bar / 120°C	Article No Grey	Material Group	Weight kg	Ø D mm	H mm	h mm	A	Pre-charge pressure bar
G 100	8518000	21	14.9	480	856	153	G 1	3.5
G 200	8518100	21	33.4	634	972	144	G 1 ¼	3.5
G 300	8518200	21	34.6	634	1273	144	G 1 ¼	3.5
G 400	8521005	21	51.0	740	1245	133	G 1 ¼	3.5
G 500	8521006	21	57.1	740	1475	133	G 1 ¼	3.5
G 600	8522006	21	118.0	740	1859	263	G 1 ½	3.5
G 800	8523005	21	166.0	740	2324	263	G 1 ½	3.5
G 1000 Ø 740	8546005	21	174.0	740	2604	263	G 1 ½	3.5
G 1000 Ø 1000	8524005	22	335.0	1000	2001	286	DN 65/PN 16	3.5
G 1500	8526005	22	390.0	1200	1991	291	DN 65/PN 16	3.5
G 2000	8527005	22	485.0	1200	2451	291	DN 65/PN 16	3.5
G 3000	8544005	22	830.0	1500	2532	320	DN 65/PN 16	3.5
G 4000	8529005	22	1064.0	1500	3107	320	DN 65/PN 16	3.5
G 5000	8530005	22	1274.0	1500	3642	320	DN 65/PN 16	3.5
G 8000	8545000	22	1470.0	1500	5404	236	DN 100/PN 16	3.5
G 10000	8533000	22	1750.0	1500	6560	236	DN 100/PN 16	3.5

V_n Nominal Volume [litres]

Options

- Operation pressure >10 bar
- Flanged connection:
  For G 1000 - 5000 tanks: DN 150, DN 200
  For G 8000 - 10000 tanks: DN 300

Accessories

MBM II Bladder Rupture Detector

- For the signalling of bladder rupture in Reflex G
- Consists of an electrode and relay (factory-mounted)
- Operates 230 V / 50 Hz supply
- Three terminal dry contact
- Recommended: 1 device for each vessel

Article No : 7857700 **Material Group :** 86



Relay
Wall mounted (on site)



Electrode
Factory mounted



German TÜV Certification

German TÜV factory test certification

Article no : 7945610 **Material Group** : 95

AG Connection Set

- For quick installation and easy inspection of vessel
- Including lockshield valve
- G 1/2 drain valve with loose connection
- According to DIN EN 12828
- PN 16 / 120°C

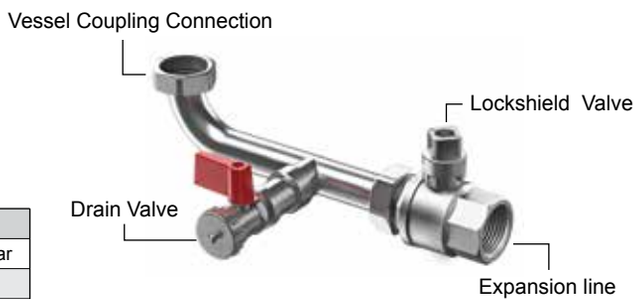

Article	Article No	Material Group	Suitable For Model
R 1	9119204	80	G 400 - G 1000 Ø 740/10 bar
R 1 ¼	9119205	80	G 100 - G 500/10 bar
R 1 ½	9119206	80	G 600 - G 1000 Ø 740/10 bar

Reflex Cap Valve - Lockshield

- Shut-off device for inspection and removal of expansion vessel
- Suitable for G, S, N, NG and V vessels

R 3/4x3/4 **Article No :** 7613000 **Material Group :** 84
R 1x1 **Article No :** 7613100 **Material Group :** 84



Digital Pressure Gauge

- Display range up to approximately 9 bar
- Pressure indication in bar, kPa, psi

Article No : 9119198 **Material Group :** 86



Reflex V Intermediate Tank

- Necessary for installations subject to norm EN 13831 with return temperatures > 70°C or cooling systems at ≤ 0°C
- To avoid faster aging of diaphragm/bladder when subjected to higher temperatures (heating) and to prevent condensation water from freezing (cooling)
- Meets or exceeds EC norms for pressure vessels 97/23/EC
- Flanged water connections: 200 litres and above
- Durable epoxy coating with attractive new colour



6-20 litres



40-60 litres



200-350 litres



500-750 litres



1000-2000 litres



3000-5000 litres

CE

6 bar

Type 6 bar / 120°C	Article No Grey	Material Group	PU	Weight kg	Ø D mm	H mm	h mm	A
V 500	8852800	24	-	160.0	750	1632	210	DN 40/PN 6
V 750	8851800	24	-	205.0	750	2323	210	DN 40/PN 6
V 1000	8851905	24	-	310.0	1000	2020	305	DN 65/PN 6
V 1500	8852305	24	-	445.0	1200	2020	305	DN 65/PN 6
V 2000	8852405	24	-	545.0	1200	2478	305	DN 65/PN 6
V 3000	8852505	24	-	775.0	1500	2556	340	DN 65/PN 6
V 4000	8853405	24	-	1060.0	1500	3131	340	DN 65/PN 6
V 5000	8854805	24	-	1095.0	1500	3666	340	DN 65/PN 6

10 bar

Type 10 bar / 120°C	Article No Grey	Material Group	PU	Weight kg	Ø D mm	H mm	h mm	A
V 6	8403100	24	96	2.0	206	244	-	R 3/4
V 12	8403200	24	72	3.0	280	287	-	R 3/4
V 20	8402000	24	42	4.0	280	360	-	R 3/4
V 40	8403400	24	18	7.8	409	562	113	R 1
V 60	8402600	24	12	23.0	409	732	172	R 1
V 200	8701800	24	-	43.0	634	901	142	DN 40/PN 16
V300	8701900	24	-	48.0	634	1201	142	DN 40/PN 16
V 350	8702400	24	-	51.0	640	1341	210	DN 40/PN 16
V 1000	8400205	24	-	560.0	1000	2055	286	DN 65/PN 16
V 1500	8400305	24	-	780.0	1200	2045	284	DN 65/PN 16
V 2000	8400405	24	-	940.0	1200	2055	284	DN 65/PN 16
V 3000	8400505	24	-	1405.0	1500	2598	313	DN 65/PN 16
V 4000	8400605	24	-	1930.0	1500	3178	313	DN 65/PN 16
V 5000	8400705	24	-	2015.0	1500	3173	313	DN 65/PN 16

V_n Nominal Volume [litres]

Options V Intermediate Tank

- Operation pressure >10 bar
- Nominal volume > 5000 litres
- Operation temperature > 120°C
- German TÜV factory test certification
- Individual approval carried out by the TÜV [Notified body] in accordance with the Pressure Equipment Directive 97/23/EC

V Intermediate Tank Applications

V Intermediate tank protect the diaphragms of expansion vessels from impermissible temperature loads. According to DIN 4807 T3 and EN 13831, the continuous temperature on the diaphragms must not exceed 70°C. In a cooling water systems, temperatures ≤ 0°C should be avoided.

In heating & solar systems

As a rule, heating & solar systems are operated at return temperatures of ≤ 70°C. The installation of intermediate tank is not necessary. In the case of older systems and industrial plants, return temperatures > 70°C are sometimes unavoidable.

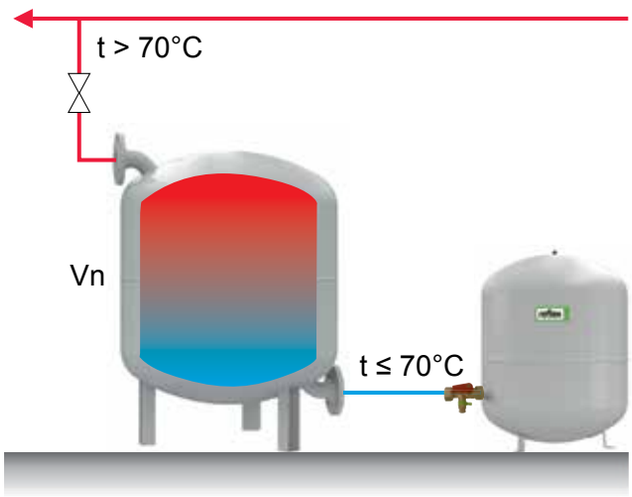

In cooling circuits

If temperature is 0°C, we recommend to an intermediate tank will be installed before the cooling vessel. To size the intermediate tank volume (Vn) , consult Reflex calculation program.

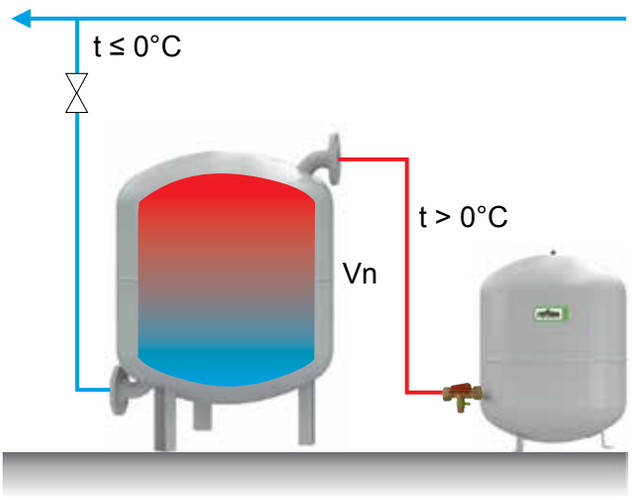

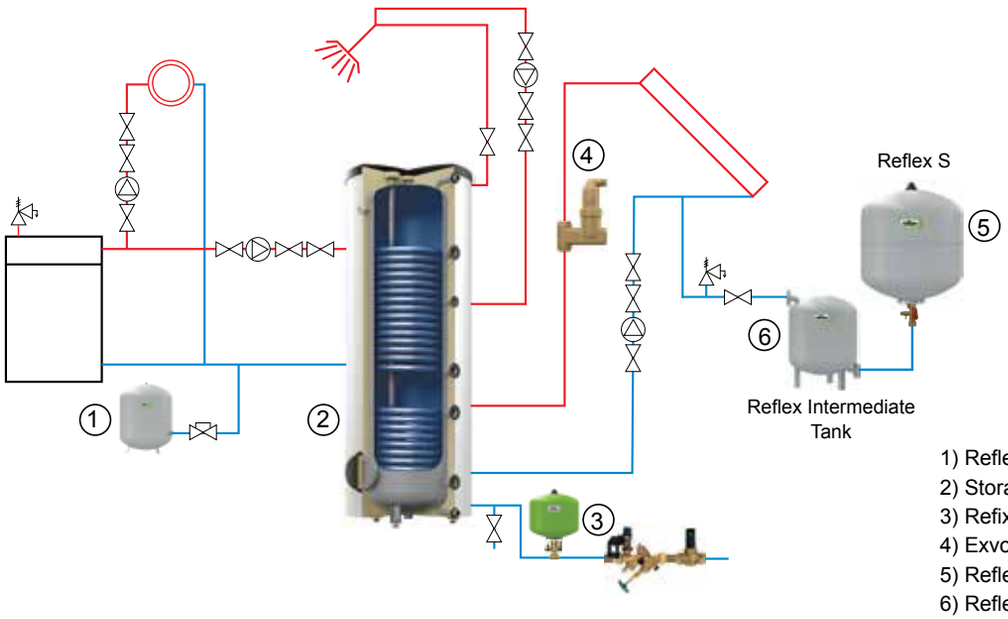

Applications

- In a solar system application the expansion vessel installed to the flow pipe line therefore, The pump pressure needs to be considered while setting the precharge gas P0.
- For the life time of the membrane we recommend to install a Reflex V intermediate tank before the expansion vessel if the return flow is > 70°C .

1) Reflex N, expansion vessel for boiler circuit
2) Storatherm Aqua Solar hot water heater
3) Refix DD, Hygienic expansion vessel
4) Exvoid, Air separator for solar circuit
5) Reflex S, Expansion vessel for solar system
6) Reflex V, Intermediate tank

Quick Selection Table For Diaphragm Expansion Vessels

Heating systems: 90/70°C

For detailed calculations, refer to our brochure "Pressurisation Systems - Planning, Calculation, Equipment" or visit www.reflex.de to use our Reflex Pro calculation software

Safety vayve P_{sv} bar	2.5		V_n	3.0				V_n	4.0				V_n	5.0					V_n
Pre-set pressure bar P_0	1.0	1,5	litres	0.5	1.0	1,5	1,8	litres	1,5	2.0	2,5	3.0	litres	2.0	2,5	3.0	3,5	4.0	litres
Content litres VA	30	-	8	85	50	19	-	8	55	30	5	-	8	55	37	16	-	-	8
	45	-	12	120	75	29	-	12	80	45	7	-	12	85	55	24	-	-	12
	85	-	18	200	130	60	17	18	140	85	28	-	18	140	100	55	8	-	18
	150	33	25	320	220	120	55	25	230	150	70	-	25	230	170	110	43	-	25
	240	80	35	470	340	200	110	33	330	240	130	25	33	360	270	180	95	5	33
	380	110	50	700	510	320	200	50	540	380	230	70	50	550	420	300	170	43	50
	500	170	80	1120	840	440	260	80	870	650	410	120	80	890	710	530	320	95	80
	620	210	100	1400	1050	540	330	100	1090	820	430	150	100	1110	890	670	420	120	100
	870	300	140	1960	1470	760	460	140	1530	1140	610	200	140	1560	1250	940	510	170	140
	1240	420	200	2800	2100	1090	660	200	2180	1630	870	290	200	2230	1780	1340	720	240	200
	1550	530	250	3500	2630	1360	820	250	2720	2040	1090	370	250	2790	2230	1670	900	300	250
	1860	630	300	4200	3150	1630	990	300	3270	2450	1300	440	300	3340	2670	2010	1080	360	300
	2480	850	400	5600	4200	2180	1320	400	4360	3270	1740	580	400	4460	3570	2670	1440	480	400
	3100	1060	500	6920	5250	2720	1650	500	5450	4080	2170	730	500	5570	4460	3340	1800	600	500
	3720	1270	600	8400	6300	3260	1980	600	6540	4900	2610	880	600	6680	5350	4010	2170	730	600
	4970	1690	800	11200	8400	4350	2640	800	8710	6540	3480	1170	800	8910	7130	5350	2890	970	800
	6210	2120	1000	13830	10500	5440	3300	1000	10890	8170	4350	1460	1000	11140	8910	6680	3610	1210	1000

Approximate water content:
Radiators
V_A = Q [kW] x 13.5 l/kW
Panel-type radiators
V_A = Q [kW] x 8.5 l/kW

Selection example
P_{SV} = 3 bar
H = 13 m
Q = 40 kW (plates 90/70°C)

V_{PH} = 1000 l (V buffer storage tank)

Calculate
V_A = 40 kW x 8.5 l/kW + 1000 = 1340 l

$P_0 \geq \frac{13}{10}$ 0.2 bar = 1.5 bar

From tha table:
With P_{SV} = 3 bar, P_0 = 1.5 bar
V_A = 1340 litres
V_n = 250 litres (for V_A max. 1360)

Selected:
1 x Reflex N 250.6 bar
1 x cap ballvalve



Visit www.reflex.de/pro for further information and the option of downloading free of charge.

Reflex recommendations:

- Select sufficiently high safety valve actuation pressure: Psv ≥ P0 + 1.5 bar
- If possible, apply a 0.2 bar margin when calculating the gas input pressure: $P0 \geq \frac{H\,[m]}{10}$ + 0.2 bar
- Due to the required supply pressure for the circulating pumps, select an pre-set pressure of at least 1 bar for roof-mounted systems also: P0 ≥ 1 bar
- In a vented system in cold conditions, set the water-side filling or initial pressure at least 0.3 bar higher than the pre-set pressure: Pfil ≥ P0 + 0.3 bar

Refix C - DE

- For potable water, heating, heat - pump, chilled water and solar applications
- **Butyl** bladder, according to DIN EN 13831 norm part 3
- Threaded stainless steel connection
- Meets or exceeds EC norms for pressure vessels 97/23/EC
- Durable epoxy coating
- Factory pre-pressurised gas chamber (Nitrogen)
- Provided with suspension bracket for easy wall mounting

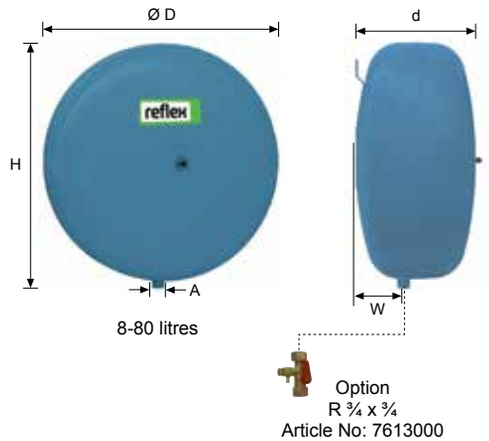

CE

10 bar/70°C

Type 10 bar / 70°C	Article No Blue	Material Group	PU	Weight kg	Ø D mm	H mm	d mm	W mm	A	Pre-charge pressure bar
C-DE 8	7270900	17	96	3.8	280	300	163	52	G ½	4.0
C-DE 12	7270910	17	60	5.2	354	375	168	64	G ½	4.0
C-DE 18	7270920	17	42	5.6	354	375	222	76	G ¾	4.0
C-DE 25	7270930	17	42	8.2	409	430	239	93	G ¾	4.0
C-DE 35	7270940	17	24	13.0	480	500	240	97	G ¾	4.0
C-DE 50	7270950	17	20	15.4	480	500	318	125	G ¾	4.0
C-DE 80	7270960	17	8	22.4	634	654	325	135	G ¾	4.0

Vn Nominal Volume [litres]

Refix DC

- For potable water, fire fighting and hydro-pneumatic well applications
- Fixed diaphragm, according to DIN EN 13831 norm part 3
- All vessel parts in contact with water are coated against corrosion
- Meets or exceeds EC norms for pressure vessels 97/23/EC
- Durable epoxy coating
- Factory pre-pressurised gas chamber (Nitrogen)
- Reflex DE Junior, now with it's new name Reflex DC

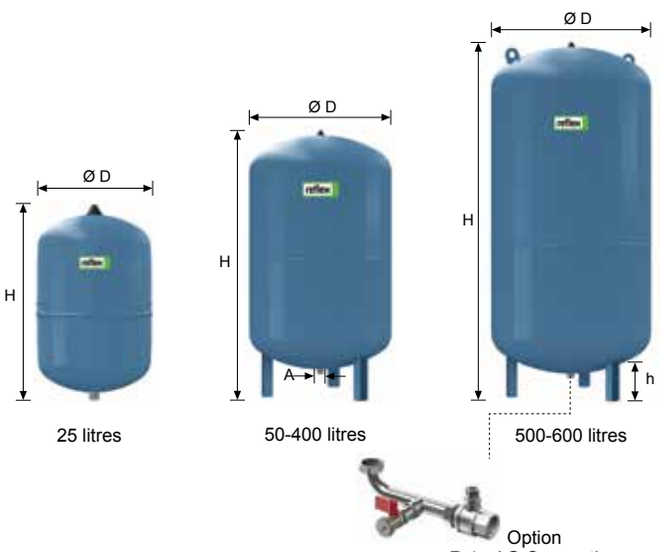

CE WRAS ACS

10 bar/70°C

Type 10 bar / 70°C	Article No Blue	Material Group	Weight kg	Ø D mm	H mm	h mm	A	Pre-charge pressure bar
DC 25	7200400	54	4.7	280	484	-	G 1	2.0
DC 50	7309600	54	12.5	409	588	113	R 1	4.0
DC 80	7309700	54	17.0	480	650	104	R 1	4.0
DC 100	7309800	54	20.5	480	755	104	R 1	4.0
DC 140	7309900	54	29.0	480	997	104	R 1	4.0
DC 200	7363500	54	40.0	634	883	91	R 1	4.0
DC 300	7363600	54	52.0	634	1184	93	R 1	4.0
DC 400	7363700	54	78.0	740	1173	81	R 1	4.0
DC 500	7363800	54	80.0	740	1392	82	R 1	4.0
DC 600	7363900	54	103.0	740	1629	73	R 1	4.0

Vn Nominal Volume [litres]

Refix DE

- For potable water, water heating and hydro-pneumatic well applications
- Bladder according to DIN EN 13831 norm part 3
- From 60 litres volume with replaceable bladder
- All vessel parts in contact with water are coated against corrosion
- Meets or exceeds EC norms for pressure vessels 97/23/EC
- Fitted with manometer from Ø 1000 mm
- Threaded connections up to 1000 litres
- Flanged connections above 1000 litres
- 3000 to 10000 litres with upper flange
- Durable epoxy coating
- Factory pre-pressurised gas chamber (Nitrogen)

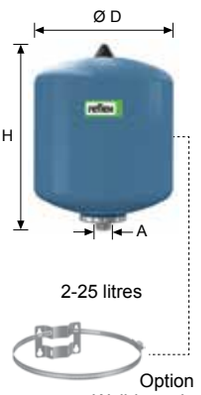

2-25 litres

Option
Wall-hung bracket
Article No: 7611000



33 litres



50-500 litres

CE WRAS ACS

10 bar

Type 10 bar / 70°C	Article No Blue	Material Group	PU	Weight kg	Ø D mm	H mm	h mm	A
DE 2	7200300	40	288	1.0	132	260	mm	G ¾
DE 8	7301000	40	96	1.7	206	316	-	G ¾
DE 12	7302000	40	72	2.4	280	307	-	G ¾
DE 18	7303000	40	56	2.8	280	377	-	G ¾
DE 25	7304000	40	42	3.7	280	496	-	G ¾
DE 33	7303900	40	24	5.7	354	454	-	G ¾
DE 33 1)	7305500	40	24	6.5	354	520	-	G ¾
DE 50	7306005	42	20	9.5	409	604	66	G 1
DE 60	7306400	42	18	11.2	409	734	102	G 1
DE 80	7306500	42	10	14.0	480	729	161	G 1
DE 100	7306600	42	10	16.0	480	834	153	G 1
DE 200	7306700	42	4	36.5	634	967	153	G 1 ¼
DE 300	7306800	42	-	41.5	634	1267	150	G 1 ¼
DE 400	7306850	42	-	73.0	740	1245	150	G 1 ¼
DE 500	7306900	42	-	103.0	740	1475	139	G 1 ¼
DE 600	7306950	42	-	128.0	740	1859	133	G 1 ½
DE 800	7306960	42	-	176.0	740	2325	263	G 1 ½
DE 1000 Ø 740	7306970	42	-	214.0	740	2604	263	G 1 ½
DE 1000 Ø 1000	7311405	44	-	427.0	1000	2001	263	DN 65/PN 16
DE 1500	7311605	44	-	542.0	1200	1991	286	DN 65/PN 16
DE 2000	7311705	44	-	717.0	1200	2451	291	DN 65/PN 16
DE 3000	7311805	44	-	962.0	1500	2521	320	DN 65/PN 16
DE 4000	7354000	44	-	1085.0	1500	3070	320	DN 65/PN 16
DE 5000	7354200	44	-	1050.0	1500	3635	320	DN 65/PN 16
DE 8000	Upon Request	44	-	1750.0	1500	5404	236	DN 100/PN 16
DE 10000		44	-	1750.0	1500	6560	236	DN 100/PN 16

V_n Nominal Volume [litres]

1) with legs

MBM II Bladder Rupture Detector

- For the signalling of bladder rupture in Reflex DE 60 litres and above
- Consists of an electrode and relay (factory-mounted)
- Operates 230 V / 50 Hz supply
- Three terminal dry contact
- Recommended: 1 device for each vessel

Article No : 7857700 **Material Group :** 86



Relay
Wall mounted (on site)



Electrode
Factory mounted



Refix DE

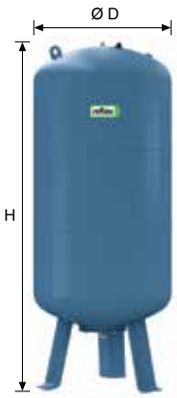

600-1000 litres
Ø 740

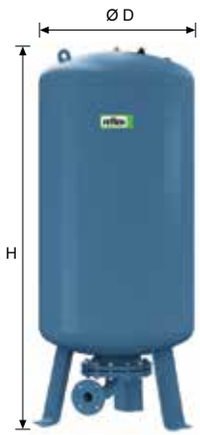

80 - 1000 litres
Ø 740/25 bar



1000-2000 litres
Ø 1000



3000-10000 litres

16 bar

Type 16 bar / 70°C	Article No Blue	Material Group	PU	Weight kg	Ø D mm	H mm	h mm	A
DE 8	7301006	40	96	2.7	206	321	-	G ¾
DE 12	7302105	40	72	3.5	280	309	-	G ¾
DE 25	7304015	40	24	5.6	280	499	-	G ¾
DE 80	7348600	42	-	23.0	480	729	153	G 1
DE 100	7348610	42	-	27.0	480	834	153	G 1
DE 200	7348620	42	-	57.0	634	967	150	G 1 ¼
DE 300	7348630	42	-	66.0	634	1267	150	G 1 ¼4
DE 400	7348640	42	-	116.0	740	1394	265	G 1 ½
DE 500	7348650	42	-	127.0	740	1614	265	G 1 ½
DE 600	7348660	42	-	158.0	740	1859	265	G 1 ½
DE 800	7348670	42	-	202.0	740	2324	265	G1 ½
DE 1000 Ø 740	7348680	42	-	244.0	740	2604	265	G1 ½
DE 1000 Ø 1000	7312805	44	-	530.0	1000	2001	286	DN 65/PN 16
DE 1500	7312905	44	-	685.0	1200	1991	291	DN 65/PN 16
DE 2000	7313005	44	-	895.0	1200	2451	291	DN 65/PN 16
DE 3000	7313105	44	-	1240.0	1500	2521	320	DN 65/PN 16
DE 4000	7354100	44	-	1100.0	1500	3110	320	DN 65/PN 16
DE 5000	7354300	44	-	1120.0	1500	3645	320	DN 65/PN 16
DE 8000	Upon Request	44	-	1750.0	1500	5404	236	DN 100/PN 16
DE 10000		44	-	1750.0	1500	6560	236	DN 100/PN 16

25 bar

Type 25 bar / 70°C	Article No Blue	Material Group	PU	Weight kg	Ø D mm	H mm	h mm	A
DE 8	7290100	40	60	3.5	206	321	-	G ¾
DE 80	7317600	44	-	70.0	450	942	159	DN 50/PN 40
DE 120	7313700	44	-	100.0	450	1253	159	DN 50/PN 40
DE 180	7313500	44	-	116.0	450	1528	159	DN 50/PN 40
DE 300	7313800	44	-	150.0	750	1318	160	DN 50/PN 40
DE 400	7313300	44	-	245.0	750	1423	160	DN 50/PN 40
DE 600	7321500	44	-	290.0	750	1868	159	DN 50/PN 40
DE 800	7321200	44	-	355.0	750	2268	159	DN 50/PN 40
DE 1000 Ø 750	7321000	44	-	245.0	750	2768	159	DN 50/PN 40
DE 1000 Ø 1000	7322200	44	-	800.0	1000	2051	242	DN 65/PN 40
DE 1500	7322100	44	-	850.0	1200	2071	291	DN 65/PN 40
DE 2000	7313400	44	-	960.0	1200	2531	240	DN 65/PN 40
DE 3000	7345700	44	-	1550.0	1500	2609	269	DN 65/PN 40

V_n Nominal Volume [litres]

Options

- Operation pressure of 40 bar
- Flanged connection DN 150 etc.
- Inner lining according to DIN/DVGW norms
- Stainless steel connection

Refix HW

- For potable water, fire fighting and hydro-pneumatic well applications
- Bladder diaphragm, according to DIN EN 13831 norm part 3, max. operating temperature 70°C
- All vessel parts in contact with water are coated against corrosion
- Meets or exceeds EC norms for pressure vessels 97/23/EC
- Durable epoxy coating
- Factory pre-pressurised gas chamber (Nitrogen)
- From 50 litres volume with replaceable bladder

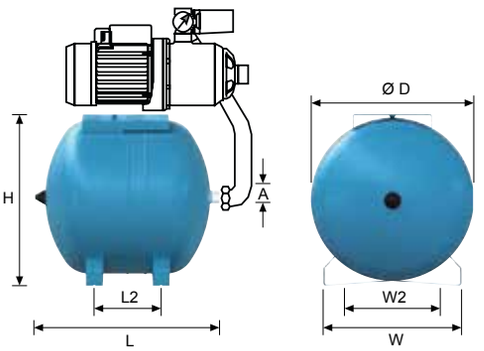

CE WRAS ACS

10 bar

Type 10 bar / 70°C	Article No Blue	Material Group	PU	Weight kg	Ø D mm	H mm	L mm	L2 mm	W2 mm	W mm	A
HW 25	7200310	49	36	5.3	280	293.4	484	228	214	270	G ¾
HW 50	7200320	49	20	15.0	409	433	503	175	285	350	G ¾
HW 60	7200330	49	-	16.0	409	433	573	175	285	350	G 1
HW 80	7200340	49	-	17.0	480	494	576	230	285	355	G 1
HW 100	7200350	49	-	15.0	480	494	681	340	285	355	G 1

Vn Nominal Volume [litres]

Water Shock Arrestor

- To be used along devices where sudden pressure build-up is caused by quick shut-off such as washing machines, dish washers etc.
- Meets or exceeds EC norms for pressure vessels 97/23/EC
- Volume 165 cm3
- Durable epoxy coating
- Factory pre - pressurised gas chamber 4 bar (Nitrogen)
- 10 bar / 70°C

Article No : 7351000 **Material Group :** 74



CE WRAS

Refix

Refix DD/DT Hygienic Pressure Vessels

- The Refix DD/DT vessels continue to deliver unparalleled performance and persistence, meeting all the tough requirements of the German DIN 4807 part 5. The shell of the tank is made of heavy gauge steel and has epoxy coating from inside.
- The dual water connection for internal circulation delivered in various sizes ranging from 1 1/4 up to DN 100. The butyl rubber bladder offers the lowest permeability compared to any material used today.



Refix DD

- For potable water applications according to German DIN/DVGW 4807 norm part 5
- Integrated internal circulation
- **Butyl** bladder according to German KTW-C norm
- Meets or exceeds EC norms for pressure vessels 97/23/EC
- Inner anti-corrosion coating according to German KTW-A (food stuff regulation)
- Factory pre-pressurised gas chamber 4 bar (Nitrogen)
- Can be installed with Flowjet - flow through valve
- Connectable to T-piece Rp 3/4 (included in Refix DD delivery)

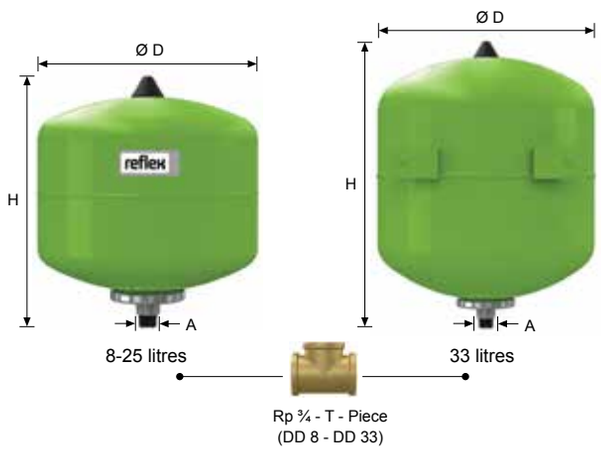

10 bar	Type 10 bar / 70°C	Article No Green	Article No White	Material Group	PU	Weight kg	D mm	H mm	A
	DD 2 [1)]	7381500	-	48	288	1.0	132	269	G 3/4
	DD 8	7308000	7307700	48	96	1.7	206	330	G 3/4
	DD 12	7308200	7307800	48	72	2.0	280	318	G 3/4
	DD 18	7308300	7307900	48	56	2.5	280	387	G 3/4
	DD 25	7308400	7380400	48	42	3.3	280	507	G 3/4
	DD 33	7380700	7380800	48	24	5.8	354	468	G 3/4

25 bar	Type 10 bar / 70°C	Article No Green	Article No White	Material Group	PU	Weight kg	D mm	H mm	A
	DD 8	7290200	7290300	48	60	3.2	206	336	G ¾

V_n Nominal Volume [litres]

[1)] T - Piece is not included to the delivery

Flowjet - Flow Through, Shut-off and Discharge Valve

- For easy assembly and maintenance of Refix DD pressure tanks according to DIN/DVGW 4807 norm part 5
- Max. operating pressure 16 bar
- Max. operating temperature 70°C

Article No : 9116799 **Material Group :** 85


Flowjet

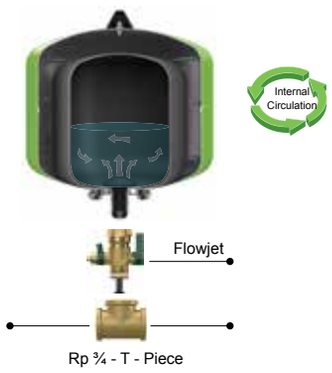

Refix DT

- For potable water applications according to German DIN/DVGW 4807 norm part 5
- Integrated internal circulation
- In case of Rp 1/4 connection (60 - 500 litres) factory-equipped with Flowjet: flow-through, shut-off and discharge valve
- Replaceable butyl bladder according to German KTW-C norm
- Inner anti-corrosion coating according to German KTW-A (food stuff regulation)
- Meets or exceeds EC norms for pressure vessels 97/23/EC
- Factory pre-pressurised gas chamber 4 bar (Nitrogen)
- Reflex DT5, now with it's new name Reflex DT



60-500 litres
Flowjet



600-1000 litres (Ø 740)
Duo Connection

10 bar

Type 10 bar / 70°C	Connection	Article No Green	Material Group	Weight kg	Ø D mm	H mm	h mm
DT 60	Flow jet Rp 1 ¼	7309000	47	15.0	409	766	80
DT 80	Flowjet Rp 1 ¼	7309100	47	16.5	480	750	65
	DN 50/PN 16	7365000	47	23.0	480	750	100
	DN 50/PN 16	7335705	47	24.0	480	750	110
	DN 50/PN 16	7335805	47	26.0	480	750	115
DT 100	Flowjet Rp 1 ¼	7309200	47	18.6	480	856	65
	DN 50/PN 16	7365400	47	26.0	480	856	100
	DN 65/PN 16	7365405	47	27.0	480	856	110
	DN 80/PN 16	7365406	47	28.0	480	856	115
DT 200	Flowjet Rp 1 ¼	7309300	47	37.0	634	975	80
	DN 50/PN 16	7365100	47	53.0	634	975	105
	DN 65/PN 16	7365105	47	54.0	634	975	115
	DN 80/PN 16	7365106	47	57.0	634	975	120
DT 300	Flowjet Rp 1 ¼	7309400	47	43.5	634	1275	80
	DN 50/PN 16	7365200	47	59.0	634	1275	105
	DN 65/PN 16	7336305	47	60.0	634	1275	115
	DN 80/PN 16	7336405	47	63.0	634	1275	120
DT 400	Flowjet Rp 1 ¼	7319305	47	73.0	740	1245	70
	DN 50/PN 16	7365500	47	79.0	740	1245	95
	DN 65/PN 16	7336505	47	80.0	740	1245	105
	DN 80/PN 16	7336605	47	83.0	740	1245	110
DT 500	Flowjet Rp 1 ¼	7309500	47	69.0	740	1475	70
	DN 50/PN 16	7365300	47	85.0	740	1475	90
	DN 65/PN 16	7365307	47	86.0	740	1475	100
	DN 80/PN 16	7365305	47	89.0	740	1475	110
DT600	DN 50/PN 16	7365600	47	164.0	740	1860	235
	DN 65/PN 16	7336705	47	165.0	740	1860	235
	DN 80/PN 16	7336806	47	177.4	740	1860	235
DT 800	DN 50/PN 16	7365700	47	204.0	740	2325	235
	DN 65/PN 16	7336905	47	205.0	740	2325	235
	DN 80/PN 16	7337006	47	208.0	740	2325	235
DT 1000 Ø 740	DN 50/PN 16	7365800	47	244.0	740	2604	235
	DN 65/PN 16	7337105	47	245.0	740	2604	235
	DN 80/PN 16	7337205	47	248.0	740	2604	235
DT 1000 Ø 1000	DN 50/PN 16	7320105	46	386.2	1000	2000	160
	DN 65/PN 16	7337305	46	386.2	1000	2000	150
	DN 100/PN 16	7337405	46	386.2	1000	2000	140
DT 1500	DN 50/PN 16	7320305	46	502.4	1200	2000	160
	DN 65/PN 16	7337505	46	502.4	1200	2000	150
	DN 100/PN 16	7337605	46	502.4	1200	2000	140
DT 2000	DN 50/PN 16	7320505	46	686.5	1200	2450	160
	DN 65/PN 16	7337705	46	686.5	1200	2450	150
	DN 100/PN 16	7337805	46	686.5	1200	2450	140
DT 3000	DN 50/PN 16	7320705	46	1054.0	1500	2520	190
	DN 65/PN 16	7337905	46	1057.0	1500	2520	180
	DN 100/PN 16	7338005	46	1057.0	1500	2520	170

Vn Nominal Volume [litres]

Refix DT



1000-2000 litres (Ø 1000)
Duo Connection



3000 litres
Duo Connection



16 bar

Type 16 bar / 70°C	Connection	Article No Green	Material Group	Weight kg	Ø D mm	H mm	h mm
DT 80	Flow jet Rp 1 ¼	7316005	47	27.0	480	750	65
	DN 50/PN 16	7370000	47	32.0	480	750	100
	DN 65/PN 16	7310306	47	33.0	480	750	110
	DN 80/PN 16	7310307	47	35.0	480	750	115
DT 100	Flow jet Rp 1 ¼	7365408	47	29.0	480	835	65
	DN 50/PN 16	7370100	47	34.0	480	835	100
	DN 65/PN 16	7370101	47	35.0	480	835	110
	DN 80/PN 16	7370102	47	37.0	480	835	115
DT 200	Flow jet Rp 1 ¼	7365108	47	55.0	634	975	80
	DN 50/PN 16	7370200	47	61.0	634	975	105
	DN 65/PN 16	7370205	47	62.0	634	975	115
	DN 80/PN 16	7370206	47	65.0	634	975	120
DT 300	Flow jet Rp 1 ¼	7319205	47	64.0	634	1275	80
	DN 50/PN 16	7370300	47	70.0	634	1275	105
	DN 65/PN 16	7314205	47	71.0	634	1275	115
	DN 80/PN 16	7314206	47	74.0	634	1275	120
DT 400	DN 50/PN 16	7370400	47	113.0	740	1395	235
	DN 65/PN 16	7339006	47	119.0	740	1395	235
	DN 80/PN 16	7339005	47	122.0	740	1395	235
DT 500	DN 50/PN 16	7370500	47	130.0	740	1615	235
	DN 65/PN 16	7370507	47	131.0	740	1615	235
	DN 80/PN 16	7370505	47	134.0	740	1615	235
DT600	DN 50/PN 16	7370600	47	174.0	740	1860	235
	DN 65/PN 16	7339105	47	175.0	740	1860	235
	DN 80/PN 16	7339205	47	178.0	740	1860	235
DT 800	DN 50/PN 16	7370700	47	224.0	740	2325	235
	DN 65/PN 16	7339305	47	225.0	740	2325	235
	DN 80/PN 16	7339406	47	228.0	740	2325	235
DT 1000 Ø 740	DN 50/PN 16	7370800	47	259.0	740	2604	235
	DN 65/PN 16	7339505	47	260.0	740	2604	235
	DN 80/PN 16	7339605	47	263.0	740	2604	235
DT 1000 Ø 1000	DN 65/PN 16	7320205	46	488.0	1000	2000	160
	DN 80/PN 16	7339705	46	488.0	1000	2000	150
	DN 100/PN 16	7339805	46	488.0	1000	2000	140
DT 1500	DN 65/PN 16	7320405	46	630.0	1200	2000	160
	DN 80/PN 16	7339905	46	630.0	1200	2000	150
	DN 100/PN 16	7340005	46	630.0	1200	2000	140
DT 2000	DN 65/PN 16	7320605	46	850.0	1200	2450	160
	DN 80/PN 16	7340105	46	850.0	1200	2450	150
	DN 100/PN 16	7340205	46	850.0	1200	2450	140
DT 3000	DN 65/PN 16	7320805	46	1240.0	1500	2520	190
	DN 80/PN 16	7340305	46	1240.0	1500	2520	180
	DN 100/PN 16	7340405	46	1240.0	1500	2520	170

V_n Nominal Volume [litres]

Options
- Operation pressure >16 bar
- MBM connection with tanks over 1000 litres

Accessories

German TÜV Certification

German TÜV factory test certification

Article No : 7945610 **Material Group :** 95

Reflex Wall - Hung Holder

- Reflex Wall - Hung holder for vessels 8 - 25 litres
- Bracket with tightening strap for vertical mounting

Article No : 7611000 **Material Group :** 36



MBM II Bladder Rupture Detector

- For the signalling of bladder rupture in Reflex DT
- Consists of an electrode and relay (factory-mounted)
- Operates 230 V / 50 Hz supply
- Three terminal dry contact
- Recommended: 1 device for each vessel

Article No : 7857700 **Material Group :** 86



Relay
Wall mounted (on site)



Electrode
Factory mounted



Digital Pressure Gauge

- Display range up to approximately 9 bar
- Pressure indication in bar, kPa, psi

Article No : 9119198 **Material Group :** 86



Quick Selection Table For Hot Water Heating Applications

Selection of the nominal vessel volume (Vn)

10°C Cold water inlet temperature

60°C Storage temperature



- Preset press. gas P_0 = 3.0 bar
- Set press. of the pressure reducer $P_a \geq 3.2$ bar

PsV [bar]	6	7	8	10
VSt [litres]	Nominal volume Refix [litres]			
90	8	8	8	8
100	8	8	8	8
120	8	8	8	8
130	8	8	8	8
150	8	8	8	8
180	12	8	8	8
200	12	12	8	8
250	12	12	12	8
300	18	18	12	12
400	25	18	18	18
500	25	25	18	18
600	33	25	25	18
700	33	33	25	25
800	60	33	33	25
900	60	60	33	25
1000	60	60	33	33
1500	80	80	60	60
2000	100	100	80	80
3000	100	100	100	100

- Pre-charge press. gas P_0 = 4.0 bar = factory setting
- Set press. of the pressure reduce $P_a \geq 4.2$ bar

PsV [bar]	6	7	8	10
VSt [litres]	Nominal volume Refix [litres]			
90	8	8	8	8
100	12	8	8	8
120	12	8	8	8
130	12	8	8	8
150	18	12	8	8
180	18	12	8	8
200	18	12	12	8
250	25	18	12	12
300	25	18	18	12
400	33	33	18	18
500	60	33	25	18
600	60	60	25	25
700	60	60	33	25
800	80	60	60	25
900	80	60	60	33
1000	100	60	60	60
1500	200	100	80	60
2000	200	200	100	80
3000	300	200	200	100

Selection according to peak volume flow Vs

When the nominal volume of the Refix unit has been selected, it must be checked in the case of water-carrying vessels whether the peak volume flow V s resulting from the piping calculation according to DIN 1988 can be implemented on the Refix. If this is the case, the 8-33 litre vessel of the Refix DD unit may have to be replaced with a 60 litre Refix DT 60 vessel to enable a higher flow rate. Alternatively, a Refix DD unit with an appropriately dimensioned T-piece may be used.

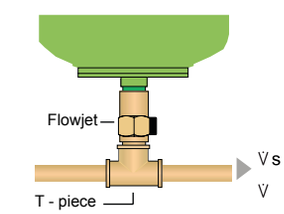

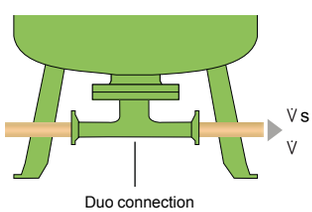

Available connections		Recomm. max. peak flow $\dot{V}s$*	Actual Pressure loss with volume flow $\dot{V}$
Refix DD With or without Flowjet T - piece duct	8-33 litres Rp ¾ = Standard Rp 1 (on site)	≤ 2.5 m³/h ≤ 4.2 m³/h	$\Delta p = 0.03 \text{ bar} \cdot \left(\frac{\dot{V}\,[m^3/h]}{2.5\ m^3/h}\right)^2$ negligible
Refix DT With Flowjet Rp 1 ¼	60-500 litres	≤ 7.2 m³/h	$\Delta p = 0.04 \text{ bar} \cdot \left(\frac{\dot{V}\,[m^3/h]}{7/2\ m^3/h}\right)^2$
Refix DT Duo connection DN 50 Duo connection DN 65 Duo connection DN 80 Duo connection DN 100	80-3000 litres	≤ 15 m³/h ≤ 27 m³/h ≤ 36 m³/h ≤ 56 m³/h	$\Delta p = 0.14 \text{ bar} \cdot \left(\frac{\dot{V}\,[m^3/h]}{15\ m^3/h}\right)^2$ $\Delta p = 0.11 \text{ bar} \cdot \left(\frac{\dot{V}\,[m^3/h]}{27\ m^3/h}\right)^2$ negligible
Refix DE, DC, CD-E (non water-carrying)		Unlimited	$\Delta p = 0$

* Calculated for a speed of 2 m/s

For detailed calculations, refer to our brochure “Pressurisation Systems - Planning, Calculation, Equipment” or visit www.reflex.de to use our Reflex Pro calculation software

Refix DE Applications

DE vessel on a booster set

Pressure vessels are installed on a pressure booster system in order to reduce pump starts and to eliminate pump starts at small draw-offs. This reduces pump wear and extends pump life time.

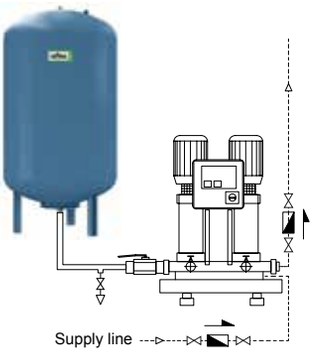

DT vessel on a booster set - suction side

Pressure vessel with flow-through function according to DIN 4807, part 5. Inside epoxy coating in combination with butyl rubber bladder ensures to fulfil the most strict German food stuff regulations such as KTW-C (bladder) and KTW-A (inner lining). If supply pressure from the water mains is too low a pressure vessel can advantageously be installed on the suction side of the booster system. This will avoid cavitation in the pump, and also will eliminate to risk of creating vacuum in the water mains by pump starts. This will reduce the pump wear.

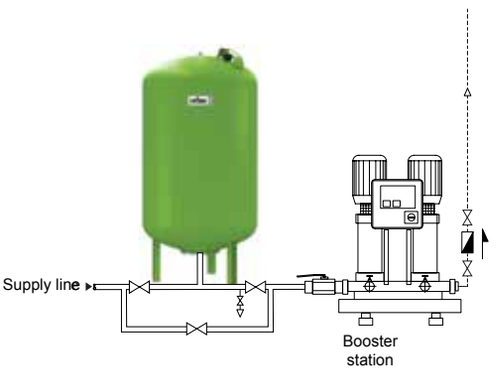

DT vessel on a booster set - discharge side

Pressure vessel with flow-through function according to DIN 4807, part 5. Inside epoxy coating in combination with butyl rubber bladder ensures to fulfil the most strict German food stuff regulations such as KTW-C (bladder) and KTW-A (inner lining). With the vessel mounted on the discharge side of the booster system, the numbers of pump starts are reduced and also pump starts at small draw-offs are totally eliminated. Maintenance of the vessel can be done without shutting off the water supply with the shown pipework.

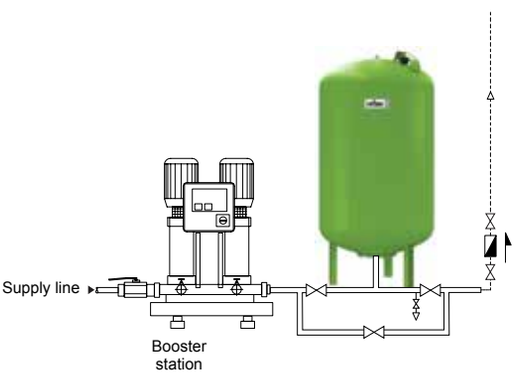

DT vessel on a booster set - suction and discharge side

Installation of a pressure vessel on both sides of the pressure booster set can also be necessary. See explanation above. By using the DT pressure vessel according DIN 4807, part 5 there is a high grade of protection against contamination of the cold water supply mains. Inside epoxy coating in combination with butyl rubber bladder ensures to fulfil the most strict German food stuff regulations such as KTW-C (bladder) and KTW-A (inner lining).

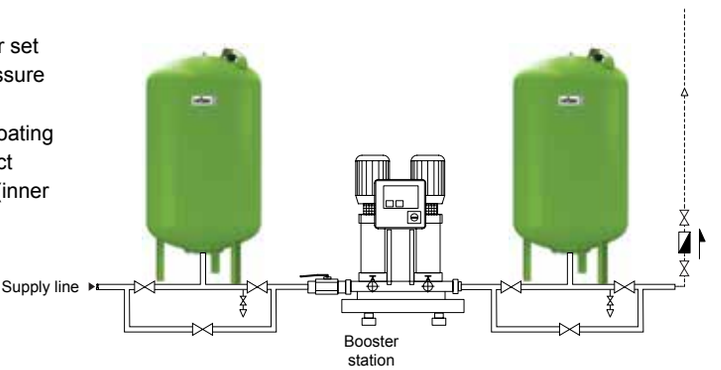

Reflexomat

Pressurisation unit compressor-controlled



Control Unit

Control Basic



- 2-line LCD display
- 8 control keys
- 2 status displays
- Integrated control of system pressure, deaeration and water make-up
- Manual and automatic operation
- Common fault output signal
- Input, for contact water meter
- RS-485 interface

Control Basic S



- 2-line LCD display
- 2 status displays
- Integrated control of system pressure, deaeration and water make-up
- Manual and automatic operation
- Input, for contact water meter
- RS-485 interface

Control Touch



- 4.3" touch screen colour display
- Graphic user interface
- Simply structured plain text menus including operating instructions and help texts
- Integrated control of system pressure, deaeration and water make-up
- Manual and automatic operation
- Permanent display of the most important operating parameters in the system diagram
- Intelligent Plug & Play operational management
- Evaluation and storage of the most important operational data
- Extensive interfaces:
  - Input, for contact water meter
  - 2 x dry contact outputs for error messages
  - 2 x analogue outputs for pressure and vessel content
  - 2 x RS-485 interfaces
  - Plugs for Bluetooth module, HMS networks and KNX module, as well as SD card





PLUS X AWARD®
achieved for:
Innovation
High Quality
Design
Ease of Use
Functionality

Reflexomat

Pressurisation unit compressor-controlled



The safety valve
protects the vessel from excessive pressure.

Lifting lugs
for ease of transport on site (1000 litres and above)

Inner anti-corrosion lining

MBM II bladder rupture detector
(option)

Bladder
High-quality butyl, reliably protects the expansion water from exposure to air

Tank
Heavy duty steel with durable epoxy coating , available in 6 and 10 bar

The flex connection
for the expansion line is a prerequisite for the proper operation of the level control

The load cell (fluid level measurement)
allows the operator to determine the filling level

Most reliable and silent Compressor to accomodate up to 12 MW input each



Control unit
State-of-the-art controls both in function and design. Guarantees maximum operating comfort. All reflex controls (Variomat, Reflexomat, Servitec, Gigamat) have been designed according to a uniform design guideline

The solenoid valve
is TÜV-tested and consequently satisfies the requirements of DIN 4751 T2 for systems up to 120°C

Pressure sensor

Robust mounting skid for compressor and control unit

PLUS X AWARD®
achieved for:
Innovation
High Quality
Design
Ease of Use
Functionality

Reflexomat

Reflexomat System With 1 & 2 Compressors

Reflexomat up to 12 MW with 1 compressor

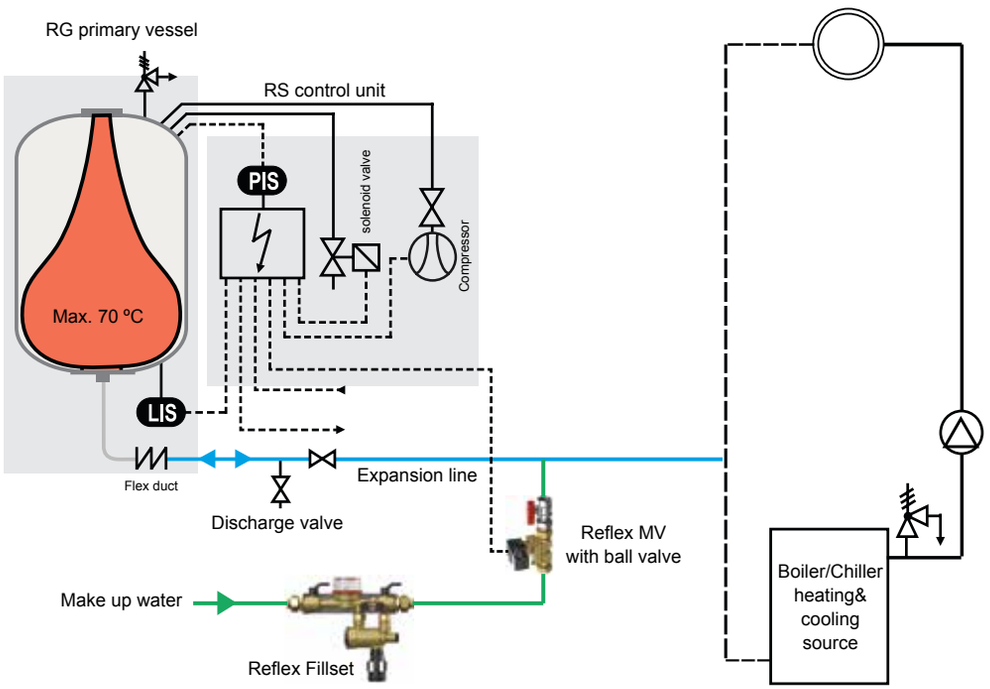

PIS Pressure maintenance, compensating for the expansion volume

The compressor and solenoid valve are actuated in such a way that if pressure is maintained at approximately ± 0.1 bar, the expansion water flowing in or out via expansion line P is compensated for in the basic vessel. Because pressure is "stored" in the form of an air buffer in the expansion vessel (basic vessel), the method of operation is very gentle. Reflexomats with 2 compressors work with load-based, automatically alternating operation and automatic malfunction switchover.

Note: The useful volume rate is 90 % for the compressor controlled pressurisation units.
Therefore according to calculations the required expansion tank size is smaller than static tank size.

Reflexomat up to 24 MW with 2 compressors

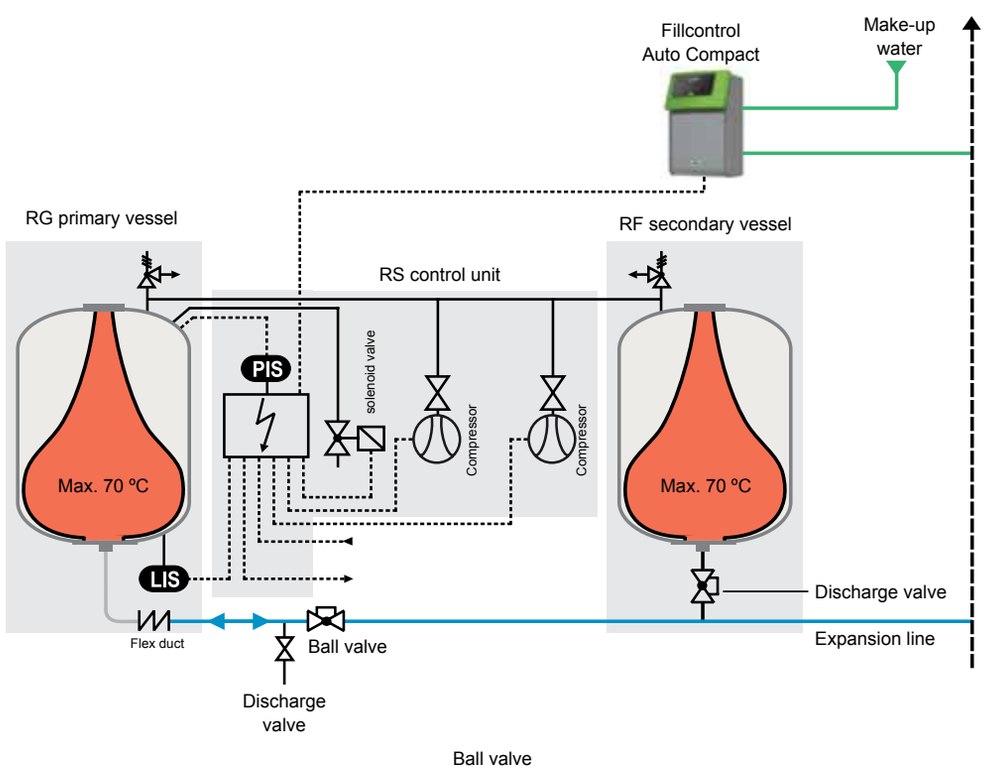

LIS Water make-up

Water make-up in the event of system-based water losses is integrated into the Reflexomat controls. It is performed based on the filling level in the basic vessel. The level measurement is carried out by evaluating the weight of the basic vessel. The solenoid valve for water make-up and the Reflex Fillset with water meter and system separator can be ordered optionally. Water make-up is monitored by a leakage monitor and interrupted in the event of any malfunctions. The signals of a contact water meter can be evaluated (Reflex Fillset with contact water meter). The Reflex Fillcontrol Auto make-up station with integrated pump is available for very high system pressures.

Reflexomat Working Principle

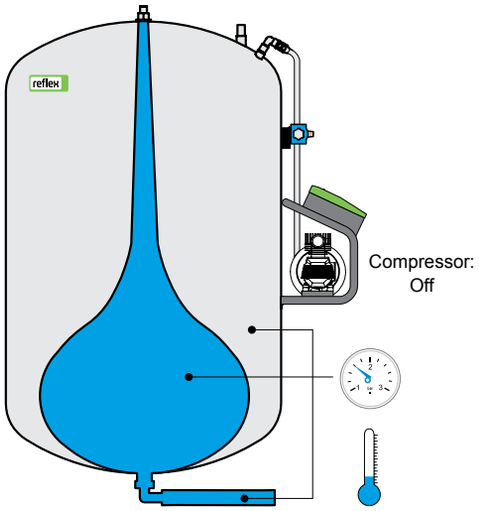

1. Low Temperature
The unit contains a small amount of water. The unit is in rest.

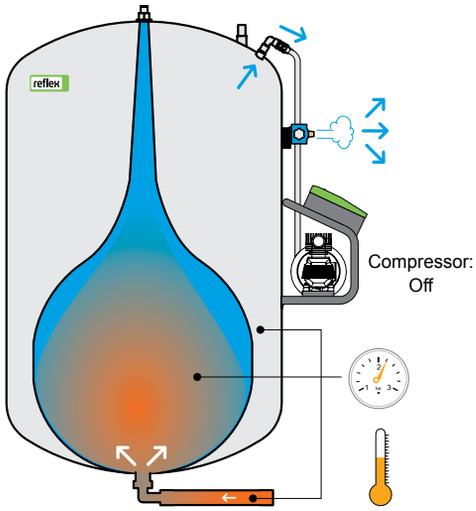

2. Temperature increase
The volume of water, and thus the system pressure, increases. The controller responds to this by discharging air from the vessel and, as a result, the expansion water flows into the bladder.

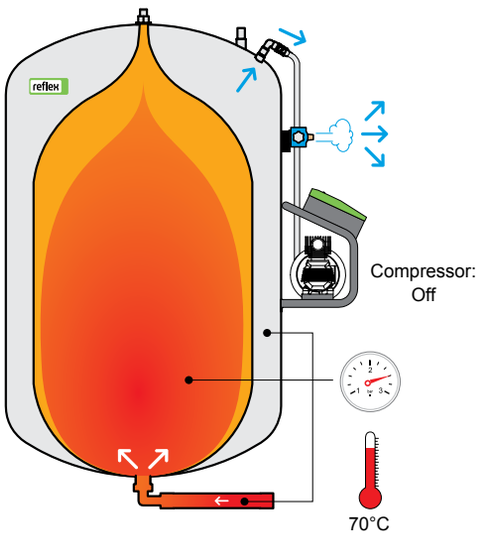

3. Full power
By storing increasing amounts of water in the vessel the controller keeps the system pressure at a constant level. When the system has warmed up completely, the vessel will be almost full to capacity.

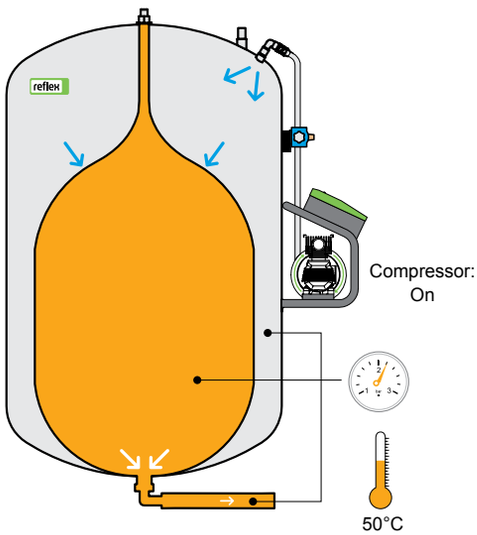

4. Cooling down
When the volume of water and thus the system pressure decreases, the controller will respond by increasing the airpressure in the vessel with displacement of water back into the system as a result. This restores equilibrium in the system pressure.

Reflexomat Compact

- Compact Compressor-controlled pressurisation unit for heating and chilled water systems
  Air cushion compartment has anti-corrosion lining
- Compact design
- Meets or exceeds EC norms for pressure vessels 97/23/EC
- **Butyl** diaphragm according to DIN EN 13831 norm part 3, max. operating temperature 70°C
- Maintains the pressure level within +/- 0.1 bar boundary
- Design pressure 6 bar
- Max. system flow temperature 120°C*
- Degree of protection: IP 54
- With Control Basic
- Power supply 230 V
- 1 dry contact (BMS common fault signal)
- Featuring RS 485 interface
- Minimat, now with it's new name Reflexomat Compact



CE

	Type	Article No	Material Group	Ø D mm	H mm	h mm	System Connection	Weight
Formerly Minimat	RC 200	8806405	31	634	1320	135	R 1	52.0
	RC 300	8801705	31	634	1620	135	R 1	69.0
	RC 400	8802805	31	740	1620	135	R 1	80.0
	RC 500	8803705	31	740	1745	135	R 1	93.0

V_n Nominal Volume [litres]

Reflexomat Compact With Make-up System

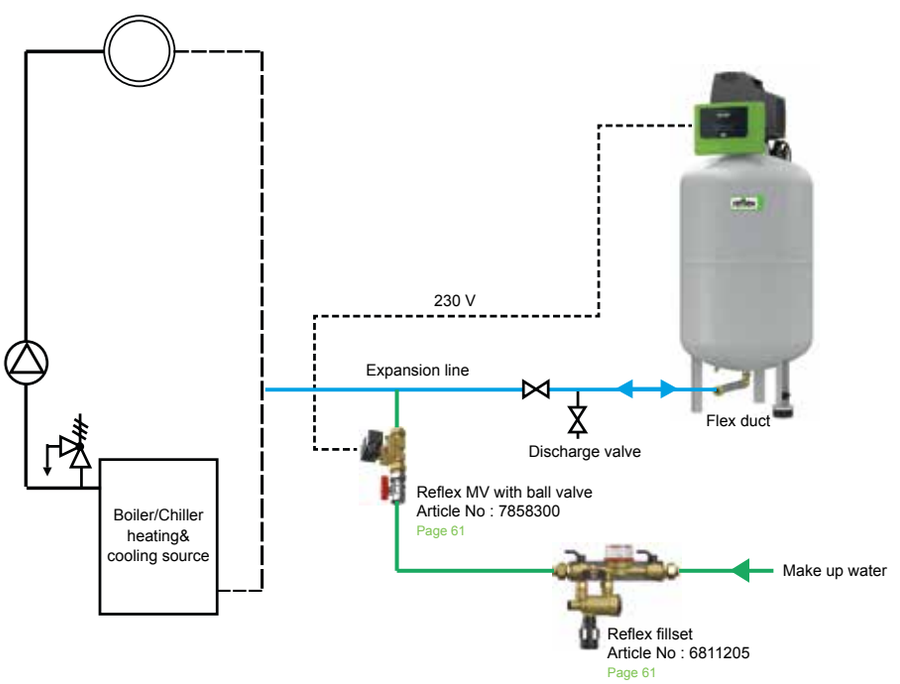

Reflexomat Compact with replenish

Reflexomat Compact in combination with MV (solenoid valve) and Fillset RPZ valve. If the water level in the vessel drops to a critical level, an appropriate amount of water will be filled into the unit from the water mains. MV solenoid valve to be connected to the control unit to have signal for replenish.

The Fillset RPZ valve protects against backflow, providing protection against the contamination of mains cold water supply according to EN1717.

Reflexomat - Compressor - Controlled Dynamic Pressure Maintenance

- Compressor-controlled pressurisation system for heating and chilled water systems up to 120°C max. flow temperature
- Maintains the pressure level within +/- 0.1 bar boundary
- Meets or exceeds EC norms for pressure vessels 97/23/EC
- Superior quality butyl bladder according to German DIN EN 13831 norm part 3, max. operating temperature 70°C
- Microprocessor control with display in 8 languages
- Permanent display of system pressure and tank volume level
- 230 V output for fully automated water make-up
- 2 dry contacts (common fault, min. water level)
- Data output through RS-485 (from VS 90/2 and VS 150)
- Durable epoxy coating with attractive new colour



Reflexomat 200-600



Reflexomat RS 300/1 RG 1000



Reflexomat, Degassing and Water Make-up With Servitec

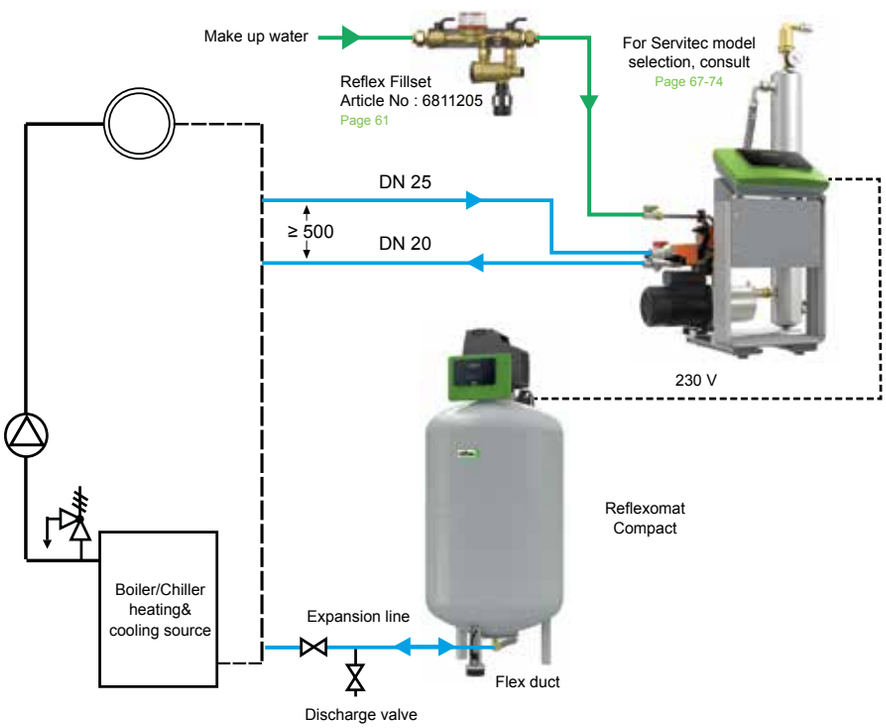

Reflexomat with Servitec

Reflexomat unit in combination with Servitec and Fillset RPZ valve. If the water level in the vessel drops to a critical level, an appropriate amount of water will be filled into the unit from the water mains via the Servitec device. By connecting the Servitec device in Levelcontrol mode to the Reflexomat control unit, make-up water is de-aerated before going into the system.

The Fillset RPZ valve protects against back-flow, providing protection against the contamination of mains cold water supply.
This combination can also be used for applications where the water supply comes from an adjacent container, as the Servitec device is self priming.

Reflexomat Control Unit

- Compressor-controlled pressurisation unit for heating and chilled water systems
- Degree of protection: IP 54
- Power supply 230/400 V
- Common fault signal and RS 485 interface
- Control Touch from RS 150 as standard, control basic S as alternative
- Control Touch: graphic menu display, permanent display of the operating parameters, extensive interfaces, e.g. for BMS connection, remote monitoring
- VS Control Unit, now with it's new name RS Control Unit



1 Compressor Unit 2 Compressor Unit

RS control unit with 1 compressor

Type	**Control Touch** Article No	**Control Basic S** Article No	Material Group	Height (H) mm	Width (W) mm	Depth (D) mm	Weight kg	Compressor
RS 90/1	8880111*	-	33	415	395	520	21.0	≤ 600 l, RS 90/1 on vessel
RS 90/1	8880211*	-	33	690	395	345	25.0	≥ 800 l, RS 90/1 adjacent
RS 150/1	8880311	8880010	33	920	395	600	28.0	adjacent
RS 300/1	8880411	8880020	33	920	395	700	34.0	
RS 400/1	8880511	8880030	33	920	395	700	51.0	
RS 580/1	8880611	8880040	33	920	395	700	102.0	

*** Control basic only**

RS control unit with 2 compressors

Type	**Control Touch** Article No	**Control Basic S** Article No	Material Group	Height (H) mm	Width (W) mm	Depth (D) mm	Weight kg	Compressor
RS 90/2	8882100	8882000	33	920	1225	800	33.0	adjacent
RS 150/2	8883100	8882010	33	920	1225	800	45.0	
RS 300/2	8884100	8882020	33	920	1225	800	61.0	
RS 400/2	8885100	8882030	33	920	1225	800	95.0	
RS 580/2	8886100	8882040	33	920	1225	800	197.0	

Voltage operation: RS 90 → 230 V/50 Hz, from RS 150 → 400 V/50 Hz

Reflexomat Control Unit Without Compressor (For On Site Compressed Air)

Type	Article No	Material Group	H/W/D (mm)*	Weight kg*
≤ 600 litre, RS 90/1	8881100	33	415/395/520	9.0
> 800 litre, RS 90/1	8881105	33	690/395/345	9.0

* Without compressor

Solenoid Valve For On-site Compressed Air

Fitted ready-to-connect in the RS 90/1 control unit without compressor

MV ¼ **Article No:** 7913000 **Material Group:** 35

Reflexomat Vessels

- Heavy duty steel tank
- Replaceable butly bladder in accordance with DIN EN 13831
- Approval in accordance with the Pressure Equipment Directive 97/23/EC
- Max. operating temperature bladder: 70°C
- Max. system flow temperature: 120°C
- Durable epoxy coating with attractive new colour

Reflexomat = RS Control unit + RG Basic vessel + Options



RG basic vessel RF secondary vessel

		RG basic vessel		RF secondary vessel (optional)							
6 bar	Type 6 Bar	h mm	Article No	h1 mm	Article No	Article Group	Ø D mm	H mm	Connection	HG mm	Weight kg
	200	115	8799100	155	8789100	30	634	970*	R 1	1350	42.8
	300	115	8799200	155	8789200	30	634	1270*	R 1	1650	60.7
	400	100	8799300	140	8789300	30	740	1255*	R 1	1640	69.4
	500	100	8799400	140	8789400	30	740	1475*	R 1	1860	78.7
	600	100	8799500	140	8789500	30	740	1720*	R 1	2110	90.1
	800	100	8799600	140	8789600	30	740	2185	R 1	-	110.3
	1000	195	8650105	305	8652005	32	1000	2025	DN 65	-	308.6
	1500	185	8650305	305	8652205	32	1200	2025	DN 65	-	328.0
	2000	185	8650405	305	8652305	32	1200	2480	DN 65	-	380.0
	3000	220	8650605	334	8652505	32	1500	2480	DN 65	-	795.0
	4000	220	8650705	334	8652605	32	1500	3065	DN 65	-	1.188.0
	5000	220	8650805	334	8652705	32	1500	3590	DN 65	-	1.115.0
10 bar	**350**	**190**	**8654000**	**190**	**8654300**	**30**	**750**	**1340**	**DN 40**	**-**	**230.0**
	500	**190**	**8654100**	**190**	**8654400**	**30**	**750**	**1600**	**DN 40**	**-**	**275.0**
	750	**180**	**8654200**	**180**	**8654500**	**30**	**750**	**2185**	**DN 50**	**-**	**345.0**
	1000	**165**	**8651005**	**285**	**8653005**	**32**	**1000**	**2065**	**DN 65**	**-**	**580.0**
	1500	**165**	**8651205**	**285**	**8653205**	**32**	**1200**	**2055**	**DN 65**	**-**	**800.0**
	2000	**165**	**8651305**	**285**	**8653305**	**32**	**1200**	**2515**	**DN 65**	**-**	**960.0**
	3000	**195**	**8651505**	**310**	**8653505**	**32**	**1500**	**2520**	**DN 65**	**-**	**1.425.0**
	4000	**195**	**8651605**	**310**	**8653605**	**32**	**1500**	**3100**	**DN 65**	**-**	**1.950.0**
	5000	**195**	**8651705**	**310**	**8653705**	**32**	**1500**	**3630**	**DN 65**	**-**	**2.035.0**

* Height, with RS 90/1 control unit included

Commissioning by Reflex - After Sales Service (Option)

Single compressor system **Article No:** 7945600
Double compressor system **Article No:** 7945630

Wall Bracket (Option)

- Wall mount facility for the RS 90/1 control unit in conjunction with RG 200, RG 300, RG 400, RG 500 and RG 600 expansion vessels (observe installation height H/HG)
- Incl. 3 m long connection hoses

Article No : 7881900 **Material Group :** 35



I / O Modules

- 2 x additional analogue outputs for system pressure and expansion vessel content monitoring
- 6 x freely programmable digital inputs
- 6 x freely programmable volt free outputs

Article No : 8858405 **Material Group :** 35



MBM II Bladder Rupture Detector

- For the signalling of bladder rupture in Reflexomat expansion
- Consists of a factory-mounted electrode and a relay
- Power supply 230 V / 50 Hz supply
- Three terminal dry contact
- Recommended: 1 device for each vessel

Article No : 7857700 **Material Group :** 86



Relay
For on site mounting



Electrode
Factory mounted

Bus Modules

- For data exchange between the Reflexomat unit (via RS 485) and BMS

LonWorks Digital	**Article No :** 8860000	**Material Group :** 86
LonWorks	**Article No :** 8860100	**Material Group :** 86
Profi bus-DP	**Article No :** 8860200	**Material Group :** 86
Ethernet	**Article No :** 8860300	**Material Group :** 86



Master - Slave Connection

- Software tool for operating up to 10 Reflexomats in a hydraulic group to a distance of 1000 m

Article No : 7859000 **Material Group :** 35

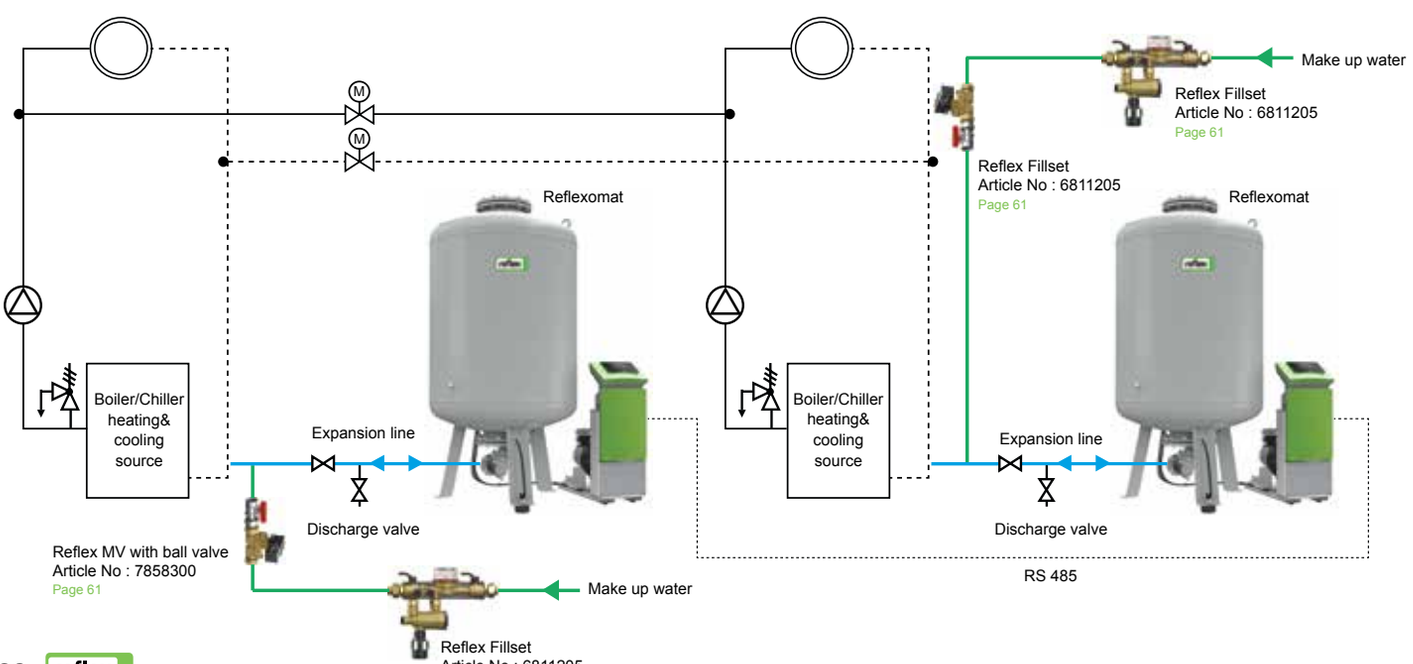

Options

Reflex MV Solenoid Valve With Ball Valve

- For water make-up within systems which are equipped with pressurisation units
- Operates on 230 V output from pressurisation unit

Article No : 7858300 **Material Group :** 35

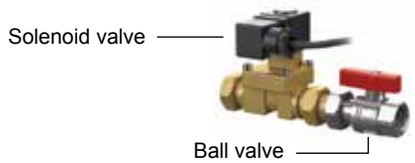

Reflex Fillset With Impuls Water Meter

- Pre-fabricated assembly for direct connection of HVAC systems to water mains
- Total quantity of make-up water is measured by a water meter
- Prevents backflow of HVAC water into the water mains
- With German DVGW-approved BA-type backflow preventer
- Including wall bracket and isolation valves

Article No : 6811205 **Material Group :** 70

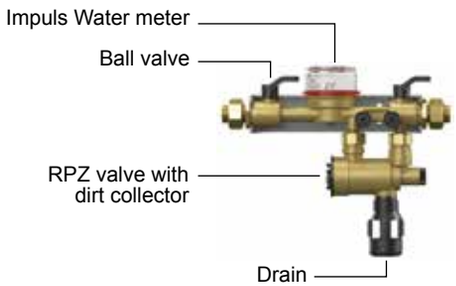

Reflexomat With Fillcontrol Auto Compact and Fillsoft II

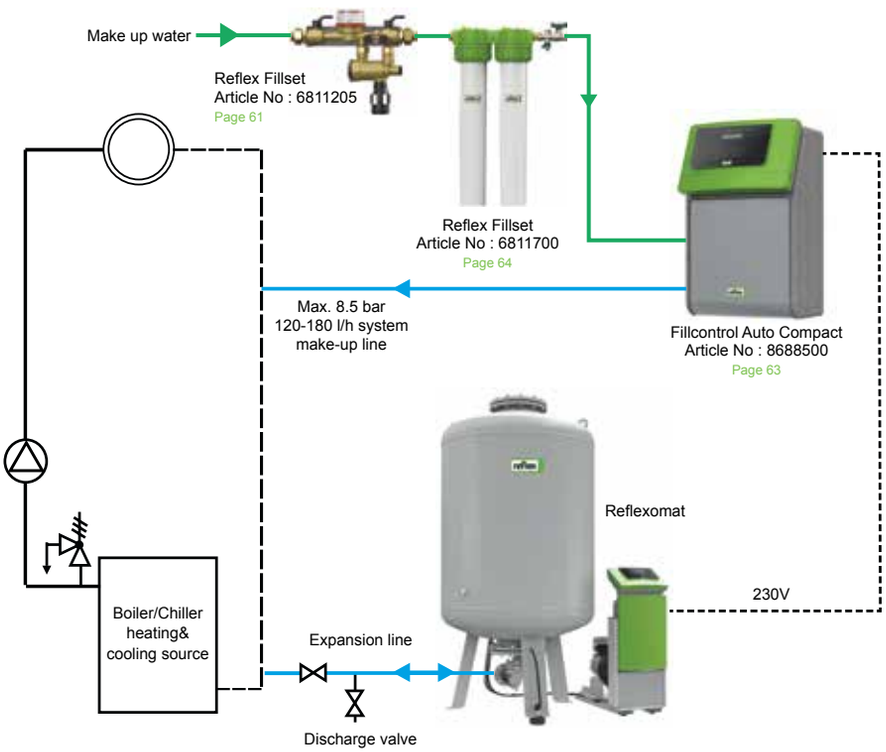

Reflexomat with Fillcontrol Auto Compact

Reflexomat unit in combination with Fillcontrol Auto Compact, Fillsoft II and Fillset RPZ valve. If the water level in the vessel drops to a critical level, an appropriate amount of water will be filled into the unit from the water mains via the Fillcontrol Auto Compact. By connecting the Fillcontrol Auto Compact make-up unit to the Reflexomat control unit, make-up water is pumped into the system, if the pressure from the water mains is below system pressure. The make-up unit also include a break tank, which providing protection against contamination. By the Fillsoft device the system water can be totally softened or adjusted to the required level. The Fillset RPZ valve protects against backflow, providing protection against the contamination of mains cold water supply according to EN1717. By connecting the impuls water meter to the Variomat control unit the Fillmeter function is available.

Reflexomat Quick Selection

1 Compressor

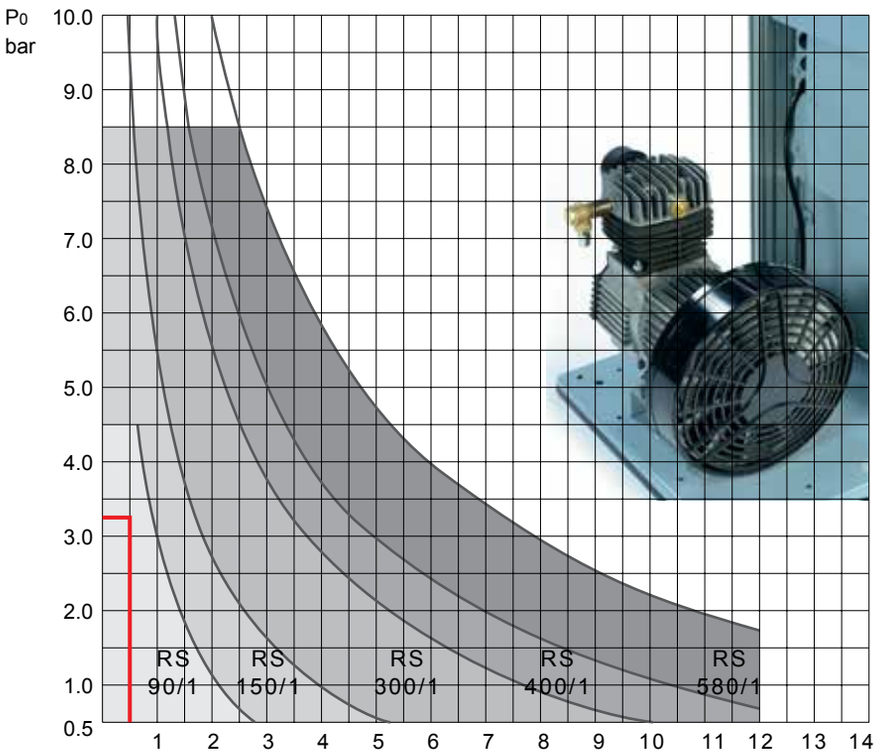

Selection Example

Output heat generator	Q	= 500 kW
Water content	VA	= 5000 litres
Design temperature	T	= 70/50 °C
Static height	Hst	= 30 m
Expansion coefficient	n	= 0.0228

$$P_0 \geq \frac{H_{ST}\,[m]}{10}\ \text{bar} + 0.2\ \text{bar}$$

$$P_0 \geq \frac{30}{10}\ \text{bar} + 0.2\ \text{bar} = 3.2\ \text{bar}$$

$$V_n \geq \frac{V_{ex} + V_{WR}}{F_{acc}}$$

$$V_n \geq \frac{5000 \times (0.0228 + 0.005)}{0.9} = 155\ \text{liter}$$

Selected:

Control unit	RS 90/1
Expansion vessel	RG 200
SU Lock shield	R 1x1

2 Compressors

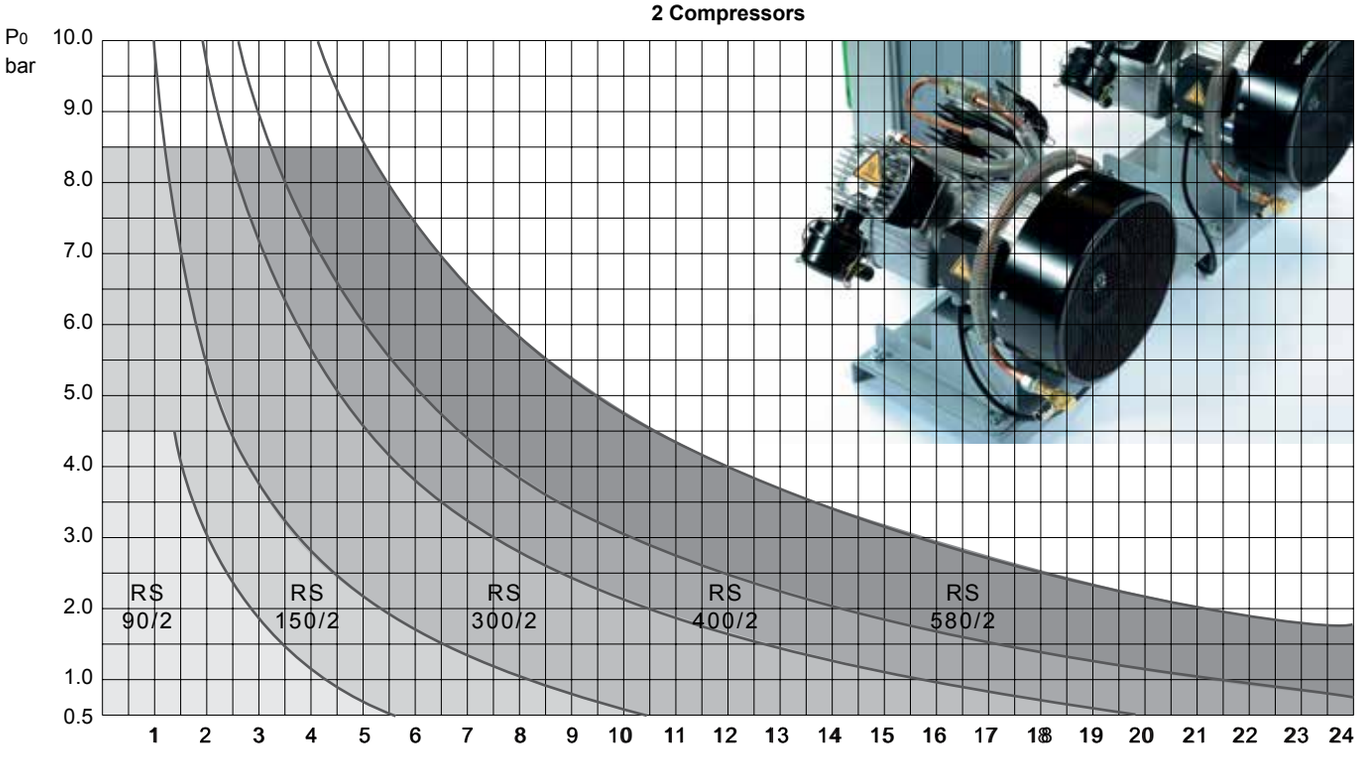

Variomat

Pump Controlled Pressurisation Systems

- Pressure maintenance
- Deaeration
- Water make-up



Control Unit

Control Basic



- 2-line LCD display
- 8 control keys
- 2 status displays
- Integrated control of system pressure, deaeration and water make-up
- Manual and automatic operation
- Common fault output signal
- Input, for contact water meter
- RS-485 interface

Control Basic S



- 2-line LCD display
- 2 status displays
- Integrated control of system pressure, deaeration and water make-up
- Manual and automatic operation
- Input, for contact water meter
- RS-485 interface

Control Touch



- 4.3" touch screen colour display
- Graphic user interface
- Simply structured plain text menus including operating instructions and help texts
- Integrated control of system pressure, deaeration and water make-up
- Manual and automatic operation
- Permanent display of the most important operating parameters in the system diagram
- Intelligent Plug & Play operational management
- Evaluation and storage of the most important operational data
- Extensive interfaces:
  - Input, for contact water meter
  - 2 x dry contact outputs for error messages
  - 2 x analogue outputs for pressure and vessel content
  - 2 x RS-485 interfaces
  - Plugs for Bluetooth module, HMS networks and KNX module, as well as SD card



PLUS X AWARD®
achieved for:
Innovation
High Quality
Design
Ease of Use
Functionality

Variomat

Pump Controlled Pressurisation Systems

The expansion bend
guarantees the pressure compensation towards the atmosphere between the vessel wall and the diaphragm

The sounding pipe
deaeration extracts the gasses from the tank and prevents de-aeration.

The high-quality butyl bladder
protects the expansion water from a direct air admission

Heavy duty steel tank

The expansion bend
guarantees maximum operating comfort. All Reflex controls (Variomat, Variomat Giga, Reflexomat, Servitec) have been designed according to a uniform design guideline



MBM II bladder rupture detector
(option)

The pressure expansion relief at atmospheric pressure results in the deaeration of the expansion water

The connection set
connects the control unit with the VG basic vessel. For 1-pump systems, the protected shut-off is integrated in the connection set. With respect to 2-pump systems, the protected shut-off is located on the control unit

The pressure cell
(level measurement) enables the determination of the vessel fill level



Pump
Most reliable and silient.
From VS 2 soft start pumps

Over-flow line
With patented motor ball-valve-Auto-function

Water make-up line
When the fill level in the VG basic vessel is too low, the solenoid valve opens. For a connection to the drinking water network, Fillset must be added

PLUS X AWARD®
achieved for:
Innovation
High Quality
Design
Ease of Use
Functionality

Variomat

Variomat Pressurisation Systems

Variomat 1 up to 2 MW with 1 pump

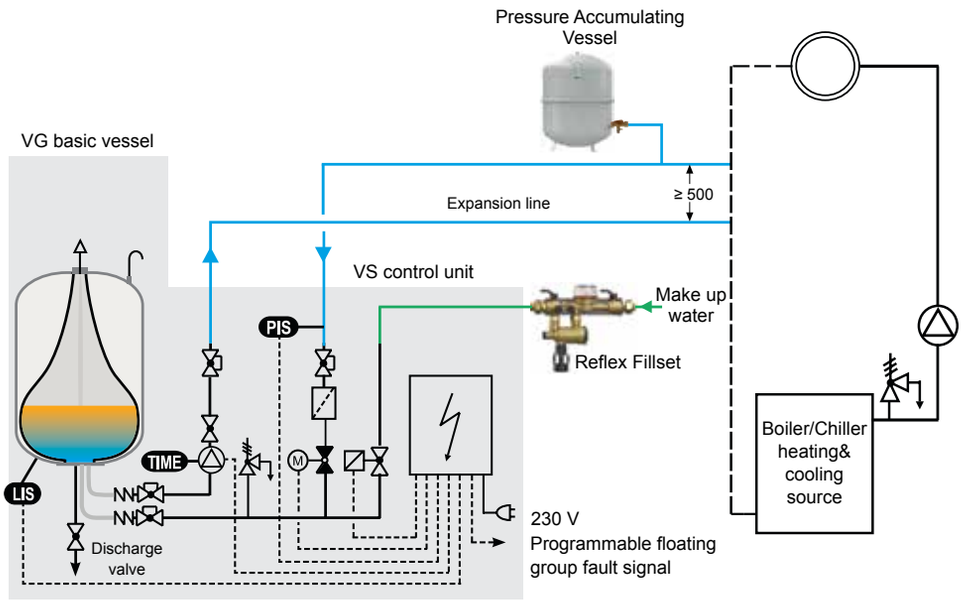

PIS Pressure maintenance, compensating for the expansion volume

The pump and overflow valve are actuated in such a way that pressure remains constant within a range of around ± 0.2 bar. The expansion water is supplied to or discharged from the depressurised basic vessel in 2 separate expansion lines.

LIS Water Make-up

The volume of discharged free gases and water losses are automatically replenished. The level measurement is carried out by evaluating the weight of the basic vessel. Water make-up based on the filling level in the basic vessel is monitored by a leakage monitor and interrupted in the event of any malfunctions. With the Variomat 2, the signals of a contact water meter can be evaluated (Reflex Fillset with contact water meter).

Variomat 2 - 1 up to 4 MW with 2 pumps

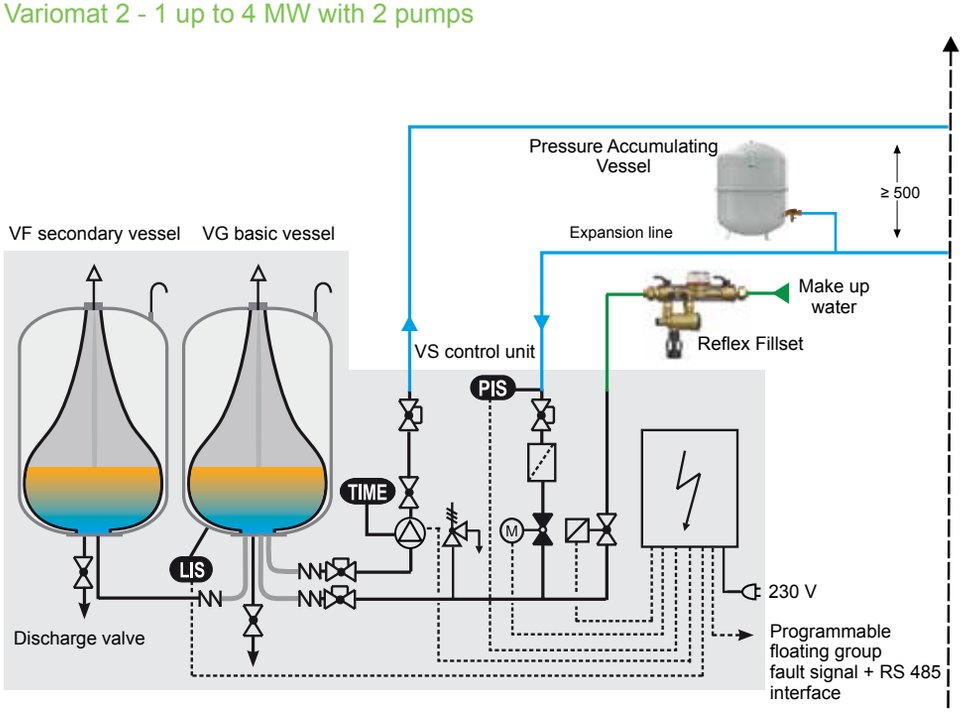

TIME Deaeration

A part flow of the heating water is released into the basic vessel and thus degassed. The deaeration mode can be selected from the following versions:

- Continuous deaeration: constant deaeration after startup and repairs in the supply system, to allow all residual air to be removed from the system.
- Follow-up deaeration: activated automatically after continuous deaeration and performed after every pump operation.
- Interval deaeration: performed after a specified schedule.

Note: The useful volume rate is 90 % for the pump controlled pressurisation units.

Therefore according to calculations the required expansion tank size is smaller than static tank size.

Variomat Working Principle

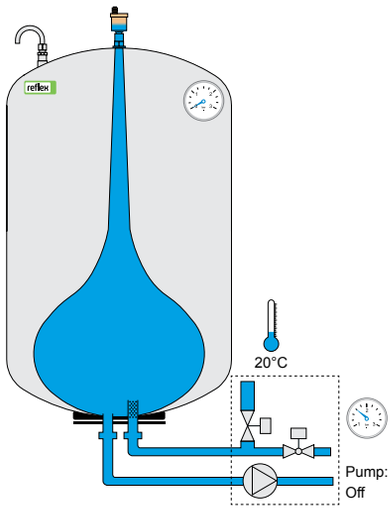

1. Low temperature
The unit contains a small amount of water. The unit is in rest.

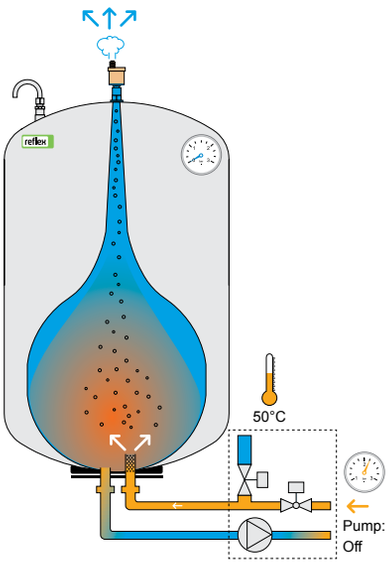

2. Temperature increase
The volume of water and the system pressure increase. The unit responses to this by opening the spill valve(s). Water flows into the pressureless vessel(s). The water in the vessel(s) is de-aerated due to the drop in pressure.

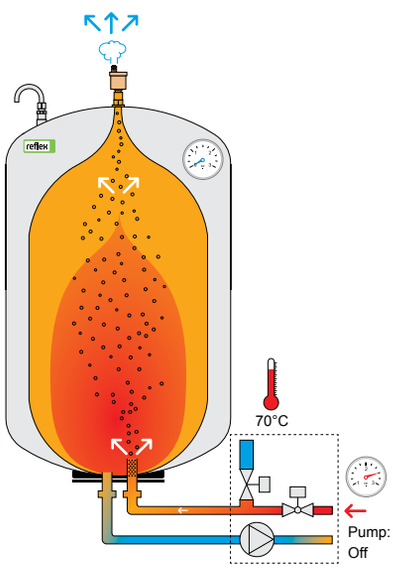

3. Full power
When the system has warmed up completely, the vessel will be almost full to capacity.

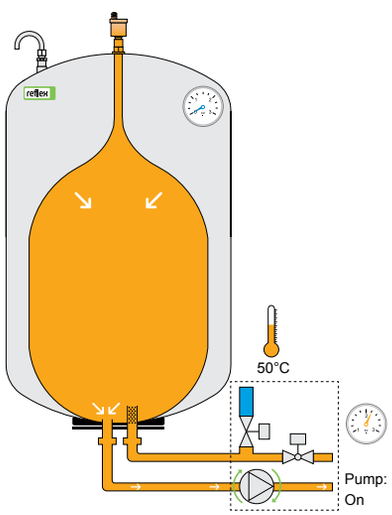

4. Cooling down
The volume of water and the system pressure decrease. The de-aerated water is pumped from the pressureless vessel back into the system. This restores the system pressure.

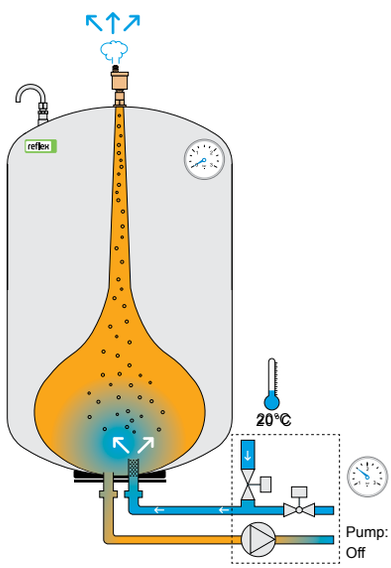

5. Replenish
If the water level in the vessel(s) drops to a critical level, an appropriate amount of water will be filled into the unit from the water mains. The water will be de-aerated (by pressure loss), before it's pumped into the system.

Variomat Control Units

- Variomat controller VS 1 with Control Basic
- From Variomat controller VS 2 with Control Touch and soft start
- Alternative, with control basic S
- Perm. advance temperature 120°C*
- Perm. operating temperature 70°C**
- Perm. ambient temperature 0 - 45°C
- Sound level approx. 55 dB
- Degree of protection: IP 54
- Water make-up connection Rp 1/2”
- Pump/overflow valve connection Rp 1/Rp 1
- Common fault signal and RS 485 interface





VS Control unit - 1 pump

Type	**Control Touch** Article No	**Control Basic S** Article No	Material Group	P_0 bar	Height mm	Width mm	Depth mm	Connection	Weight kg
VS 1	8910100*	-	38	≤ 2.5	680	530	580	2 x G 1	25.0
VS 2-1/60	8910200	8910150	38	≤ 4.8	920	470	730	2 x G 1	33.0
VS 2-1/75	8910300	8910160	38	≤ 6.5	920	530	640	2 x G 1	35.0
VS 2-1/95	8910400	8910170	38	≤ 8.0	920	530	640	2 x G 1	37.0
VS 1-1/140	8910700	8910550	38	≤ 13.5	920	530	640	2 x G 1	50.0

*** Control basic only**

Voltage operation : 230 V / 50 Hz except VS 140 ⟶ 400 V / 50 Hz





VS Control unit - 2 pumps

Type	**Control Touch** Article No	**Control Basic S** Article No	Material Group	P_0 bar	Height mm	Width mm	Depth mm	Connection	Weight kg
VS 2-2/35	8911100	8911610	38	≤ 2.5	920	700	780	2 x G 1 ¼	54.0
VS 2-2/60	8911200	8911620	38	≤ 4.8	920	700	780	2 x G 1 ¼	58.0
VS 2-2/75	8911300	8911630	38	≤ 6.5	920	720	800	2 x G 1 ¼	72.0
VS 2-2/95	8911400	8911640	38	≤ 8.0	920	720	800	2 x G 1 ¼	76.0
VS 1-2/140	8912700	8911650	38	≤ 13.5	920	720	800	2 x G 1 ¼	80.0

Variomat Pressurisation Systems

- Heavy duty steel tank
- Approval in acc. with the Pressure Equipment Directive 97/23/EC
- Replaceable **butyl** diaphragm in accordance with DIN EN 13831
- Max. system temperature 120°C
- Max. operation temperature 70°C
- Durable epoxy coating with attractive new colour



VG Basic vessel



VF secondary vessel

Variomat = VS Control unit + VG Basic vessel + Connection Set

	VG Basic vessel	VF secondary vessel						
Type	Article No	Article No	Material Group	Ø D mm	H mm	h mm	Connection	Weight kg
200	8600011	8610000	36	634	1060	146	G 1	41.4
300	8600111	8610100	36	634	1360	146	G 1	52.2
400	8600211	8610200	36	740	1345	133	G 1	72.2
500	8600311	8610300	36	740	1560	133	G 1	81.8
600	8600411	8610400	36	740	1810	133	G 1	96.8
800	8600511	8610500	36	740	2275	133	G 1	109.9
1000 Ø 740	8600611	8610600	36	740	2685	133	G 1	156.0
1000 Ø 1000	8600705	8610705	37	1000	2130	350	G 1	292.8
1500	8600905	8610905	37	1200	2130	350	G 1	320.0
2000	8601005	8611005	37	1200	2590	350	G 1	565.0
3000	8601205	8611205	37	1500	2590	380	G 1	795.0
4000	8601305	8611305	37	1500	3160	380	G 1	1080.0
5000	8601405	8611405	37	1500	3695	380	G 1	1115.0

Commissioning by Reflex - After Sales Service (Option)

Single pump system **Article No:** 7945600
Double pump system **Article No:** 7945630

Variomat Connection Set

- For connecting Variomat pump systems to VG basic vessels with protected shut-offs and screw connections





Variomat Connection set - 1 pump

VG vessel (Ø/mm)	Article No	Material Group	Weight kg
480 - 740	6940100	39	2.0
1000 - 1500	6940200	39	3.0

Variomat Connection set - 2 pumps

VG vessel (Ø/mm)	Article No	Material Group	Weight kg
480 - 740	6940300	39	2.0
1000 - 1500	6940400	39	3.0

Thermal Insulation For Variomat Vessels

- 50 mm flexible foam thermal insulation with laminated orange PE cladding with zip fastener



VG Thermal Insulation

	VW thermal insulation for VG basic vessels						
Type	Article No	Material Group	Ø D mm	H mm	h mm	Connection	Weight kg
200	7985700	N39	634	1060	146	G 1	3.0
300	7986000	N39	634	1360	146	G 1	3.5
400	7995600	N39	740	1345	133	G 1	4.5
500	7983900	N39	740	1560	133	G 1	5.5
600	7995700	N39	740	1810	133	G 1	6.0
800	7993800	N39	740	2275	133	G 1	8.0
1000 Ø 740	7993900	N39	740	2685	133	G 1	8.0
1000 Ø 1000	7986800	N39	1000	2130	350	G 1	10.0
1500	7987000	N39	1200	2130	350	G 1	12.5
2000	7987100	N39	1200	2590	350	G 1	15.0
3000	7993200	N39	1500	2590	380	G 1	16.0
4000	7993300	N39	1500	3160	380	G 1	18.0
5000	7993400	N39	1500	3695	380	G 1	24.0

Master - Slave Connection

- Software tool for operating up to 10 Reflexomats in a hydraulic group to a distance of 1000 m

Article No : 7859000 **Material Group :** 35

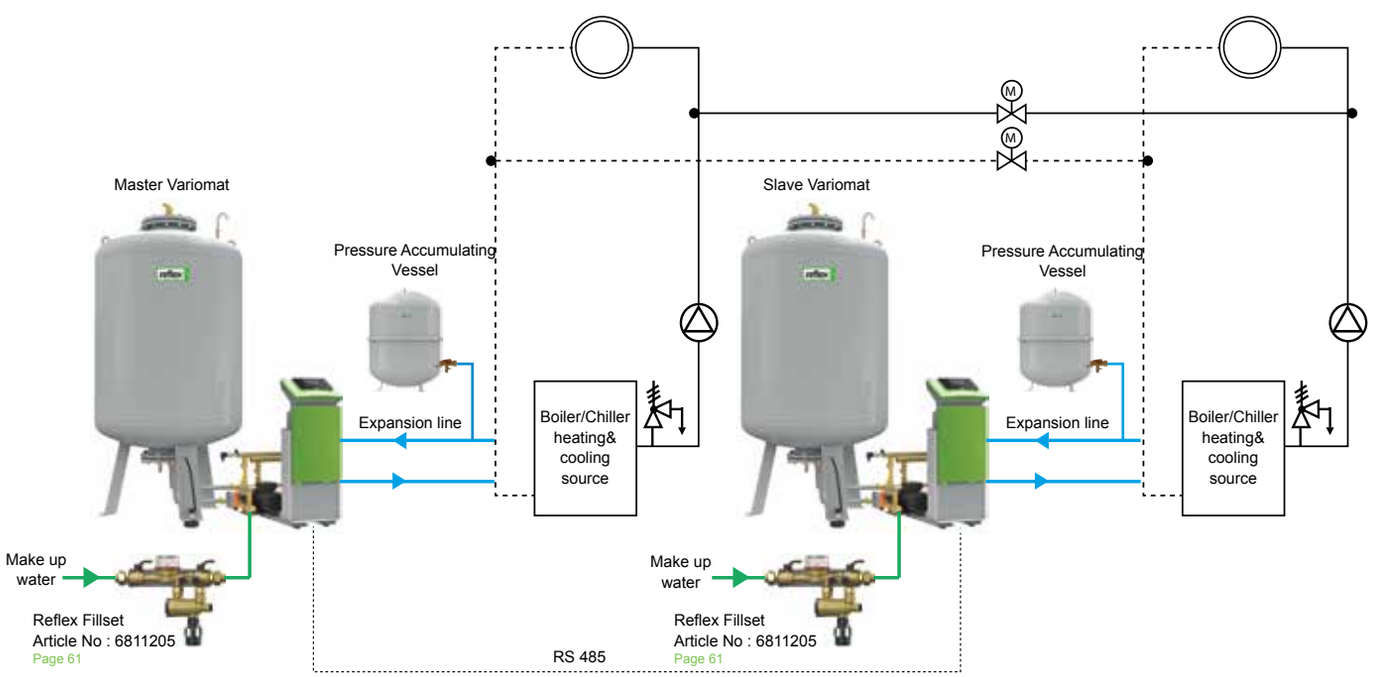

Variomat 1 water make-up with drinking water

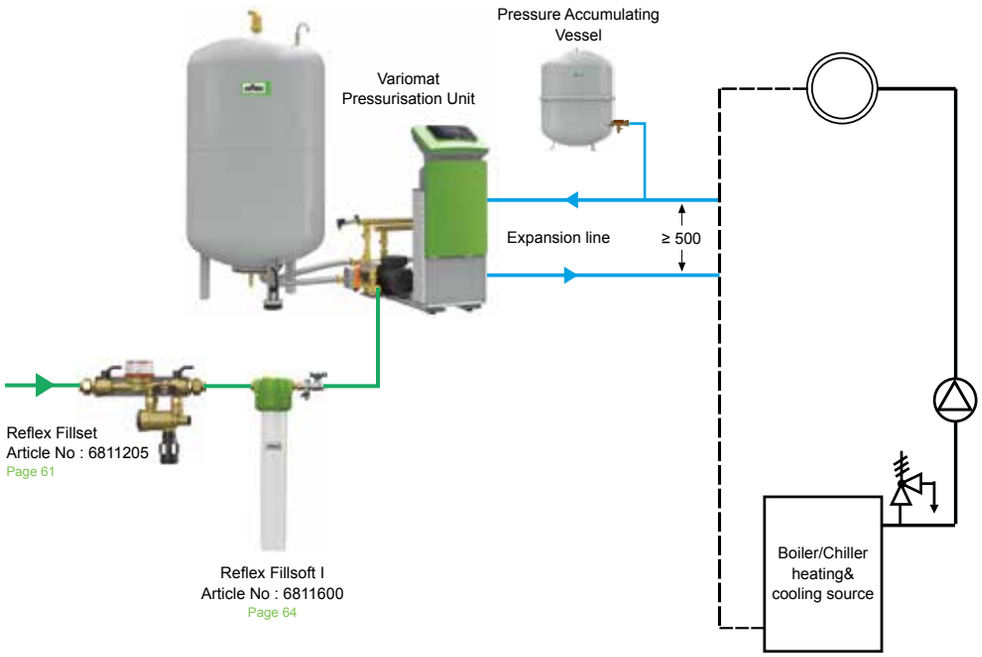

Fillsoft I

Variomat unit in combination with Fillsoft I water softening device and Fillset RPZ valve. If the water level in the vessel drops to a critical level, an appropriate amount of water will be filled into the unit from the water mains. By the Fillsoft device the system water can be totally softened or adjusted to the required level. The Fillset RPZ valve protects against backflow, providing protection against the contamination of mains cold water supply according to EN1717. By connecting the contact water meter to the Variomat control unit the Fillmeter function is available.

Variomat 2-1 water make-up via softening equipment

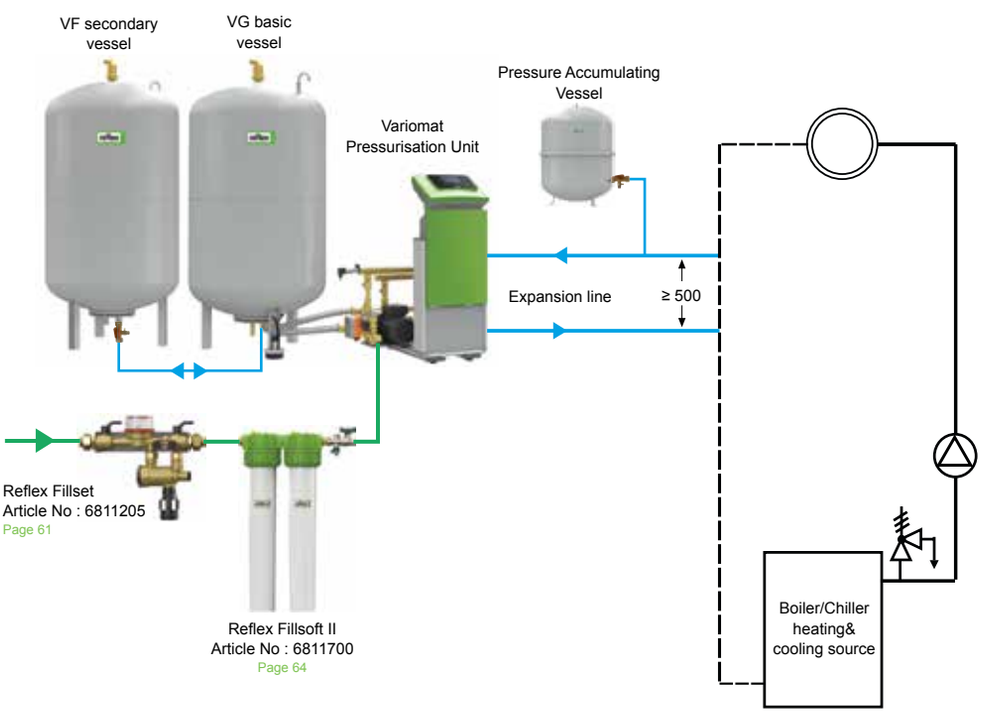

Fillsoft II

Variomat unit in combination with Fillsoft II water softening device for higher capacity and Fillset RPZ valve. If the water level in the vessel drops to a critical level, an appropriate amount of water will be filled into the unit from the water mains. By the Fillsoft device the system water can be totally softened or adjusted to the required level.

The Fillset RPZ valve protects against backflow, providing protection against the contamination of mains cold water supply according to EN1717. By connecting the contact water meter to the Variomat control unit the Fillmeter function is available.

Variomat Quick Selection

Selection Example

Output heat generator	Q	= 500 kW
Water capacity	V_A	= 5000 litres
Design temperature	T	= 70/50 °C
Static height	Hst	= 30 m
Expansion coefficient	n	= 0.0228

$$P_0 \geq \frac{H_{ST}\ [m]}{10}\ \text{bar} + 0.2\ \text{bar}$$

$$P_0 \geq \frac{30}{10}\ \text{bar} + 0.2\ \text{bar} = 3.2\ \text{bar}$$

$$V_n \geq \frac{V_{ex} + V_{rez}}{F_{acc}}$$

$$V_n \geq \frac{5000 \times (0.0228 + 0.005)}{0.9} = 155\ \text{liters}$$

Selected:

Control unit	VS 2-1/60
Expansion vessel	VG 200
Pressure Accumulating Vessel	NG 80
Connection set	G 1"
Make-up	Reflex Fillset

- For cooling water systems up to 30°C only 50% of the nominal heating power should be considered when selecting the control unit
- In performance ranges > 2 MW we recommend using double pump systems

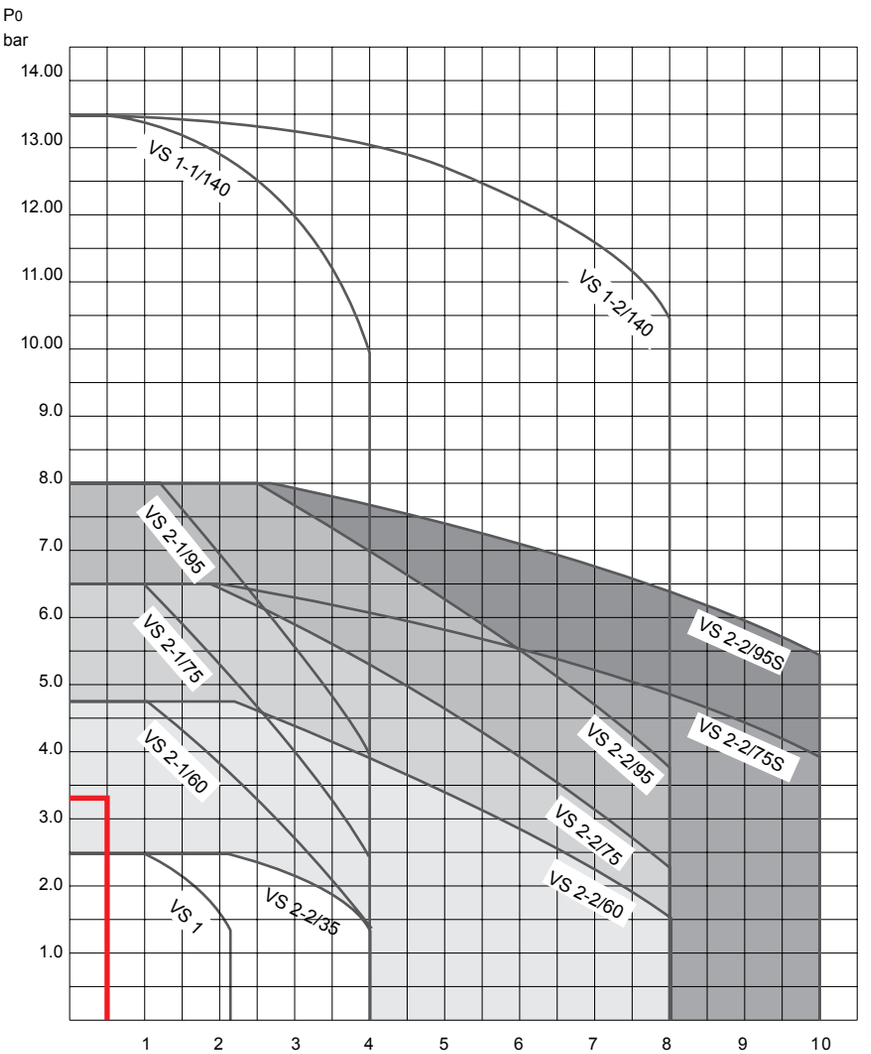

Total thermal output of the heat generation system - MW

Variomat VG - VF Vessel Sizing

- Nominal volume Vn

Approximate value from the diagram →

or

Calculation acc. to formula ↓

$$V_n \geq V_A \times \begin{matrix} 0.031 & [70°C] \\ 0.045 & [90°C] \\ 0.054 & [100°C] \\ 0.063 & [110°C] \end{matrix}$$

Setting flow temperature ↑

Vn = Nominal volume, liter

V_A = System water content , liter

- The nominal volumes can be distributed to several vessels (VG basic vessel and VF secondary vessel).

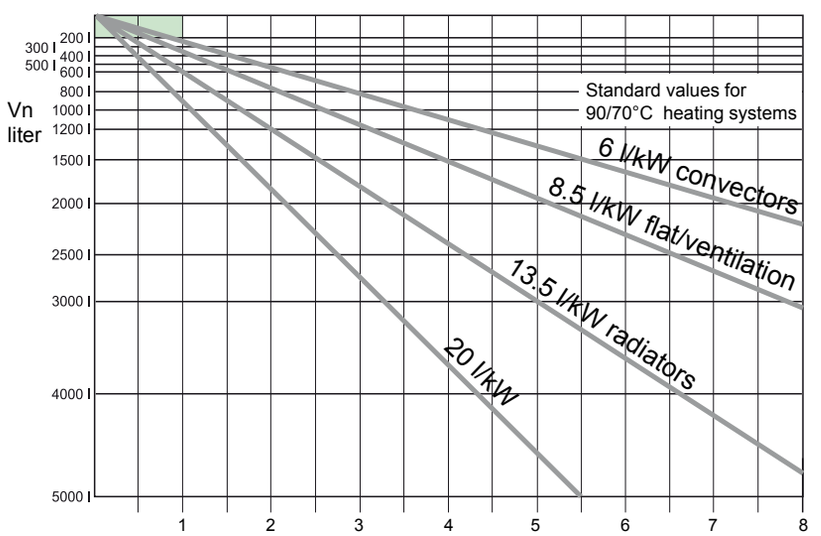

Total thermal output of the heat generation system - MW

Variomat Giga

Pump Control Pressurisation Systems

- Pressure maintenance
- Deaeration
- Water make-up



Control Unit

Control Basic S



- 2-line LCD display
- 2 status displays
- Integrated control of system pressure,
- deaeration and water make-up
- Manual and automatic operation
- Input, for contact water meter
- RS-485 interface

Control Touch



- 4.3" touch screen colour display
- Graphic user interface
- •Simply structured plain text menus including operating instructions and help texts
- Integrated control of system pressure, deaeration and water make-up
- Manual and automatic operation
- Permanent display of the most important operating parameters in the system diagram
- Intelligent Plug & Play operational management
- Evaluation and storage of the most important operational data
- Extensive interfaces:
  - Input, for contact water meter
  - 2 x dry contact outputs for error messages
  - 2 x analogue outputs for pressure and vessel content
  - 2 x RS-485 interfaces
  - Plugs for Bluetooth module, HMS networks and KNX module, as well as SD card





PLUS X AWARD®
achieved for:
Innovation
High Quality
Design
Ease of Use
Functionality

Variomat Giga

Pump Control Pressurisation Systems

The expansion bend
ensures the pressure compensation towards the atmosphere between reservoir wall and diaphragm.

GH Hydraulics
The 10 design models of the GH hydraulic system allows the hydraulic adjustment to the most different systems and environments.

GS Control unit
The GS control in 6 basic models ensures an excellent operating comfort. All reflex controls have been designed according to a uniform design guide line.





The sounding pipe
deaeration extracts the gasses from the tank and prevents a de-aeration.

The high-quality butyl bladder
protects the expansion water from direct air admission.



MBM II bladder rupture detector
(option)

The flex-connection
for the expansion line is required for the proper function of the level measurement.

The pressure cell
(level measurement) allows to determine the reservoir level.

Over-flow line
with patented motor ball-valve-auto function

Min. press. limiter

Connection
Expansion line DN 80/PN 16
Dimensioning

Shut-off
protected against inadvertent closing

Throttle valve



Safety valve
for protection of the GG and GF vessels

Water make-up solenoid valve

Connection
GG Basic vessel DN 80/PN 6

Most reliable, silent pumps with soft start feature

Variomat Giga

Variomat Giga Pressurisation Systems

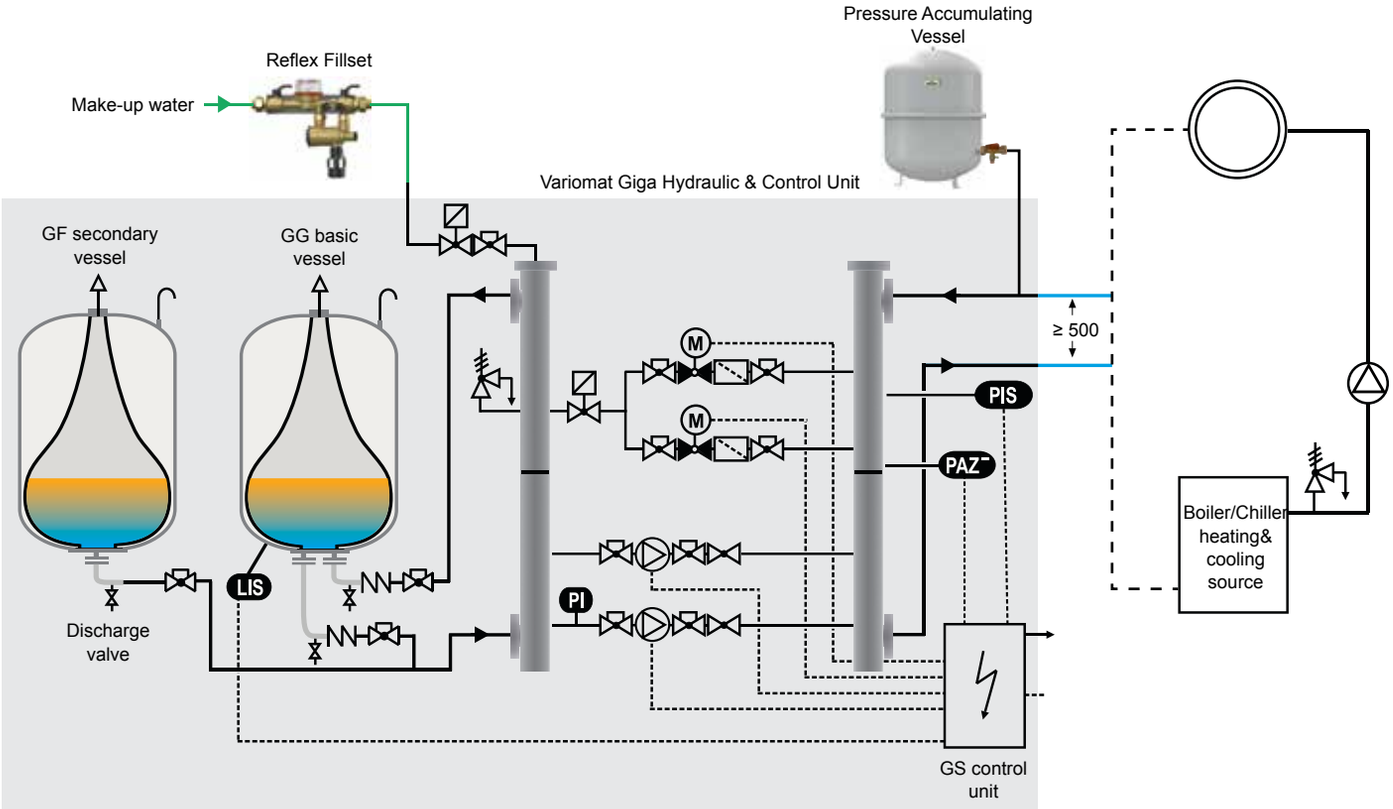

PIS Pressure maintenance, compensating for the expansion volume

The two pumps and two motorised ball valves are actuated in such a way that pressure remains constant within a range of around ± 0.2 bar. The expansion water is supplied to or discharged from the depressurised basic vessel in 2 separate expansion lines.

LIS Water make-up

The volume of discharged free gases and water losses are automatically replenished. The level measurement is carried out by evaluating the weight of the basic vessel. Water make-up based on the filling level in the basic vessel is monitored by a leakage monitor and interrupted in the event of any malfunctions. With the Variomat 2, the signals of a contact water meter can be evaluated (Reflex Fillset with contact water meter).

TIME Deaeration

A part flow of the heating water is released into the basic vessel and thus degassed. The deaeration mode can be selected from the following versions:

Continuous deaeration: constant deaeration after startup and repairs in the supply system, to allow all residual air to be removed from the system.

Follow-up deaeration: activated automatically after continuous deaeration and performed after every pump operation.

Interval deaeration: performed after a specified schedule.



Note: The useful volume rate is 90 % for the pump controlled pressurisation units.

Therefore according to calculations the required expansion tank size is smaller than static tank size.

Variomat Giga Working Principle

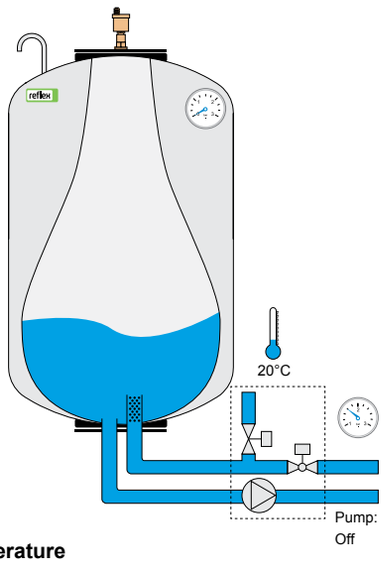

1. Low temperature
The unit contains a small amount of water. The unit is in rest.

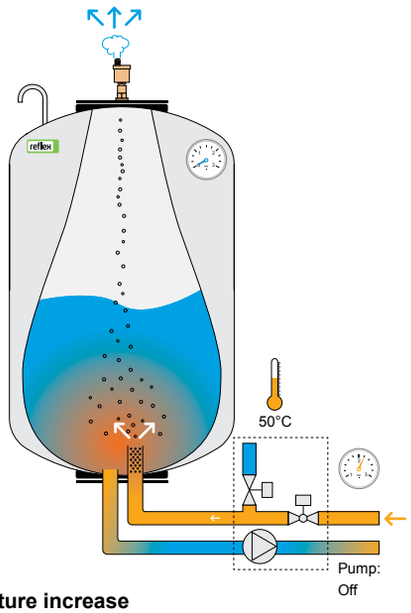

2. Temperature increase
The volume of water and the system pressure increase. The unit responses to this by opening the spill valve(s). Water flows into the pressureless vessel(s). The water in the vessel(s) is de-aerated due to the drop in pressure.

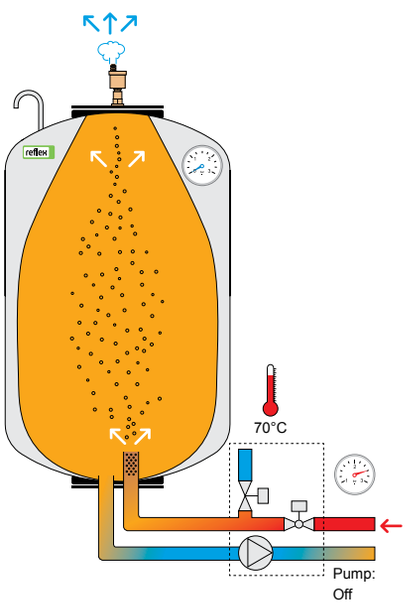

3. Full power
When the system has warmed up completely, the vessel will be almost full to capacity.

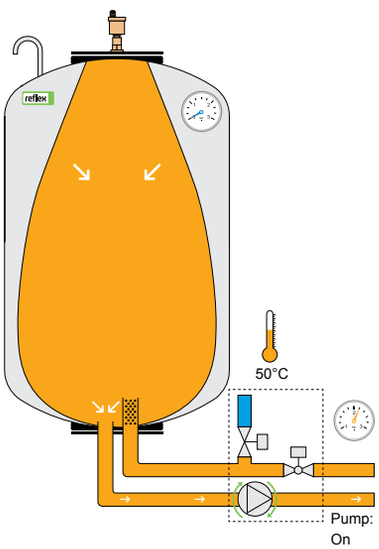

4. Cooling down
The volume of water and the system pressure decrease. The de-aerated water is pumped from the pressureless vessel back into the system. This restores the system pressure.

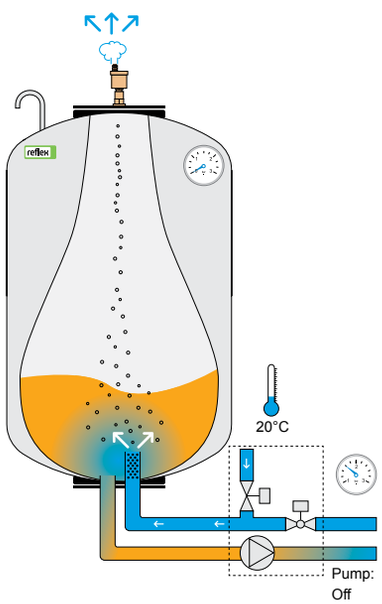

5. Replenish
If the water level in the vessel(s) drops to a critical level, an appropriate amount of water will be filled into the unit from the water mains. The water will be de-aerated (by pressure loss), before it's pumped into the system.

Variomat Giga Control Systems

- Pump-controlled pressurisation system with integral water-make-up and deaeration (RL ≤ 70°C) for heating and cooling water systems
- With 2 pumps and 2 overflow valves
- Max. excess operating pressure 16 bar
- Max. system temperature 120°C*
- Max. operating temperature 0–70°C**
- Sound level approx. 55 dB
- Pump connection DN 80/PN 16
- Basic vessel connection DN 80/PN 6
- Water make-up connection Rp 1/2
- Control Touch as standard, alternative Control Basic S
- Gigamat, now with it's new name Variomat Giga



Variomat Giga Control Unit

Control Module

Type	**Control Touch** Article No	**Control Basic S** Article No	Material Group	Electrical Power kW	Voltage	Hydraulic Module	Height mm	Width mm	Depth mm
GS 1.1	8912500	8912500	38	2.20	230 V/50 Hz	GH 50/GH 70	1200	1170	1020
GS 3	8912600	8912600	38	6.60	400 V/50 Hz	GH 90/GH100	1200	1170	830

Hydraulic Module

Type	Article No	Material Group	P_0	Height mm	Width mm	Depth mm
GH 50	8931000	38	≤ 4.0	1200	1170	830
GH 70	8932000	38	≤ 6.0	1200	1170	830
GH 90	8931400	38	≤ 8.0	1200	1170	830
GH 100	8931200	38	≤ 9.5	1200	1170	830

Note: For bigger capacities models GH 110/130/140/150 could be selected (Page 58)

P0 = Setting value on the control
= static height + evaporation pressure + 0.2 bar (recommended)

* According to maximum possible setting value - Temperature control 105°C, in accordance with DIN EN 12828
** Installation in the system return, diaphragm load of expansion vessels max. 70°C. Please consult us for permanent temperatures of ≤ 0°C

Variomat Giga Tanks

- Heavy duty steel tank
- Approval in acc. with the Pressure Equipment Directive 97/23/EC
- Replaceable **butyl** diaphragm in accordance with DIN EN 13831
- Max. system temperature 120°C
- Max. operation temperature 70°C
- Max. operating pressure 16 bar
- Durable epoxy coating with attractive new colour

Variomat Giga = GS Control unit / GG Basic vessel + GH hydraulic module



GG Basic vessel



GF secondary vessel

	GG Basic vessel	GF secondary vessel							
Type	Article No Grey	Article No Grey	Material Group	Ø D mm	H mm	h mm	h1 mm	A	Weight kg
1000	8920105	8930105	37	1000	2130	285	305	DN 65/PN 6	330.0
1500	8920305	8930305	37	1200	2130	285	305	DN 65/PN 6	465.0
2000	8920405	8930405	37	1200	2590	285	305	DN 65/PN 6	565.0
3000	8920605	8930605	37	1500	2590	314	335	DN 65/PN 6	795.0
4000	8920705	8930705	37	1500	3160	314	335	DN 65/PN 6	1.080.0
5000	8920805	8930805	37	1500	3695	314	335	DN 65/PN 6	1.115.0

Commissioning by Reflex - After Sales Service (Option)

Double pump system **Article No:** 7945630

I / O Module

- 2 x additional analogue outputs for controlling pressure and level
- 6 x freely programmable digital inputs
- 6 x freely programmable floating outputs
- Standard in the GS 3 Variomat Giga controller
- RS 485



For Variomat Article No : 8997705
For Variomat Giga Article No : 8997700

Master - Slave Connection

- Software tool for operating up to 10 Variomat systems in a hydraulic group to a distance of 1000 m

Article No : 7859100

MBM II Bladder Rupture Detector

- For the signalling of bladder rupture in Variomat Giga pressurisation systems
- Consists of a relay and a factory-mounted electrode
- Operates 230 V / 50 Hz supply
- Three terminal dry contact
- Recommended: 1 device for each vessel

Article No : 7857700



Relay
Wall mounted



Electrode
Factory mounted



Bus Modules

- For data exchange between the controller (RS 485) and the central building control system

LonWorks Digital	**Article No :** 8860000	**Material Group :** 86
LonWorks	**Article No :** 8860100	**Material Group :** 86
Profi bus-DP	**Article No :** 8860200	**Material Group :** 86
Ethernet	**Article No :** 8860300	**Material Group :** 86



The circuits must be adjusted to suit local conditions

Giga Connect

- To extend output and for parallel switching of 2 hydraulically directly connected Variomat Giga systems

On request

SV1 Safety Valve

- For additional protection of GG and GF vessels at nominal heating outputs > 10.5 MW

Article No : 6942100 **Material Group :** 81



Variomat Giga With Servitec

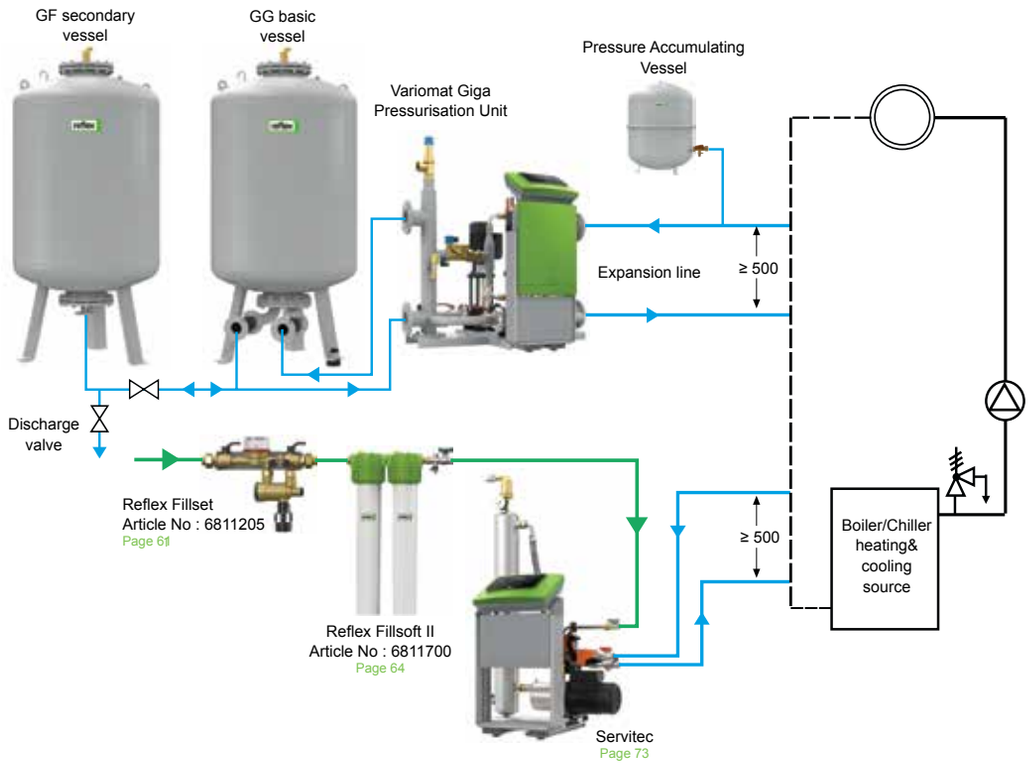

Variomat Giga unit in combination with Servitec and Fillset RPZ valve.
If the water level in the vessel drops to a critical level, an appropriate amount of water will be filled into the unit from the water mains via the Servitec device. By connecting the Servitec device in Levelcontrol mode to the Variomat Giga control unit, make-up water is de-aerated before going into the system.

The Fillset RPZ valve protects against backflow, providing protection against the contamination of mains cold water supply according to EN1717. By the Fillsoft device the system water can be totally softened or adjusted to the required level. By connecting the contact water meter to the Variomat Giga control unit the Fillmeter function is available. This combination can also be used for applications where the water supply comes from an adjacent container, as the Servitec device is self priming.

Variomat Giga With Softening Equipment

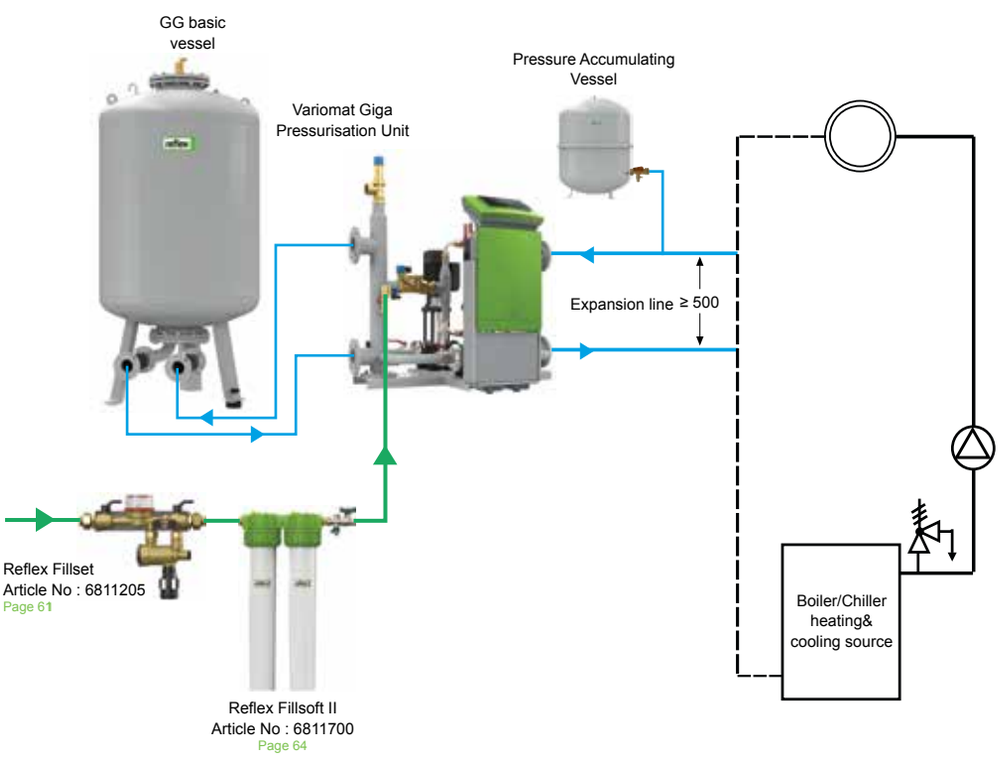

Variomat Giga unit in combination with Fillsoft II water softening device and Fillset RPZ valve. If the water level in the vessel drops to a critical level, an appropriate amount of water will be filled into the unit from the water mains. By the Fillsoft device the system water can be totally softened or adjusted to the required level.

The Fillset RPZ valve protects against backflow, providing protection against the contamination of mains cold water supply according to EN1717. By connecting the contact water meter to the Variomat control unit the Fillmeter function is available.

Variomat Giga Quick Selection

Selection Example

Output heat generator	Q	= 13 MW
Water capacity	V_A	= 50/000 litres
Design temperature	T	= 70/50 °C
Static height	Hst	= 30 m
Expansion coefficient	n	= 0.0228

$$P_0 \geq \frac{H_{ST}\ [m]}{10}\ \text{bar} + 0.2\ \text{bar}$$

$$P_0 \geq \frac{30}{10}\ \text{bar} + 0.2\ \text{bar} = 3.2\ \text{bar}$$

$$V_n \geq \frac{V_{ex} + V_{rez}}{F_{acc}}$$

$$V_n \geq \frac{50/000 \times (0.0228 + 0.005)}{0.9} = 1545\ \text{liters}$$

Selected:

Control unit	GS 1.1
Hydraulic module	GH 70
Expansion vessel	GG 2000
Make-up	Reflex Fillset

- For cooling water systems up to 30°C only 50% of the nominal heating power should be considered when selecting the control unit
- In performance ranges > 2 MW we recommend using double pump systems

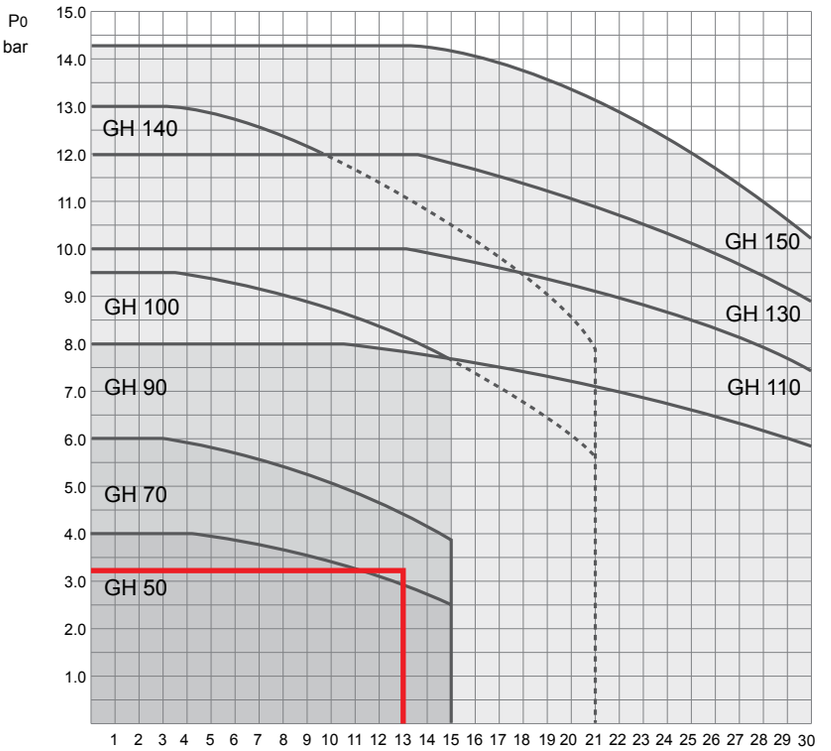

Total thermal output of the heat generation system - MW

Variomat Giga GG - GF Vessel Sizing

- Nominal volume Vn

Approximate value from the diagram →

or

Calculation acc. to formula ↓

$$V_n \geq V_A \times \begin{cases} 0.031\ [70°C] \\ 0.045\ [90°C] \\ 0.054\ [100°C] \\ 0.063\ [110°C] \end{cases}$$

Setting flow temperature ↑

Vn = Nominal volume, liter

VA = System water content , liter

- The nominal volumes can be distributed to several vessels (GG basic vessel and GF secondary vessel).

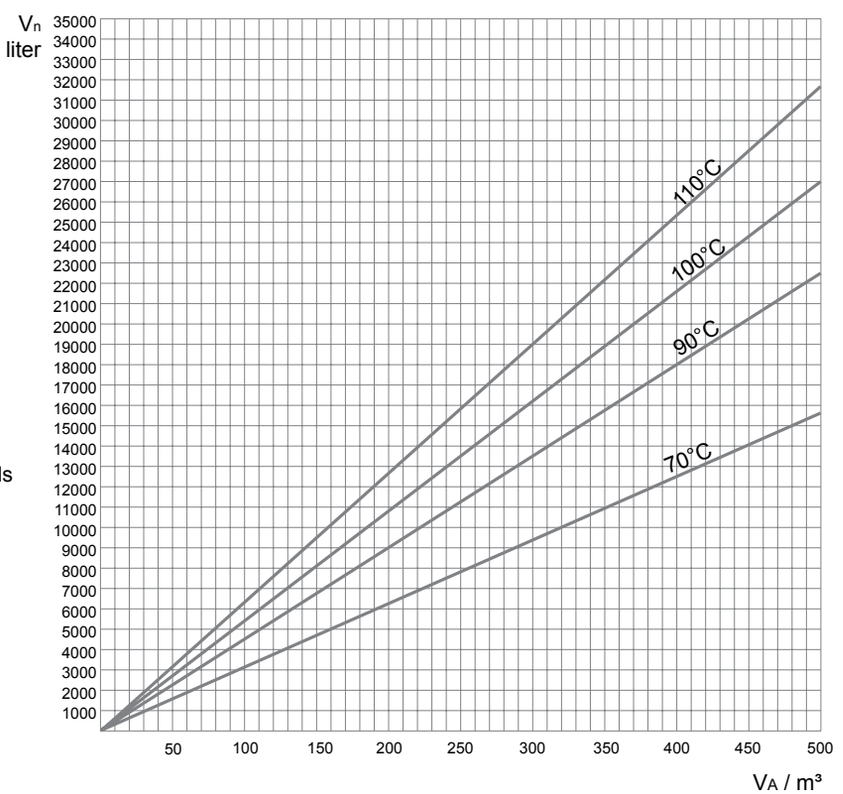

Water Make-Up Systems & Water Treatment





Overview of Reflex Water Make-up Systems

	Water make-up fittings			Automatic water make-up systems			Automatic water make-up systems with pump	
	Fillset Compact	**Fillset**	**Fillset Impuls**	**Fillcontrol Plus**	**Fill MV Selenoid**	**Fillcontrol Plus Compact**	**Fillcontrol Auto Compact**	**Fillcontrol Auto**
DVGW-approved system separation	X	X	X		X	X	5 litres System separation vessel	
KVS	1.5 m³/h	1.5 m³/h	1.5 m³/h	1.4 m³/h		0.4 m³/h	0.18 m³/h	4 m³/h
Pump	-	-	-	-	-	-	8.5 bar	5.5 bar
Integrated shut-off	X	X	X	X	X	X	X	X
Wall mount		X	X	X			X	
Automatic water make-up				Based on time, cycle or total amount			Based on time, cycle or total amount	Based on time, cycle or total amount
				Level-control on pressurisation systems		Level-control on pressurisation systems	Level-control on pressurisation systems	Level-control on pressurisation systems
				Pressure-dependent Magcontrol		Pressure-dependent Magcontrol	Pressure-dependent Magcontrol	Pressure-dependent Magcontrol
Alarm message				X		X	X	X
Water meter		X	Contact water meter					
Water softening evaluation				Contact water meter			Contact water meter	Contact water meter

Fillset

Fillset Compact

- Pre-fabricated assembly for direct connection of HVAC systems to water mains
- Prevents backflow of HVAC water into the water mains
- With German DVGW-approved BA-type backflow preventer
- Including wall bracket and isolation valves



Article no.	6811305
Material group	70
Max. operating pressure	10 bar
Max. operating temperature	60°C
Width x Height	175 x 214 mm
Weight	0.9 kg
Inlet/outlet connection	R ½ - R ½
Minimum flow pressure[1)]	P_0 + 1.3 bar
Flow coefficient[2)] kvs	0.8 m³/h
Flow coefficient[3)] kvs	0.7 m³/h

1) P_0 = Gas input pressure in expansion vessel
= minimum operating pressure of the system
2) As a single assembly
3) In conjunction with Fillcontrol Plus, Variomat, Reflexomat or Servitec

Fillset

- Pre-fabricated assembly for direct connection of HVAC systems to water mains
- Total quantity of make-up water is measured by a water meter
- Prevents backflow of HVAC water into the water mains
- With German DVGW-approved BA-type backflow preventer
- Including wall bracket and isolation valves



	Fillset with standard water meter	Fillset with impuls water meter
Article no.	6811105	6811205
Material group	70	70
Max. operating pressure	10 bar	10 bar
Max. operating temperature	60°C	60°C
Height x Width x Depth	293 x 230 mm	293 x 230 mm
Empty weight	1.7 kg	1.7 kg
Inlet/outlet connection	R ½ - R ½	R ½ - R ½
Minimum flow pressure[1)]	P_0 + 1.3 bar	P0 + 1.3 bar
Flow coefficient[2)] kvs	0.8 m³/h	0.8 m³/h
Flow coefficient[3)] kvs	0.7 m³/h	0.7 m³/h
Connection voltage	-	230 V / 50 Hz

1) P_0 = Gas input pressure in expansion vessel
= minimum operating pressure of the system
2) As a single assembly
3) In conjunction with Fillsoft

Reflex MV Solenoid Valve With Ball Valve

- For water make-up within systems which are equipped with pressurisation units (compressor controlled)
- Operates on 230 V output from pressurisation unit

Article No : 7858300 **Material Group :** 35



Fillcontrol

Fillcontrol Plus Compact

- Compact, automatic water make-up device for systems with conventional expansion vessels according to DIN 1988 and DIN EN 1717
- With system BA-type backflow preventer
- Monitored water make-up
- Dry contact (common fault)
- Input pressure max. 10 bar
- Output pressure 0.5 - 5 bar
- Flow rate ca. 0.5 m3/h at Δp = 1.5 bar
- Fillcontrol, now with it's new name Fillcontrol Plus Compact



Article no.	6811500
Material group	79
Perm. operating temperature	70°C
Height x Width x Depth	304 x 240 x 91 mm
Empty weight	3 kg
Inlet/outlet connection	R ½ - R ½
Minimum flow pressure [2]	P_0 + 1.3 bar
Output pressure [3]	0.5 - 5 bar
Input pressure	10 bar
Connection voltage	230 V/50 Hz

[1] An external pressure sensor must be used in combination with Fillsoft
[2] P0 = Pst + 0.2 (recommendation) static pressure (= stat. height [m]/10)
[3] System pressure, factory configuration 3 bar

Fillcontrol Plus - Make-up Station Without Pump

- To monitor diaphragm expansion vessels and for the automatic water make-up of the set initial pressure
- Incl. wall bracket
- With Control Basic control unit
- RS 485 interface, connection of bus/extension modules possible
- Capacity monitoring of a Fillsoft water treatment system possible



	Standard	Stainless steel
Article no.	8812100	8812200
Material group	70	70
Perm. operating temperature	90°C	90°C
Height x Width x Depth	320 x 340 x 190 mm	320 x 340 x 190 mm
Weight	2.5 kg	2.5 kg
Inlet/outlet connection	G 3/4 - G 1/2	G 3/4 - G 1/2
Perm. excess operating pressure	10 bar	10 bar
Input pressure	Max. 10 bar	Max. 10 bar
Minimum flow pressure	P0 + 1.3 bar [1]	P0 + 1.3 bar [1]
Max. normal pressure p	P0 + 4 bar [2]	P0 + 4 bar [2]
Connection voltage	230 V/50 Hz	230 V/50 Hz
Flow coefficient [3] kvs	1.4 m³/h	1.4 m³/h
Flow coefficient [4] kvs	0.7 m³/h	0.7 m³/h

[1] P_0 = Gas input pressure in expansion vessel
= minimum operating pressure of the system
[2] If exceeded, fit pressure reducing valve upstream
[3] As a single assembly
[4] In conjunction with Fillset

Fillcontrol Auto Compact - Water Make-up Station With Pump

- Fully automatic water make-up systems with integrated pump
- Fillcontrol Auto Compact with integrated intermediate tank as a means of system separation
- Systems equipped with Control Basic for simple and clear operation
- RS 485 interface, connection of bus/extension modules possible
- Capacity monitoring of a Fillsoft water treatment system possible
- Including system separation in accordance with DIN 1988 and DIN EN 1717 with Fillcontrol Auto Compact



Fillcontrol Auto Compact

	Fillcontrol Auto Compact
Article no.	8688500
Material group	70
Perm. excess operating pressure	10 bar
Perm. operating temperature	30°C
Height x Width x Depth	620 x 580 x 290 mm
Weight	17.5 kg
Pump pressure	Max. 8.5 bar[1)]
Heating connection	G ½
Potable water connection	G ½
Overflow connection	DN 32
Supply pressure max.	Max. 5.5 bar
Delivery rate	120 - 180 l/h[2)]
Req. Feed capacity	360 l/h
Suction connection at tank	-

[1)] Without water volume
[2)] If exceeded, fit pressure reducing valve upstream

Fillcontrol Auto - Water Make-up Station With Pump

- Fully automatic water make-up systems with integrated pump
- Fillcontrol Auto for water make-up, e.g. from containers or conditioning systems
- Systems equipped with Control Basic for simple and clear operation
- RS 485 interface, connection of bus/extension modules possible
- Capacity monitoring of a Fillsoft water treatment system possible
- Fillcontrol Auto for applications suitable for max. 50 % anti-freeze



Fillcontrol Auto

	Fillcontrol Auto for use with anti-freeze
Article no.	8812300
Material group	70
Perm. excess operating pressure	8 bar
Perm. operating temperature	30°C
Height x Width x Depth	690 x 470 x 440 mm
Weight	25 kg[1)]
Pump pressure	Max. 5.5 bar
Heating connection	G 1
Potable water connection	-
Overflow connection	-
Supply pressuremax.	-
Delivery rate	4 m³/h
Req. Feed capacity	360 l/h
Suction connection at tank	1 1/4

[1)] Without water volume

Fillsoft

Fillsoft I / II Water Treatment Systems

This softening unit is available in two basic versions, depending on the required capacity: Fillsoft I with one or Fillsoft II with two resin cartridges.

- Water softening device for initial filling and water make-up in heating systems
- Fillsoft I: Soft water capacity 6000 l x °dH
- Fillsoft II: Soft water capacity 12000 l x °dH
- Incl. shut-off with sample cock and segment connection*
- Fillset I incl. flow limiter



Fillsoft I



Fillsoft II

	Fillsoft I	Fillsoft II
Article no.	6811600	6811700
Material group	78	78
Perm. excess operating pressure	8 bar	8 bar
Perm. operating temperature	40°C	40°C
Height 600 mm600 mm	600 mm	600 mm
Width	260 mm	380 mm
Max. continuous flow	0.4 m3/h	0.4 m3/h
Weight	4.1 kg	7.6 kg
Inlet/outlet connection	Rp 1/2 - Rp 1/2	Rp 1/2 - Rp 1/2
Capacity	11.500 l x °F	21.000 l x °F

The benefits of Fillsoft in detail:

- Well thought-out complete program for water softening
- Simple installation, both as a stand-alone unit and also linked to a Fillcontrol water make-up solution
- Durable, efficient heat transfer, as limescale build-up on boiler surfaces is prevented
- Long-term protection of your system, as partial thermal and mechanical overloading by lime scale build-up is avoided
- Maximum operational safety, as the system's pH remains stable even if incorrectly operated
- Ease of handling by simple cartridge replacement and disposal of used cartridges with household waste

Accessories



Softmix
Article No : 9119219
Material Group : 78



External pressure sensor
Article No : 9112004
Material Group : 86



Fillmeter
Article No : 9119193
Material Group : 78



Total hardness testing kit
Article No : 6811900
Material Group : 86



Fillsoft cartridge
Article No : 6811800
Material Group : 86

G-vessel with Fillcontrol Plus Compact

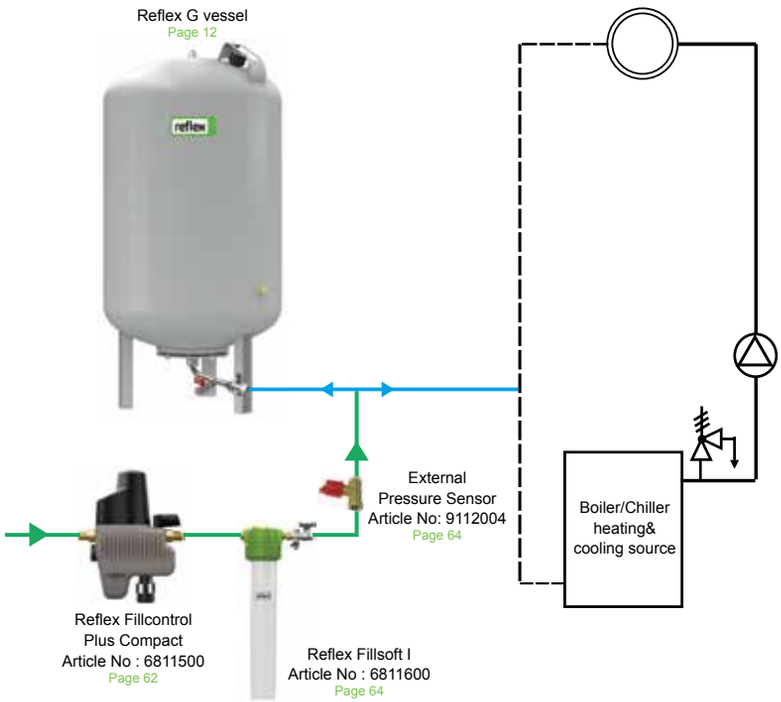

Static vessel in combination with Fillcontrol Plus Compact Fillsoft. If the system pressure drops below the setpoint, an appropriate amount of water will be filled into the unit from the water mains via the Fillcontrol Plus Compact device.

It also includes a RPZ valve for protection against backflow, providing protection against the contamination of mains cold water supply according to EN1717. By the Fillsoft device the system water can be totally softened or adjusted to the required level.

G-vessel with Fillcontrol Plus

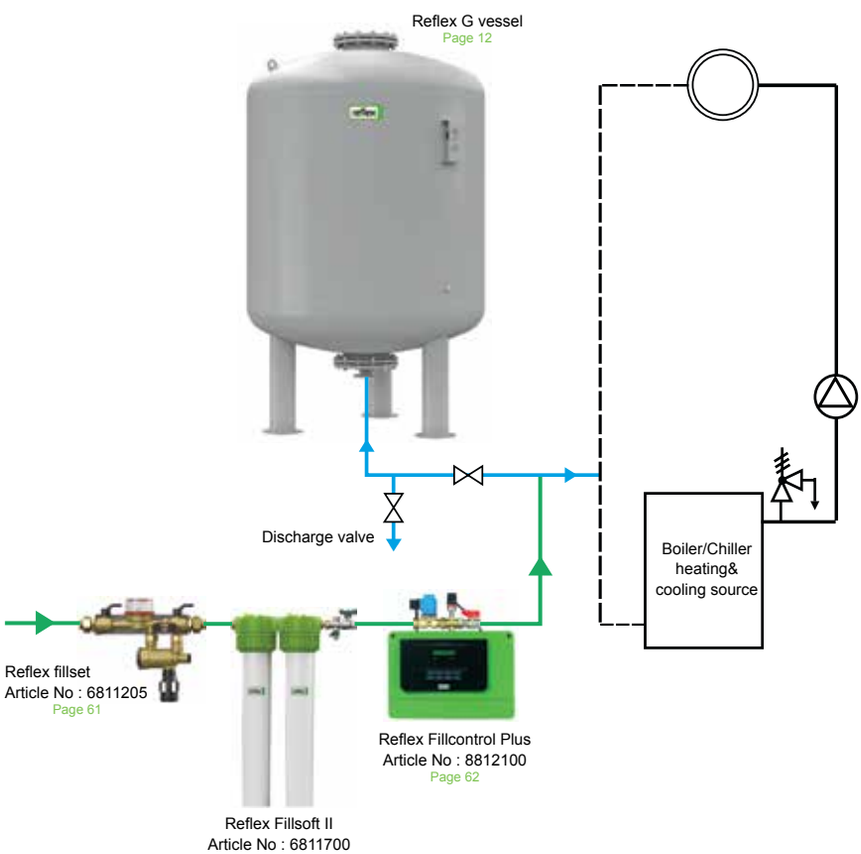

Static vessel in combination with Fillset RPZ valve, Fillsoft II water softening device and Fillcontrol Plus. If the system pressure drops below the setpoint, an appropriate amount of water will be filled into the unit from the water mains via the Fillcontrol Plus device. By the Fillsoft device the system water can be totally softened or adjusted to the required level.

The Fillset RPZ valve protects against backflow, providing protection against the contamination of mains cold water supply according to EN1717. By connecting the contact water meter to the Fillcontrol Plus control unit the Fillmeter function is available.

Combination Options

Alternative

Optional



Reflex Fillset Compact
Page 61

Reflex Fillsoft I
Page 64



Reflex Softmix

Diaphragm Expansion Vessels



Reflex
Page 9-12



Reflex Fillmeter
Page 64



Reflex Fillcontrol
Page 62



Reflex External pressure sensor
Page 64



Reflex Fillset
Page 61

Reflex Fillsoft II
Page 64



Reflex Softmix



Reflex Fillcontrol Plus
Page 62

Reflex compressor controlled pressurisation unit



Reflexomat Compact
Page 32



MV Solenoid
Page 61

Reflex compressor controlled pressurisation unit



Reflexomat
Page 27-38

Reflex Fillsoft II
Page 64



Reflex pump controlled pressurisation unit



Variomat
Page 39-48

Reflex deaeration systems



Servitec
Page 67-74

Servitec

Deaeration Systems & Separation Technology



Control Unit

Control Basic S



- 2-line LCD display
- 8 control keys
- 2 status displays
- Integrated control of system pressure, deaeration and water make-up
- Manual and automatic operation
- Common fault output signal
- Input, for contact water meter
- RS-485 interface

Control Touch



- 4.3” touch screen colour display
- Graphic user interface
- Simply structured plain text menus including operating instructions and help texts
- Integrated control of system pressure, deaeration and water make-up
- Manual and automatic operation
- Permanent display of the most important operating parameters in the system diagram
- Intelligent Plug & Play operational management
- Evaluation and storage of the most important operational data
- Extensive interfaces:
  - Input, for contact water meter
  - 2 x dry contact outputs for error messages
  - 2 x analogue outputs for pressure and vessel content
  - 2 x RS-485 interfaces
  - Plugs for Bluetooth module, HMS networks and KNX module, as well as SD card





PLUS X AWARD®
achieved for:
Innovation
High Quality
Design
Ease of Use
Functionality

Servitec

Patented Technology for Optimum Degassing

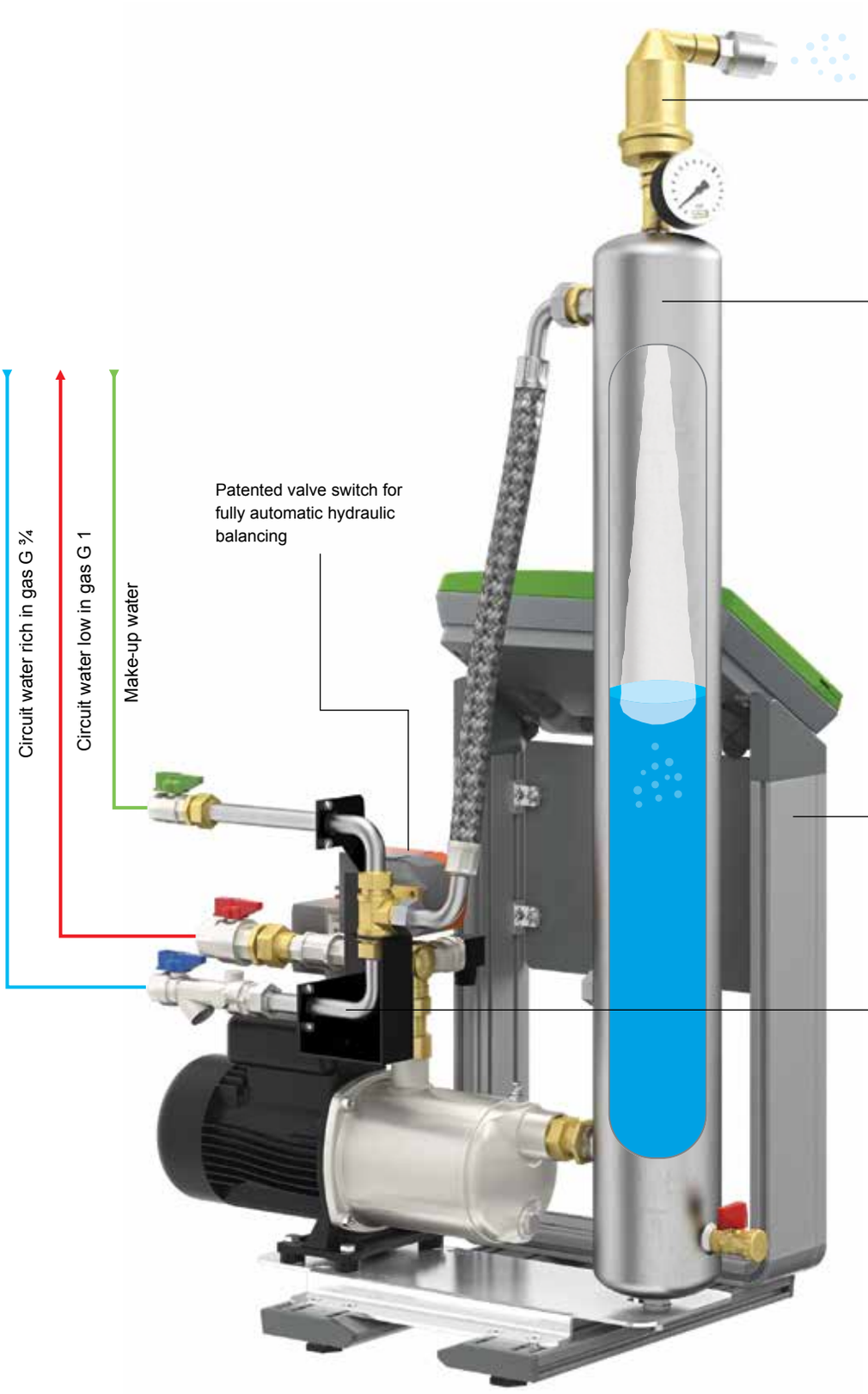

The dipstick-tube degassing
allows gases to escape and is hermetically sealed

The vacuum spray tube
The height and diameter are coordinated so that atomization of the water is guaranteed in a large free vacuum immediately after the start of the degassing cycle

Control
Degassing cycles run on an optimized timer program or are ideally controlled according to the gas content of the water

Hydraulics
The control's integrated plug & play operational management automatically coordinates the hydraulics with the regulating ball valves with the pressure conditions in the system

Servitec in Magcontrol and Levelcontrol Mode

Reflex Servitec in magcontrol mode combined with expansion vessel system

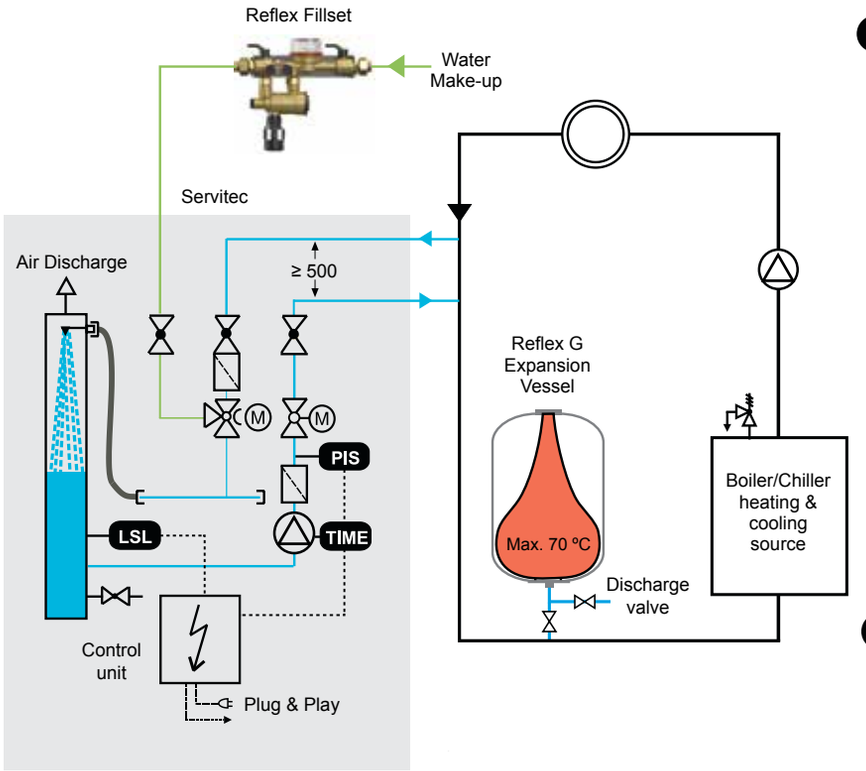

PIS Filling - Make-Up, Pressure-Dependent - Magcontrol

The pressure is shown in the display Excess and insufficient pressure levels are signaled Automatic, controlled make-up in the event that the system fails to reach the filling pressure of 0.2 bar Servitec degassing of the make-up and filling water

TIME Degassing

Vacuum degassing of a part flow of the circuit water takes place according to an optimized schedule using a selectable degassing mode.

- Continuous degassing (after start-up)
- Interval degassing (automatically activated after continuous degassing)

Reflex Servitec in levelcontrol mode for systems with compressor controlled pressure maintaining station

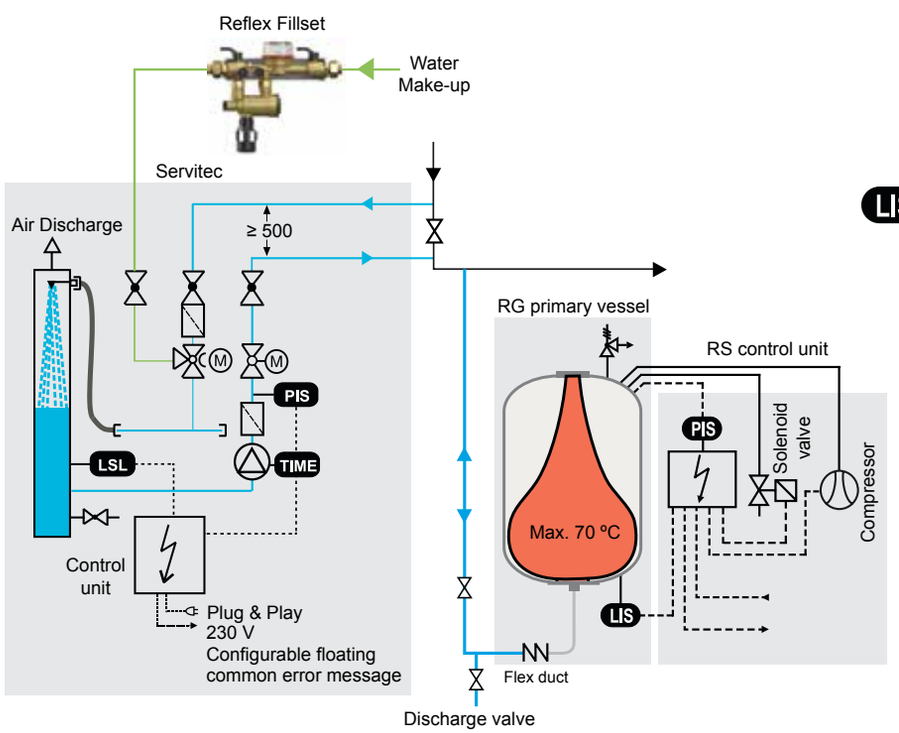

LIS Make-up, Level-Dependent

Automatic, controlled make-up if the minimum water level is not reached in the expansion vessel of the compressor - controlled pressure - maintaining station Servitec degassing of the make-up water

Servitec Working Principle

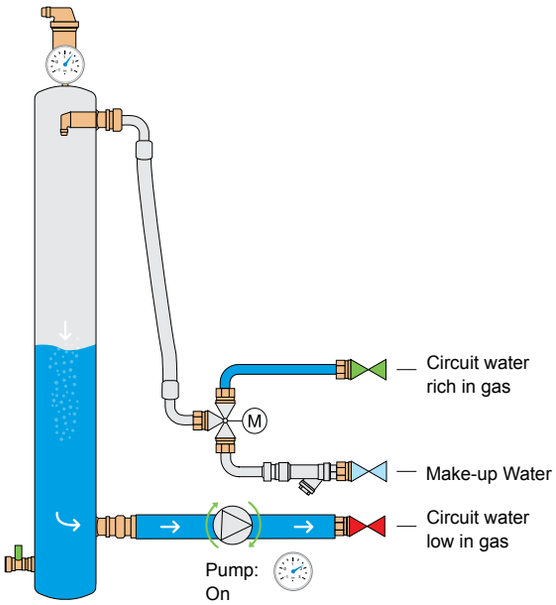

1. Vacuum is drawn
Pump starts to draw vacuum in the spray tube.

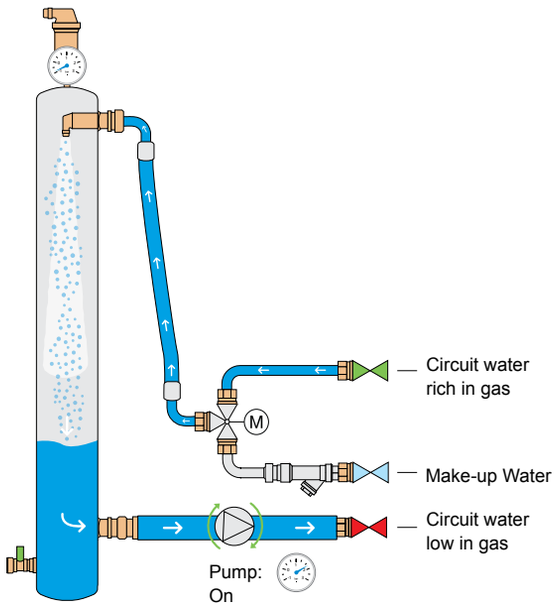

2. Atomisation
The media is sprayed into the spray tube where dissolved gasses due to vacuum are released from the media.

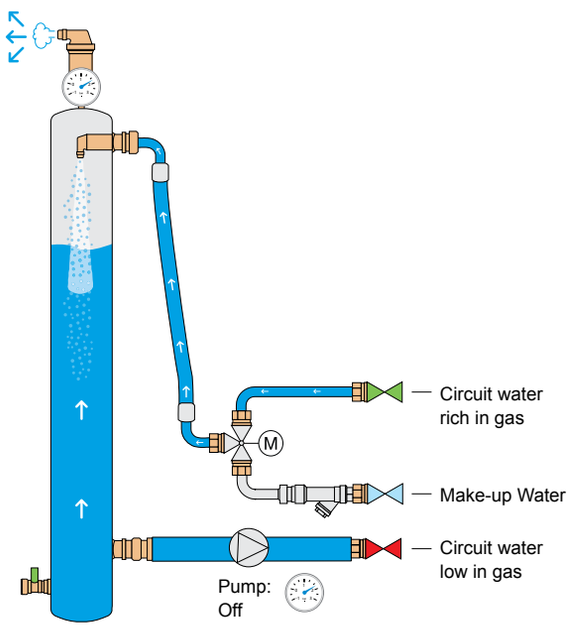

3. Discharge
Pump stop and the vacuum in spray tube change back to system pressure. Thus free gas and micro bubbles are de-aerated via the automatic air-vent

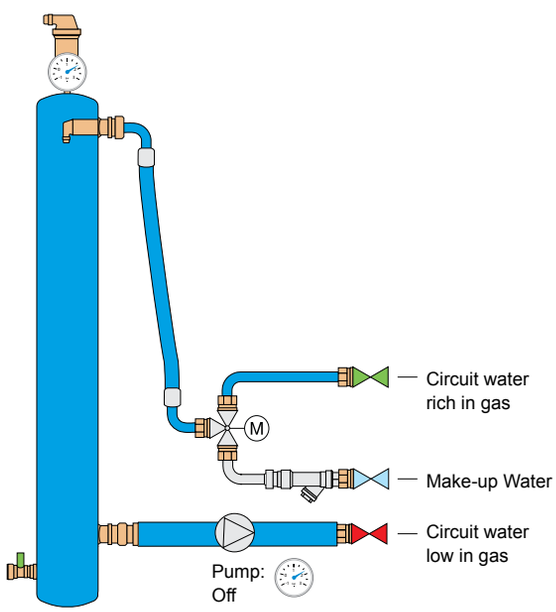

4. Idling time
Idling time before next cycle starts.

Servitec 30

- Vacuum spray-tube deaeration with intergrated water make-up systems used in conjunction with diaphragm expansion vessels or pressurisation systems
- Ideally suited for offices and commercial buildings
- Flexible adjustment of the Servitec Magcontrol or Levelcontrol operating modes
- Central deaeration of the water in the system and make-up water
- Max. operating pressure: 8 bar
- Max. flow temperature: 120°C
- Microprocessor controller with plain text display for pressure
- Floating contact for common message
- Simple commissioning with auto setup
- Patented, fully automatic overflow regulation
- Safe control (water make-up using the actuator valve)
- Water make-up is possible from a storage tank (on site)
- Control Touch from Servitec 120



Servitec 30
Wall mounted



Permissible maximum operating temperature: 70°C

Type	**Control Basic** Article No	Material Group	System Volume Vs (m³), 70°C	Working Pressure (bar) 70°C	Make-up Rate (m³/h)	H x W x D mm	Weight kg
30	8830720	71	≤ 12	≤ 0.05	≤ 0.05	660 x 545 x 290	13.0
30/gl	8828900	71	≤ 4	0.5 - 3.0	≤ 0.05	660 x 545 x 290	13.0

* Servitec 30 with a working pressure above 0.5 bar and a water make-up pressure of > 0.1 bar

Servitec 35 - 120

- Vacuum spray-tube deaeration with intergrated water make-up systems used in conjunction with diaphragm expansion vessels or pressurisation systems
- Ideally suited for high-rise buildings and district heating / cooling systems
- Flexible adjustment of the Servitec Magcontrol or Levelcontrol operating modes
- Central deaeration of the water in the system and make-up water
- Max. operating pressure:
  8 bar - type 25, 35, 60
  10 bar - type 75, 95, 120
- Max. flow temperature: 120°C
- Microprocessor controller with plain text display for pressure
- Floating contact for common message
- Simple commissioning with auto setup
- Patented, fully automatic overflow regulation
- Safe control (water make-up using the actuator valve)
- Water make-up is possible from a storage tank (on site)
- Control Touch from Servitec 120





Servitec 35-95
Floor standing

Permissible maximum operating temperature: 70°C

Type	Article No	Material Group	System Volume Vs (m³), 70°C	Working Pressure (bar) 70°C	Make-up Rate (m³/h)	H x W x D mm	Weight kg
35	8829000*	71	≤ 220	0.5 - 2.5	≤ 0.35	1.030 x 620 x 440	28.0
60	8829100*	71	≤ 220	0.5 - 4.5	≤ 0.55	1.215 x 685 x 440	34.0
75	8829200*	71	≤ 220	0.5 - 5.4	≤ 0.55	1.215 x 600 x 525	39.0
95	8829300*	71	≤ 220	0.5 - 7.2	≤ 0.55	1.215 x 600 x 525	40.0
Magcontrol 120	8829400**	71	≤ 220	1.3 - 9.0	≤ 0.55	1.215 x 600 x 525	43.0
Levelcontrol 120	8829500**	71	≤ 220	1.3 - 9.0	≤ 0.55	1.215 x 600 x 525	43.0

Version 35–95 with a working pressure above 0.5 bar and a water make-up pressure of > 0.1 bar
* With control basic
** With control touch

Special versions: permissible maximum operating temperature: 90°C

Type	Article No	Material Group	System Volume Vs (m3), 90°C	Working Pressure (bar) 90°C	Make-up Rate (m³/h)	H x W x D mm	Weight kg
75	8825300*	71	≤ 220	1.3 - 5.4	≤ 0.35	1.215 x 600 x 525	39.0
95	8825400*	71	≤ 220	1.3 - 7.2	≤ 0.55	1.215 x 600 x 525	40.0
Magcontrol 120	8825500*	71	≤ 220	1.3 - 9.0	≤ 0.55	1.215 x 600 x 525	43.0
Levelcontrol 120	8825600*	71	≤ 220	1.3 - 9.0	≤ 0.55	1.215 x 600 x 525	43.0

* With control basic

Special versions: permissible maximum operating temperature: 70°C, for use with anti-freeze

Type	Article No	Material Group	System Volume Vs (m3), 70°C gl*	Working Pressure (bar) 70°C gl*	Make-up Rate (m³/h)	H x W x D mm	Weight kg
60/gl	8828100*	71	≤ 50	1.3 - 4.5	≤ 0.55	1.215 x 685 x 440	34.0
75/gl	8828200*	71	≤ 50	1.3 - 4.9	≤ 0.55	1.215 x 600 x 525	39.0
95/gl	8828300*	71	≤ 50	1.3 - 6.7	≤ 0.55	1.215 x 600 x 525	40.0
Magcontrol 120	8828400**	71	≤ 50	1.3 - 8.3	≤ 0.55	1.215 x 600 x 525	43.0
Levelcontrol 120	8828500**	71	≤ 50	1.3 - 8.3	≤ 0.55	1.215 x 600 x 525	43.0

Version with a working pressure above 0.5 bar and a water make-up pressure of > 0.1 bar
* With control basic
** With control touch

I/O Modules

- 2 x analogue outputs for controlling pressure and level
- 6 x freely programmable digital inputs
- 6 x freely programmable floating outputs

Article No : 8997700 **Material group :** 39



Bus Modules

For data exchange between the control (RS 485) and the central building control system



LonWorksDigital	**Article No :** 8860000	**Material Group :** 86
LonWorks	**Article No :** 8860100	**Material Group :** 86
Profi bus-DP	**Article No :** 8860200	**Material Group :** 86
Ethernet	**Article No :** 8860300	**Material Group :** 86

Optional: Servitec for Large Scale Systems

- Special systems are constructed to match your particular specifications even for systems above 10.000 m3 with working pressure above 9 bar.
- Also, for systems with permissible operating temparature up to 90°C
- Take advantage of our combined expertise and experience: Consult your Reflex Local representative or visit www.reflex.de/pro for further information.



Tailor made Servitec unit (front view)



Tailor made Servitec unit (reaar view)

Servitec 30 With Reflex G Vessel and Water Make-up

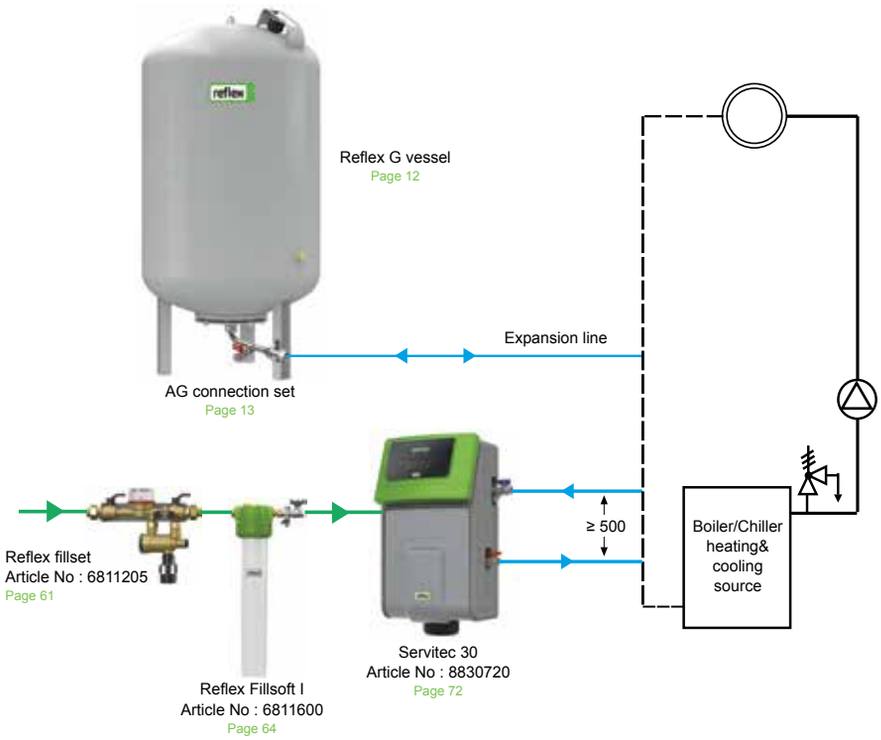

Static vessel in combination with Servitec 30 and Fillset RPZ valve. If the water level in the vessel drops to a critical level, an appropriate amount of water will be filled into the unit from the water mains via the Servitec device.

By connecting the Servitec device in Magcontrol mode make-up water is de-aerated before going into the system. The Fillset RPZ valve protects against backflow, providing protection against the contamination of mains cold water supply according to EN1717.

This combination can also be used for applications where the water supply comes from an adjacent container, as the Servitec device is self priming.

Servitec With Reflexomat and Water Make-up

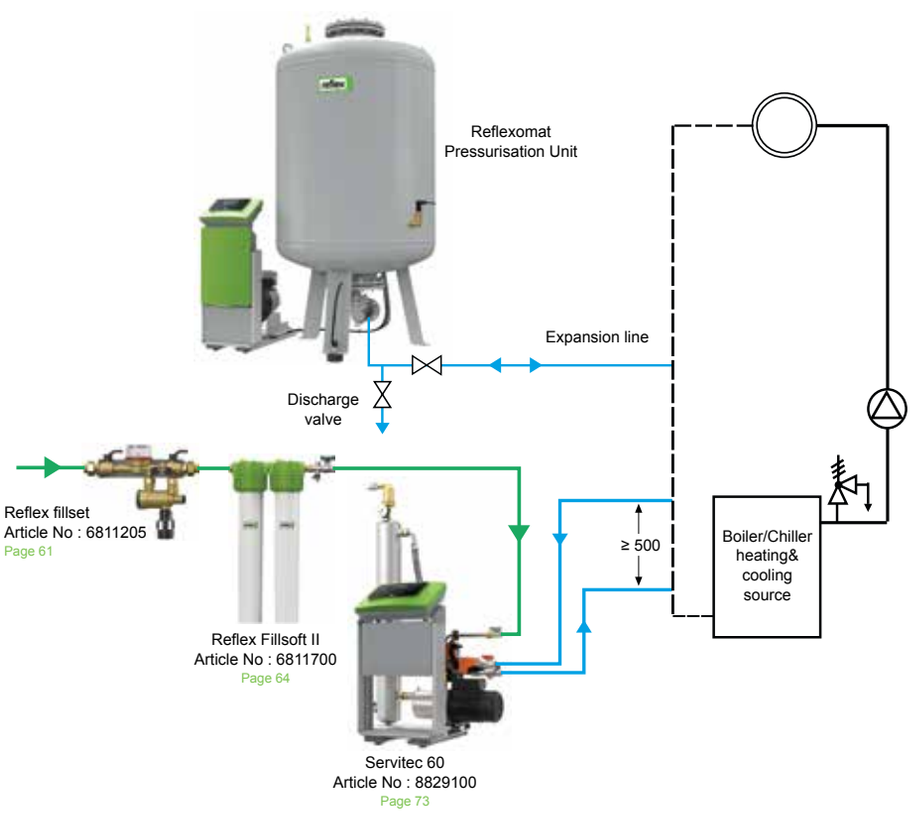

Reflexomat unit in combination with Servitec, Fillsoft II water softening device and Fillset RPZ valve. If the water level in the vessel drops to a critical level, an appropriate amount of water will be filled through the Servitec from the water mains. By the Fillsoft device the system water can be totally softened or adjusted to the required level by Servitec.

The Fillset RPZ valve protects against backflow, providing protection against the contamination of mains cold water supply according to EN1717. By connecting the contact water meter to the Variomat control unit the Fillmeter function is available.

Comparison of Different Deaeration Systems

In order to illustrate the effectiveness of different deaeration systems, we would like to show the physically and technically achievable, minimum nitrogen content in the network water in dependence on the pressure conditions at the place of installation Nitrogen serves as “measurement gas” because it is an inert gas and is, thus, not consumed in secondary reactions. This leads to an unbiased measurement result.

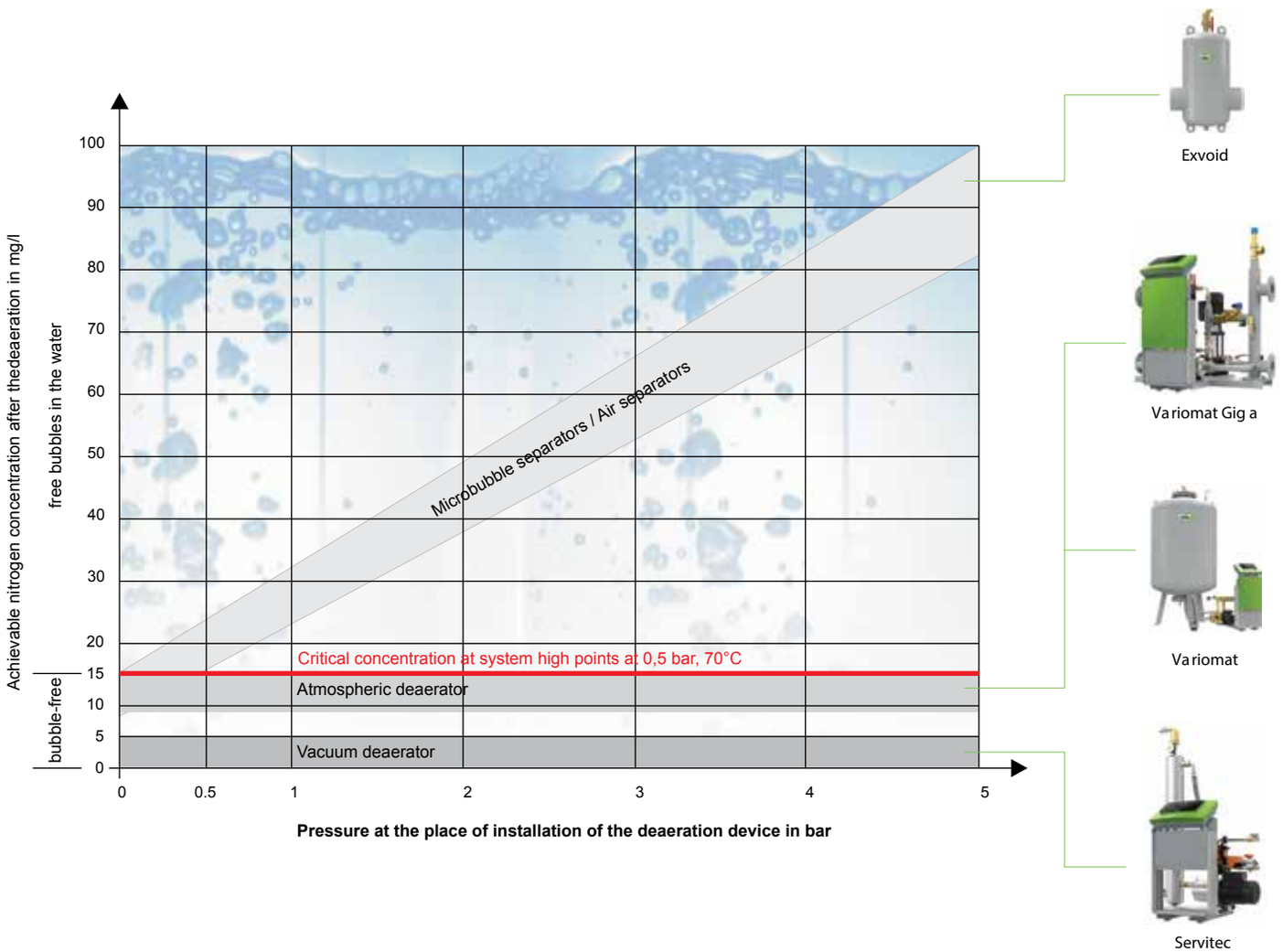

Mechanical air separators

Can only work effectively if they are installed at high points.

Atmospheric deaerators

Can prevent the formation of free gas bubbles in the circulation water. They are the best solution as a central bleeding device, but not for the purposeful oxygen separation. Erosion due to two-phase flow can be avoided to the greatest possible extent.

Vacuum deaerators

Can reduce the overall gas content almost to zero. They combat corrosion (reactive gases) as well as erosion (inert gases). High degrees of separation are achieved using dynamic vacuum deaerators.

Separation Technology

Deaeration Systems & Separation Technology







Exvoid

Brass

Horizontal | Vertical

Automatic Air Vent



T 1/2”
110°C/180°C

Micro Bubble Air Separator



A22-1 1/2”
110°C/180°C



A22-2” V
110°C/180°C

Page 79-80

Brass

Welded Connection | Flanged Connection

HiCap
HiCap R



A60.3-A329.9
Hi-cap Version



A50-A600
Hi-cap Version

Page 81-82

Exdirt

Dirt and Sludge Separator



D22-2”
110°C



D22-1” V
110°C

Dirt and Sludge Separator With Magnet



D22-2” M
110°C



D22-1” V-M
110°C

Page 83



D60.3-D329.9
Hi-cap Version



D50-D600
Hi-cap Version

Magnet Insert
(Option)



D60.3-D329.9
Hi-cap Version R



D50-D600
Hi-cap Version R

Page 84-87

Extwin

Combined Micro Bubble Dirt and Sludge Separator



TW22-1”
110°C



TW22 V
110°C

Combined Micro Bubble Dirt and Sludge Separator With Magnet



TW22-1” M
110°C



TW22 V-M
110°C

Page 88



TW60.3-TW329.9
Hi-cap Version



TW50-TW600
Hi-cap Version

Magnet Insert
(Option)



TW60.3-TW329.9
Hi-cap Version R



TW50-TW600
Hi-cap Version R

Page 89-92

Exvoid T



Non-leak, non-shut-off deaeration valve

Air chamber with special design: floating impurities do not reach the deaeration valve; high air chamber volume to counteract pressure fluctuations

Solid construction for an extra-long service life

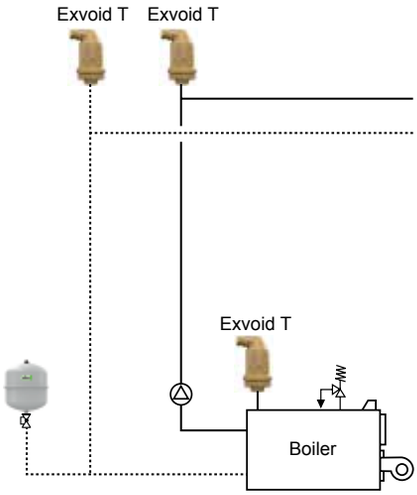

Exvoid T system air venting sketch

Overview
- Brass casing
- Multiple testing procedure on the deaeration valve
- Vertical installation
- Rp 1/2 system connection and a G 1/2 connection thread on the deaeration valve
- Application limits 110 / 180°C and 10 bar
- Reflex Extop, now with it's new name Reflex Exvoid

Exvoid T Automatic Air Vent

Fields of application

The automatic air vent in the reflex Exvoid T series is an ongoing and effective way of removing air and other gases from heating, solar, and cooling systems, including under constant operating conditions, in filling processes after having emptied the system, and in new installations. The vents are applied at high points within the system or at specially identified collection points

Mode of operation

In order to ensure ongoing safe and automatic operation, Reflex Exvoid T automatic air vents follow a sound engineering design formula: Gases collect in a generously sized chamber. This causes the water level in the chamber to drop and a float to fall, which opens the deaeration valve once it reaches a certain depth. The combination of a multiple-tested valve and a generously sized air chamber ensures flawless operation, even in extreme pressure fluctuations

T, brass
- 110°C 10 bar

Type	Article No	Weight kg	Material Group	Connection	Ø (mm)	H (mm)
T 1 / 2	9250000	0.7	82	Rp ½	63	120



T Solar, brass
- 180°C 10 bar

Type	Article No	Weight kg	Material Group	Connection	Ø (mm)	H (mm)
T 1 / 2 S	9250600	0.7	82	Rp ½	63	120



Benefits in brief
- Reliable, automatic deaeration
- Reduces flow noise, circulation problems, drop in performance and helps to avoid corrosion damage
- Optimum function reliability, even in tough conditions
- Reduces maintenance requirements
- Suitable for a variety of temperatures and applications

Exvoid

The core element is a tube mesh construction that has proven itself over the decades, with an extremely low rate of pressure loss in the flow direction and a high rate of pressure loss in the transverse direction. This drastically reduces the amount of turbulence and guides the gas bubbles to a part-stabilized area

Volumetric flow:
1.25 - 8 m³/h

Exiso thermal insulation:
A22 - 2”

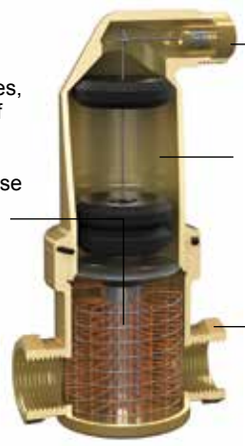

Non-leak, non-shut-off deaeration valve

Air chamber with special design: its large volume means that driving impurities do not reach the deaeration valve. The large distance between the water surface and the valve ensures flawless operation, even in high pressure fluctuations

Several connections are available from A22 to 2”

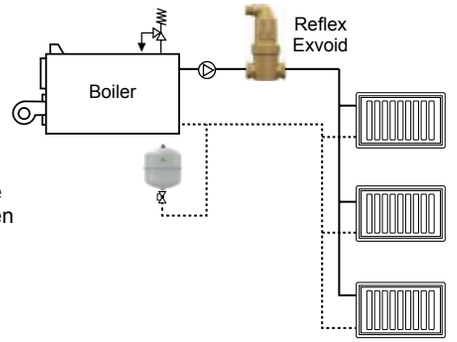

Exvoid “brass” system deaeration sketch

Exvoid (Brass) Micro Bubble Air Seperator

Brass, 110°C 10 bar

- Horizontal

Type	Article No	Weight kg	Connection	V̇max m³/h	L (mm)	Ø (mm)	H (mm)
A 22	9251000	1.1	22 mm[1)]	1.25	106	63	165
A ¾	9251010	1.0	Rp ¾	1.25	85	63	165
A 1	9251020	1.1	Rp 1	2.00	88	63	180
A1 ¼	9251030	1.3	Rp 1 ¼	3.70	88	63	202
A1 ½	9251040	1.5	Rp 1 ½	5.00	88	63	236
A 2	9251050	3.2	Rp 2	8.00	132	100	277

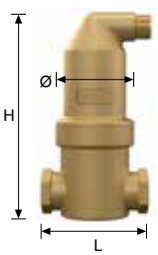

Material Group : 82

[1)] Clamp ring

Brass, 110°C 10 bar

- Vertical

Type	Article No	Weight kg	Connection	V̇max m³/h	L (mm)	Ø (mm)	H (mm)
A 22 V	9251500	1.7	22 mm[1)]	1.25	84	63	206
A ¾ V	9251510	1.6	Rp ¾	1.25	84	63	206
A 1 V	9251520	1.6	Rp 1	1.25	84	63	206

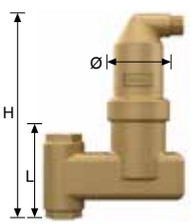

Material Group : 82

[1)] Clamp ring

Brass, 180°C 10 bar

- For solar systems

Type	Article No	Weight kg	Connection	V̇max m³/h	L (mm)	ØD (mm)	H (mm)
A 22 S	9251600	1.2	22 mm[1)]	1.25	106	63	165
A ¾ S	9251610	1.1	Rp ¾	1.25	85	63	165
A 1 S	9251620	1.2	Rp 1	2.00	88	63	185
A 1 ¼ S	9251630	1.4	Rp ¼	3.70	88	63	202
A 1 ½ S	9251640	1.6	Rp ½	5.00	88	63	236

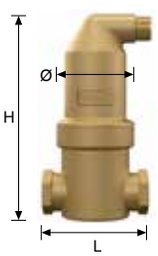

Material Group : 82

[1)] Clamp ring

Brass, 180°C 10 bar

- For solar systems

Type	Article No	Weight kg	Connection	V̇max m³/h	L (mm)	ØD (mm)	H (mm)
A 22 S	9251700	1.8	22 mm[1)]	1.25	104	63	220
A ¾ SV	9251710	1.7	Rp ¾	1.25	84	63	206
A 1 SV	9251720	1.7	Rp 1	2.00	84	63	206

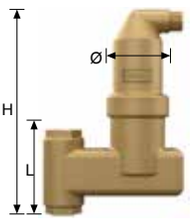

Material Group : 82

[1)] Clamp ring

Exvoid

Because micro-bubbles are carried along by the flow, special measures are required in order to remove them from the system efficiently. The casings of Reflex Exvoid micro-bubble separators have a larger cross-section than the connection dimensions, which reduces the flow speed in the separator. At the same time, the volume flow is guided by a special wire mesh. The ensuing turbulence causes gas bubbles to move in an undetermined direction. Depending on the volume flow, density, and volume of the particles, parts of these gas bubbles are supported in their natural breakaway motion and removed from the system via the deaeration top section

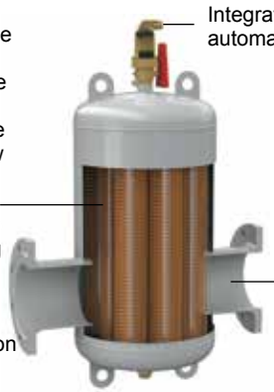

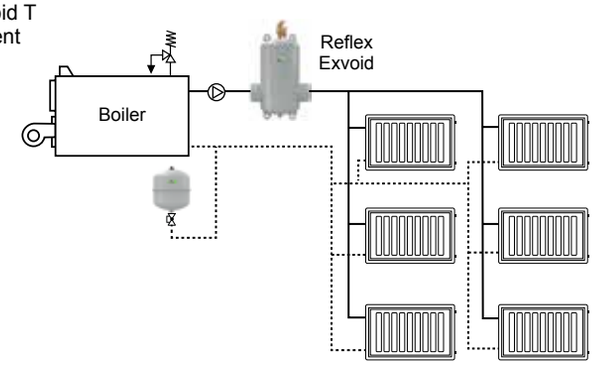

Exvoid “steel” system deaeration sketch

Overview

- Connection: DN 50 - DN 600
- Volumetric flow: 12.5 - 1530 m³/h
- Exiso thermal insulation: DN 50 - DN 150

Exvoid (Steel) Micro Bubble Air Seperator

Steel, 110°C 10 bar

- Welded connection

Type	Article No	Weight kg	Connection	V̇max m³/h	L (mm)	Ø D (mm)	H (mm)	H B (mm)
A 60.3	8251100	5	60.3	12.5	260	132	629[1)]	145
A 76.1	8251110	5	76.1	20.0	260	132	629[1)]	155
A 88.9	8251120	11	88.9	27.0	370	206	743[1)]	151
A 114.3	8251130	11	114.3	47.0	370	206	743[1)]	161
A 139.7	8251140	24	139.7	72.0	525	354	767[1)]	206
A 168.3	8251150	26	168.3	108.0	525	354	767[1)]	221
A 219.1	8251160	70	219.1	180.0	650	409	1050	276
A 273.0	8251170	108	273.0	288.0	750	480	1157	338
A 323.9	8251180	150	323.9	405.0	850	634	1426	393



Material Group : 83

[1)] Thermal insulation available

Steel, 110°C 10 bar

- Flange connection

Type	Article No	Weight kg	Connection	V̇max m³/h	L (mm)	Ø D (mm)	H (mm)	H B (mm)
A 50	8251300	11	DN 50/PN 16	12.5	350	132	629[1)]	145
A 65	8251310	12	DN 65/PN 16	20.0	350	132	629[1)]	155
A 80	8251320	18	DN 80/PN 16	27.0	470	206	743[1)]	151
A 100	8251330	21	DN 100/PN 16	47.0	475	206	743[1)]	161
A 125	8251340	60	DN 125/PN 16	72.0	635	354	767[1)]	206
A 150	8251350	64	DN 150/PN 16	108.0	635	354	767[1)]	221
A 200	8251360	90	DN 200/PN 16	180.0	775	409	1050	276
A 250	8251370	146	DN 250/PN 16	288.0	890	480	1157	338
A 300	8251380	194	DN 300/PN 16	405.0	1005	634	1426	393
A 350	8251910	Upon request	DN 350/PN 16	500.0	1128	634	1950	Upon request
A 400	8251920	Upon request	DN 400/PN 16	650.0	1226	750	2150	Upon request
A 450	8251940	Upon request	DN 450/PN 16	850.0	1330	750	2360	Upon request
A 500	8251950	Upon request	DN 500/PN 16	1060.0	1430	1000	2580	Upon request
A 600	8251960	Upon request	DN 600/PN 16	1530.0	1630	1200	3020	Upon request



Material Group : 83

[1)] Thermal insulation available

Benefits in brief

- Removes free circulating air and gas bubbles
- Robust heavy gauge steel construction
- Functions in fully automated, continuous operation
- Produces just a minimal, constant drop in pressure
- Enables much faster hydraulic balancing after filling processes
- Prevents development of noise, wear through corrosion, and loss in performance through the formation of larger air bubbles
- Full range in terms of operating pressures, temperatures, and materials

Exvoid HC

Because micro-bubbles are carried along by the flow, special measures are required in order to remove them from the system efficiently. The casings of Reflex Exvoid HC micro-bubble separators have a larger cross-section than the connection dimensions, which reduces the flow speed in the separator. At the same time, the volume flow is guided by a special wire mesh. The ensuing turbulence causes gas bubbles to move in an undetermined direction. Depending on the volume flow, density, and volume of the particles, parts of these gas bubbles are supported in their natural breakaway motion a nd removed from the system via the deaeration top section

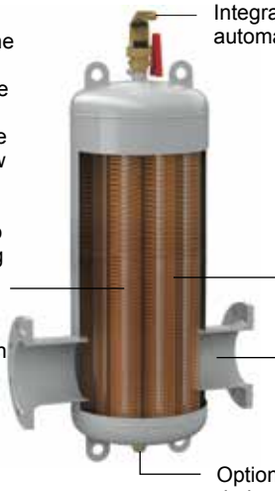

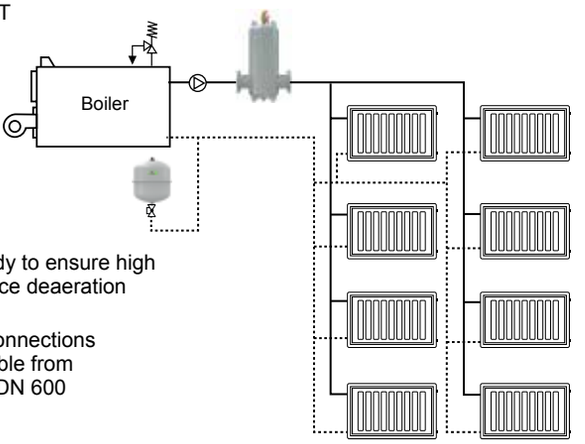

Exvoid “steel” HiCap system deaeration sketch

Overview

- Connection: DN 50 - DN 600
- Volumetric flow: 25 - 3000 m³/h

Exvoid (Steel) Micro Bubble Air Seperator

Steel, 110°C 10 bar

- Welded connection

Type	Article No	Weight kg	Connection	V̇max m³/h	L (mm)	ØD (mm)	H (mm)	HB (mm)
A 60.3 HC	9251105	5	60.3	25.0	260	132	810	145
A 76.1 HC	9251115	5	76.1	40.0	260	132	810	155
A 88.9 HC	9251125	11	88.9	54.0	370	206	965	151
A 114.3 HC	9251135	11	114.3	94.0	370	206	965	161
A 139.7 HC	9251145	24	139.7	144.0	525	354	1205	206
A 168.3 HC	9251155	26	168.3	215.0	525	354	1205	221
A 219.1 HC	9251165	70	219.1	360.0	650	409	1495	276
A 273.0 HC	9251175	108	273.0	575.0	750	480	1895	338
A 323.9 HC	9251185	150	323.9	810.0	850	634	2205	393

Material Group : 83

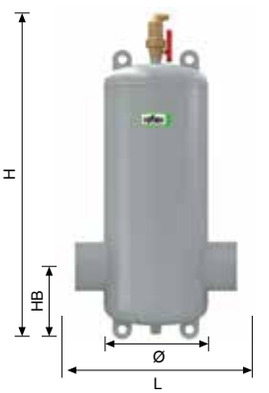

Steel, 110°C 10 bar

- Flange connection

Type	Article No	Weight kg	Connection	V̇max m³/h	L (mm)	ØD (mm)	H (mm)	HB (mm)
A 50 HC	9251305	11	DN 50/PN 16	25.0	350	132	810	145
A 65 HC	9251315	12	DN 65/PN 16	40.0	350	132	810	155
A 80 HC	9251325	18	DN 80/PN 16	54.0	470	206	965	151
A 100 HC	9251335	21	DN 100/PN 16	94.0	475	206	965	161
A 125 HC	9251345	60	DN 125/PN 16	144.0	635	354	1205	206
A 150 HC	9251355	64	DN 150/PN 16	215.0	635	354	1025	221
A 200 HC	9251365	90	DN 200/PN 16	360.0	775	409	1495	276
A 250 HC	9251375	146	DN 250/PN 16	575.0	890	480	1895	338
A 300 HC	9251385	194	DN 300/PN 16	810.0	1005	634	2205	393
A 350 HC	9251915	Upon request	DN 350/PN 16	1000.0	1128	634	2460	Upon request
A 400 HC	9251925	Upon request	DN 400/PN 16	1300.0	1226	750	2740	Upon request
A 450 HC	9251945	Upon request	DN 450/PN 16	1700.0	1330	750	3030	Upon request
A 500 HC	9251955	Upon request	DN 500/PN 16	2120.0	1430	1000	3310	Upon request
A 600 HC	9251965	Upon request	DN 600/PN 16	3000.0	1630	1200	3160	Upon request

Material Group : 83



Benefits in brief

- Removes free circulating air and gas bubbles
- Functions in fully automated, continuous operation
- Produces just a minimal, constant drop in pressure
- Enables much faster hydraulic balancing after filling processes
- Prevents development of noise, wear through corrosion, and loss in performance through the formation of larger air bubbles
- Full range in terms of operating pressures, temperatures, and materials
- Specially designed for bigger systems with longer heights and higher volumetric flow

Exdirt

The core element is a tube mesh construction that has proven itself over the decades, with an extremely low rate of pressure loss in the flow direction and a high rate of pressure loss in the transverse direction. This drastically reduces the amount of turbulence and guides the sludge particles to a part-stabilized area

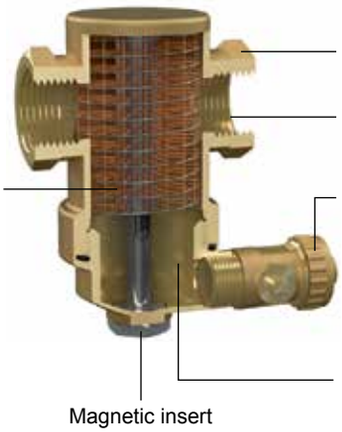

Several connections are available from A22 to 2”

Through flow is not impeded by sludge

Space-saving, perpendicular draining tap. The collected sludge is quickly and forcefully pressed out when the tap is opened so that it can be closed again right away. The entire process takes just a few seconds

The capacity to capture large amounts of sludge results in longer intervals before cleaning becomes necessary

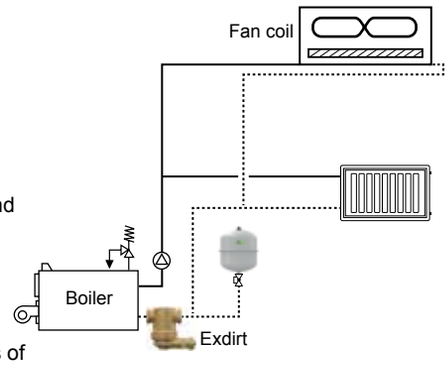

Exdirt “brass” system dirt and sludge seperation sketch

Volumetric flow:
1.25 - 8 m³/h

Exiso thermal insulation:
DN 20 - DN 40 and 2”

Exdirt (Brass) Dirt and Sludge Separator

Brass, 110°C 10 bar

- Horizontal

Type	Article No	Weight kg	Connection	V̇max m³/h	L (mm)	Ø (mm)	H (mm)
D 22	9252000	1.0	22 mm[1)]	1.25	85	63	103[2)]
D 3/4	9252010	0.9	Rp 3/4	1.25	85	63	103[2)]
D 1	9252020	1.0	Rp 1	2.00	88	63	120[2)]
D 1 1/4	9252030	1.2	Rp 1 1/4	3.70	88	63	140[2)]
D 1 1/2	9252040	1.3	Rp 1 1/2	5.00	88	63	174[2)]
D 2	9252050	3.1	Rp 2	8.00	132	100	215

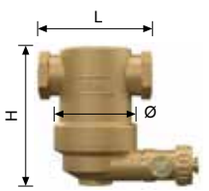

Material Group : 82

Brass, 110°C 10 bar

- Vertical

Type	Article No	Weight kg	Connection	V̇max m³/h	L (mm)	Ø (mm)	H (mm)
D 22 V	9252500	1.5	22 mm[1)]	1.25	84	63	144[2)]
D ¾ V	9252510	1.4	Rp ¾	1.25	84	63	144[2)]
D 1 V	9252520	1.5	Rp 1	1.25	84	63	144[2)]

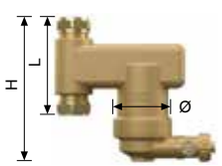

Material Group : 82

Exdirt (Brass) Dirt and Sludge Separator - with magnetic insert

Brass, 110°C 10 bar

- Horizontal M with magnetic insert

Type	Article No	Weight kg	Connection	V̇max m³/h	L (mm)	Ø (mm)	H (mm)
D 22 M	9256000	1.1	22 mm[1)]	1.25	85	63	103[2)]
D ¾ M	9256010	1.0	Rp ¾	1.25	85	63	103[2)]
D 1 M	9256020	1.1	Rp 1	2.00	88	63	120[2)]
D 1 ¼ M	9256030	1.3	Rp 1 ¼	3.70	88	63	140[2)]
D 1 ½ M	9256040	1.4	Rp 1 ½	5.00	88	63	174[2)]
D 2 M	9256050	3.3	Rp 2	8.00	132	100	215

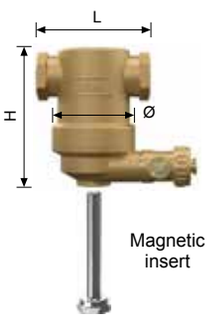

Material Group : 82

Brass, 110°C 10 bar

- Vertical M with magnetic insert

Type	Article No	Weight kg	Connection	V̇max m³/h	L (mm)	Ø (mm)	H (mm)
D 22 V-M	9256500	1.6	22 mm[1)]	1.25	84	63	144[2)]
D ¾ V-M	9256510	1.5	Rp ¾	1.25	84	63	144[2)]
D 1 V-M	9256520	1.6	Rp 1	1.25	84	63	144[2)]

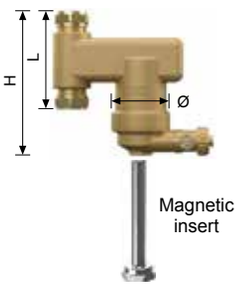

Material Group : 82

[1)] Clamping ring
[2)] Thermal insulation available

Exdirt

The sludge/dirt separation in the Reflex Exdirt works on a similar principle to micro-bubble separation: The flow is guided through an area with a greater cross-section than the connection dimensions in order to reduce the flow speed. The ensuing turbulence caused by the tube mesh causes heavy materials to move in an undetermined direction. Depending on the volume flow, density, and volume, parts of these sludge particles are supported in their natural breakaway motion and guided to the bottom section of the casing

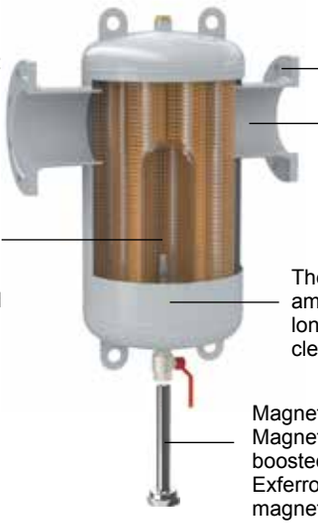

Several connections are available from DN 50 - DN 600

Through flow is not impeded by sludge

The capacity to capture large amounts of sludge results in longer intervals before cleaning becomes necessary

Magnetic insert: Magnetic removal can be boosted by insertion of Exferro high performance magnets

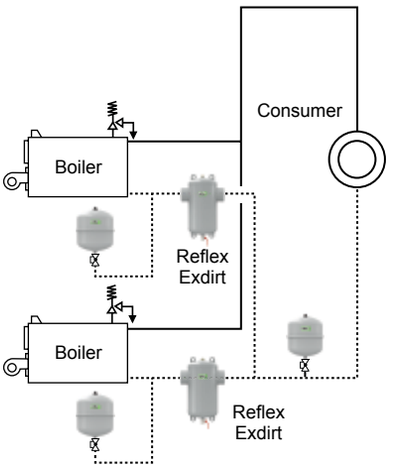

Exdirt "steel" system dirt and sludge seperation sketch

Overview

- Connection: DN 50 - DN 600
- Volumetric flow: 12.5 - 1530 m³/h
- Exiso thermal insulation: DN 50 - DN 150

Exdirt (Steel) Dirt and Sludge Separator

Steel, 110°C 10 bar

- Welded connection

Type	Article No	Weight kg	Connection	V̇max m³/h	L (mm)	Ø (mm)	H (mm)	HB (mm)
D 60.3	8252100	5	60.3	12.5	260	132	502 [1)]	370
D 76.1	8252110	5	76.1	20.0	260	132	502 [1)]	370
D 88.9	8252120	11	88.9	27.0	370	206	617 [1)]	430
D 114.3	8252130	11	114.3	47.0	370	206	617 [1)]	430
D 139.7	8252140	24	139.7	72.0	525	354	792 [1)]	550
D 168.3	8252150	26	168.3	108.0	525	354	792 [1)]	550
D 219.1	8252160	90	219.1	180.0	650	409	1002	600
D 273.0	8252170	108	273.0	288.0	750	480	1266	800
D 323.9	8252180	150	323.9	405.0	850	634	1476	900

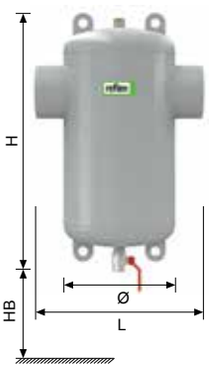

Material Group : 83

[1)] Thermal insulation available

Steel, 110°C 10 bar

- Flange connection

Type	Article No	Weight kg	Connection	V̇max m³/h	L (mm)	Ø (mm)	H (mm)	HB (mm)
D 50	8252300	11	DN 50/PN 16	12.5	350	132	502 [1)]	370
D 65	8252310	12	DN 65/PN 16	20.0	350	132	502 [1)]	370
D 80	8252320	18	DN 80/PN 16	27.0	470	206	617 [1)]	430
D 100	8252330	21	DN 100/PN 16	47.0	470	206	617 [1)]	430
D 125	8252340	60	DN 125/PN 16	72.0	635	354	792 [1)]	550
D 150	8252350	64	DN 150/PN 16	108.0	635	354	792 [1)]	550
D 200	8252360	110	DN 200/PN 16	180.0	775	409	1002	600
D 250	8252370	146	DN 250/PN 16	288.0	890	480	1266	800
D 300	8252380	194	DN 300/PN 16	405.0	1005	634	1476	900
D 350	8252910	Upon request	DN 350/PN 16	500.0	1128	634	1890	Upon request
D 400	8252920	Upon request	DN 400/PN 16	650.0	1226	750	2090	Upon request
D 450	8252940	Upon request	DN 450/PN 16	850.0	1330	750	2300	Upon request
D 500	8252950	Upon request	DN 500/PN 16	1060.0	1430	1000	2520	Upon request
D 600	8252960	Upon request	DN 600/PN 16	1530.0	1630	1200	2660	Upon request

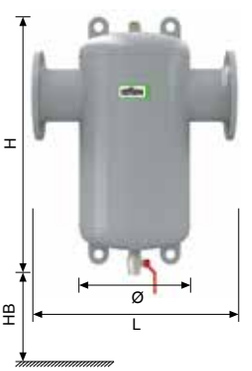

Material Group : 83

[1)] Thermal insulation available

Benefits in brief

- Removes free circulating dirt and sludge particles < 5 micrometer
- Functions in fully automated continuous operation, produces just a minimal constant drop in pressure
- Maintenance takes just 5 seconds Permanent free throughflow opening for the water
- No shut-off valves or bypass lines required. Desludging possible during system operation
- Full range in terms of operating pressures and materials
- Continually ensures flawless functionality of heat generators, thermostat valves, etc.
- Reduces the risk of system defects and breakdowns in the long term

Exdirt R

The sludge/dirt separation in the Reflex Exdirt R works on a similar principle to micro-bubble separation: The flow is guided through an area with a greater cross-section than the connection dimensions in order to reduce the flow speed. The ensuing turbulence caused by the tube mesh causes heavy materials to move in an undetermined direction. Depending on the volume flow, density, and volume, parts of these sludge particles are supported in their natural breakaway motion and guided to the bottom section of the casing

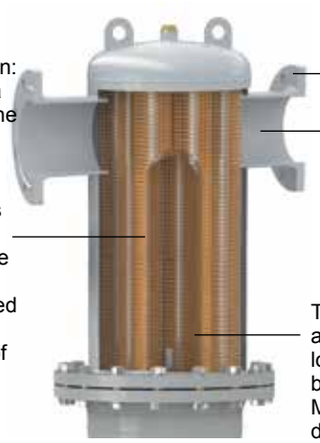

Several connections are available from DN 50 - DN 600

Through flow is not impeded by sludge

The capacity to capture large amounts of sludge results in longer intervals before cleaning becomes necessary. Maintenance is much easier with its detachable base

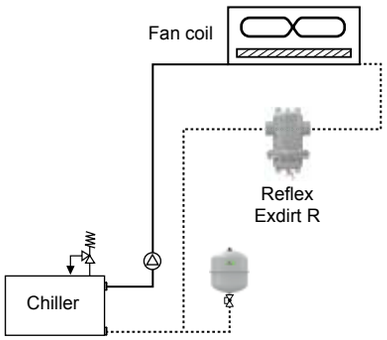

Exdirt "steel" system dirt and sludge seperation sketch

Overview

- Connection: DN 50 - DN 600
- Volumetric flow: 12.5 - 1530 m³/h

Exdirt (Steel) Dirt and Sludge Separator - with inspection flange

Steel, 110°C 10 bar

- Welded connection, inspection flange

Type	Article No	Weight kg	Connection	V̇ max m³/h	L (mm)	Ø (mm)	H (mm)	HB (mm)
D 60.3 R	8252200	18	60,3	12,5	260	132	502 [1)]	370
D 76.1 R	8252210	19	76,1	20,0	260	132	502 [1)]	370
D 88.9 R	8252220	57	88,9	27,0	370	206	617 [1)]	430
D 114.3 R	8252230	70	114,3	47,0	370	206	617 [1)]	430
D 139.7 R	8252240	120	139,7	72,0	525	354	792 [1)]	550
D 168.3 R	8252250	125	168,3	108,0	525	354	792 [1)]	550
D 219.1 R	8252260	140	219,1	180,0	650	409	1002	600
D 273.0 R	8252270	196	273,0	288,0	750	480	1266	800
D 323.9 R	8252280	277	323,9	405,0	850	634	1476	900

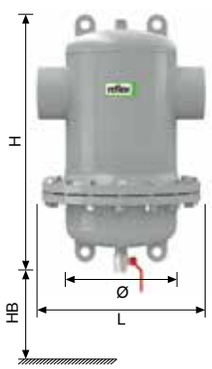

Material Group : 83

[1)] Thermal insulation available

Steel, 110°C 10 bar

- Flange connection, inspection flange

Type	Article No	Weight kg	Connection	V̇ max m³/h	L (mm)	Ø (mm)	H (mm)	HB (mm)
D 50 R	8252400	20	DN 50/PN 16	12,5	350	132	502 [1)]	370
D 65 R	8252410	21	DN 65/PN 16	20,0	350	132	502 [1)]	370
D 80 R	8252420	68	DN 80/PN 16	27,0	470	206	617 [1)]	430
D 100 R	8252430	76	DN 100/PN 16	47,0	475	206	617 [1)]	430
D 125 R	8252440	120	DN 125/PN 16	72,0	635	354	792 [1)]	550
D 150 R	8252450	140	DN 150/PN 16	108,0	635	354	792 [1)]	550
D 200 R	8252460	181	DN 200/PN 16	180,0	775	409	1002	600
D 250 R	8252470	220	DN 250/PN 16	288,0	890	480	1266	800
D 300 R	8252480	305	DN 300/PN 16	405,0	1005	634	1476	900
D 350 R	8252912	Upon request	DN 350/PN 16	500.0	1128	634	1890	Upon request
D 400 R	8252922	Upon request	DN 400/PN 16	650.0	1226	750	2090	Upon request
D 450 R	8252942	Upon request	DN 450/PN 16	850.0	1330	750	2300	Upon request
D 500 R	8252952	Upon request	DN 500/PN 16	1060.0	1430	1000	2520	Upon request
D 600 R	8252962	Upon request	DN 600/PN 16	1530.0	1630	1200	2960	Upon request

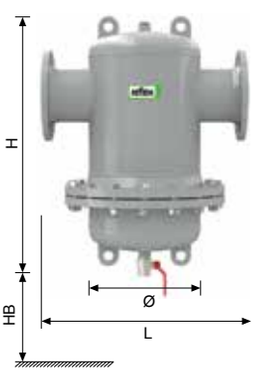

Material Group : 83

[1)] Thermal insulation available

Benefits in brief

- Removes free circulating dirt and sludge particles < 5 micrometer
- Functions in fully automated continuous operation, produces just a minimal constant drop in pressure
- Maintenance takes just 5 seconds Permanent free throughflow opening for the water
- No shut-off valves or bypass lines required. Desludging possible during system operation
- Full range in terms of operating pressures and materials
- Continually ensures flawless functionality of heat generators, thermostat valves, etc.
- Reduces the risk of system defects and breakdowns in the long term
- Easier maintenance due to detachable base

Exdirt HC

The sludge/dirt separation in the Reflex Exdirt HC works on a similar principle to micro-bubble separation: The flow is guided through an area with a greater cross-section than the connection dimensions in order to reduce the flow speed. The ensuing turbulence caused by the tube mesh causes heavy materials to move in an undetermined direction. Depending on the volume flow, density, and volume, parts of these sludge particles are supported in their natural breakaway motion and guided to the bottom section of the casing. Specially designed for bigger systems with longer heights and higher volumetric flow.

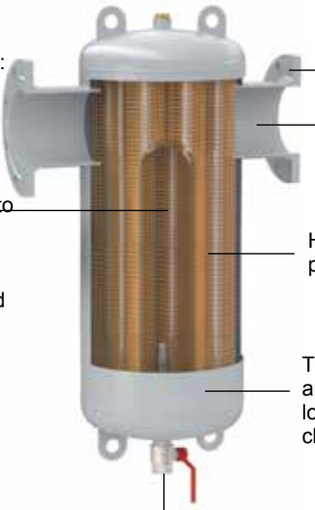

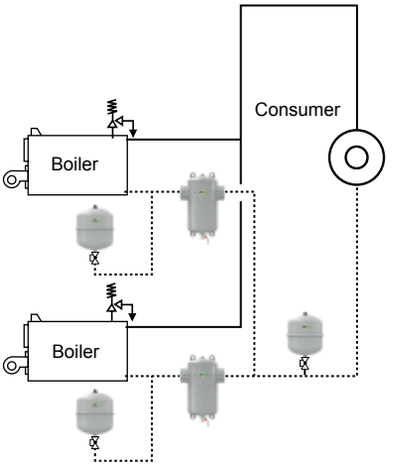

Exdirt "steel" HiCap system dirt and sludge seperation sketch

Overview

- Connection: DN 50 - DN 600
- Volumetric flow: 25 - 3000 m³/h

Exdirt HiCap (Steel) Dirt and Sludge Separator

Steel, 110°C 10 bar

- Welded connection

Type	Article No	Weight kg	Connection	V̇max m³/h	L (mm)	Ø (mm)	H (mm)	HB (mm)
D 60.3 HC	8252105	5	60.3	25.0	260	132	710	370
D 76.1 HC	8252115	5	76.1	40.0	260	132	710	370
D 88.9 HC	8252125	11	88.9	54.0	370	206	865	430
D 114.3 HC	8252135	11	114.3	94.0	370	206	865	430
D 139.7 HC	8252145	24	139.7	144.0	525	354	1125	550
D 168.3 HC	8252155	26	168.3	215.0	525	354	1125	550
D 219.1 HC	8252165	90	219.1	360.0	650	409	1395	600
D 273.0 HC	8252175	108	273.0	575.0	750	480	1509	800
D 323.9 HC	8252185	150	323.9	810.0	850	634	2125	900

Material Group : 83



Steel, 110°C 10 bar

- Flange connection

Type	Article No	Weight kg	Connection	V̇max m³/h	L (mm)	Ø (mm)	H (mm)	HB (mm)
D 50 HC	8252305	11	DN 50/PN 16	25.0	350	132	710[1)]	370
D 65 HC	8252315	12	DN 65/PN 16	40.0	350	132	710[1)]	370
D 80 HC	8252325	18	DN 80/PN 16	54.0	470	206	865[1)]	430
D 100 HC	8252335	21	DN 100/PN 16	94.0	470	206	865[1)]	430
D 125 HC	8252345	60	DN 125/PN 16	144.0	635	354	1125[1)]	550
D 150 HC	8252355	64	DN 150/PN 16	215.0	635	354	1125[1)]	550
D 200 HC	8252365	110	DN 200/PN 16	360.0	775	409	1395	600
D 250 HC	8252375	146	DN 250/PN 16	575.0	890	480	1509	800
D 300 HC	8252385	194	DN 300/PN 16	810.0	1005	634	2125	900
D 350 HC	8252915	273	DN 350/PN 16	1000.0	1128	634	2400	Upon request
D 400 HC	8252925	354	DN 400/PN 16	1300.0	1226	750	2680	Upon request
D 450 HC	8252945	467	DN 450/PN 16	1700.0	1330	750	2970	Upon request
D 500 HC	8252955	701	DN 500/PN 16	2120.0	1430	1000	3100	Upon request
D 600 HC	8252965	913	DN 600/PN 16	3000.0	1630	1200	3250	Upon request

Material Group : 83

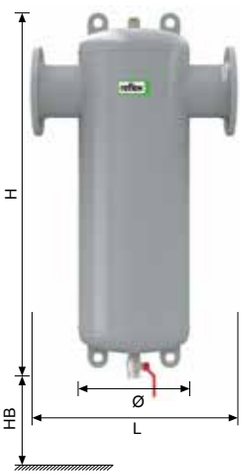

Exdirt R-HC

The sludge/dirt separation in the Reflex Exdirt R - HC works on a similar principle to micro-bubble separation: The flow is guided through an area with a greater cross-section than the connection dimensions in order to reduce the flow speed. The ensuing turbulence caused by the tube mesh causes heavy materials to move in an undetermined direction. Depending on the volume flow, density, and volume, parts of these sludge particles are supported in their natural breakaway motion and guided to the bottom section of the casing. Specially designed for bigger systems with longer heights and higher volumetric flow

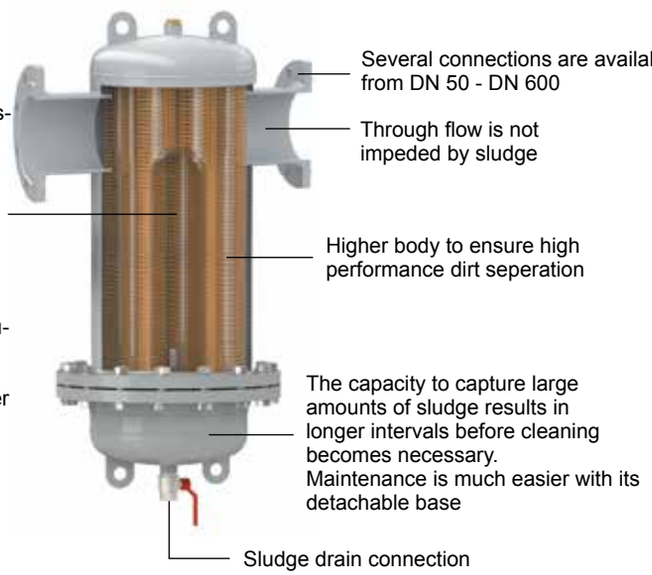

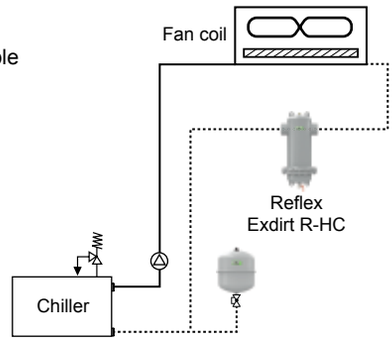

Exdirt "steel" HiCap system with inspection flange dirt and sludge seperation sketch

Overview

- Connection: DN 50 - DN 600
- Volumetric flow: 25 - 3000 m³/h

Exdirt HiCap (Steel) Dirt and Sludge Separator - with inspection flange

Steel, 110°C 10 bar

- Welded connection, inspection flange

Type	Article No	Weight kg	Connection	V̇max m³/h	L (mm)	Ø (mm)	H (mm)	HB (mm)
D 60.3 R-HC	8252205	18	60.3	25.0	260	132	710	370
D 76.1 R-HC	8252215	19	76.1	40.0	260	132	710	370
D 88.9 R-HC	8252225	57	88.9	54.0	370	206	865	430
D 114.3 R-HC	8252235	70	114.3	94.0	370	206	865	430
D 139.7 R-HC	8252245	120	139.7	144.0	525	354	1125	550
D 168.3 R-HC	8252255	125	168.3	215.0	525	354	1125	550
D 219.1 R-HC	8252265	140	219.1	360.0	650	409	1395	600
D 273.0 R-HC	8252275	196	273.0	575.0	750	480	1509	800
D 323.9 R-HC	8252285	277	323.9	810.0	850	634	2125	900

Material Group : 83



Steel, 110°C 10 bar

- Flange connection, inspection flange

Type	Article No	Weight kg	Connection	V̇max m³/h	L (mm)	Ø (mm)	H (mm)	HB (mm)
D 50 R-HC	8252405	20	DN 50/PN 16	25.0	350	132	710	370
D 65 R-HC	8252415	21	DN 65/PN 16	40.0	350	132	710	370
D 80 R-HC	8252425	68	DN 80/PN 16	54.0	470	206	865	430
D 100 R-HC	8252435	76	DN 100/PN 16	94.0	475	206	865	430
D 125 R-HC	8252445	120	DN 125/PN 16	144.0	635	354	1125	550
D 150 R-HC	8252455	140	DN 150/PN 16	215.0	635	354	1125	550
D 200 R-HC	8252465	181	DN 200/PN 16	360.0	775	409	1395	600
D 250 R-HC	8252475	220	DN 250/PN 16	575.0	890	480	1509	800
D 300 R-HC	8252485	305	DN 300/PN 16	810.0	1005	634	2125	900
D 350 R-HC	8252917	Upon request	DN 350/PN 16	1000.0	1128	634	2400	Upon request
D 400 R-HC	8252927	Upon request	DN 400/PN 16	1300.0	1226	750	2680	Upon request
D 450 R-HC	8252947	Upon request	DN 450/PN 16	1700.0	1330	750	2970	Upon request
D 500 R-HC	8252957	Upon request	DN 500/PN 16	2120.0	1430	1000	3100	Upon request
D 600 R-HC	8252967	Upon request	DN 600/PN 16	3000.0	1630	1200	3250	Upon request

Material Group : 83

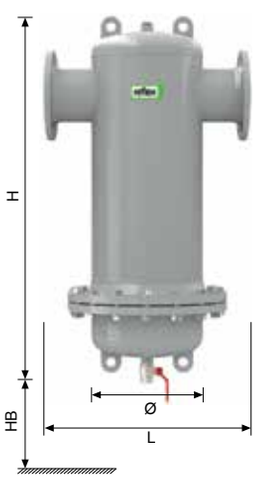

Extwin

The core element is a tube mesh construction that has proven itself over the decades, with an extremely low rate of pressure loss in the fl ow direction and a high rate of pressure loss in the transverse direction. This drastically reduces the amount of turbulence and guides the sludge particles to a part-stabilized area

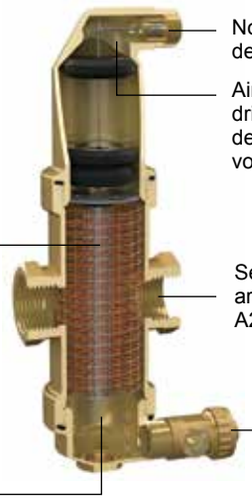

Non-leak, non-shut-off deaeration valve

Air chamber with special design; driving impurities do not reach the deaeration valve; high air chamber volume to counteract pressure fluctuations

Several connections are available from A22 to 1”

Space-saving, perpendicular draining tap. The collected sludge is quickly and forcefully pressed out when the tap is opened so that it can be closed again right away. The entire process takes just a few seconds

The capacity to capture large amounts of sludge results in longer intervals before cleaning becomes necessary

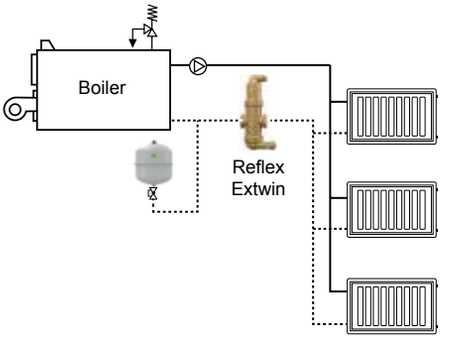

Extwin “brass” system combined micro-bubble, dirt and sludge seperation sketch

Overview

- Dimension-dependent brass designs
- Installation: horizontal, vertical
- Connection options: thread and clamping ring,
- Connection diameter A22 - 1”
- Max. operating pressure: 10 bar
- Max. operating temperature 110°C

Benefits in brief

- Removes free circulating dirt and sludge particles
- Functions in fully automated continuous operation
- Maintenance takes just 5 seconds
- Permanent free throughflow opening for the water
- No shut-off valves or bypass lines required. Desludging possible during system operation
- Full range in terms of operating pressures and materials
- Continually ensures flawless functionality of heat generators, thermostat valves, etc.
- Reduces the risk of system defects and breakdowns in the long term

Extwin (Brass) Combined Micro-Bubble, Dirt, and Sludge Separator

Brass, 110°C 10 bar

- Horizontal

Type	Article No	Weight kg	Connection	V̇max m³/h	L (mm)	Ø (mm)	H (mm)
TW 22	9253000	1,7	22 mm[1)]	1.25	105	63	261
TW 1	9253010	1,7	Rp 1	2.00	84	63	261

Material Group : 82

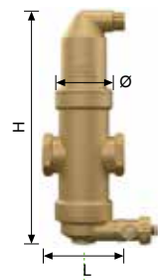

Brass, 110°C 10 bar

- Horizontal M with magnetic insert

Type	Article No	Weight kg	Connection	V̇max m³/h	L (mm)	Ø (mm)	H (mm)
TW 22 M	9257000	1,8	22 mm[1)]	1.25	105	63	261
TW 1 M	9257010	1,8	Rp 1	2.00	84	63	261

Material Group : 82



Brass, 110°C 10 bar

- Vertical

Type	Article No	Weight kg	Connection	V̇max m³/h	L (mm)	Ø (mm)	H (mm)
TW 22 V	9253500	2,1	22 mm[1)]	1.25	105	63	261

Material Group : 82

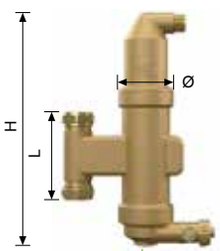

Brass, 110°C 10 bar

- Vertical M with magnetic insert

Type	Article No	Weight kg	Connection	V̇max m³/h	L (mm)	Ø (mm)	H (mm)
TW 22 V-M	9257500	2,1	22 mm[1)]	1.25	105	63	261

Material Group : 82



Extwin

The Reflex Extwin combines the modes of operation of the Exvoid and Exdirt, the principle corresponding with the functionality set out on pages 81 & 84

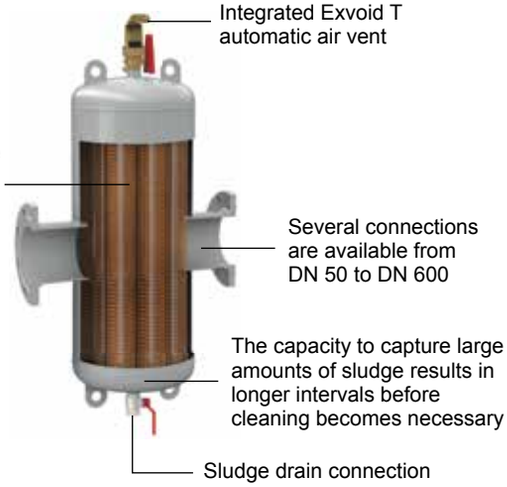

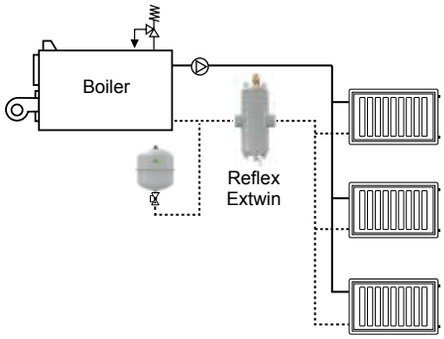

Extwin "Steel" system with combined micro-bubble dirt and sludge seperation sketch

Overview

- Connection: DN 50 - DN 600
- Volumetric flow: 12.5-405 m3/h
- Exiso thermal insulation: DN 50 - DN 125

Extwin (Steel) Combined Micro-Bubble, Dirt, and Sludge Separator

Steel, 110°C 10 bar

- Welded connection

Type	Article No	Weight kg	Connection	V̇max m³/h	L (mm)	Ø (mm)	H (mm)	HB (mm)
TW 60.3	8253100	7	60,3	12,5	260	132	770	370
TW 76.1	8253110	8	76,1	20,0	260	132	770	370
TW 88.9	8253120	15	88,9	27,0	370	206	925	430
TW 114.3	8253130	17	114,3	47,0	370	206	925	430
TW 139.7	8253140	32	139,7	72,0	525	354	1185	550
TW 168.3	8253150	40	168,3	108,0	525	354	1185	550
TW 219.1	8253160	92	219,1	180,0	650	409	1455	600
TW 273.0	8253170	196	273,0	288,0	750	480	1855	800
TW 323.9	8253180	266	323,9	405,0	850	634	2175	900

Material Group : 83

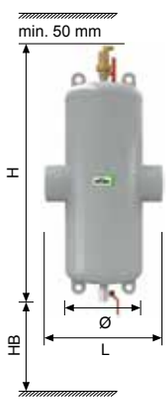

Steel, 110°C 10 bar

- Flange connection

Type	Article No	Weight kg	Connection	V̇max m³/h	L (mm)	Ø (mm)	H (mm)	HB (mm)
TW 50	8253300	13	DN 50/PN 16	12.5	350	132	770	370
TW 65	8253310	13	DN 65/PN 16	20.0	350	132	770	370
TW 80	8253320	37	DN 80/PN 16	27.0	470	206	925	430
TW 100	8253330	43	DN 100/PN 16	47.0	475	206	925	430
TW 125	8253340	70	DN 125/PN 16	72.0	635	354	1185	550
TW 150	8253350	75	DN 150/PN 16	108.0	635	354	1185	550
TW 200	8253360	108	DN 200/PN 16	180.0	775	409	1455	600
TW 250	8253370	230	DN 250/PN 16	288.0	890	480	1855	800
TW 300	8253380	300	DN 300/PN 16	405.0	1005	634	2175	900
TW 350	8253910	Upon request	DN 350/PN 16	500.0	1128	634	2600	Upon request
TW 400	8253920	Upon request	DN 400/PN 16	650.0	1226	750	2900	Upon request
TW 450	8253940	Upon request	DN 450/PN 16	850.0	1330	750	3150	Upon request
TW 500	8253950	Upon request	DN 500/PN 16	1060.0	1430	1000	3500	Upon request
TW 600	8253960	Upon request	DN 600/PN 16	1530.0	1630	1200	4100	Upon request

Material Group : 83

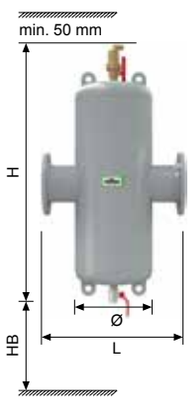

Benefits in brief

- Combines the protective functions of Reflex Exvoid and Exdirt in a single component in chilled water systems
- Single installation, doubled effect
- A far more cost-effective solution than using both the individual components
- Full range in terms of operating pressures and materials

Extwin R

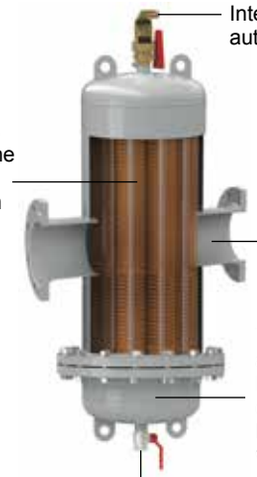

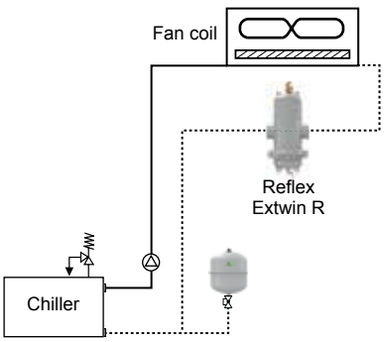

Extwin “Steel” system with inspection flange combined micro-bubble, dirt and sludge seperation sketch

Overview

- Connection: DN 50 - DN 600
- Volumetric fl ow: 12.5 - 1530 m³/h
- Exiso thermal insulation: DN 50 - DN 125

Extwin (Steel) Combined Micro-Bubble, Dirt, and Sludge Separator - with inspection flange

Steel, 110°C 10 bar

- Welded connection, inspection flange

Type	Article No	Weight kg	Connection	V̇max m³/h	L (mm)	Ø (mm)	H (mm)	HB (mm)
TW 60.3 R	8253200	16	60,3	12,5	350	132	770	370
TW 76.1 R	8253210	16	76,1	20,0	350	132	770	370
TW 88.9 R	8253220	50	88,9	27,0	470	206	925	430
TW 114.3 R	8253230	65	114,3	47,0	475	206	925	430
TW 139.7 R	8253240	102	139,7	72,0	635	354	1185	550
TW 168.3 R	8253250	110	168,3	108,0	635	354	1185	550
TW 219.1 R	8253260	180	219,1	180,0	775	409	1455	600
TW 273.0 R	8253270	219	273,0	288,0	890	480	1855	800
TW 323.9 R	8253280	320	323,9	405,0	1005	634	2175	900

Material Group : 83



Steel, 110°C 10 bar

- Flange connection, inspection flange

Type	Article No	Weight kg	Connection	V̇max m³/h	L (mm)	Ø (mm)	H (mm)	HB (mm)
TW 50 R	8253400	21	DN 50/PN 16	12.5	350	132	770	370
TW 65 R	8253410	22	DN 65/PN 16	20.0	350	132	770	370
TW 80 R	8253420	71	DN 80/PN 16	27.0	470	206	925	430
TW 100 R	8253430	78	DN 100/PN 16	47.0	475	206	925	430
TW 125 R	8253440	114	DN 125/PN 16	72.0	635	354	1185	550
TW 150 R	8253450	120	DN 150/PN 16	108.0	635	354	1185	550
TW 200 R	8253460	200	DN 200/PN 16	180.0	775	409	1455	600
TW 250 R	8253470	235	DN 250/PN 16	288.0	890	480	1855	800
TW 300 R	8253480	340	DN 300/PN 16	405.0	1005	634	2175	900
TW 350 R	8253912	Upon request	DN 350/PN 16	500.0	1128	634	2600	Upon request
TW 400 R	8253922	Upon request	DN 400/PN 16	650.0	1226	750	2900	Upon request
TW 450 R	8253942	Upon request	DN 450/PN 16	850.0	1330	750	3150	Upon request
TW 500 R	8253952	Upon request	DN 500/PN 16	1060.0	1430	1000	3500	Upon request
TW 600 R	8253962	Upon request	DN 600/PN 16	1530.0	1630	1200	4100	Upon request

Material Group : 83

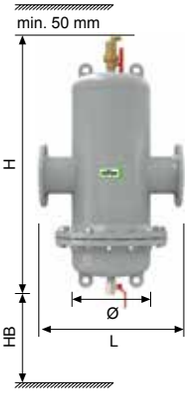

Benefits in brief

- Combines the protective functions of Reflex Exvoid and Exdirt in a single component in chilled water systems
- Single installation, doubled effect
- A far more cost-effective solution than using both the individual components
- Full range in terms of operating pressures and materials
- Easier maintenance due to detachable base

Extwin HC

The Reflex Extwin HC combines the modes of operation of the Exvoid and Exdirt, the principle corresponding with the functionality set out on pages 81 & 84 Specially designed for bigger systems with longer heights and higher volumetric flow.

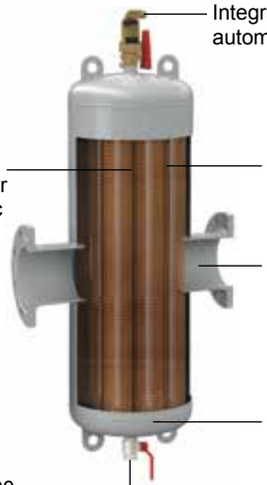

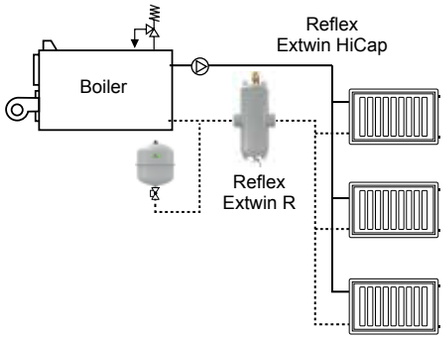

Extwin "Steel" HiCap system combined micro-bubble, , dirt and sludge seperation sketch

Overview

- Connection: DN 50 - DN 600
- Volumetric flow: 25 - 3000 m³/h

Extwin HiCap (Steel) Combined Micro-Bubble, Dirt, and Sludge Separator

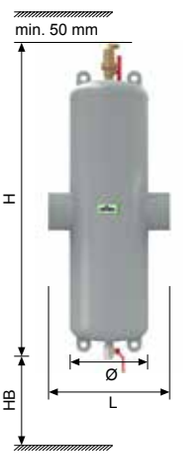

Steel, 110°C 10 bar

- Welded connection

Type	Article No	Weight kg	Connection	V̇max m³/h	L (mm)	Ø (mm)	H (mm)	HB (mm)
TW 60.3 HC	8252105	Upon request	60,3	25.0	260	132	1050	Upon request
TW 76.1 HC	8252115	Upon request	76,1	40.0	260	132	1050	Upon request
TW 88.9 HC	8252125	Upon request	88,9	54.0	370	206	1285	Upon request
TW 114.3 HC	8252135	Upon request	114,3	94.0	370	206	1285	Upon request
TW 139.7 HC	8252145	Upon request	139,7	144.0	525	354	1710	Upon request
TW 168.3 HC	8252155	Upon request	168,3	215.0	525	354	1710	Upon request
TW 219.1 HC	8252165	Upon request	219,1	360.0	650	409	2035	Upon request
TW 273.0 HC	8252175	Upon request	273,0	575.0	750	480	2764	Upon request
TW 323.9 HC	8252185	Upon request	323,9	810.0	850	634	3330	Upon request

Material Group : 83

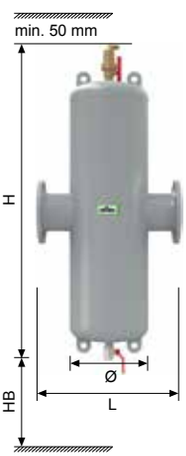

Steel, 110°C 10 bar

- Flange connection

Type	Article No	Weight kg	Connection	V̇max m³/h	L (mm)	Ø (mm)	H (mm)	HB (mm)
TW 50 HC	8253305	13	DN 50/PN 16	25.0	350	132	1050	370
TW 65 HC	8253315	13	DN 65/PN 16	40.0	350	132	1050	370
TW 80 HC	8253325	37	DN 80/PN 16	54.0	470	206	1285	430
TW 100 HC	8253335	43	DN 100/PN 16	94.0	475	206	1285	430
TW 125 HC	8253345	70	DN 125/PN 16	144.0	635	354	1710	550
TW 150 HC	8253355	75	DN 150/PN 16	215.0	635	354	1710	550
TW 200 HC	8253365	108	DN 200/PN 16	360.0	775	409	2035	600
TW 250 HC	8253375	230	DN 250/PN 16	575.0	890	480	2764	800
TW 300 HC	8253385	300	DN 300/PN 16	810.0	1005	634	3330	900
TW 350 HC	8253915	331	DN 350/PN 16	1000.0	1128	634	3600	Upon request
TW 400 HC	8253925	429	DN 400/PN 16	1300.0	1226	750	4000	Upon request
TW 450 HC	8253945	573	DN 450/PN 16	1700.0	1330	750	4500	Upon request
TW 500 HC	8253955	853	DN 500/PN 16	2120.0	1430	1000	4900	Upon request
TW 600 HC	8253965	1217	DN 600/PN 16	3000.0	1630	1200	5800	Upon request

Material Group : 83

Benefits in brief

- Combines the protective functions of Reflex Exvoid and Exdirt in a single component in chilled water systems
- Single installation, doubled effect
- A far more cost-effective solution than using both the individual components
- Full range in terms of operating pressures and materials
- Specially designed for bigger systems with longer heights and higher volumetric flow

Extwin R-HC

The reflex Extwin combines the modes of operation of the Exvoid and Exdirt, the principle corresponding with the functionality set out on pages 81 & 84. Specially designed for bigger systems with longer heights and higher volumetric flow

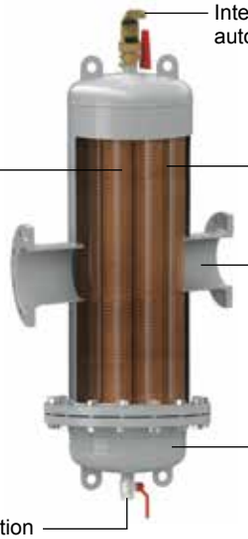

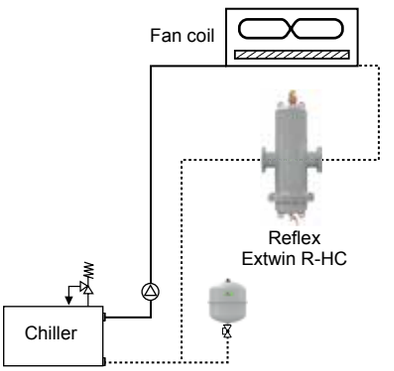

Extwin "Steel" HiCap with inspection opening system combined micro-bubble, dirt and sludge seperation sketch

Extwin (Steel) Combined Micro-Bubble, Dirt, and Sludge Separator - with inspection flange

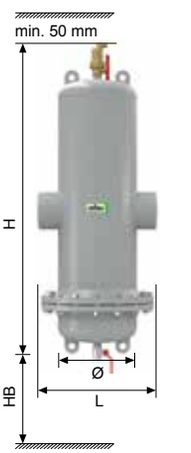

Steel, 110°C 10 bar

- Welded connection, inspection flange

Type	Article No	Weight kg	Connection	V̇max m³/h	L (mm)	Ø (mm)	H (mm)	HB (mm)
TW 60.3 R-HC	8253205	16	60.3	25.0	260	132	1050	370
TW 76.1 R-HC	8253215	16	76.1	40.0	260	132	1050	370
TW 88.9 R-HC	8253225	50	88.9	54.0	370	206	1285	430
TW 114.3 R-HC	8253235	65	114.3	94.0	370	206	1285	430
TW 139.7 R-HC	8253245	102	139.7	144.0	525	354	1710	550
TW 168.3 R-HC	8253255	110	168.3	215.0	525	354	1710	550
TW 219.1 R-HC	8253265	180	219.1	360.0	650	409	2035	600
TW 273.0 R-HC	8253275	219	273.0	575.0	750	480	2764	800
TW 323.9 R-HC	8253285	320	323.9	810.0	850	634	3330	900

Material Group : 83



Steel, 110°C 10 bar

- Flange connection, inspection flange

Type	Article No	Weight kg	Connection	V̇max m³/h	L (mm)	Ø (mm)	H (mm)	HB (mm)
TW 50 R-HC	8253405	21	DN 50/PN 16	25.0	350	132	1050	370
TW 65 R-HC	8253415	22	DN 65/PN 16	40.0	350	132	1050	370
TW 80 R-HC	8253425	71	DN 80/PN 16	54.0	470	206	1285	430
TW 100 R-HC	8253435	78	DN 100/PN 16	94.0	475	206	1285	430
TW 125 R-HC	8253445	114	DN 125/PN 16	144.0	635	354	1710	550
TW 150 R-HC	8253455	120	DN 150/PN 16	215.0	635	354	1710	550
TW 200 R-HC	8253465	200	DN 200/PN 16	360.0	775	409	2035	600
TW 250 R-HC	8253475	235	DN 250/PN 16	575.0	890	480	2764	800
TW 300 R-HC	8253485	340	DN 300/PN 16	810.0	1005	634	3330	900
TW 350 R-HC	8253917	Upon request	DN 350/PN 16	1000.0	1128	634	3600	Upon request
TW 400 R-HC	8253927	Upon request	DN 400/PN 16	1300.0	1226	750	4000	Upon request
TW 450 R-HC	8253947	Upon request	DN 450/PN 16	1700.0	1330	750	4500	Upon request
TW 500 R-HC	8253957	Upon request	DN 500/PN 16	2120.0	1430	1000	4900	Upon request
TW 600 R-HC	8253967	Upon request	DN 600/PN 16	3000.0	1630	1200	5800	Upon request

Material Group : 83

Benefits in brief

- Combines the protective functions of Reflex Exvoid and Exdirt in a single component in chilled water systems
- Single installation, doubled effect
- A far more cost-effective solution than using both the individual components
- Full range in terms of operating pressures and materials
- Specially designed for bigger systems with longer heights and higher volumetric flow
- Easier maintenance due to detachable base

Accessories

Reflex Exferro

- Solenoid insert for sludge separator
- 110°C/10 bar
- Magnetic bar screwed into thermowell/T-piece
- For uptake of ferromagnetic substances



Type	Article No	Area Of Application	Installation Length (mm)
DN 50/114.3	9258300	DN 50 - DN 100	300
D 125/219.1	9258310	DN 125 - DN 200	350
D 250/323.9	9258320	DN 250 - DN 300	400
D 350/600	9258330	> DN 100	500

Material Group : 83

Reflex Exiso

- Brass Exvoid, A 22-A 1 1/2 - 2”
- Brass Exdirt D 22-D 1 1/2 - 2”



Type	Article No	Material Group	Insulation thick-ness (mm)	Ø (mm)	H (mm)
A/D 22-1 ½	9254811	82	15	1252	15-275
A/D 2”	9254801	82	15	Upon request	

- Thermal insulation for Exvoid and Exdirt, steel version

Type	Article No	Material Group	Insulation thick-ness (mm)	Ø (mm)	H (mm)
50-76.1	9254831	83	30.5	228	447
80-114.1	9254841	83	30.5	290	567
125-168.3	9254851	83	30.5	395	742

Pressure Loss Chart

- Exvoid, Exdirt, Extwin

Connection	kvs, m³/h	V max. m³/h	Connection	kvs, m³/h	V max. m³/h
Rp ¾	10.7	1.25	DN 80	158.5	27.0
Rp 1	17.2	2.00	DN 100	244.3	47.0
Rp 1 ¼	31.8	3.70	DN 125	351.3	72.0
Rp 1 ½	40.0	5.00	DN 150	487.9	108.0
Rp 2	56.1	7.50	DN 200	780.6	180.0
DN 50	72.2	12.50	DN 250	1185.7	288.0
DN 65	121.7	20.00	DN 300	1696.4	405.0

Pressure loss calculation for all volume flows

$$\Delta p = \left(\frac{\dot{V}}{Kvs}\right)^2 \times 1\ bar, \dot{V} \le \dot{V}max$$

Example:

Heating circuit 70/55°C, heat generator output 40 kW

$$\Delta p = \left(\frac{2.3\ m./h}{31.8\ m^3/h}\right)^2 \times 1\ bar = 5.23 \times 10^{-3}\ bar$$

$$\dot{V} = \frac{40\ kW}{4.2\ kJ/(kg\ K)\ .\ (70\text{-}55)\ K} \times 3.600\ \frac{s}{h}\ \frac{1\ m^3}{1.000\ kg}$$

= 2.3 m³/h → selected size Rp 1 ¼

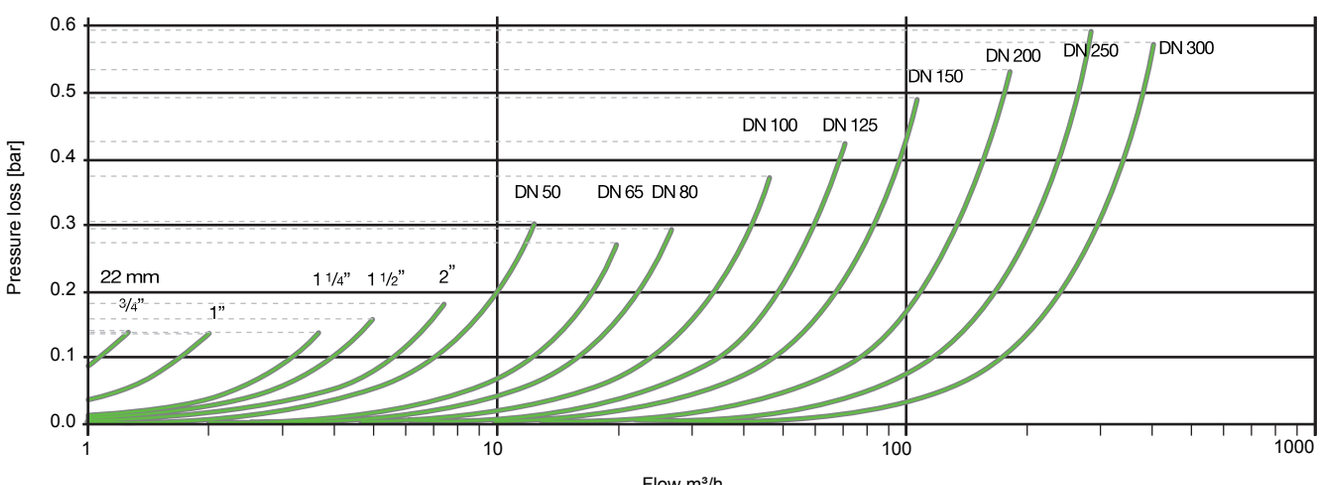

Reflex EB Dirt Collector

- Separates and collects dirt (magnetite, welding grid, sand etc.) from the systemwater
- Protects and improves average lifetime of components (pumps, valves, heat exchangers etc.)
- Minimum pressure drop
- Meets or exceeds EC norms for pressure vessels 97/23/EC
- Durable epoxy coating with attractive new colour

CE

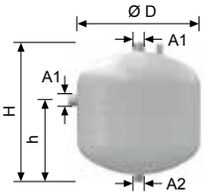

30 litre

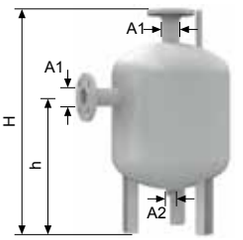

60-750 litre

10 bar	Type 10 Bar / 120°C	Article No	Material Group	Ø D (mm)	H (mm)	h (mm)	A1	A2
	EB 30	8636000	25	409	455	270	R 1 ¼	R 1
	EB 60	8635100	25	409	770	465	DN 50/PN 16	R 1
	EB 80	8636200	25	480	765	468	DN 65/PN 16	R 1
	EB 100	8636300	25	480	870	535	DN 80/PN 16	R 1

6 bar	Type 6 Bar / 120°C	Article No	Material Group	Ø D (mm)	H (mm)	h (mm)	A1	A2
	EB 180	8632000	25	600	1110	726	DN 100/PN 6	R 1
	EB 300	8633000	25	600	1600	1141	DN 125/PN 6	R 1
	EB 400	8634000	25	750	1500	1027	DN 150/PN 6	R 1
	EB 750	8634100	25	750	2215	1677	DN 250/PN 6	R 1

Reflex LA Air Seperator

- Separates gas bubbles (air, nitrogen etc.) from heating and cooling systems
- Increases system efficiency and average lifetime of components
- Minimum pressure drop
- Most suitable for rooftop plantrooms at low pressure
- Welded collection
- Durable epoxy coating with attractive new colour

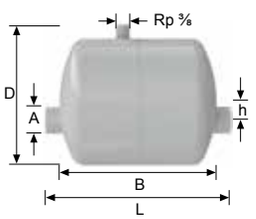

LA 32 - LA 50

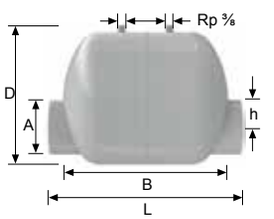

LA 65 - LA 200

10 bar	Type 10 Bar / 120°C	Article No	Material Group	L (mm)	Ø D (mm)	H (mm)	A
	LA 32	8671000	72	300	30	206	DN 32
	LA 40	8672000	72	300	40	206	DN 40
	LA 50	8673000	72	300	40	206	DN 50
	LA 65	8674000	72	390	60	280	DN 65
	LA 80	8675000	72	390	60	280	DN 80
	LA 100	8676000	72	390	50	280	DN 100
	LA 125	8677000	72	390	40	280	DN 125
	LA 150	8678000	72	590	90	409	DN 150
	LA 200	8679000	72	590	40	409	DN 200

Reflex T Expansion Trap

- Separates water from steam in heating installation ≥ 100°C
- To be connected to the safety valve according to DIN EN 12828
- Allows evaporation without danger to the ambience
- Durable epoxy coating with attractive new colour

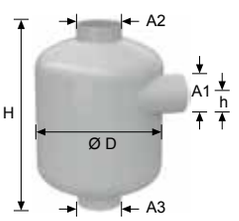

Type	Article No	Material Group	H (mm)	h (mm)	Ø D (mm)	A1 DN	A2 DN	A3 DN
T 170	8680000	73	328	55	206	50	65	65
T 270	8681000	73	400	65	280	65	80	80
T 380	8682000	73	528	75	490	80	100	100
T 480	8683000	73	710	115	480	125	150	150
T 550	8684000	73	896	125	634	150	200	200

Hot Water Storage Tanks

- Storatherm Heat / Accumulation heat balancing tanks - steel
- Storatherm Aqua / Hot water heaters for sanitary use - glass lined



Storatherm Heat

Buffer tanks for heating & cooling*

Buffer tank for heating & cooling



H 200-5000
(Without flange and without coil)
Page 98



H 300-5000/R
(With flange and without coil)
Page 99



H 300-5000/1
(Without flange and with single coil)
Page 100



H 500-2000/2
(Without flange and with double coil)
Page 101

Buffer tank with insulation for heating



HF 200-2000**
Page 98



HF 300-2000/R**
Page 99



HF 300-2000/1
Page 100



HF 500-2000/2
Page 101

Potable buffer tank with insulation



HC 500-1500/1
Page 102



HC 500-1500/2
Page 102

With production of sanitary hot water

Insulation



HWF 200-2000
HW 3000-5000
Page 103

* Cooling application: Extra insulation to be added by contractor on site.
** Insulation available for 3000 - 5000 litres as extra package

Storatherm Aqua

Glass-lined hot water heaters

Single Coil Tanks



AB 100/1-500/1
AF 100/1-500/1
Page 104



AF 750/1-3000/1
Page 104



AH 300/1-1000/1
Page 108



AC 150-250/1
Page 105



AC 120/1
Page 105



AC 600/200-900/200 (combi)
Page 109

Double Coil Tanks



AB 200/2-500/2
AF 200/2-500/2
Page 106



AF 750/2-3000/2
Page 106



AH 300/2-1000/2
Page 108

Storage Tanks



AL 300-500/R
Page 110



AL 750-1000/R
Page 110



AL 1500-3000/R2
Page 111



AL 1500-3000/R3
Page 111



AL 3000/R4
Page 111

Storatherm Heat

Buffer Storage Tank For Heating

- Storage tank made of heavy gauge steel S235JRG2 (RSt 37-2)
- Up to 2000 litres delivered with removable 90 mm PU flexible foam insulation with white or silver foil cladding
- For cooling water systems, Storatherm buffer storage tanks are also available without foam insulation (type “H”) ; in this case, appropriate diffusion-resistant insulation must be provided on-site
- Untreated on the inside, with an outer plastic coating
- Max. operating pressure for storage tank 3 bar (6 bar above 1500 litres)
- Max. operating temperature for storage tank 95°C
- Storatherm Heat HF: buffer storage tank with insulation but without heating coil or inspection flange
- Storatherm Heat H: same as above but without insulation, heating coil or inspection flange
- Insulation for heating water systems for 3000 l, 4000 l and 5000 l sizes is available separately (page 103)



H 200 - 5000



HF 200 - 2000

Buffer storage tank with jacket, without heating coil or inspection flange

Formerly PHH	Storage Tank Type	Article No White	Article No Silver	Material Group	Ø D (mm)	Height H (mm)	Couplings 9x	Inclination Height mm	Weight kg	Heat Loss Kwh/24h	Outer Jacket Fire Classification
	HF 200	8500000	8502000	63	660	1500	Rp 1 ½	1525	51.0	2.2	B2
	HF 300	8500010	8502010	63	777	1320	Rp 1 ½	1355	59.0	2.8	B2
	HF 500	8500020	8502020	63	777	1950	Rp 1 ½	1974	72.0	3.4	B2
	HF 800	8500030	8502030	63	970	1825	Rp 1 ½	1870	124.0	4.0	B2
	HF 1000	8500040	8502040	63	970	2115	Rp 1 ½	2153	139.0	4.4	B2
	HF 1500	8500050	8502050	63	1180	2120	Rp 1 ½	2178	186.0	5.1	B2
	HF 2000	8500060	8502060	63	1380	2122	Rp 1 ½	2200	266.0	5.9	B2

For different insulation colour see page 103

Buffer storage tank without jacket, heating coil or inspection flange

Formerly PH	Storage Tank Type	Article No	Material Group	Ø D (mm)	Height H (mm)	Couplings 9x	Inclination Height mm	Weight kg
	H 200	7788000	63	480	1500	Rp 1 ½	1525	51.0
	H 300	7783000	63	597	1320	Rp 1 ½	1355	59.0
	H 500	7783100	63	597	1950	Rp 1 ½	1975	72.0
	H 800	7783225	63	790	1825	Rp 1 ½	1870	124.0
	H 1000	7783333	63	790	2115	Rp 1 ½	2153	139.0
	H 1500	7783400	63	1000	2120	Rp 1 ½	2178	186.0
	H 2000	7783500	63	1200	2122	Rp 1 ½	2200	266.0
	H 3000	7788100	63	1500	2101	Rp 2	2205	567.0
	H 4000	7788400	63	1500	2676	Rp 2	2756	674.0
	H 5000	7788700	63	1500	3211	Rp 2	3264	811.0



Additional EEHR 3 kW electrical heating element can be added. Assembly on site



Storatherm Heat

Buffer Storage Tank For Heating With Inspection Flange

- Storage tank made of heavy gauge steel S235JRG2 (RSt 37-2)
- Up to 2000 litres delivered with removable 90 mm PU flexible foam insulation with white or silver foil cladding
- For cooling water systems, Storatherm buffer storage tanks are also available without foam insulation (type “H”) ; in this case, appropriate diffusion-resistant insulation must be provided on-site
- Untreated on the inside, with an outer plastic coating
- Max. operating pressure for storage tank 3 bar (6 bar above 1500 litres)
- Max. operating temperature for storage tank 95°C
- Storatherm Heat HF/R: with additional cleaning and inspection flange, LK 150 mm
- Storatherm Heat H/R: same as above but without insulation
- Insulation for heating water systems for 3000 l, 4000 l and 5000 l sizes is available separately



H 300 - 5000/R

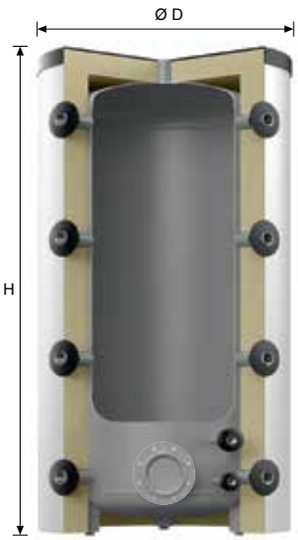

HF 300 - 2000/R

Buffer storage tank without heating coil, with jacket and inspection flange

Formerly PFHF	Storage Tank Type	Article No White	Article No Silver	Material Group	Ø D (mm)	Height H (mm)	Couplings 9x	Inclination Height mm	Weight kg	Heat Loss Kwh/24h	Outer Jacket Fire Classification
	HF 300/R	8500070	8502070	63	777	1320	Rp 1 ½	1355	62.0	2.9	B2
	HF 500/R	8500080	8502080	63	777	1950	Rp 1 ½	1974	75.0	3.8	B2
	HF 800/R	8500090	8502090	63	970	1825	Rp 1 ½	1870	127.0	4.3	B2
	HF 1000/R	8500100	8502100	63	970	2115	Rp 1 ½	2153	142.0	4.7	B2
	HF 1500/R	8500200	8502200	63	1180	2120	Rp 1 ½	2178	189.0	5.5	B2
	HF 2000/R	8500300	8502300	63	1380	2122	Rp 1 ½	2200	269.0	6.4	B2

For different insulation colour see page 103

Buffer storage tank without heating coil and jacket, with inspection flange

Formerly PHF	Storage Tank Type	Article No	Material Group	Ø D (mm)	Height H (mm)	Couplings 9x	Inclination Height mm	Weight kg
	H 300/R	7783600	63	597	1320	Rp 1 ½	1355	58.0
	H 500/R	7783800	63	597	1950	Rp 1 ½	1975	71.0
	H 800/R	7784005	63	790	1825	Rp 1 ½	1870	121.0
	H 1000/R	7784205	63	790	2115	Rp 1 ½	2153	135.0
	H 1500/R	7784400	63	1000	2120	Rp 1 ½	2178	181.0
	H 2000/R	7784600	63	1200	2122	Rp 1 ½	2200	257.0
	H 3000/R	7788200	63	1500	2101	Rp 2	2205	570.0
	H 4000/R	7788500	63	1500	2676	Rp 2	2756	677.0
	H 5000/R	7788800	63	1500	3211	Rp 2	3264	814.0

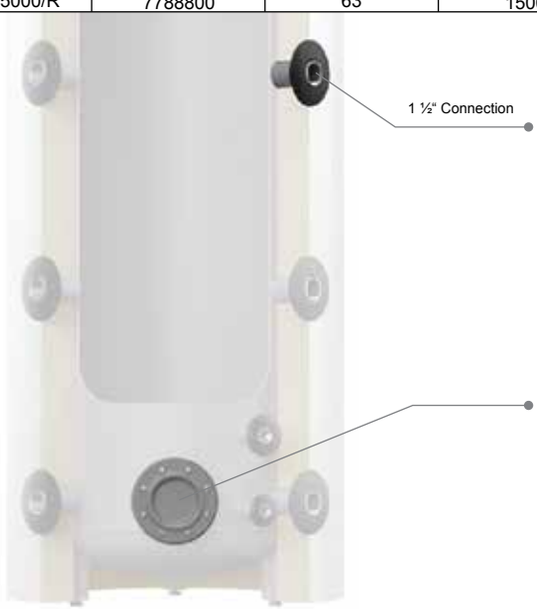


Additional heating input by adding EEHR 3 kW electrical heating element and/or removable heat exchanger Assembly on site



Water to water removable heat exchanger only RWT1

Storatherm Heat

Storatherm Buffer Storage Tank With Single Heating Coil

- Storage tank made of heavy gauge steel S235JRG2 (RSt 37-2)
- Up to 2000 litres delivered with removable 90 mm PU flexible foam insulation with white or silver foil cladding
- For cooling water systems, Storatherm buffer storage tanks are also available without foam insulation (type “H”) ; in this case, appropriate diffusion-resistant insulation must be provided on-site
- Untreated on the inside, with an outer plastic coating
- Max. operating pressure for storage tank 3 bar (6 bar above 1500 litres)
- Max. operating pressure for heat exchanger 16 bar
- Max. operating temperature for storage tank 95°C
- Max. operating temperature for heat exchanger 110°C
- Storatherm Heat HF/1: with a smooth tube heat exchanger for connecting an additional heat source
- Storatherm Heat H/1: same as above but without insulation
- Insulation for heating water systems for 3000 l, 4000 l and 5000 l sizes is available separately
- Additional 3 kW electrical heating element can be added. Assembly on site.



H 300 - 5000/1



HF 300 - 2000/1

Buffer storage tank with jacket and single coil, without inspection flange

Storage Tank Type	Article No White	Article No Silver	Material Group	Ø D (mm)	Height H (mm)	Couplings 9x	Inclination Height mm	Weight kg	Heating Surface m²
HF 300/1	8500400	8502400	63	777	1320	Rp 1 ½	1355	82.0	1.34
HF 500/1	8500500	8502500	63	777	1950	Rp 1 ½	1974	100.0	1.88
HF 800/1	8500600	8502600	63	970	1825	Rp 1 ½	1870	197.0	3.76
HF 1000/1	8500700	8502700	63	970	2115	Rp 1 ½	2153	225.0	4.48
HF 1500/1	8500800	8502800	63	1180	2120	Rp 1 ½	2178	272.0	4.48
HF 2000/1	8500900	8502900	63	1380	2122	Rp 1 ½	2200	352.0	4.48

Formerly PFHW

For different insulation colour see page 103

Buffer storage tank with single coil, without jacket and inspection flange

Storage Tank Type	Article No	Material Group	Ø D (mm)	Height H (mm)	Couplings 9x	Inclination Height mm	Weight kg	Heating Surface m²
H 300/1	7783700	63	597	1320	Rp 1 ½	1355	74.0	1.34
H 500/1	7783900	63	597	1950	Rp 1 ½	1975	95.0	1.88
H 800/1	7784115	63	790	1825	Rp 1 ½	1870	190.0	3.76
H 1000/1	7784315	63	790	2115	Rp 1 ½	2153	216.0	4.48
H 1500/1	7784500	63	1000	2120	Rp 1 ½	2178	265.0	4.48
H 2000/1	7784700	63	1200	2122	Rp 1 ½	2200	341.0	4.48
H 3000/1	7788300	63	1500	2101	Rp 2	2205	637.0	5.00
H 4000/1	7788600	63	1500	2676	Rp 2	2756	754.0	6.00
H 5000/1	7788900	63	1500	3211	Rp 2	3264	871.0	7.00

Formerly PHW

Performance Table

Storage Tank Type	Coil Heating Capacity kW	Performance l/h	Heat Loss Kwh/24h	Outer Jacket Fire Classification
HF 300/1	24	507	3.0	B2
HF 500/1	34	711	3.6	B2
HF 800/1	68	1421	4.1	B2
HF 1000/1	81	1693	4.6	B2
HF 1500/1	81	1693	5.3	B2
HF 2000/1	81	1693	6.2	B2

Storatherm Heat

Storatherm Buffer Storage Tank With Double Heating Coil

- Storage tank made of heavy gauge steel S235JRG2 (RSt 37-2)
- Up to 2000 litres delivered with removable 90 mm PU flexible foam insulation with white or silver foil cladding
- For cooling water systems, Storatherm buffer storage tanks are also available without foam insulation (type “H”) ; in this case, appropriate diffusion-resistant insulation must be provided on-site
- Untreated on the inside, with an outer plastic coating
- Max. operating pressure for storage tank 3 bar (6 bar above 1500 litres)
- Max. operating pressure for heat exchanger 16 bar
- Max. operating temperature for storage tank 95°C
- Max. operating temperature for heat exchanger 110°C
- Storatherm Heat HF/2: with two smooth tube heat exchanger for connecting an additional heat source
- Storatherm Heat H/2: same as above but without insulation
- Insulation for heating water systems for 3000 l, 4000 l and 5000 l sizes is available separately
- Additional 3 kW electrical heating element can be added. Assembly on site.



H 500 - 2000/2

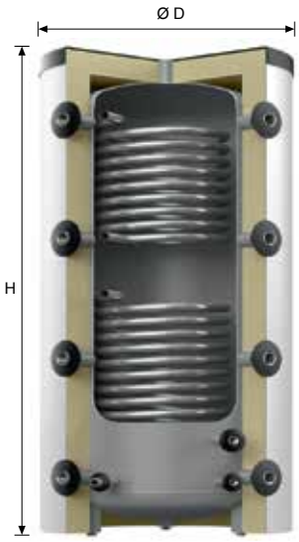

HF 500 - 2000/2

Buffer storage tank with jacket and double coil, without inspection flange

Storage Tank Type	Article No White	Article No Silver	Material Group	Ø D (mm)	Height H (mm)	Couplings 9x	Inclination Height mm	Weight kg	Heating Surface top/buttom m²
HF 500/2	8500513	8500510	63	777	1950	Rp 1 ½	1974	125.0	1.17/1.88
HF 800/2	8500613	8500610	63	970	1825	Rp 1 ½	1870	267.0	1.86/2.47
HF 1000/2	8500713	8500710	63	970	2115	Rp 1 ½	2153	308.0	2.47/3.10
HF 1500/2	8500813	8500810	63	1180	2120	Rp 1 ½	2178	355.0	2.37/3.72
HF 2000/2	8500913	8500910	63	1380	2122	Rp 1 ½	2200	438.0	2.05/3.72

Formerly PFHWW

For different insulation colour see page 103

Buffer storage tank with double coil, without jacket and inspection flange

Storage Tank Type	Article No	Material Group	Ø D (mm)	Height H (mm)	Couplings 9x	Inclination Height mm	Weight kg	Heating Surface top/buttom m²
H 500/2	7787900	63	597	1950	Rp 1 ½	1974	118.0	1.17/1.88
H 800/2	7787910	63	790	1825	Rp 1 ½	1870	259.0	1.86/2.47
H 1000/2	7787920	63	790	2115	Rp 1 ½	2153	279.0	2.47/3.10
H 1500/2	7787930	63	1000	2120	Rp 1 ½	2178	346.0	2.37/3.72
H 2000/2	7787940	63	1200	2122	Rp 1 ½	2200	425.0	2.05/3.72

Formerly PHWW

Performance Table

Storage Tank Type	Coil Heating Capacity top/buttom kW	Performance l/h	Heat Loss Kwh/24h	Outer Jacket Fire Classification
HF 500/2	21/34	442/711	3.6	B2
HF 800/2	24/44	514/934	4.3	B2
HF 1000/2	44/56	934/1172	4.7	B2
HF 1500/2	43/67	896/1406	5.5	B2
HF 2000/2	37/59	775/1236	6.4	B2

Storatherm Heat Combi

Combi Buffer Storage Tank With Single Coil For Heating and Sanitary Hot Water

- Combined storage tank for sanitary hot water and back-up for heating systems
- Storage tank made of heavy gauge steel S235JRG2 (RSt 37-2)
- Sanitary hot water heating through large-volume corrugated stainless steel coil
- Including high capacity single heating coil (HC.../1)
- Incl. 120 mm fleece insulation with a robust outer cladding (silver)
- Untreated on the inside, with an outer plastic coating
- Heating surfaces: Max. 10 bar/110°C
- Buffer storage tank: Max. 3 bar/95°C
- Sanitary hot water: Max. 6 bar/95°C
- Fire classification of jacket-B2

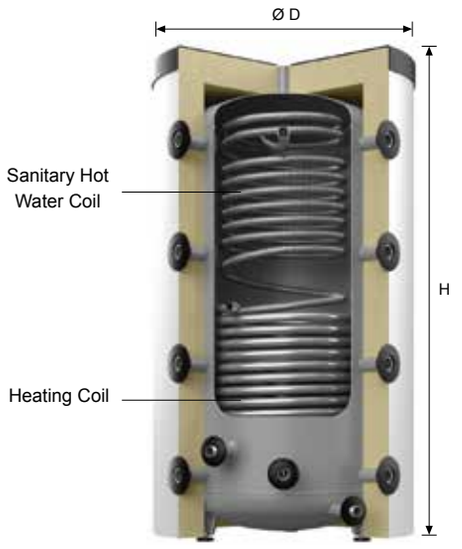

HC 500 - 1500/1

Combi buffer storage tank with jacket and single coil, without inspection flange

Storage Tank Type	Article No	Material Group	Inclination Height mm	Ø D (mm)	Height (mm)	Weight kg	Performance Kw	Heating Surface m²	Outer Jacket Fire Classification
	8601000	63	1974	840	1970	92.0	29	1.60	B2
	8601010	63	1870	1030	1850	131.0	47	2.60	B2
	8601020	63	2153	1030	2140	152.0	47	2.60	B2
	8601030	63	2178	1240	2130	219.0	39	2.15	B2

* Outputs for HW-VL 70-80°C with 0,65 m³/h, TW of 10°C to 45°C

Combi Buffer Storage Tank With Double Coil For Heating and Sanitary Hot Water

- Combined storage tank for sanitary hot water and back-up for heating systems
- Storage tank made of heavy gauge steel S235JRG2 (RSt 37-2)
- Sanitary hot water heating through large-volume corrugated stainless steel coil
- Including high capacity double heating coil (HC.../2)
- Incl. 120 mm fleece insulation with a robust outer cladding (silver)
- Untreated on the inside, with an outer plastic coating
- Heating surfaces: Max. 10 bar/110°C
- Buffer storage tank: Max. 3 bar/95°C
- Sanitary hot water: Max. 6 bar/95°C
- Fire classification of jacket-B2

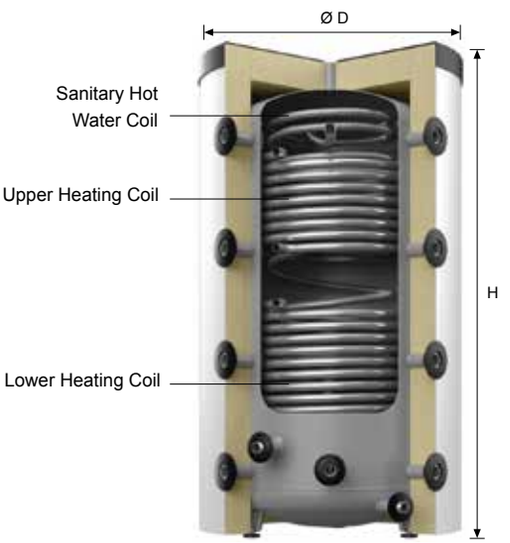

HC 500 - 1500/2

Combi buffer storage tank with jacket and double coil, without inspection flange

Storage Tank Type	Article No	Material Group	Inclination Height mm	Ø D (mm)	Height (mm)	Weight kg	Performance top/buttom kW	Heating Surface top/buttom m²	Outer Jacket Fire Classification
HC 500/2	8601050	63	1974	840	1970	106.0	21/29	1.14/1.60	B2
HC 800/2	8601060	63	1870	1030	1850	152.0	32/47	1.75/2.60	B2
HC 1000/2	8601070	63	2153	1030	2140	179.0	40/47	2.20/2.60	B2
HC 1500/2	8601080	63	2178	1240	2130	237.0	27/39	1.50/2.15	B2

* Outputs for HW-VL 70-80°C with 0,65 m³/h, TW of 10°C to 45°C

Accessories

Reflex HWF Foil Cladding & HW Thermal Insulation

- Additional coloured foil cladding for Reflex buffer storage tank
- Made of 90 mm thick PU flexible foam with a white, vinyl foil cladding
- Removable, for assembly on site
- Fire classification of jacket-B2



Type	Article No				Material Group
	Blue	Orange	Silver	White	
HWF 200	9119330	9119320	9119340	-	64
HWF 300	9119331	9119321	9119341	-	64
HWF 500	9119332	9119322	9119342	-	64
HWF 800	9119484	9119483	9119485	-	64
HWF 1000	9119488	9119487	9119489	-	64
HWF 1500	9119335	9119325	9119345	-	64
HWF 2000	9119336	9119326	9119346	-	64
HW 3000	9119337	9119327	9119347	9119307	64
HW 4000	9119338	9119328	9119348	9119308	64
HW 5000	9119339	9119329	9119349	9119309	64

Formerly PWF

Reflex RWT Ribbed - Tube Heat Exchanger

- For integration with an additional heat generator, e.g. a solar energy system
- Suitable for flange size LK 150
- Counterflange and seal (see below)
- Made of ribbed copper pipe
- Max. operating pressure 10 bar
- Max. operating temperature 90°C

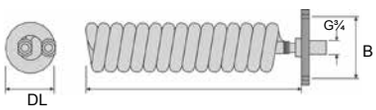



Type	Article No	Material Group	Power* kW	Surface m²	L mm	B mm	D mm
RWT 1	7755900	68	9-11	1.1	420	150	110

* Outputs for HW-VL 70-80°C with 0,65 m³/h, TW of 10°C to 45°C

Reflex EEHR Electric Screw - in Heater 1 1/2”

- As supplementary electrical heating
- Assembly in 1 ½ sleeve
- Safety temperature cut-off (STL) 120°C
- Pilot light
- Degree of protection IP 54
- On-site electrical connection
- Water hardness max. 12 °dH

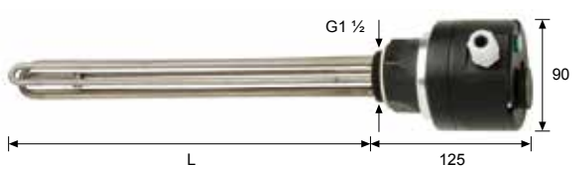

CE

Type	Article No	Material Group	Tank Size litres	Output kW	Voltage V	L mm
EEHR 3.0	7755100	68	100 - 5000	3.00	230/1 PH	375

Spare Parts For EEHR Electricial Screw in Heater

Type	Article No	Material Group	Suitable Types
Thermostat controller	9200445	68	EEHR
Seal 1 ½” for electrical element	9119368	68	EEHR

Storatherm Aqua

Single Coil Hot Water Heater

- Floor standing indirect fired water heater
- Heavy duty S235JRG2 (RSt 37-2) quality steel
- Corrosion resistant glass-lined tank according to German DIN 4753
- Magnesium anode rod(s) for tank protection
- On 1500 - 3000 litres, maintenance free anode (230 V) is mounted
- High capacity, low pressure-drop glass-lined heat exchanger
- Factory mounted thermometer
- Extra thick (50 mm) PU-foam insulation, from 750 litres
- AB steel jacket in various colours,
- AF foil jacket in various colours
- Clean-out for inspection access
- Accessories; For additional heating:
  Extra removable heat exchanger
  RWT1 - Ø150 flange & RWT2 - Ø225 flange
  Extra electrical heating element
  EEHR & EFHR (page 112)
- Max. operating pressure: 10 bar (tank), 16 bar (coil)Z
- Max. operating temperature: 95°C (tank), 110°C (coil)



AB/AF 100/1 - 3000/1

Formerly, SB-SF/1

Type	Article No Blue	Orange	Silver	White	Material Group	Ø D (mm)	Height (mm)	Weight kg	Inclination Height mm	Heating Surface m²
AC 120/1	-	-	-	7759600	60	560	800	56	980	0.71
AB 100/1	7763000	7763100	7763900	7763800	60	512	849	50	960	0.61
AB 150/1	7750100	7750600	7764100	7763600	60	540	1222	67	1290	0.75
AB 200/1	7750200	7750700	7764200	7763300	60	540	1473	79	1530	0.95
AB 300/1	7750300	7750800	7764300	7763400	60	700	1334	117	1472	1.45
AB 400/1	7750400	7750900	7764400	7763500	60	700	1631	137	1738	1.80
AB 500/1	7750500	7751000	7764500	7763700	60	700	1961	189	2044	1.90
AF 150/1	7759200	7743700	7768800	7764000	60	540	1222	67	1290	0.75
AF 200/1	7759300	7743800	7768900	7741800	60	540	1473	79	1530	0.95
AF 300/1	7760400	7760500	7759400	7741900	60	700	1334	117	1472	1.45
AF 400/1	7772200	7757500	7759500	7742000	60	700	1631	137	1738	1.80
AF 500/1	7772000	7743900	7772100	7742100	60	700	1961	189	2044	1.90
AF 750/1	–	–	–	7754600	60	910/750	2023/1932	259	1990	3.70
AF 1000/1	–	–	–	7754700	60	1010/850	2050/1959	309	2025	4.50
AF 1500/1	–	–	–	7800700	60	1200/1000	2216/2019	480	2520	6.00
AF 2000/1	–	–	–	7800800	60	1400/1200	2126/2019	650	2545	7.00
AF 3000/1	–	–	–	7800900	60	1400/1200	2878/2784	790	3300	9.50
AF 200/1-M	–	–	–	7741805	60	540	1473	79	1530	0.95
AF 300/1-M	–	–	–	7741905	60	700	1334	117	1472	1.45
AF 400/1-M	–	–	–	7742005	60	700	1631	137	1738	1.80
AF 500/1-M	–	–	–	7742105	60	700	1961	189	2044	1.90

Performance Table		100/1	120/1	150/1	200/1	300/1	400/1	500/1	750/1	1000/1	1500/1	2000/1	3000/1
Water volume coil	litres	4.3	5	5.2	6.6	10.1	12.6	13.3	32.2	39.1	55.2	64.5	86.7
Heating capacity	kW	19	22	25	31	48	57	65	99	110	156	196	254
Max pressure coil	bar	16	16	16	16	16	16	16	16	16	16	16	16
Max temperature coil	°C	110	110	110	110	110	110	110	110	110	110	110	110
Continuous flow ΔT 35°C	l/h	480	540	615	760	1170	1395	1590	2440	2715	3846	4827	6260
Performance ΔT 35°C	l/10min	204	238	306	382	583	729	881	1371	1714	2566	3373	5245
Performance ΔT 35°C	l/1st hour	593	689	818	1017	1586	1896	2212	3398	3967	5761	7387	8276
Heating time ΔT 50°C	min	18	18	22	22	22	24	26	27	31	34	36	48

Calculation with T = 10°C Cold Water, Hot Water T = 45°C, storage tank T = 60°C, heating ΔT 80 /60°C

Specs of Insulation Jackets		100/1	120/1	150/1	200/1	300/1	400/1	500/1	750/1	1000/1	1500/1	2000/1	3000/1
Insulation thickness	mm	50	50	50	50	50	50	50	80	80	100	100	100
Fire classification/Insulation	DIN 4102-1	B3	B3	B3	B3	B3	B3	B3	B3	B3	B3	B3	B3
Fire classification/Jacket	DIN 4102-1	B2	B2	B2	B2	B2	B2	B2	B2	B2	B2	B2	B2
Fire classification/Cover	DIN 4102-1	B2	B2	B2	B2	B2	B2	B2	B2	B2	B2	B2	B2
Heat loss in 24 hours	Kwh/24h	1.4	1.8	1.6	2.1	2.4	2.8	3	3.7	4.8	5.16	5.73	5.73
Constance cooling	Wh/24h.L.1K	0.311	0.33	0.237	0.233	0.178	0.156	0.133	0.11	0.107	0.076	0.064	0.064
Conductivity therm insulation	W/mK	0.034	0.034	0.034	0.034	0.034	0.034	0.034	0.04	0.04	0.04	0.04	0.04

Storatherm Aqua

Single Coil Hot Water Heater

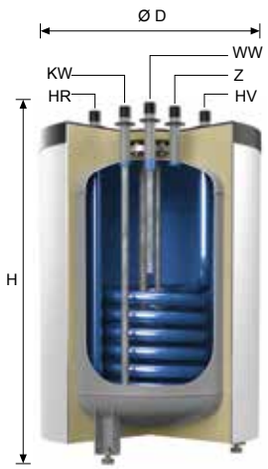

AC 120/1

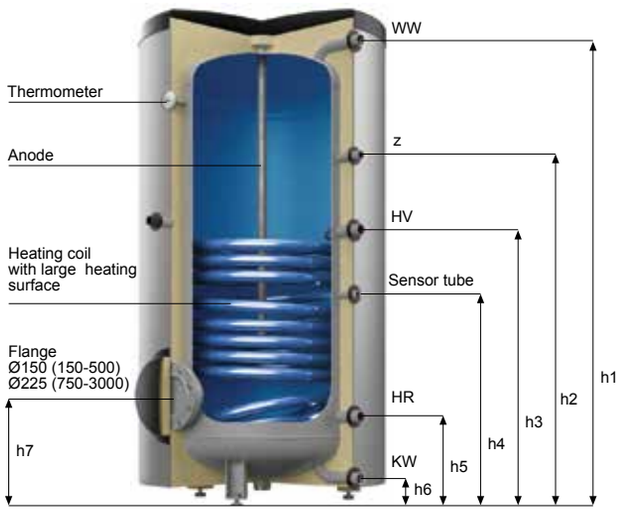

Magnesium anode

optimal protection against corrosion (maintenance free power anode available) are mounted as standard on 1500 - 3000 litres

Glass-lined tank

steel and glass are fused together to achieve the best of both materials - the strength and engineering flexibility of steel and the corrosion resistance of glass 1st class water with respect to hygiene and taste smooth glass-lined which prevents formation of lime deposits on surface

Inspection hole

from 150 litres facilitates cleaning and maintenance could be used to install an additional electrical heating element or auxiliary heat exchanger.

Type		AB/AC/AF	100/1	120/1	150/1	200/1	300/1	400/1	500/1	750/1	1000/1	1500/1	2000/1	3000/1
Capacity		litres	98	115	158	198	300	385	478	750	982	1500	2000	2800
Diameter		mm	512	560	540	540	700	700	700	910	1010	1200	1400	1400
Diameter without cover		mm	Ø	Ø	Ø	Ø	Ø	Ø	Ø	Ø	850	1000	1200	1200
Height		mm	849	800	1222	1473	1334	1631	1961	2000	2025	2216	2126	2875
Height without cover		mm	Ø	Ø	Ø	Ø	Ø	Ø	Ø	1932	1959	2109	2019	2784
Inclination height		mm	960	980	1290	1530	1472	1738	2044	1990	2025	2520	2545	3300
Net weight		kg	38	42	54	65	99	119	170	241	304	480	650	1000
Tank max pressure		bar	10	10	10	10	10	10	10	10	10	10	10	10
Tank max temperature		°C	95	95	95	95	95	95	95	95	95	95	95	95
Hot water outlet	WW	R	¾"	¾"	¾"	¾"	1"	1"	1"	1 ¼"	1 ¼"	2"	2"	2"
		(h1) mm	740	835	1106	1366	1226	1523	1853	1886	1900	248	1937	2691
Cold water inlet	KW	R	¾"	¾"	3/4"	3/4"	1"	1"	1"	1 ¼"	1 ¼"	2"	2"	2"
		(h6) mm	55	835	55	55	55	55	55	99	103	105	118	156
Circulation	Z	R	¾"	¾"	3¾"	¾"	¾"	¾"	¾"	¾"	¾"	1 ¼"	1 ¼"	2"
		(h2) mm	605	835	732	899	918	1111	1264	1417	1489	1660	1670	2406
Boiler supply	HV	R	1"	¾"	1"	1"	1"	1"	1"	1 ¼"	1 ¼"	1 ¼"	1 ¼"	1 ¼"
		(h3) mm	523	835	596	686	720	908	965	1314	1324	1543	1568	1930
Boiler return	HR	R	1"	¾"	1"	1"	1"	1"	1"	1 ¼"	1 ¼"	1 ¼"	1 ¼"	1 ¼"
		(h5) mm	193	835	191	191	220	220	220	288	296	333	360	396
Sensor tube		Ø x L mm	16 x 200	11 x 450	16 x 200	16 x 200	16 x 200	16 x 200	16 x 200	16 x 200	16 x 200	16 x 250	16 x 250	16 x 250
		(h4) mm	428	800	461	506	548	683	695	1079	1087	1140	1175	1470
Flange		Ø	Rp 1 ¼"	DN 85	150	150	150	150	150	225	225	225	225	225
		(h7) mm	248	800	246	246	275	275	275	378	387	412	443	481

Storatherm Aqua Compact

- Horizontal indirect fired water heater
- Heavy duty S235JRG2 (RSt 37-2) steel
- Corrosion resistant glass-lined tank according to German DIN 4753
- High capacity, low pressure-drop glass lined heat exchanger
- Factory mounted thermometer
- Extra thick PU-foam insulation
- Robust frame to carry 240 kg
- Heating surface 0.9 m2
- Max. operating pressure: 10 bar (tank), 16 bar (coil)
- Max. operating temperature: 95°C (tank), 110°C (coil)

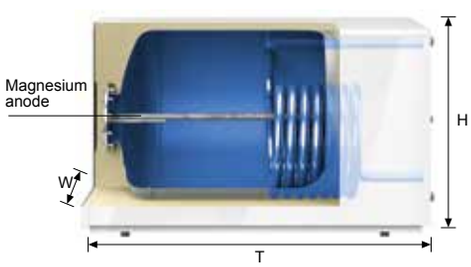

AC 150/1 - 250/1

Formerly US Type	Article No Blue	Orange	Silver	White	Material Group	W mm	H mm	T mm	Weight kg	Performance l/h	Heating Time min
AC 150/1	7762000	7762100	7765000	7761900	60	620	590	995	85.0	740	18
AC 250/1	7762500	7762600	7765100	7761300	60	653	644	1095	114.0	755	29

Performance with T = 10°C Cold Water, Hot Water T = 45°C, storage tank T = 60°C, heating ΔT 80 /60°C

Storatherm Aqua Solar

Double Coil Hot Water Heater

- Floor standing indirect fired/solar water heater
- Heavy duty S235JRG2 (RSt 37-2) quality steel
- Corrosion resistant glass-lined tank according to German DIN 4753
- Magnesium anode rod(s) for tank protection
- On 1500 - 3000 litres, maintenance free anode (230 V) is mounted
- High capacity, low pressure-drop glass-lined heat exchanger
- Factory mounted thermometer
- Extra thick (50 mm) PU-foam insulation, from 750 litres
- AB steel jacket in various colours,
- AF foil jacket in various colours
- Clean-out for inspection access
- Accessories; For additional heating:
  - Extra removable heat exchanger
  - RWT1 - Ø150 flange & RWT2 - Ø225 flange
  - Extra electrical heating element
  - EEHR & EFHR (see table page 112)
- Max. operating pressure: 10 bar (tank), 16 bar (coil)
- Max. operating temperature: 95°C (tank), 110°C (coil)

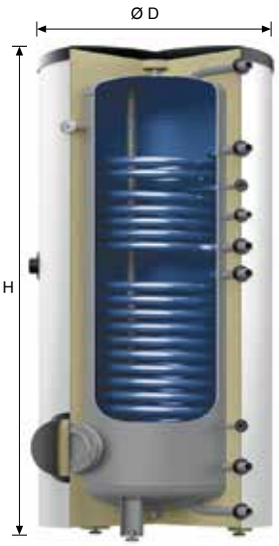

Formerly SB-SF/2	Type	Article No				Material Group	Ø D (mm)	Height (mm)	Weight kg	Inclination Height mm	Heating Surface top/buttom m2
		Blue	Orange	Silver	White						
	AF 200/2	-	-	-	7743400	61	540	1473	84	1530	0.7/0.95
	AF 300/2	7740100	7740000	7740800	7741500	61	600	1834	123	1892	0.8/1.55
	AF 300/2[1)]	-	-	-	7753300	61	700	1334	123	1472	0.85/1.45
	AF 400/2	7753500	7753600	7740900	7741300	61	700	1631	149	1738	1.05/1.80
	AF 500/2	7754000	7754100	7741000	7741400	61	700	1961	179	2044	1.30/1.90
	AF 750/2	-	-	-	7743200	61	910/750	2023/1932	249	1990	1.17/1.93
	AF 1000/2	-	-	-	7743300	61	1010/850	2050/1989	320	2025	1.12/2.45
	AF 1500/2	-	-	-	7800750	52	1200/1000	2216/2019	495	2250	1.9/3.8
	AF 2000/2	-	-	-	7800850	52	1400/1200	2126/2019	670	2200	2.37/4.74
	AF 3000/2	-	-	-	7800950	52	1400	2875	820	3300	3.4/6.8
	AB 300/2	7740500	7760600	7741600	7742200	61	600	1834	123	1892	0.8/1.55
	AB 400/2	7761200	7767100	7742300	7742400	61	700	1631	149	1738	1.05/1.80
	AB 500/2	7757000	7740700	7741700	7707500	61	700	1961	179	2044	1.30/1.90

[1)] Short model

Performance Table		200/2	300/2 short	300/2	400/2	500/2	750/2	1000/2	1500/2	2000/2	3000/2
Water volume - upper coil	litres	0.7	5.6	5.6	7.3	9.1	8.2	7.8	17.5	21.8	32.2
Water volume - lower coil	litres	0.95	10.8	10.8	12.6	13.3	13.5	17.1	35.0	43.6	62.2
Max pressure coil	bar	16	16	16	16	16	16	16	16	16	16
Max temperature coil	°C	110	110	110	110	110	110	110	110	110	110
Heating capacity - upper coil	kW	24	26	26	31	40	33	32	57	72	91
Continuous flow ΔT 35°C	l/h	550	630	630	740	970	815	780	1390	1760	2245
Performance ΔT 35°C	l/10min	371	490	486	616	769	1100	1418	2160	2865	4944
Performance ΔT 35°C	l/1st hour	871	1022	1019	1251	1588	1776	2073	3319	4331	6470
Heating time ΔT 50°C	min	29	40	40	45	44	80	109	92	97	81
Heating capacity - lower coil	kW	31	48	48	57	65	60	76	99	112	166
Continuous flow ΔT 35°C	l/h	760	1170	1170	1395	1590	1460	1870	2430	2449	4098
Performance ΔT 35°C	l/10min	399	580	576	722	871	1211	1598	2334	3030	4770
Performance ΔT 35°C	l/1st hour	1034	1810	1559	2193	2586	2890	3692	4358	5320	4265
Heating time ΔT 50°C	min	22	22	22	25	27	44	46	53	63	63

Calculation with T = 10°C Cold Water, Hot Water T = 45°C, storage tank T = 60°C, heating ΔT 80 /60°C

Specs of Insulation Jackets		200/2	300/2 short	300/2	400/2	500/2	750/2	1000/2	1500/2	2000/2	3000/2
Insulation thickness	mm	50	50	50	50	50	50	80	100	100	100
Fire classification/Insulation	DIN 4102-1	B3	B3	B3	B3	B3	B3	B3	B3	B3	B3
Fire classification/Jacket	DIN 4102-1	B2	B2	B2	B2	B2	B2	B2	B2	B2	B2
Fire classification/Cover	DIN 4102-1	B2	B2	B2	B2	B2	B2	B2	B2	B2	B2
Heat loss in 24 hours	Kwh/24h	2.3	2.4	2.6	2.9	3.2	3	4.8	5.16	5.73	5.73
Constance cooling	Wh/24h.L.1K	0.256	0.178	0.193	0.161	0.142	0.133	0.107	0.076	0.064	0.064
Conductivity therm insulation	W/mK	0.034	0.034	0.034	0.034	0.034	0.034	0.04	0.04	0.04	0.04

Storatherm Aqua Solar

Double Coil Hot Water Heater

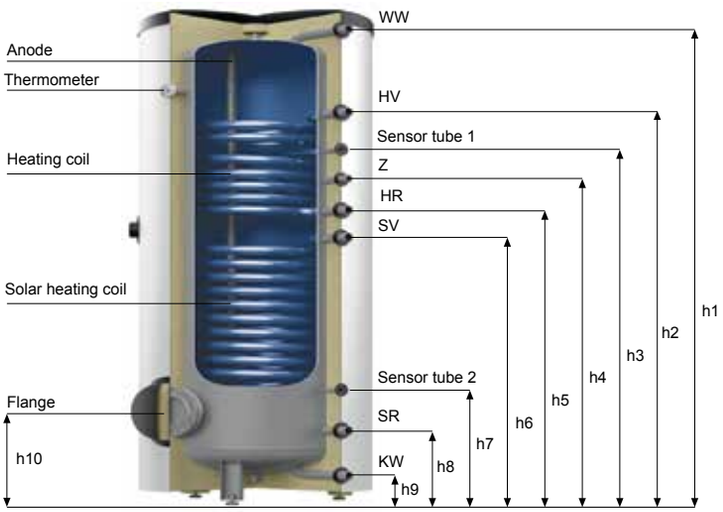

Magnesium anode

optimal protection against corrosion
maintenance free power anode available are mounted as standard on 1500 - 3000 litres

Heating coil
2 large capacity heating coils designed to prevent the formation off cold zones and thus the contamination with bacetria

Glass-lined tank

steel and glass are fused together to achieve the best of both materials - the strength and engineering flexibility of steel and the corrosion resistance of glass 1st class water with respect to hygiene and taste smooth glass-lined which prevents formation of lime deposits on surface

Inspection hole

from 150 litres facilitates cleaning and maintenance could be used to install an additional electrical heating element or auxiliary heat exchanger.

Type		AB/AF	200/2	300/2 short	300/2	400/2	500/2	750/2	1000/2	1500/2	2000/2	3000/2
Capacity		litres	191	298	295	380	470	750	995	1500	2000	2800
Diameter		mm	540	700	600	700	700	910	1010	1200	1400	1400
Diameter without cover		mm	Ø	Ø	Ø	Ø	Ø	750	850	1000	1200	1200
Height		mm	1473	1334	1834	1631	1961	2000	2025	2216	2025	2875
Height without cover		mm	Ø	Ø	Ø	Ø	Ø	1932	1959	1989	2019	2784
Inclination height		mm	1530	1472	1738	1738	2044	1990	2025	2225	2200	3300
Net weight		kg	70	106	106	130	160	231	291	495	670	820
Tank max pressure		bar	10	10	10	10	10	10	10	10	10	10
Tank max temperature		°C	95	95	95	95	95	95	95	95	95	95
Hot water outlet	WW	R	¾"	1"	1"	1"	1"	1 ¼"	1 ¼"	2"	2"	2"
		(h1) mm	1366	1226	1725	1523	1853	1887	1905	2048	1937	2691
Cold water inlet	KW	R	¾"	1"	1"	1"	1"	1 ¼"	1 ¼"	2"	2"	2"
		(h9) mm	55	55	90	55	55	99	103	105	118	156
Circulation	Z	R	¾"	¾"	¾"	¾"	¾"	¾"	¾"	1 ¼"	1 ¼"	1 ¼"
		(h4) mm	899	625	1179	1111	1264	1242	1243	1660	1695	2406
Boiler supply	HV	R	1"	1"	1"	1"	1"	1"	1"	1 ¼"	1 ¼"	1 ¼"
		(h2) mm	1146	1048	1424	1354	1604	1467	1423	1660	1613	2235
Boiler return	HR	R	1"	1"	1"	1"	1"	1"	1"	1 ¼"	1 ¼"	1 ¼"
		(h5) mm	786	790	1064	1006	1114		1153	1153	1224	1645
Solar supply	SV	R	1"	1"	1"	1"	1"	1151	1"	1 ¼"	1 ¼"	1 ¼"
		(h6) mm	686	715	964	909	965	1"	884	884	1080	1466
Solar return	SR	R	1"	1"	1"	1"	1"	830	1"	1 ¼"	1 ¼"	1 ¼"
		(h8) mm	191	220	254	220	220	1"	297	333	360	396
Sensor tube 1		Ø x L mm	16 x 200	16 x 200	16 x 200	16 x 200	16 x 200	288	16 x 200	16 x 250	16 x 250	16 x250
		(h3) mm	1011	920	1289	1223	1409	16 x 200	1333	1140	1350	1780
Sensor tube 2		Ø x L mm	16 x 200	16 x 200	16 x 200	16 x 200	16 x 200	1332	16 x 200	16 x 250	16 x 250	16 x 250
		(h7) mm	280	306	403	369	280	16 x 200	411	411	510	522
Flange		Ø	150	150	150	150	150	402	225	225	225	225
		(h10) mm	246	275	324	275	275	225	287	412	443	481

Additional heating input by adding EEHR/ EFHR electrical heating element and/or removable heat exchanger. Assembly on site
(page 112-113)

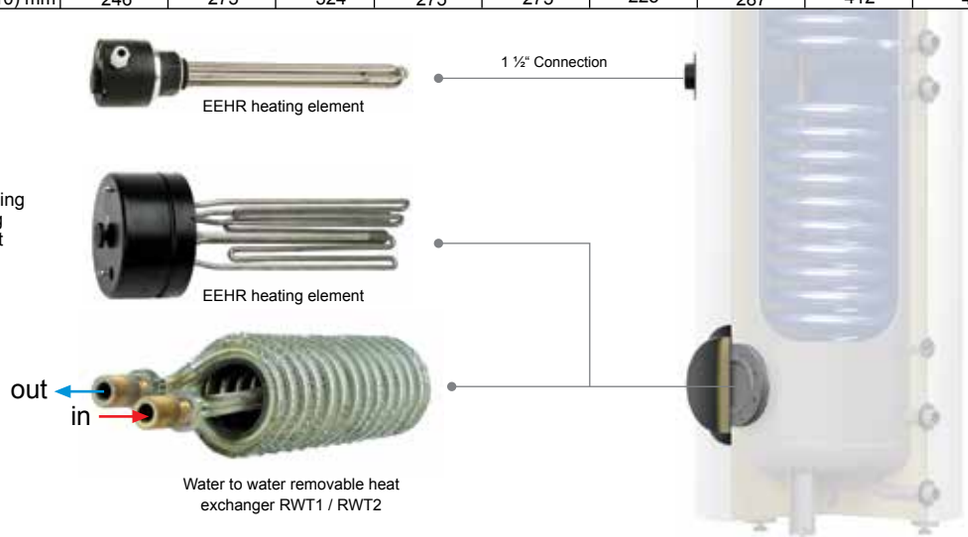

Storatherm Aqua Heat Pump

Hot Water Heater For Heat Pumps (Single Coil & Double Coil)

- Floor standing indirect fired water heater destined for heat pump applications
- Heavy duty S235JRG2 (RSt 37-2) steel
- Corrosion resistant glass-lined tank according to German DIN 4753
- Extra large heating surface ensuring best energy transfer performance for heat pumps
  AH.../1 Single coil
  AH.../2 Double coil
- Magnesium anode rod for tank protection
- Factory mounted thermometer
- Extra thick PU-foam CFC free insulation with foil jacket in white colour (delivered seperately, assembly on site)
- 1 ½" Socket for addition of EEHR electrical heating element (page 112)
- Clean out for inspection access as well as possibility to add an additional heating source
- Max. operating pressure: 10 bar (tank), 10 bar (coil)
- Max. operating temperature: 95°C (tank), 110°C (coil)



AH ..../1

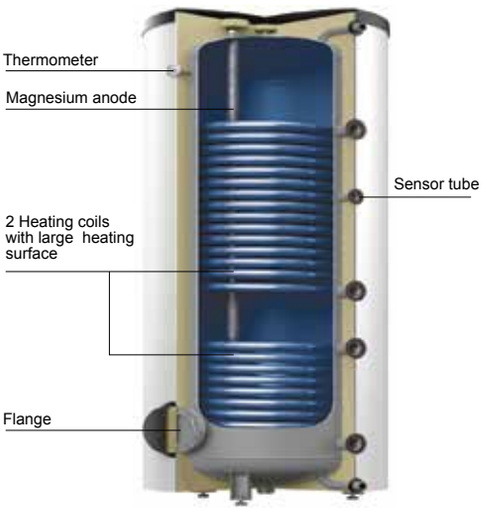

AH ..../2

Storage Tank Type	Article No	Material Group	Ø D (mm)	Height (mm)	Weight kg	Inclination Height mm	Heating Surface top/buttom m2
AH 300/1	7772310	60	700	1294	139	1393	3.2
AH 400/1	7772410	60	700	1591	170	1672	5.0
AH 500/1	7772510	60	700	1921	222	1990	6.2
AH 750/1	7782200	60	990	2050	263	1972 (2173)	7.0
AH 1000/1	7782900	60	1090	2083	335	2010 (2226)	9.2
AH 300/2	7772320	60	700	1294	145	1393	2.4/1.1
AH 400/2	7772420	60	700	1591	189	1672	3.2/1.4
AH 500/2	7772520	60	700	1921	235	1990	4.3/1.6
AH 750/2	7782220	60	990	2050	290	1972 (2173)	5.2/2.2
AH 1000/2	7782920	60	1090	2083	385	2010 (2226)	6.1/3.1

Formerly, WPS

Insulation colour is white

Performance Table		300/1	300/2	400/1	400/2	500/1	500/2	750/1	750/2	1000/1	1000/2
Water volume - upper coil	litres	-	20.4	-	27.2	-	36.3	-	39.6	-	42.7
Water volume - lower coil	litres	24	9.1	35	11.3	45	13.6	49	15.6	64	21.5
Max pressure coil	bar	16	16	16	16	16	16	16	16	16	16
Max temperature coil	°C	110	110	110	110	110	110	110	110	110	110
Heating capacity - upper coil	kW	-	46	-	64	-	88	-	110	-	132
Continuous flow ΔT 35°C	l/h	-	1319	-	1835	-	2323	-	3153	-	3784
Performance ΔT 35°C	l/10min	-	671	-	907	-	1172	-	1653	-	2134
Performance ΔT 35°C	l/1st hour	-	1705	-	2349	-	3166	-	4119	-	5071
Heating time ΔT 35°C	min	-	16	-	15	-	14	-	17	-	19
Heating capacity - lower coil	kW	68	33	106	40	131	46	152	60	203	82
Continuous flow ΔT 35°C	l/h	1949	946	3039	1147	3755	1319	4557	1720	5819	2351
Performance ΔT 35°C	l/10min	776	609	1108	792	1377	971	1853	1414	2473	1895
Performance ΔT 35°C	l/1st hour	2335	1332	3553	1661	4399	1962	5323	2685	7106	3638
Heating time ΔT 35°C	min	11	22	9	25	9	27	12	31	12	30

Calculation with T = 10°C Cold Water, Hot Water T = 45°C, storage tank T = 60°C, heating ΔT 80 /60°C

Thermal Insulation For Hot Water Heat Pumps

- Thermal insulation for Storatherm Aqua Heat Pump in sizes 750 l and 1000 l, ordered separately

Type	Article No	Material Group
AHW 750/1	9119696	68
AHW 750/2	9119697	68
AHW 1000/1	9119698	68
AHW 1000/2	9119699	68

Storatherm Aqua Heat Pump

Combination Tank - in - Tank Hot Water Heater

- Combined storage tank for heating sanitary hot water and back-up for heating systems
- Hot water production in an glass-lined internal tank
- Accordance with German DIN 4753 T3
- With magnesium anode and adjustable feet
- Clamping rails for variable sensor positioning
- Order insulation separately
- Max. operating pressure:
  Heating water 3 bar
  Potable water 10 bar,
  Solar heat exchanger 16 bar
- Max. operating temperature:
  Heating water 95°C
  Potable water 95°C
  Solar heat exchanger 110°C
- Fire classification of jacket-B2

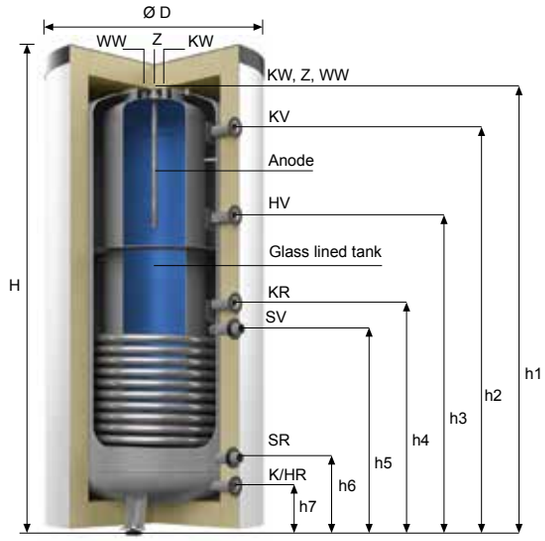

Formerly VKS	Storage Tank Type	Article No	Material Group	Ø D (mm)	Height (mm)	Weight kg	Inclination Height mm	Heating Surface top/buttom m2
	AC 600/200	7774600	60	900/ 700	1880/1808	178	1830	2.1
	AC 750/200	7774750	60	990/ 790	1910/1844	200	1868	2.6
	AC 900/200	7774900	60	990/ 790	2080/2006	214	2028	3.0

Insulation colour is white

Type		AC	600/200	750/200	900/200
Capacity		litres	402	580	655
Diameter		mm	900	990	990
Diameter without cover		mm	700	790	790
Height		mm	1880	1910	2080
Height without cover		mm	1808	1844	2006
Inclination height		mm	1830	1868	2028
Net weight		kg	178	200	214
Hot water outlet	WW	R	3/4”	3/4”	3/4”
		(h1) mm	1808	1844	2006
Cold water inlet	KW	R	3/4”	3/4”	3/4”
		(h1) mm	1808	1844	2006
Circulation	Z	R	3/4”	3/4”	3/4”
		(h1) mm	1808	1844	2006
Boiler supply	KV	R	1”	1”	1”
		(h2) mm	1586	1599	1761
Heating supply	HV	R	1”	1”	1”
		(h3) mm	1239	1244	1334
Boiler return	KR	R	1”	1”	1”
		(h4) mm	893	906	996
Heating return	K/HR	R	1”	1”	1”
		(h7) mm	170	184	184
Solar supply	SV	R	1”	1”	1”
		(h5) mm	1173	832	922
Solar return	SR	R	1”	1”	1”
		(h6) mm	278	292	292

Storatherm Aqua Combi Thermal Insulation

- For thermal insulation of Storatherm Aqua Combi …/200 combined storage tank made out of CFC-free PU flexible foam (100 mm)
- ACW thermal insulation for use with heating water only

Formerly VKW	Type	Article No	Material Group
	ACW 600/200	9118391	68
	ACW 750/200	9118392	68
	ACW 900/200	9118393	68

Storatherm Aqua Load

Hot Water Storage Tank

- Storage tank for hot water heating purposes
- Heavy duty S235JRG2 (RSt 37-2) quality steel
- Corrosion resistant glass-lined tank according to German DIN 4753
- Magnesium anode rod(s) for tank protection
- Factory mounted thermometer
- Extra thick (50 mm) PU foam CFC free insulation for 300/500 litres, > 750 litres removable soft PU foam CFC free 900 mm jacket will be delivered separately to be mounted on site
- Several possibilities to add electrical heating elements from 3 kW up to 100 kW (3000 lt). Consult kW table (page 112)
- Clean-out and inspection access opening
- Max. operating pressure: 10 bar
- Max. operating temperature: 95°C



R - One Flange
AL 300 - 500/R

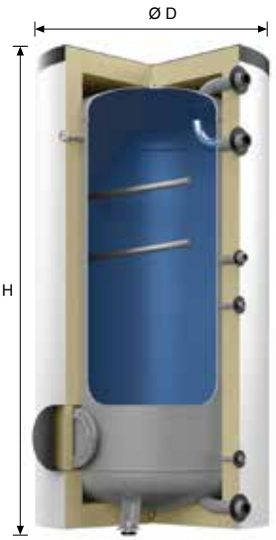

R - One Flange
AL 750 - 1000/R

Formerly LS

Type	Article No	Material Group	Ø D With insulation mm	Ø D Without insulation mm	Height With insulation mm	Height Without insulation mm	Weight kg	Inclination Height mm
AL 300/R	6500500	51	600	-	1834	-	90	1892
AL 500/R	6500600	51	700	-	1961	-	155	2044
AL 750/R	6500000	51	910	750	2010	1932	214	1990
AL 1000/R	6500100	51	1010	850	2035	1959	267	2025
AL 1500/R2	6500300	51	1200	1000	2215	2122	390	2220
AL 2000/R2	6500400	51	1400	1200	2126	2033	550	2235
AL 3000/R2	6501200	51	1400	1200	2876	2800	630	2848
AL 1500/R3	6500303	51	1200	1000	2215	2122	395	2220
AL 2000/R3	6500403	51	1400	1200	2126	2033	555	2235
AL 3000/R3	6501203	51	1400	1200	2876	2800	635	2848
AL 3000/R4	6501204	51	1400	1200	2876	2800	642	2848

Specs of Insulation Jackets		300	500	750	1000	1500	2000	3000
Insulation thickness	mm	50	50	80	80	100	100	100
Fire classification/Insulation	DIN 4102-1	B3	B3	B3	B3	B3	B3	B3
Fire classification/Jacket	DIN 4102-1	B2	B2	B2	B2	B2	B2	B2
Fire classification/Cover	DIN 4102-1	B2	B2	B2	B2	B2	B2	B2
Heat loss in 24 hours	Kwh/24h	2.4	3	3.7	4.8	5.70	6.72	7.66
Constance cooling	Wh/24h.L.1K	0.178	0.133	0.11	0.107	0.076	0.064	0.064
Conductivity therm insulation	W/mK	0.034	0.034	0.034	0.034	0.039	0.039	0.039

Heat loss in 24 hours at temperature (tank): 65°C - Temperature (room): 20°C

Foil outer jacket: White colour with thickness of 0,4 mm and has a fire class B2 according to DIN 4102
Top cover: Black colour with fire class B2 according to DIN 4102 and density of 1050 kg/m2
Zip: Black colour with width of 8 mm



Additional heating input by adding EEHR 3 kW electrical heating element. Assembly on site
(page 112-113)



Storatherm Aqua Load

Hot Water Storage Tank



R2 - Two Flanges
AL 1500 - 3000/R2

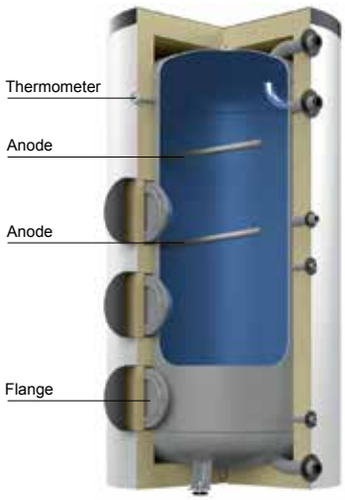

R3 - Three Flanges
AL 1500 - 3000/R3

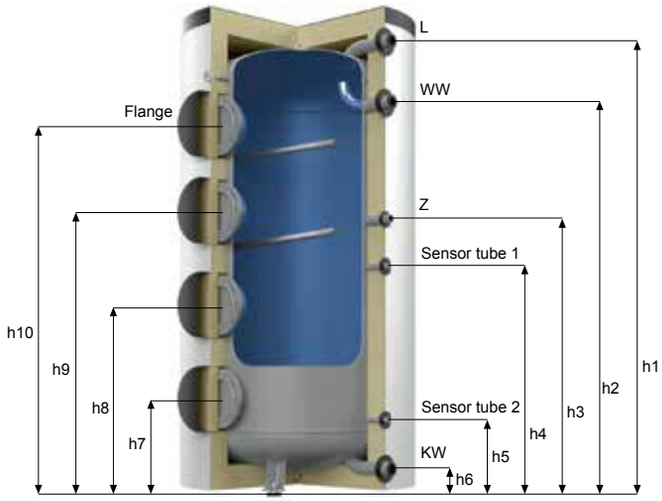

R4 - Four Flanges
AL 3000/R4

Type		AL	300	500	750	1000	1500	2000	3000
Capacity		litres	300	500	750	1000	1500	2000	3000
Diameter		mm	600	700	910	1010	1200	1400	1400
Diameter without cover		mm	Ø	Ø	750	850	1000	1200	1200
Height		mm	1834	1961	2010	2035	2215	2126	2876
Height without cover		mm	Ø	Ø	1932	1959	2122	2033	2800
Inclination height		mm	1892	2044	1990	2025	2220	2235	2848
Net weight		kg	87	96	195	248	366	522	630
Battery charging	L	R	1 ½"	1 ½"	2"	2"	2"	2"	2"
		(h1) mm	1546	1672	1908	1911	2049	1933	2691
Hot water outlet	WW	R	1 ½"	1 ½"	2"	2"	2"	2"	2"
		(h2) mm	1546	1672	1638	1646	1782	1648	2406
Cold water inlet	KW	R	1 ½"	1 ½"	2"	2"	2"	2"	2"
		(h6) mm	272	238	88	92	105	118	235
Circulation	Z	R	¾"	3/4"	1 ¼"	1 ¼"	1 ¼"	1 ¼"	1 ¼"
		(h3) mm	1180	1265	1143	1154	1357	1388	1966
Sensor tube		Rp	½"	½"	½"	½"	½"	½"	½"
		(h4) mm	1180	1265	943	951	1077	1108	1546
		(h5) mm	272	238	288	296	322	353	391
Flange		R	150	150	225	225	225	225	225
		(h7) mm	325	275	378	387	412	412	412
		(h8) mm	-	-	-	-	812	812	812
		(h9) mm	-	-	-	-	1212	1212	1212
		(h10) mm	-	-	-	-	-	-	1612

Additional heating input by adding EEHR/ EFHR electrical heating element and/or removable heat exchanger. Assembly on site
(page 112-113)



EFHR heating element



Water to water removable heat exchanger RWT

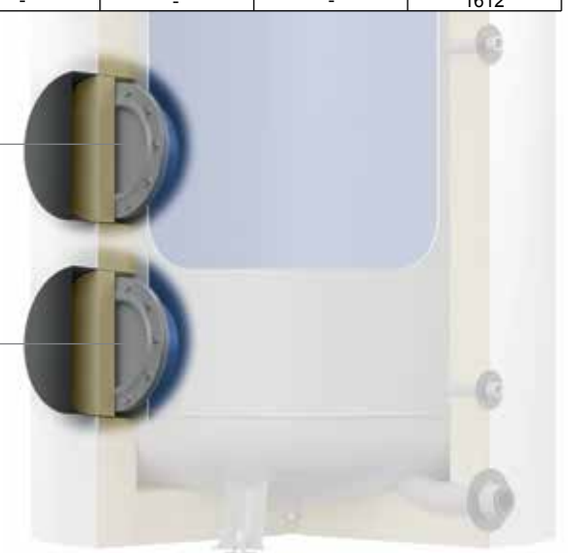

Accessories

Reflex EEHR Electric Screw - in Heating Element 1 ½”

- As supplementary electrical heating
- Assembly in 1 ½” sleeve
- Suitable for Storatherm Aqua models with 1 ½” socket or through flange adapter
- Safety temperature limiter (STL) 120°C
- Indicator light as operating display
- Degree of protection IP 54
- On-site electrical connection
- Not approved for continuous operation
- Water hardness max. 12 °dH





CE

Type	Article No	Material Group	Tank Size litres	Output kW	Voltage V	L (mm)
EEHR 3.0	7755100	68	> 100	3.00	230/1PH	375
EEHR 4.5	7755300	68	> 300	4.50	400/3PH	450
EEHR 6.0[1)]	7755400	68	> 300	6.00	400/3PH	510
EEHR 8.0	7755550	68	> 750	8.00	400/3PH	620
EEHR 10.0	7755600	68	> 1000	10.00	400/3PH	750

1) Not for AB - AF 300/2, Ø 600 mm

Reflex Flange Adaptor For EEHR Electric Screw-in Heating Element

- For optional assembly of a 1 ½” EEHR screw-in heater
- Flange with holes replaces standard blind flange on tank inspection opening
- Order seal separately

Flange

Article No	Material Group	Tank Size litres	Pitch Circle LK mm
7760000	68	150-500	150
7760100	68	750-3000	225

Seal

Article No	Material Group	Tank Size litres	Pitch Circle LK mm
7760900	68	150-500	150
7761000	68	750-3000	225

Reflex EFHR Electrical Flange - Type Heating Elements

- As supplementary electrical heating
- Approved for continuous operation
- Suitable for types:
  Storatherm Aqua Heat Pump
  Storatherm Aqua Solar
  Storatherm Aqua
  Storatherm Aqua Load
- Trouble-free integration via the inspection opening of the storage tank
- Up to 10.0 kW LK 150 mm, from 16.0 kW LK 225 mm
- 3 power levels, switchable
- With temperature control up to 95°C
- Safety temperature limiter 120°C
- On-site electrical connection
- Incl. flange and seal



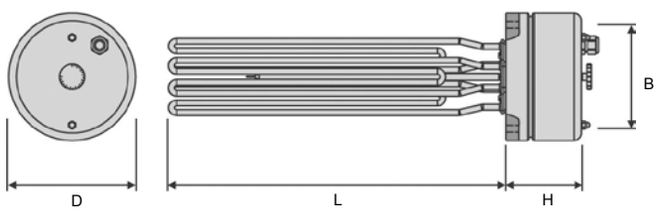

CE

Type	Article No	Material Group	Tank Size litres	Output kW	Voltage V	L (mm)	B (mm)	H (mm)	D (mm)
EFHR 4.0	9116314	68	150 - 500	4.0/2.7/2.0	400/3PH	295	150	110	185
EFHR 6.0	9116315	68	300 - 500	6.0/4.0/3.0	400/3PH	395	150	110	185
EFHR 8.0[1)]	9116316	68	300 - 500	8.0/5.5/4.0	400/3PH	495	150	110	185
EFHR 10.0[1)]	9116317	68	300 - 500	10.0/6.7/5.0	400/3PH	495	150	110	185
EFHR 16.0[2)]	9116501	68	750 - 3000	16.0 / 11.0 / 8.0	400/3PH	610	225	140	280
EFHR 19.0[2)]	9116502	68	1000 - 3000	19.0 / 12.7 / 9.0	400/3PH	740	225	140	280
EFHR 25.0[2)]	9115569	68	1000 - 3000	25.0 / 18.8 / 12.5	400/3PH	740	225	140	280

1) Not for AB - AF 300/2, Ø 600 mm; AH 300, AH 500
2) Not for AH 750, AH 1000

Reflex RWT Ribbed - Tube Heat Exchanger

- For integration with an additional heat generator, e.g. a solar energy system
- Suitable for flange size LK 150 & LK 225
- RWT 1 (LK 150): AB/AF 150 - 500 single & double coil
  AH/AL 300 - 500
- RWT 2 (LK 225): AB/AF/AL 750 - 3000
  AH 750 - 1000
- Incl. counterflange and seal
- Made of ribbed copper pipe
- Max. operating pressure 10 bar
- Max. operating temperature 90°C

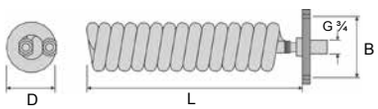



Type	Article No	Material Group	Power kW	Surface m²	L (mm)	B (mm)	D (mm)
RWT 1	7755900	68	9-11	1.1	420	150	110
RWT 2	7756300	68	31-39	2.3	540	225	170

Temperature Controller

- For activation/deactivation of water heater pump (in the abscence of built-in temperature regulator in boiler)
- Temperature range 30 - 80°C
- Differential gap 6K
- Switching capacity 16 (5) A/ 230 V
- Protection type IP 40
  to be fitted in the water heater sensor tube
- With a clip-spring



Temperature controller

Type	Article No	Material Group
Temperature controller	7751100	68

Inlet Security Group

- Comprising a pressure relief valve (8 bar), check valve and gate valve
- Optimal protection for pressurised water heaters according to German standarts DVGW
- Flow rate: 4.0 m³/h at ΔP = 1.0 bar
- Connection: DN 20

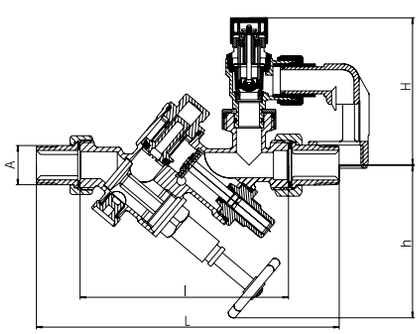





Type	Article No	Material Group	A (mm)	L (mm)	l (mm)	H (mm)	h (mm)
Inlet security group	9119668	68	G ¾	230	140	100	115

Protection Anodes

- For cathodic protection against corrosion
- All Storatherm Aqua potable water storage tanks have factory-fitted magnesium rod anodes
- From type AF 750/1, AF 750/2, AL 1500/R2, AH 750/1 and AH 750/2 with double anode
- Chain anode for retrofitting in case of low ceiling heights



Magnesium Anode Rod



Chain Magnesium Anode

Type	Article No	Material Group	Storage Tank Type
Magnesium Anode Rod	7751580	68	AF/AB 100/1
Magnesium Anode Rod	7757400	68	AC 120/1
Magnesium Anode Rod	7751400	68	AC 150/1; AF/AB 150/1
Magnesium Anode Rod	7751500	68	AF/AB 200/1, AF/AB 200/2, AC …/200
Magnesium Anode Rod	7751510	68	AL 300/R; AF/AB 300/1, AF/AB 300/2 Ø 700
Magnesium Anode Rod	7751520	68	AL 300/R - AL 500/R; AF/AB 400/1, AF/ AB 300/1 Ø 600; AF/AB 400/2
Magnesium Anode Rod	7751530	68	AL 500/R; AF/AB 500/1, AF/AB 500/2
Magnesium Anode Rod	7751540	68	AF 750/1 (2 pcs. required)
Magnesium Anode Rod	7751610	68	AH 300/1; AH 300/2; AF 1000/1 (2 pcs. required)
Magnesium Anode Rod	7751570	68	AH 400/1; AH 400/2; AF 750/2; AH 750/1; AH 750/2
Magnesium Anode Rod	7751590	68	AH 500/1; AH 500/2, AF 1000/2; AH 1000/1; AH 1000/2
Magnesium Anode Rod	7751560	68	AC 250/1
Magnesium Anode Rod	7751620	68	AL 750/R; AH 750/1; AH 750/2; AH 1000/1; AH 1000/2
Magnesium Anode Rod	7751630	68	AL 1000/R2
Magnesium Anode Rod	7751540	68	AL 1500/R2 - AL 3000/R2; AL 1500/R2 - AL 3000/R2 (2 pcs. required)
Chain Magnesium Anode	7751600	68	Not for AC 120/1; AC 150/1; AC 250/1; AF 750/ 1 - AF 3000/1; AL 750/R - AL 3000/ R2: AH 750/1; AH 1000/1; AH 750/2; AH 1000/2

Active Anode

- Maintenance-free long-term protection in accordance with DIN 4753 T3 and T6
- Voltage-controlled power supply 230 V; 50/60 Hz
- Non-wearing titanium electrodes
- Protection category II
- Reducer G 1 - G ¾ on site



Active Anode

Type	Article No	Material Group	Storage Tank Type
Active anodes	7751300	68	Not for AC 120/1 Reducer G1-G ¾ on site
Active anodes	9119365	68	Not for AF 1500-2000

Control Thermostat For Electrial Heating Element

Type	Article No	Material Group	Suitable For
Control thermostat	9200445	68	EEHR
Control thermostat	9200447	68	EEFR



Control Thermostat

Heat Exchangers

- Suitable for all heating, chilled water, solar and renewable energy systems



Longtherm

Longtherm With Threaded Connections

- Suitable for district heating, solar heating, floor heating and service water systems
- Heat exchanger made of stainless steel panels soldered with copper filler metal without counterflanges, screws or seals
- Approval in acc. with the Pressure Equipment Directive 97/23/EC
- Plate material: Stainless steel AISI 316
- Brazing material: Copper
- Max. operating temperature 195°C
- Max. excess operating pressure 30 bar
- Robust plate design for high heat exchanger strength
- High performance for maximum heat transfer



rhc 15



rhc 40



rhc 60

CE

	Duct Shape and Model	Number of Plates	Article No rlc	Article No rlc	Material Group	L mm	W/w mm	H/h mm	Weight kg	Connection	Contents (L) s1/s2	Contents (L) s3/s4
rhc 15	rhc 15	10	6712100	-	76	51	74/40	204/170	1.4	G ¾	0.10	0.13
rhc 15	rhc 15	20	6712200	-	76	74	74/40	204/170	1.9		0.23	0.25
rhc 15	rhc 15	30	6712300	-	76	97	74/40	204/170	2.4		0.35	0.38
rhc 40	rhc 40	10	6713100	-	76	53	124/73	335/281	3.2	G 1	0.26	0.33
rhc 40	rhc 40	20	6713200	-	76	76	124/73	335/281	4.5		0.59	0.65
rhc 40	rhc 40	30	6713300	-	76	99	124/73	335/281	5.8		0.91	0.98
rhc 40	rhc 40	40	6713400	-	76	122	124/73	335/281	7.1		1.24	1.30
rhc 40	rhc 40	50	6713500	-	76	145	124/73	335/281	8.4		1.56	1.63
rhc 40	rhc 40	60	6713600	-	76	168	124/73	335/281	9.7		1.89	1.95
rhc 60	rhc 60	6	6714100	-	76	44	124/73	532/478	3.7	G 1 ¼	0.20	0.30
rhc 60	rhc 60	8	6714200	-	76	49	124/73	532/478	3.9		0.30	0.40
rhc 60	rhc 60	10	6714300	-	76	53	124/73	532/478	4.4		0.40	0.50
rhc 60	rhc 60	14	6714400	-	76	63	124/73	532/478	5.2		0.60	0.70
rhc 60	rhc 60	20	6714500	-	76	76	124/73	532/478	6.5		0.90	1.00
rhc 60	rhc 60	24	6714600	-	76	86	124/73	532/478	7.3		1.10	1.20
rhc 60	rhc 60	30	6714700	-	76	99	124/73	532/478	8.6		1.40	1.50
rhc 60	rhc 60	40	6714800	-	76	122	124/73	532/478	10.7		1.90	2.00
rhc 60	rhc 60	50	6714900	-	76	145	124/73	532/478	12.8		2.40	2.50
rhc 60	rhc 60	60	6715000	-	76	168	124/73	532/478	14.9		2.90	3.00
rhc 60	rhc 60	80	6715100	-	76	214	124/73	532/478	19.1		3.90	4.00
rhc 60	rhc 60	100	6715200	-	76	260	124/73	532/478	23.3		4.90	5.00

Longtherm With Threaded Connections



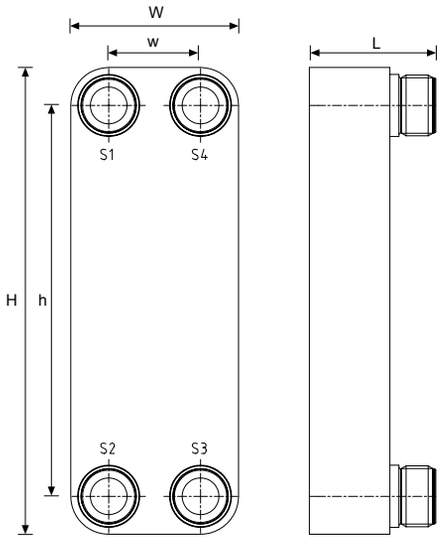

rhc 85 - rhc 150 - rhc 200

	Duct Shape and Model	Number of Plates	Article No rlc	Article No rlc	Material Group	L mm	W/w mm	H/h mm	Weight kg	Connection	Contents (L) s1/s2	Contents (L) s3/s4
r...c 85	r...c 85	30 G 2	6719100	6718100	76	145	271/200	532/460	27.6	G 2	3.22	3.45
	r...c 85	40 G 2	6719200	6718200	76	168	271/200	532/460	33.0		4.37	4.60
	r...c 85	50 G 2	6719300	6718300	76	191	271/200	532/460	38.4		5.52	5.75
	r...c 85	60 G 2	6719400	6718400	76	214	271/200	532/460	43.8		6.67	6.90
	r...c 85	80 G 2	6719500	6718500	76	260	271/200	532/460	54.6		8.97	9.20
	r...c 85	100 G 2	6719600	6718600	76	306	271/200	532/460	65.4		11.27	11.50
	r...c 85	120 G 2	6719700	6718700	76	352	271/200	532/460	76.2		13.57	13.80
rhc 1 0	rhc 150	50 G 2 1/2	6721100	-	76	197	271/161	532/421	39.4	G 2 ½	5.30	5.53
	rhc 150	60 G 2 1/2	6721200	-	76	221	271/161	532/421	44.8		6.41	6.63
	rhc 150	80 G 2 1/2	6721300	-	76	269	271/161	532/421	55.6		8.62	8.84
	rhc 150	100 G 2 1/2	6721400	-	76	317	271/161	532/421	66.4		10.83	11.05
	rhc 150	120 G 2 1/2	6721500	-	76	365	271/161	532/421	77.2		13.04	13.26
	rhc 150	150 G 2 1/2	6721600	-	76	437	271/161	532/421	93.4		16.35	16.58
	rhc 150	180 G 2 1/2	6721800	-	76	509	271/161	532/421	109.6		19.67	19.89
	rhc 150	200 G 2 1/2	6721700	-	76	557	271/161	532/421	120.4		21.88	22.10
rhc 200	rhc 200	50 G 2 1/2	6723100	-	76	197	271/161	802/690	53.9	G 2 ½	9.58	9.98
	rhc 200	60 G 2 1/2	6723200	-	76	221	271/161	802/690	61.9		11.57	11.97
	rhc 200	80 G 2 1/2	6723300	-	76	269	271/161	802/690	77.9		15.56	15.96
	rhc 200	100 G 2 1/2	6723400	-	76	317	271/161	802/690	93.9		19.55	19.95
	rhc 200	120 G 2 1/2	6723500	-	76	365	271/161	802/690	109.9		23.54	23.94
	rhc 200	150 G 2 1/2	6723600	-	76	437	271/161	802/690	133.9		29.53	29.93
	rhc 200	180 G 2 1/2	6723800	-	76	509	271/161	802/690	157.9		35.51	35.91
	rhc 200	200 G 2 1/2	6723700	-	76	557	271/161	802/690	173.9		39.50	39.90

Longtherm

Longtherm With Flanged Connections

- Suitable for district heating, solar heating, floor heating and service water systems
- Heat exchanger made of stainless steel panels soldered with copper filler metal flange connections, from rhc 150 special flange
- Approval in acc. with the Pressure Equipment Directive 97/23/EC
- Plate material: Stainless steel AISI 316
- Brazing material: Copper
- Max. operating temperature 195°C
- Max. excess operating pressure 30 bar
- Robust plate design for high heat exchanger strength
- High performance for maximum heat transfer



rhc 150*

CE

	Duct Shape and Model	Number of Plates	Article No rlc	Article No rlc	Material Group	L [1] mm	W/w mm	H/h mm	Weight kg	Connection	Contents (L) s1/s2	Contents (L) s3/s4
r..c 85	r..c 85	30	6717100	6716100	76	180	271/200	532/460	38.0	Flange DN 50/ PN 40	3.22	3.45
	r..c 85	40	6717200	6716200	76	203	271/200	532/460	43.4		4.37	4.60
	r..c 85	50	6717300	6716300	76	226	271/200	532/460	48.8		5.52	5.75
	r..c 85	60	6717400	6716400	76	249	271/200	532/460	54.2		6.67	6.90
	r..c 85	80	6717500	6716500	76	295	271/200	532/460	65.0		8.97	9.20
	r..c 85	100	6717600	6716600	76	341	271/200	532/460	75.8		11.27	11.50
	r..c 85	120	6717700	6716700	76	387	271/200	532/460	86.6		13.57	13.80
rhc 150	rhc 150	50	6720100	-	76	194	271/161	532/421	45.8	Flange DN 65/ PN 40	5.30	5.53
	rhc 150	60	6720200	-	76	218	271/161	532/421	51.2		6.41	6.63
	rhc 150	80	6720300	-	76	266	271/161	532/421	62.0		8.62	8.84
	rhc 150	100	6720400	-	76	314	271/161	532/421	72.8		10.83	11.05
	rhc 150	120	6720500	-	76	362	271/161	532/421	83.6		13.04	13.26
	rhc 150	150	6720600	-	76	434	271/161	532/421	99.8		16.35	16.58
	rhc 150	180	6720800	-	76	506	271/161	532/421	116.0		19.67	19.89
	rhc 150	200	6720700	-	76	554	271/161	532/421	126.8		21.88	22.10

[1] Length of rhc 150, rhc 200, rhc 300 without counterflange

*Foot construction and transport straps are not included in the standard delivery

When ordering, we recommend ordering 2 sets (equal to 4 units) of counterflanges per heat exchanger.

Starting at size rhc 150, it is a requirement to order 2 sets (equal to 4 units) of counterflanges per heat exchanger

Longtherm With Flanged Connections



rhc 200*



rhc 300

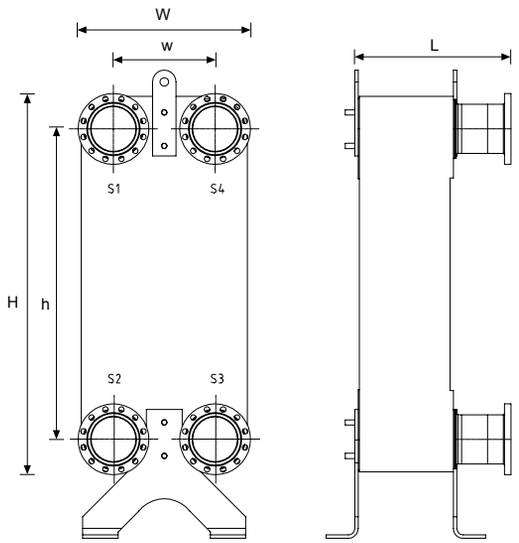

	Duct Shape and Model	Number of Plates	Article No rlc	Article No rlc	Material Group	L mm	W/w mm	H/h mm	Weight kg	Connection	Contents (L) s1/s2	Contents (L) s3/s4
rhc 200	rhc 200	50	6722100	-	76	194	271/161	802/690	60.3	Flange DN 65/ PN 40	9.58	9.98
	rhc 200	60	6722200	-	76	218	271/161	802/690	68.3		11.57	11.97
	rhc 200	80	6722300	-	76	266	271/161	802/690	84.3		15.56	15.96
	rhc 200	100	6722400	-	76	314	271/161	802/690	100.3		19.55	19.95
	rhc 200	120	6722500	-	76	362	271/161	802/690	116.3		23.54	23.94
	rhc 200	150	6722600	-	76	434	271/161	802/690	140.3		29.53	29.93
	rhc 200	180	6722800	-	76	506	271/161	802/690	164.3		35.51	35.91
	rhc 200	200	6722700	-	76	554	271/161	802/690	180.3	Flange DN 100/ PN 40	39.50	39.90
rhc 300	rhc 300	50	6724100	-	76	284	386/237	875/723	114.5		14.40	15.00
	rhc 300	60	6724200	-	76	308	386/237	875/723	127.0		17.40	18.00
	rhc 300	80	6724300	-	76	356	386/237	875/723	152.0		23.40	24.00
	rhc 300	100	6724400	-	76	404	386/237	875/723	177.0		29.40	30.00
	rhc 300	120	6724500	-	76	452	386/237	875/723	202.0		35.40	36.00
	rhc 300	150	6724600	-	76	524	386/237	875/723	239.5		44.40	45.00
	rhc 300	180	6724900	-	76	596	386/237	875/723	277.0		53.40	54.00
	rhc 300	200	6724700	-	76	644	386/237	875/723	302.0		59.40	60.00

*Foot construction and transport straps are not included in the standard delivery

Starting at size rhc 150, it is a requirement to order 2 sets (equal to 4 units) of counterflanges per heat exchanger

Accessories

Longtherm Connections Options

- Flat-sealed threaded connections, including seal, system connection as external thread, soldered end or welded end
- Starting at size rhc 150, the heat exchangers are equipped with special flanges
- Set, consisting of 2 units, only delivered as a set

With external thread - brass

Screw Connection for type	Article No	Material Group	G1	G2	L mm
rhc 15	6762100	77	¾	½	36
rhc 40	6762200	77	1	¾	41
rhc 60	6762300	77	1 ¼	1	51
r...c 85	6762400	77	2	1 ½	60
rhc 150	6762500	77	2 ½	2	66
rhc 200	6762500	77	2 ½	2	66

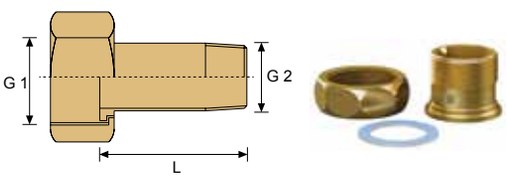

With welded end - steel

Screw Connection for type	Article No	Material Group	G1	Ø mm	L mm
rhc 15	6760100	77	¾	21.2	30
rhc 40	6760200	77	1	26.9	30
rhc 60	6760300	77	1 ¼	33.7	40
r...c 85	6760400	77	2	48.3	40
rhc 150	6760500	77	2 ½	60.3	50
rhc 200	6760500	77	2 ½	60.3	50

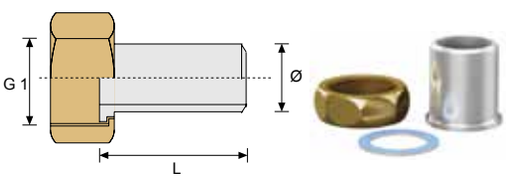

With soldered end - brass

Screw Connection for type	Article No	Material Group	G1	Ø mm	L mm
rhc 15	6761100	77	¾	18	16
rhc 40	6761200	77	1	22	19
rhc 60	6761300	77	1 ¼	28	22

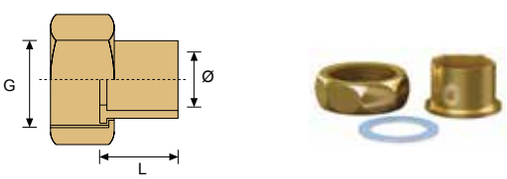

Counterflange - stainless steel

Flange For Type	Article No	Material Group	DN	Ø mm
rhc 150	6770200	77	65	76.1
rhc 200	6770200	77	65	76.1
rhc 300	6770400	77	100	114.3

Counterflange - steel

Flange For Type	Article No	Material Group	DN	Ø mm
rhc 150	6770100	77	65	76.1
rhc 200	6770100	77	65	76.1
rhc 300	6770300	77	100	114.3



When ordering, we recommend ordering 2 sets (equal to 4 units) of counterflanges per heat exchanger.

Longtherm Thermal Insulation

- Longtherm thermal insulation made from 20 mm polyurethane rigid foam for minimal heat loss
- Design consisting of two robust semi-circular shells, easy to mount
- Encased in PS foil for increased shock resistance
- Maximum operating temperature 135°C
- Starting at type rhc 150/180, the 40 mm mineral wool thermal insulation is fitted with with an aluminium outer cladding



Model	Number of Plates	Article No	Material Group	Dimensions L x W x H mm
rhc 15	10-20	6750000	77	108 x 127 x 282
rhc 15	30	6750100	77	153 x 127 x 282
rhc 40	10-20	6750200	77	128 x 179 x 400
rhc 40	30-40	6750300	77	174 x 179 x 400
rhc 40	50-60	6750400	77	218 x 179 x 400
rhc 60	6-24	6750500	77	150 x 179 x 600
rhc 60	30-40	6750600	77	180 x 179 x 600
rhc 60	50-60	6750700	77	228 x 179 x 600
rhc 60	80-100	6750800	77	322 x 179 x 600
r...c 85	30-40	6750900	77	180 x 325 x 600
r...c 85	50-60	6751000	77	228 x 325 x 600
r...c 85	80-100	6751100	77	322 x 325 x 600
r...c 85	120	6751200	77	440 x 325 x 600
rhc 150	50-60	6751300	77	228 x 325 x 600
rhc 150	80-100	6751400	77	322 x 325 x 600
rhc 150	120-150	6751500	77	440 x 325 x 600
rhc 150	180-200	6751600	77	580 x 358 x 620
rhc 200	50-80	6751700	77	297 x 358 x 890
rhc 200	100-120	6751800	77	390 x 358 x 890
rhc 200	150	6751900	77	459 x 358 x 890
rhc 200	180-200	6752000	77	574 x 358 x 890
rhc 300	50-80	6752100	77	318 x 520 x 980
rhc 300	100-150	6752200	77	483 x 520 x 980
rhc 300	180-200	6752300	77	647 x 520 x 980

The thermal insulation is not suitable for cooling systems/plants

Longtherm Bracket

- A stable foot construction is available for models 85 and 150.
  A foot construction complete with transport strap that can be removed after assembly is offered for model 200.

Model rhc 300 is supplied as standard with a leg construction and transport strap.

Type	Article No	Material Group	a mm	b mm	c mm
r...c 85	6771100	77	138	598	-
rhc 150	6771100	77	158	579	-
rhc 200	6771300	77	158	848	989
rhc 300	- [1)]	-	231	954	1092

[1)] Included with the rhc 300



rhc 150*

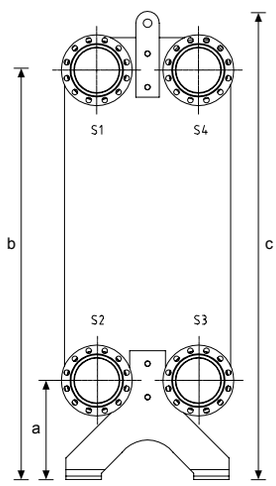

Quick Selection Table For Reflex Longtherm

- For detailed calculations, refer to our brochure “Pressurisation Systems - Planning, Calculation, Equipment” or visit www.reflex.de to use our Reflex Pro calculation software

Floor Heating

Primary Circuit Secondary Circuit		70/50°C 40/50°C	70/50°C 35/45°C	55/49°C 40/45°C	55/40°C 30/40°C	80/60°C 50/70°C	80/60°C 55/75°C	
		HEAT OUTPUT						Article No Thermal Insulation
Type	Article No	kW	kW	kW	kW	kW	kW	
rhc 15/10	6712100	11	8	11	4	-	-	6750000
rhc 15/20	6712200	22	22	22	10	5	-	6750100
rhc 15/30	6712300	32	32	32	15	10	-	6750200
rhc 40/10	6713100	13	13	13	5	11	-	6750200
rhc 40/20	6713200	27	27	27	12	31	4	6750300
rhc 40/30	6713300	40	40	40	19	52	8	6750300
rhc 40/40	6713400	53	53	53	25	73	11	6750300
rhc 40/50	6713500	64	65	65	32	95	15	6750400
rhc 40/60	6713600	75	76	76	37	116	18	6750400
rhc 60/10	6714300	11	11	11	-	19	8	6750500
rhc 60/14	6714400	16	16	16	-	28	14	6750500
rhc 60/20	6714500	23	23	23	10	42	24	6750500
rhc 60/24	6714600	28	28	28	13	52	31	6750500
rhc 60/30	6714700	35	34	35	16	65	41	6750600

Designed for maximum pressure losses: 20 kPa (2mWs)

Potable Water Heating

Primary Circuit Secondary Circuit		70/50°C 10/60°C	70/25°C 10/60°C	65/40°C 10/60°C	55/30°C 10/50°C	65/40°C* 10/60°C	40/25°C* 15/25°C	
		HEAT OUTPUT						Article No Thermal Insulation
Type	Article No	kW	kW	kW	kW	kW	kW	
rhc 15/20	6712200	14	-	-	-	-	-	6750000
rhc 15/30	6712300	24	-	6	-	-	8	6750100
rhc 40/10	6713100	27	-	7	-	-	9	6750200
rhc 40/20	6713200	54	8	20	11	9	25	6750200
rhc 40/30	6713300	81	14	33	18	16	40	6750300
rhc 40/40	6713400	106	20	47	26	23	53	6750300
rhc 40/50	6713500	129	26	61	33	30	65	6750400
rhc 40/60	6713600	151	32	75	41	37	76	6750400
rhc 60/10	6714300	24	15	29	19	17	10	6750500
rhc 60/14	6714400	33	27	41	33	31	16	6750500
rhc 60/20	6714500	48	45	59	55	51	23	6750500
rhc 60/24	6714600	57	57	71	70	66	28	6750500
rhc 60/30	6714700	71	76	88	90	90	34	6750600

Designed for maximum pressure losses: 20 kPa (2mWs)

* 38% glycol

District Heating

Primary Circuit Secondary Circuit		130/55°C 50/90°C	130/55°C 50/70°C	130/60°C 55/80°C	110/55°C 50/90°C	110/55°C 50/70°C	110/60°C 55/80°C	
		HEAT OUTPUT						Article No Thermal Insulation
Type	Article No	kW	kW	kW	kW	kW	kW	
rhc 15/10	6712100	-	5	3	-	-	-	6750000
rhc 15/20	6712200	4	16	11	-	10	5	6750100
rhc 15/30	6712300	7	27	18	-	16	9	6750200
rhc 40/10	6713100	9	27	21	-	19	11	6750200
rhc 40/20	6713200	27	54	59	10	52	32	6750300
rhc 40/30	6713300	45	80	98	16	83	54	6750300
rhc 40/40	6713400	65	105	136	23	108	76	6750300
rhc 40/50	6713500	83	129	161	30	129	97	6750400
rhc 40/60	6713600	101	150	189	37	150	120	6750400
rhc 60/10	6714300	45	23	29	17	23	29	6750500
rhc 60/14	6714400	67	33	41	30	33	41	6750500
rhc 60/20	6714500	94	47	59	51	47	59	6750500
rhc 60/24	6714600	112	56	71	65	56	70	6750500
rhc 60/30	6714700	140	70	88	84	70	87	6750600

Designed for maximum pressure losses: 20 kPa (2mWs)

Services



Count on us - from the initial

Reflex offer a range of services to assist you in finding the solution that best suits your needs. Take advantage of our combined expertise and experience and develop professional solutions together with us, down to the very last detail.



Made-to-measure design: With the Reflex Pro calculation program

Take the easiest route to correct design and sizing: Reflex Pro is the proven, continuously developed software solution you can use to quickly and simply achieve precise results.The software is available in three versions and we also offer a CAD library of our products for integration into your construction programmes.

Visit www.reflex.de/pro for further information and the option of downloading free of charge.



Reflex Pro Web

The online version calculates pressure retention and heat transfer systems in a few simple steps. The results are provided in the form of a PDF or text file for further use.

Reflex Pro App

Reflex Pro is available as an app for Android phone, iPhone, iPad and iPod touch! Whether you need to make a quick calculation on site or design a project on your mobile you will always leave a professional impression with your customers with the Reflex Pro app.

Reflex Pro Win

The full range of services for convenient use even without an Internet connection. The download version for Windows systems is perfect when you are regularly planning and designing pressure retention and heat transfer systems.

idea to the solution



Our field sales team - always on the road for you

Our Reflex field sales team is your first point of contact when you need professional advice on site. From recommending relevant products to design and support in the preparation of a tender. You can rely on our experts!

Call our central phone number or check out www.reflex.de under Contact Us to find the field sales representative responsible for your region.



Our product literature - designed to be used

Make sure your decisions about all future steps are based on solid foundations with Reflex product information. You will find everything you need to know about products and systems in our brochures and at www.reflex.de. Well arranged and clearly explained from the wider context to technical details.

Request the latest Reflex brochures directly from your Reflex field sales engineer, via our central phone number or even simpler online as PDF at www.reflex.de.



Region Nordic
Reflex Nordic
Johan Roennblad
Ratakatu 6
10300 Karjaa
Finland
Mobile: +358 40 160 2288
johan.roennblad@reflex.de

Region Eastern Europe
Regional Sales Director:
Jacek Kieszkowski

Reflex POLSKA Sp. z o.o.
Dr. Alfred Jerszynski
ul. Swojska 13 60-592
Poznan Poland
Phone: +48 61 653 14 02
Fax: +48 61 653 14 04
office@reflex.pl
www.reflex.pl

Reflex Russia
Konstantin Ortlieb
Prospect Andropova, 18,
Korpus 6, Office 5-07
115432 Moscow
Russia
Phone: +7 495 363 15 49
Fax: +7 495 363 11 84
info@reflex-rus.ru
www.reflex-rus.ru

Reflex CZ, s.r.o.
Vit Gabriel
Sezemicka 2757/2
193 00 Prag 9
Czech Republic
Phone: +420 272 090 301
Fax: +420 272 090 308
reflex@reflexcz.cz
www.reflexcz.cz

Reflex SK, s.r.o.
Peter Paltik
038 42 Rakovo
Slovakia
Phone: +421 43 423 9154
Fax: +421 43 423 0983
paltik@reflexsk.sk
www.reflexsk.sk

Reflex Baltic States & Lithuania
Vygantas Milaknis
Lithuania
Mobile: +370 687 27 817
milaknis@post.omnitel.net

Estonia
Ivar Pärn
Mobile +372 5108662
ivar@oventrex.ee

Latvia
Agris Pavlukevics
Mobile +371 29101453
skanore@mail.lv

Reflex Ukraine
Anatol Pivtorak
Mobile: +380 67 408 33 69
anatol.pivtorak@gmail.com

Reflex Belorussia, Kazachstan
Jacek Kieszkowski
Mobile: +48 784 053747
jacek.kieszkowski@reflex.de

Region Western Europe
Regional Sales Director:
Frédéric Passot

Reflex France
Frédéric Passot
Tour Part-Dieu
129 rue Servient
69326 Lyon Cedex 03
France
Phone: +33 4 8191 9159
Fax: +33 4 7803 1631

Reflex Nederland B.V.
Roderick van Geel
Kerkstraat 2a
2971 AL Bleskensgraaf CA
The Nederlands
Phone: +31 184 67 05 30
Fax: +31 184 67 05 31
r.vangeel@reflexnederland.nl
www.reflexnederland.nl

Reflex Belux
Michel Blain
Mobile: +32 474 59 80 09
michel.blain@reflex.de

Reflex UK + Ireland
Tim Williams
Mobile: +44 77 02 49 31 68
tim.williams@reflexuk.co.uk
www.reflexuk.co.uk

Reflex Spain, Portugal
Frederic Passot
Mobile: +33 6 1295 4079
frederic.passot@reflex.de

Region METAC
Regional Sales Director:
Moustapha Fahmy

Reflex Middle East
Özgür Hündür
Mobile: +90 541 805 52 00
ozgur.hundur@reflex.de

Reflex Turkey / Caucasia
Da€han ‹nal
Mobile: +90 549 605 52 10
daghan.inal@reflex.de

Reflex Africa
Moustapha Fahmy
Mobile: +49 151 180 242 68
moustapha.fahmy@reflex.de

Reflex Gulf States
Pramod Kadkol
Mobile: +97 150 340 8459
pramod.kadkol@reflex.ae

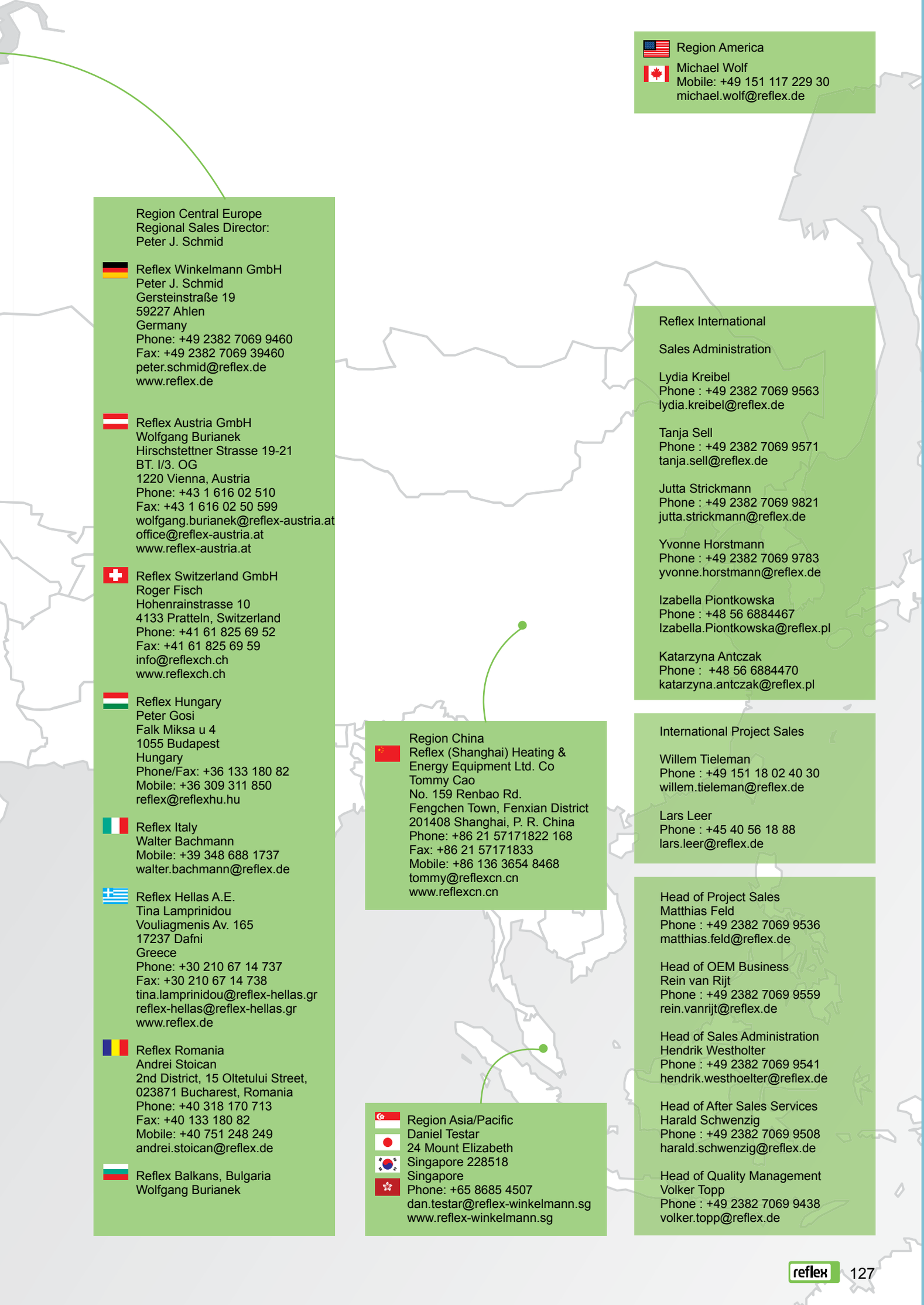

Region America
Michael Wolf
Mobile: +49 151 117 229 30
michael.wolf@reflex.de

Region Central Europe
Regional Sales Director:
Peter J. Schmid

Reflex Winkelmann GmbH
Peter J. Schmid
Gersteinstraße 19
59227 Ahlen
Germany
Phone: +49 2382 7069 9460
Fax: +49 2382 7069 39460
peter.schmid@reflex.de
www.reflex.de

Reflex Austria GmbH
Wolfgang Burianek
Hirschstettner Strasse 19-21
BT. I/3. OG
1220 Vienna, Austria
Phone: +43 1 616 02 510
Fax: +43 1 616 02 50 599
wolfgang.burianek@reflex-austria.at
office@reflex-austria.at
www.reflex-austria.at

Reflex Switzerland GmbH
Roger Fisch
Hohenrainstrasse 10
4133 Pratteln, Switzerland
Phone: +41 61 825 69 52
Fax: +41 61 825 69 59
info@reflexch.ch
www.reflexch.ch

Reflex Hungary
Peter Gosi
Falk Miksa u 4
1055 Budapest
Hungary
Phone/Fax: +36 133 180 82
Mobile: +36 309 311 850
reflex@reflexhu.hu

Reflex Italy
Walter Bachmann
Mobile: +39 348 688 1737
walter.bachmann@reflex.de

Reflex Hellas A.E.
Tina Lamprinidou
Vouliagmenis Av. 165
17237 Dafni
Greece
Phone: +30 210 67 14 737
Fax: +30 210 67 14 738
tina.lamprinidou@reflex-hellas.gr
reflex-hellas@reflex-hellas.gr
www.reflex.de

Reflex Romania
Andrei Stoican
2nd District, 15 Oltetului Street,
023871 Bucharest, Romania
Phone: +40 318 170 713
Fax: +40 133 180 82
Mobile: +40 751 248 249
andrei.stoican@reflex.de

Reflex Balkans, Bulgaria
Wolfgang Burianek

Region China
Reflex (Shanghai) Heating &
Energy Equipment Ltd. Co
Tommy Cao
No. 159 Renbao Rd.
Fengchen Town, Fenxian District
201408 Shanghai, P. R. China
Phone: +86 21 57171822 168
Fax: +86 21 57171833
Mobile: +86 136 3654 8468
tommy@reflexcn.cn
www.reflexcn.cn

Region Asia/Pacific
Daniel Testar
24 Mount Elizabeth
Singapore 228518
Singapore
Phone: +65 8685 4507
dan.testar@reflex-winkelmann.sg
www.reflex-winkelmann.sg

Reflex International

Sales Administration

Lydia Kreibel
Phone : +49 2382 7069 9563
lydia.kreibel@reflex.de

Tanja Sell
Phone : +49 2382 7069 9571
tanja.sell@reflex.de

Jutta Strickmann
Phone : +49 2382 7069 9821
jutta.strickmann@reflex.de

Yvonne Horstmann
Phone : +49 2382 7069 9783
yvonne.horstmann@reflex.de

Izabella Piontkowska
Phone : +48 56 6884467
Izabella.Piontkowska@reflex.pl

Katarzyna Antczak
Phone : +48 56 6884470
katarzyna.antczak@reflex.pl

International Project Sales

Willem Tieleman
Phone : +49 151 18 02 40 30
willem.tieleman@reflex.de

Lars Leer
Phone : +45 40 56 18 88
lars.leer@reflex.de

Head of Project Sales
Matthias Feld
Phone : +49 2382 7069 9536
matthias.feld@reflex.de

Head of OEM Business
Rein van Rijt
Phone : +49 2382 7069 9559
rein.vanrijt@reflex.de

Head of Sales Administration
Hendrik Westholter
Phone : +49 2382 7069 9541
hendrik.westhoelter@reflex.de

Head of After Sales Services
Harald Schwenzig
Phone : +49 2382 7069 9508
harald.schwenzig@reflex.de

Head of Quality Management
Volker Topp
Phone : +49 2382 7069 9438
volker.topp@reflex.de

Notes

Notes



The Reflex brand name is well known in Europe and throughout the world as a major leader in pressure control technology for heating, chilled and potable water applications. Our world wide growth has allowed us to build several state-of-the-art manufacturing facilities supplying the industry with outstanding quality products. Reflex Winkelmann GmbH having its headquarters in the Westfalian city of Ahlen is not only a recognized leader in expansion vessels but also a significant manufacturer of advanced system solutions such as compressor and pump-controlled pressurisation systems, automatic air separation systems and hot water heaters.



Reflex has achieved its significant global growth today thanks to the unique combination of its world-class manufacturing skills, dedication to high-product quality at an affordable price and its commitment to continuous technical training of its people, our most precious resource. Our tradition goes back to 1898. This family oriented company started its core business in the elaboration of steel. A business in which we are recognised leaders today. The Heinrich Winkelmann Group form the parent company to a whole group of diversified manufacturing companies serving the heating segment and the whole automotive industry with over 3.100 employees. A tradition of more than a hundred years in this business makes us real experts today.

PI1520en (UK-Version)/ 9125502 / 12 -15

reflex
Thinking solutions.

Reflex Winkelmann GmbH
Gersteinstrasse 19
59227 Ahlen, Germany

Phone: +49 2382 7069-0
Fax: +49 2382 7069-558
www.reflex.de