Motor Starters Appreciation Course

Schneider Electric

Agenda

1. Introduction to AC Motor
2. Motor Control and Starters
   > DOL
   > Star Delta
   > Auto Transformer
   > Electronic Soft Starter
3. Motor Protection
   > Current Protection
   > Type Coordination

Confidential Property of Schneider Electric

1. Introduction to AC Motor

Electric Motor

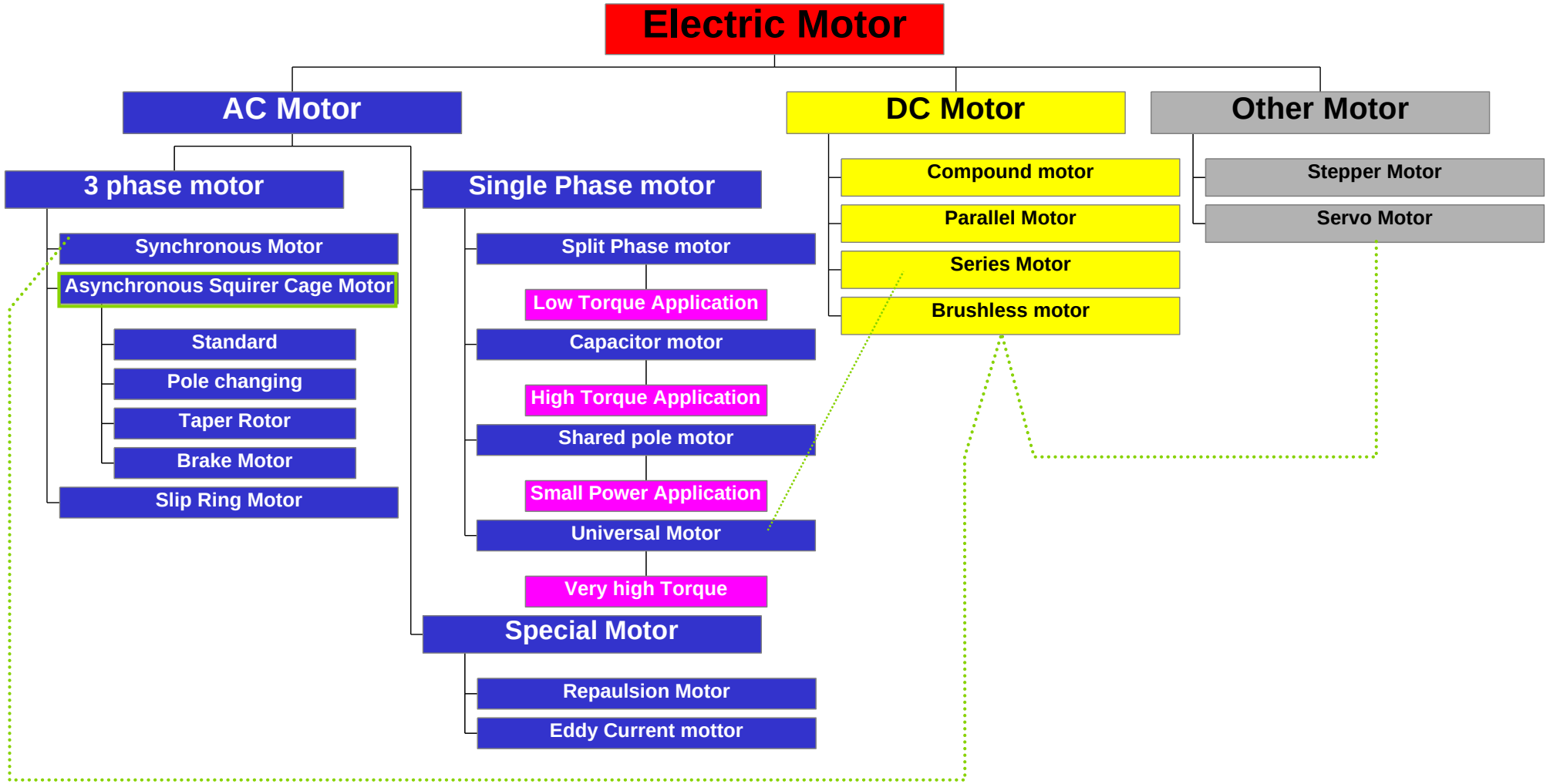

Confidential Property of Schneider Electric

Electric Motor – Asychronous Squirrel Cage Motor

- Most often totally enclosed construction
  - IP 44
  - IP 55

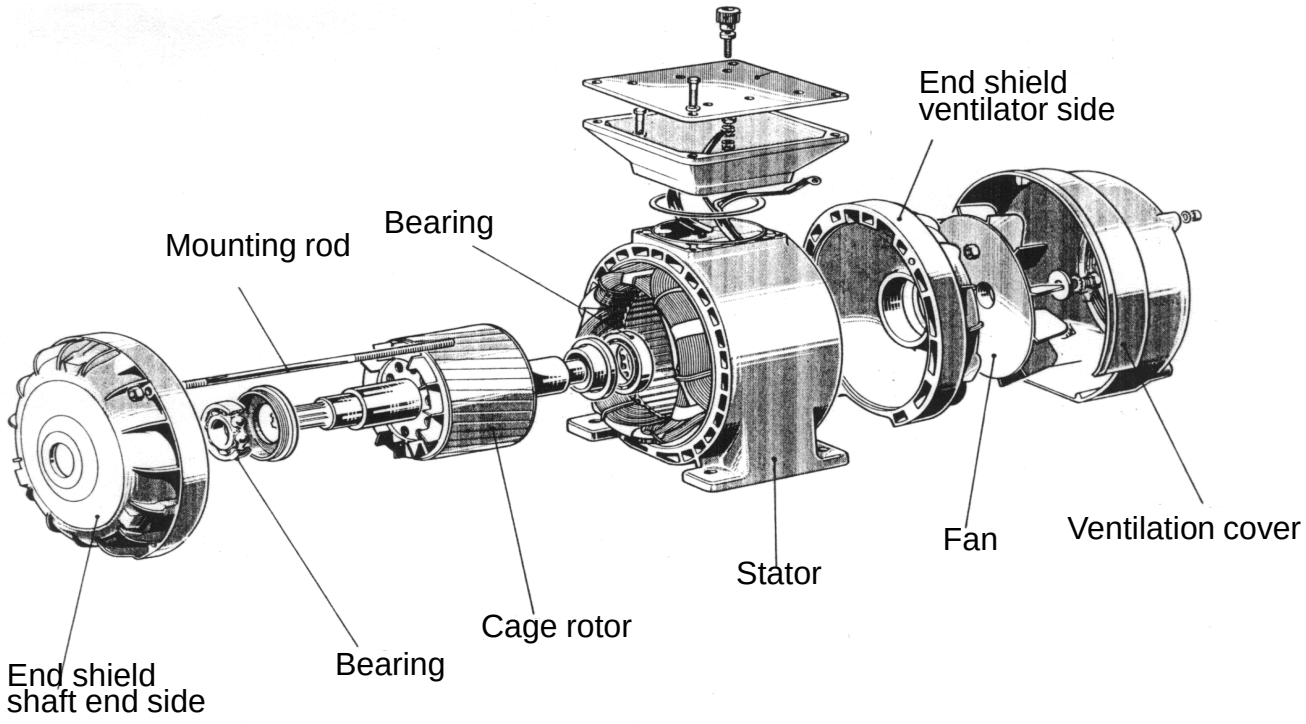

Confidential Property of Schneider Electric

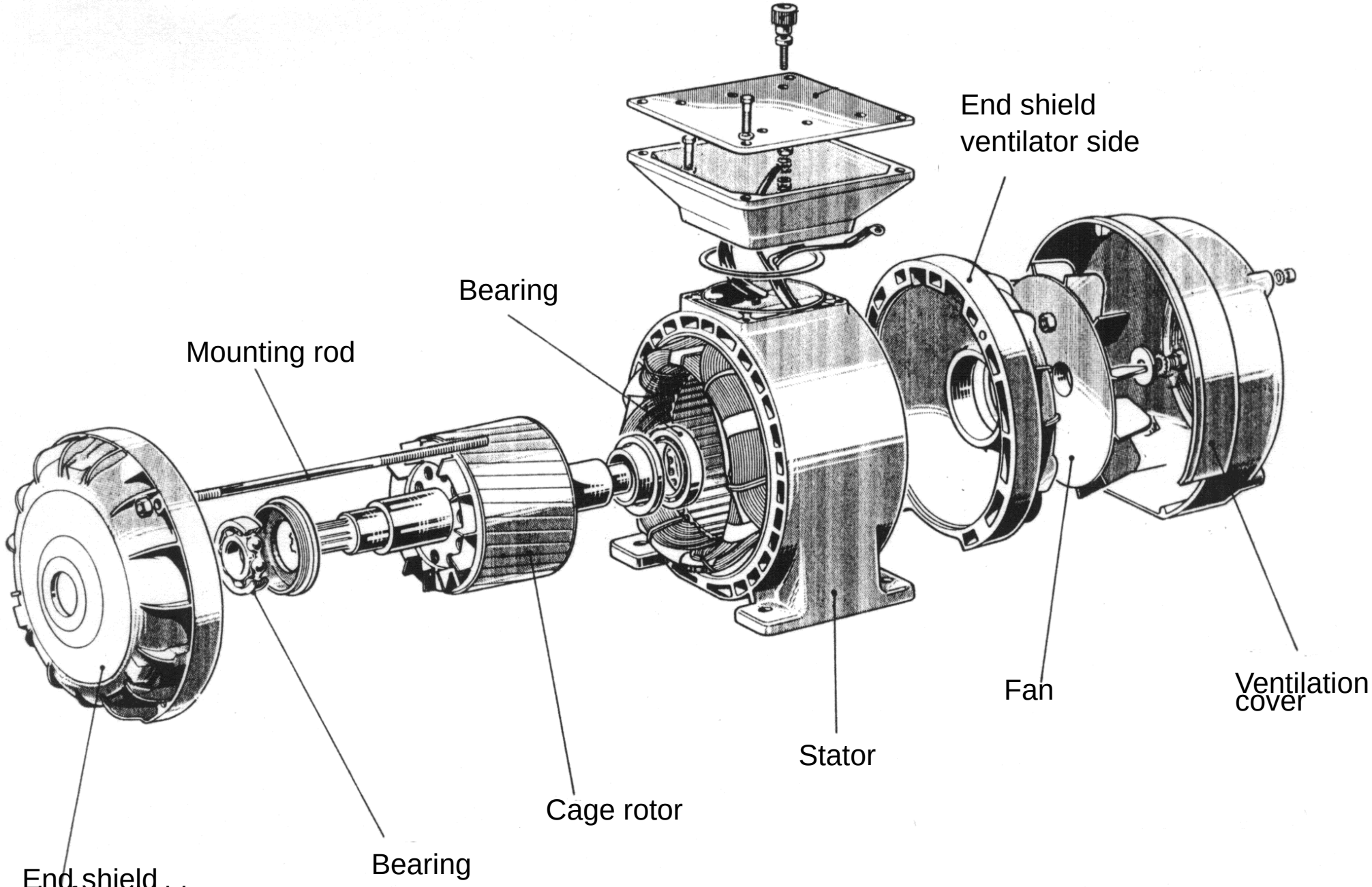
End shield
ventilator side
Bearing
Mounting rod
Fan
Ventilation
cover
Stator
Cage rotor
Bearing
End shield
shaft end side

Asynchronous squirrel cage motor

Operation

- **Characteristic magnitudes**

g	= slip
P_a	= power absorbed
P_u	= useful power
η	= efficiency
cos φ	= phase angle
n_s	= synchronism speed
n	= speed of rotation
I_n	= rated motor current
U	= supply voltage

Currents induced in the rotor by rotation of the magnetic field create motor torque (LENZ's law).

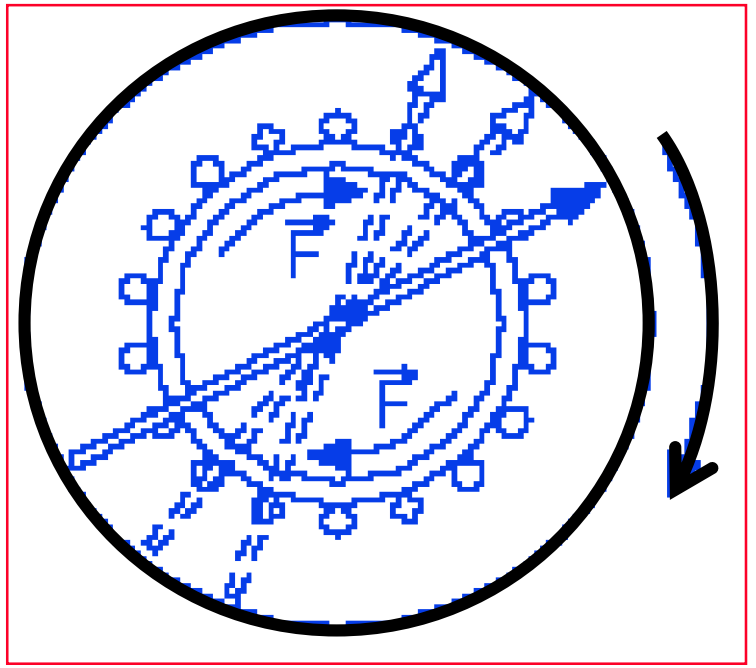

Rotating Magnetic Field

Confidential Property of Schneider Electric

Asynchronous squirrel cage motor

Connection

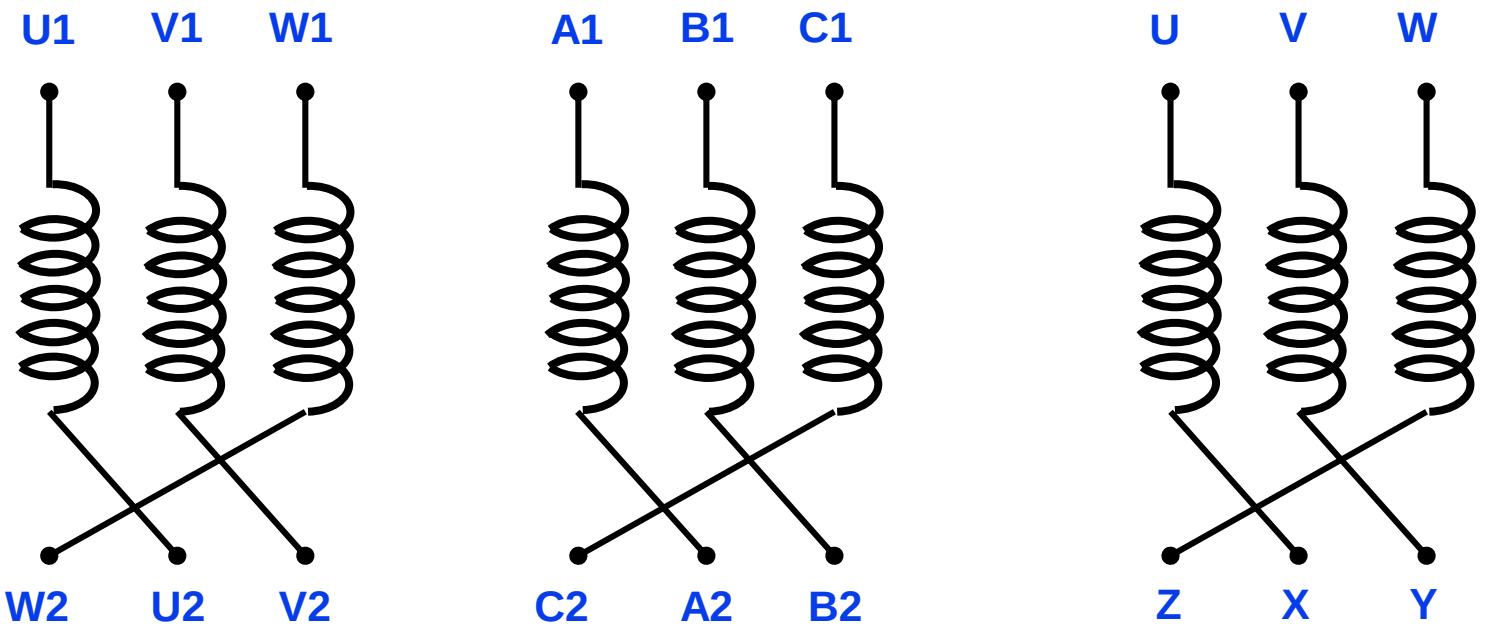

Confidential Property of Schneider Electric

Asynchronous squirrel cage motor

Connection

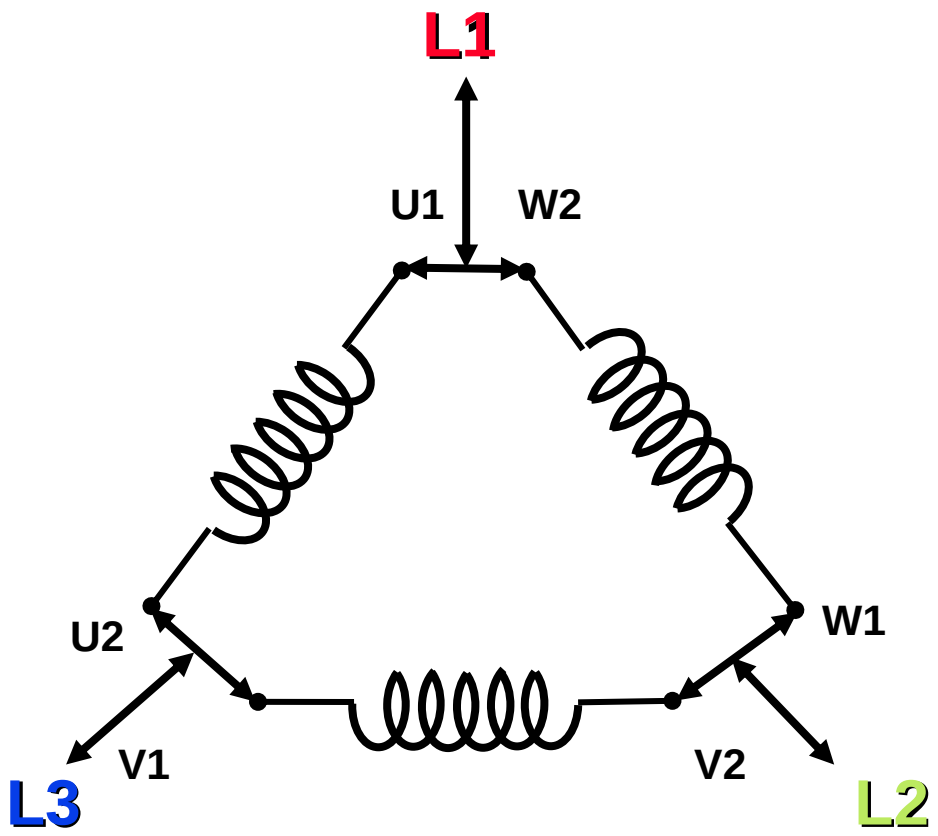

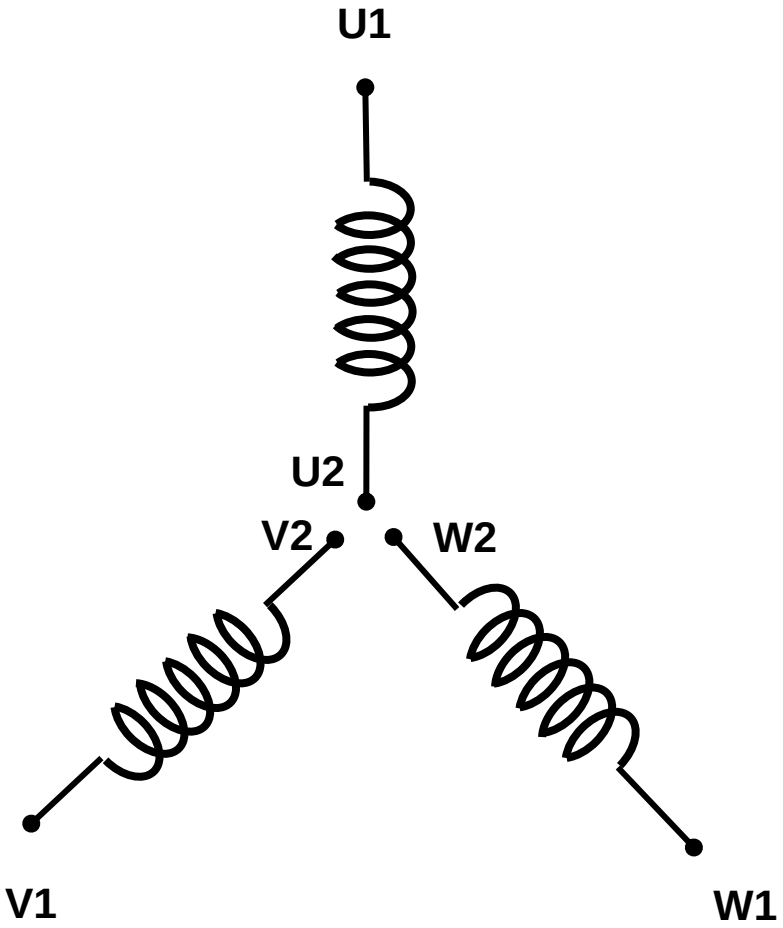

Confidential Property of Schneider Electric

Asynchronous squirrel cage motor

Line / Phase Voltage and Line / Phase current

In STAR connection

Line Voltage = √3 Phase Voltage
Line Current = Phase Current

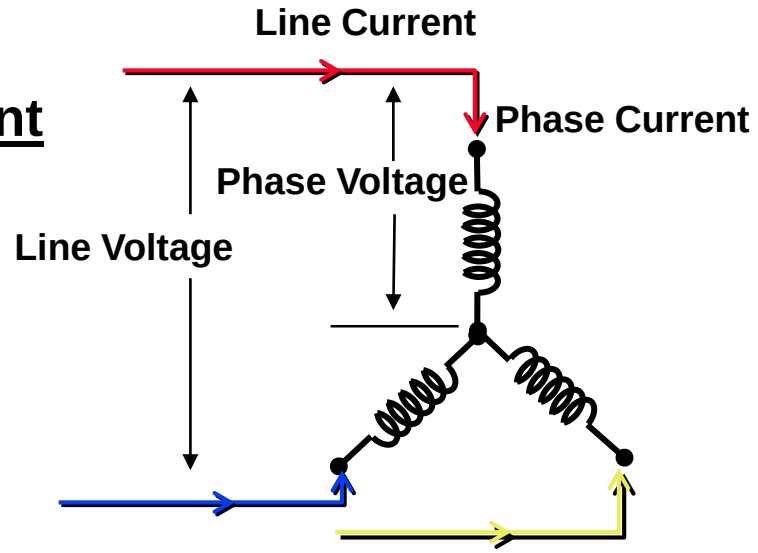

In DELTA connection

Line Voltage = Phase Voltage
Line Current = √3 Phase Current

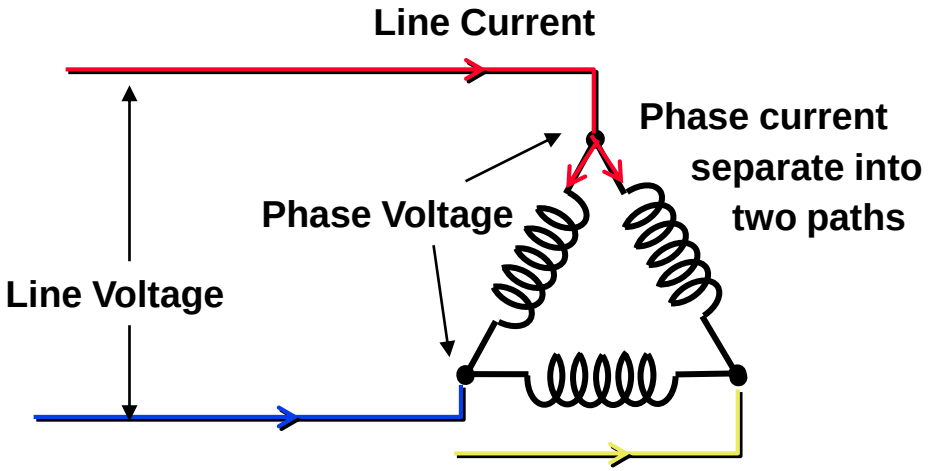

Confidential Property of Schneider Electric

3-phase asynchronous slip-ring motor

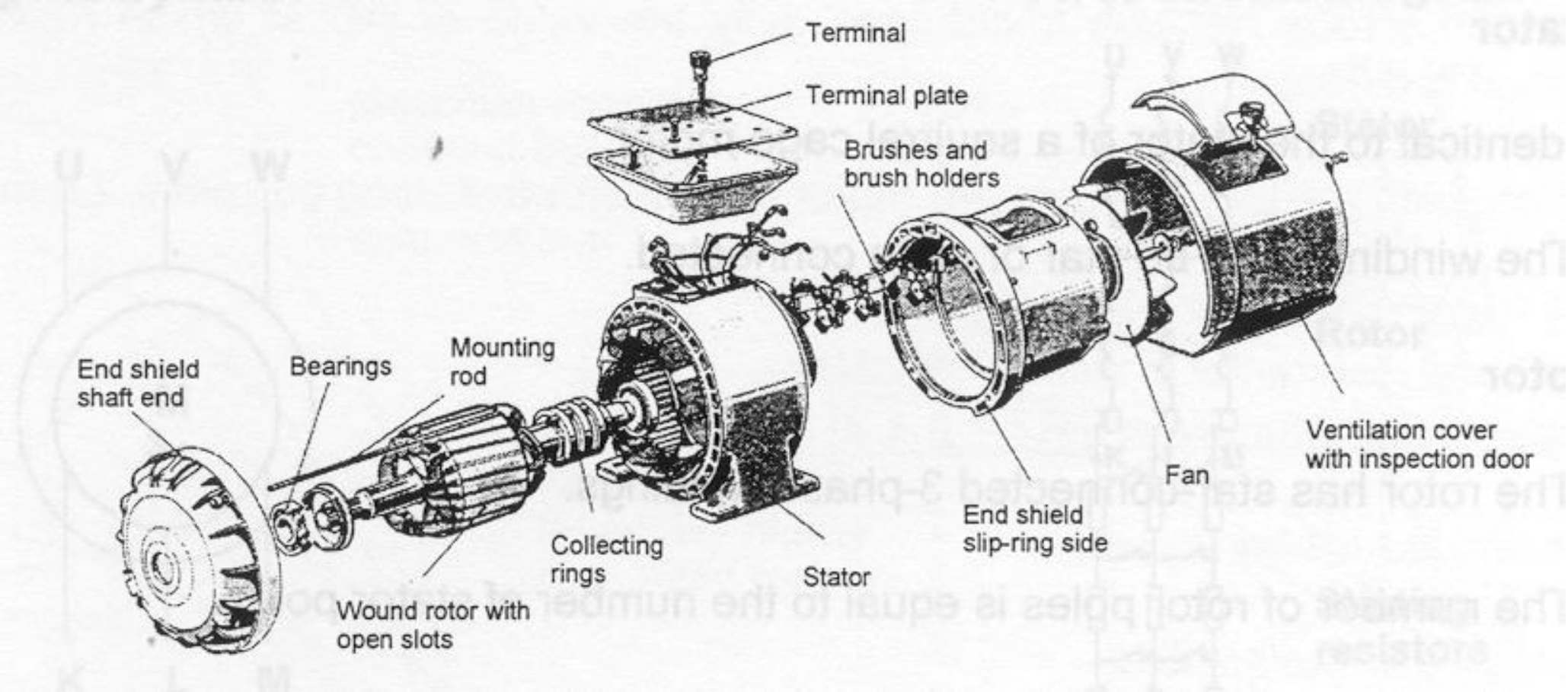

Confidential Property of Schneider Electric

3-phase asynchronous slip-ring motor

Composition

• Graphic symbol

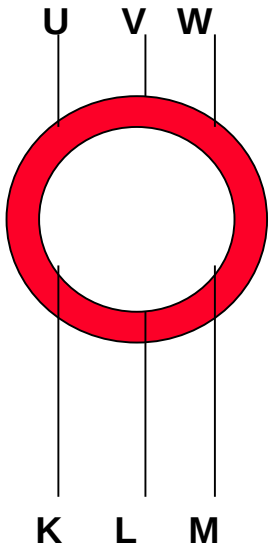

• Power circuit diagram

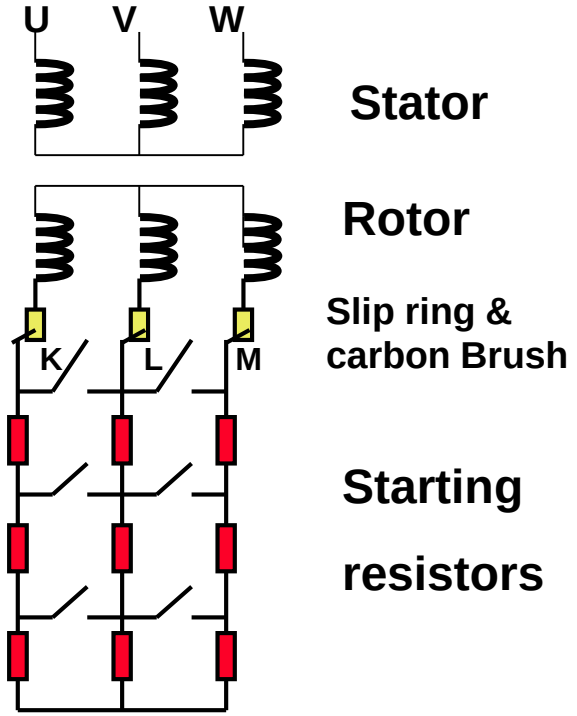

Confidential Property of Schneider Electric

3-phase asynchronous slip-ring motor Starting

• Increase in rotor resistance

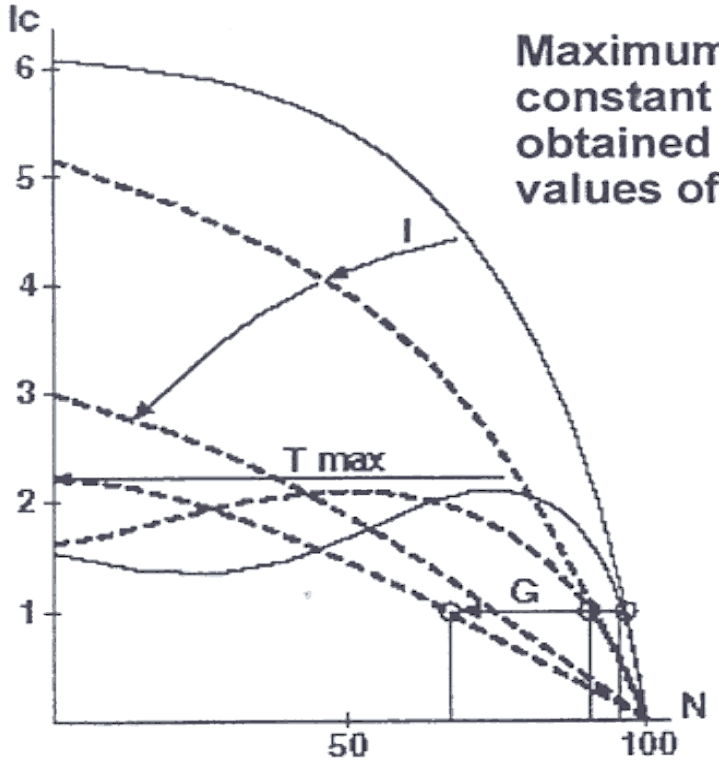

Maximum torque is constant but is obtained for different values of slip

Starting torque is invariably higher than rated torque

• Rotor resistor starting

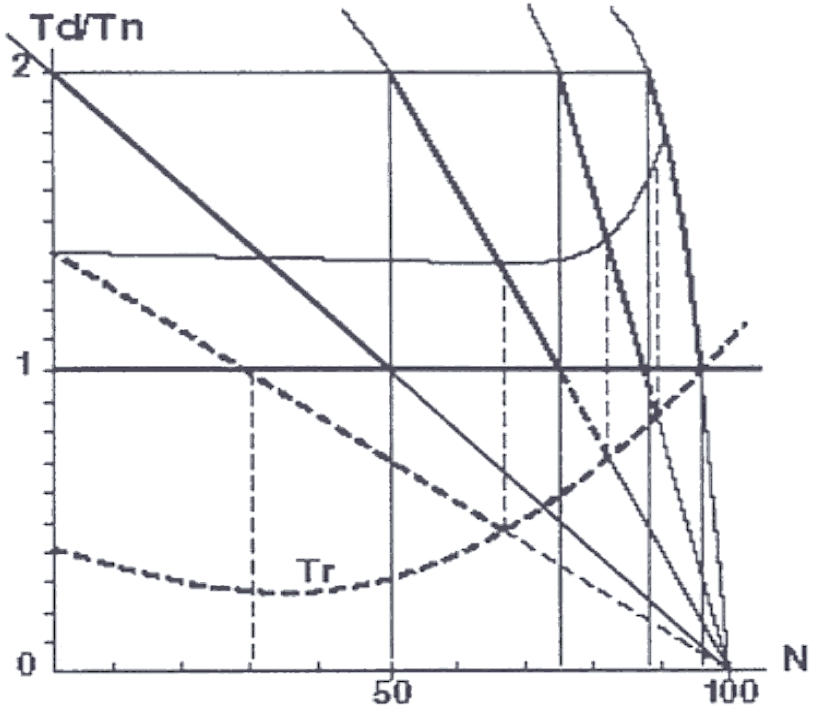

Confidential Property of Schneider Electric

Motor Ratings

Current values for power in kW				
Rated operating power *(1)*	Guide values of rated operating currents at			
	230 V	400 V	500 V	690 V
kW	A	A	A	A
0.06	0.35	0.2	0.16	0.12
0.09	0.52	0.3	0.24	0.17
0.12	0.7	0.44	0.32	0.23
0.18	1	0.6	0.48	0.35
0.25	1.5	0.85	0.68	0.49
0.37	1.9	1.1	0.88	0.64
0.55	2.6	1.5	1.2	0.87
0.75	3.3	1.9	1.5	1.1
1.1	4.7	2.7	2.2	1.6
1.5	6.3	3.6	2.9	2.1
2.2	8.5	4.9	3.9	2.8
3	11.3	6.5	5.2	3.8
4	15	8.5	6.8	4.9
5.5	20	11.5	9.2	6.7
7.5	27	15.5	12.4	8.9
11	38	22	17.6	12.8
15	51	29	23	17
18.5	61	35	28	21
22	72	41	33	24
30	96	55	44	32
37	115	66	53	39
45	140	80	64	47
55	169	97	78	57
75	230	132	106	77
90	278	160	128	93
90	278	160	128	93
110	340	195	156	113
132	400	230	184	134
160	487	280	224	162
200	609	350	280	203
250	748	430	344	250
315	940	540	432	313
355	1061	610	488	354
400	1200	690	552	400
500	1478	850	680	493
560	1652	950	760	551
630	1844	1060	848	615
710	2070	1190	952	690
800	2340	1346	1076	780
900	2640	1518	1214	880
1000	2910	1673	1339	970

(1) Values compliant with standard IEC 60072-1 (50 Hz)

Confidential Property of Schneider Electric

Motor Thermal Class

> Referring to maximum use temperature in Celsius for which EIM is appropriate

> Extracted from IEC-62114

(Electrical Insulation Systems – Thermal Classification)

Table 1 – Thermal class designations

Thermal class designation	Historical designation
90	Y
105	A
120	E
130	B
155	F
180	H
200	200
220	220
250	250
Designation of thermal classes over 250 shall increase by increments of 25 and be designated accordingly.	
NOTE The old class C that was used for all temperatures above 180 °C has been replaced by the above thermal classes and is no longer valid.	

Confidential Property of Schneider Electric

Temperature rise limit

> Difference between the temperature of the part measured, and the temperature of the coolant measured

Table 10 – Assumed maximum ambient temperature

Altitude m	Thermal class		
	130 (B)	155 (F)	180 (H)
	Temperature °C		
1 000	40	40	40
2 000	32	30	28
3 000	24	19	15
4 000	16	9	3

Table 7 – Limits of temperature rise of windings indirectly cooled by air

Thermal class		130 (B)			155 (F)			180 (H)		
Method of measurement (Th = Thermometer, R = Resistance, ETD = Embedded temperature detector)		Th	R	ETD	Th	R	ETD	Th	R	ETD
		K	K	K	K	K	K	K	K	K
Item	Part of machine									
1a)	AC windings of machines having outputs of 5 000 kW (or kVA) or more	–	80	85[1)]	–	105	110[1)]	–	125	130[1)]
1b)	AC windings of machines having outputs above 200 kW (or kVA), but less than 5 000 kW (or kVA)	–	80	90[1)]	–	105	115[1)]	–	125	135[1)]
1c)	AC windings of machines having outputs of 200 kW (or kVA) or less, other than those in items 1d) or 1e)[2)]	–	80	–	–	105	–	–	125	–
1d)	AC windings of machines having rated outputs of less than 600 W (or VA)[2)]	–	85	–	–	110	–	–	130	–
1e)	AC windings which are self-cooled without a fan (IC 40) and/or with encapsulated windings[2)]	–	85	–	–	110	–	–	130	–
2	Windings of armatures having commutators	70	80	–	85	105	–	105	125	–
3	Field windings of a.c. and d.c. machines other than those in item 4	70	80	–	85	105	–	105	125	–
4a)	Field windings of synchronous machines with cylindrical rotors having a d.c. excitation winding embedded in slots, except synchronous induction motors	–	90	–	–	110	–	–	135	–
4b)	Insulated stationary field windings of d.c. machines having more than one layer	70	80	90	85	105	110	105	125	135
4c)	Low-resistance field windings of a.c. and d.c. machines having more than one layer and compensating windings of d.c. machines	80	80	–	100	100	–	125	125	–
4d)	Single-layer windings of a.c. and d.c. machines with exposed bare or varnished metal surfaces.[3)]	90	90	–	110	110	–	135	135	–

[1)] For adjustment for high-voltage a.c. windings see item 4 of Table 9.

[2)] With the application of the superposition test method to windings of machines rated at 200 kW (or kVA) or less with thermal classes 130 (B) and 155 (F), the limits of temperature rise given for the resistance method may be exceeded by 5 K.

[3)] Also includes multiple layer windings provided that the under layers are each in contact with the circulating primary coolant.

Confidential Property of Schneider Electric

2. Motor Starters

Control of AC Asynchronous Motor

Objective of a motor starter

- Start and stop of a motor
- Protection of devices against effects of electrical faults
- Ensure safety of personnel
- Maximize continuity of service

Isolation	**Disconnection from LV upstream distribution**
Short circuit protection	**Protection against damages caused by high current**
Switching	**On load breaking**
Overload protection	**Protection against effects of overload current**
Power Control	**Making & breaking of current taken by the load**

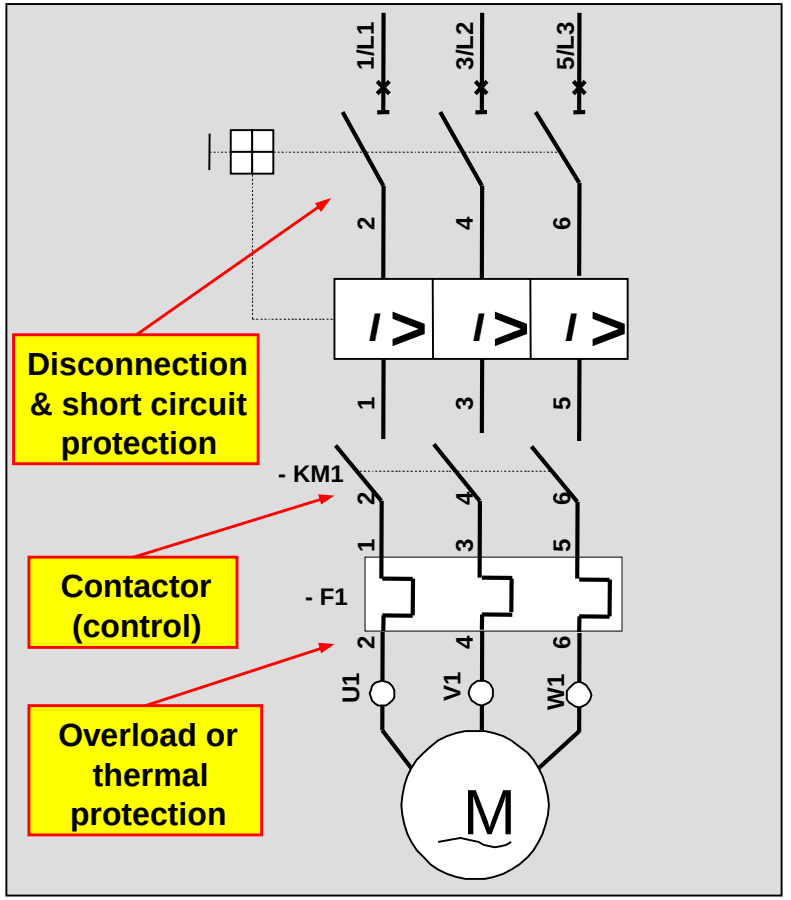

Confidential Property of Schneider Electric

AC Utilisation Categories
AC-1

Control of purely resistive load :

Controlling of heating systems and bulbs fall into AC-1 category

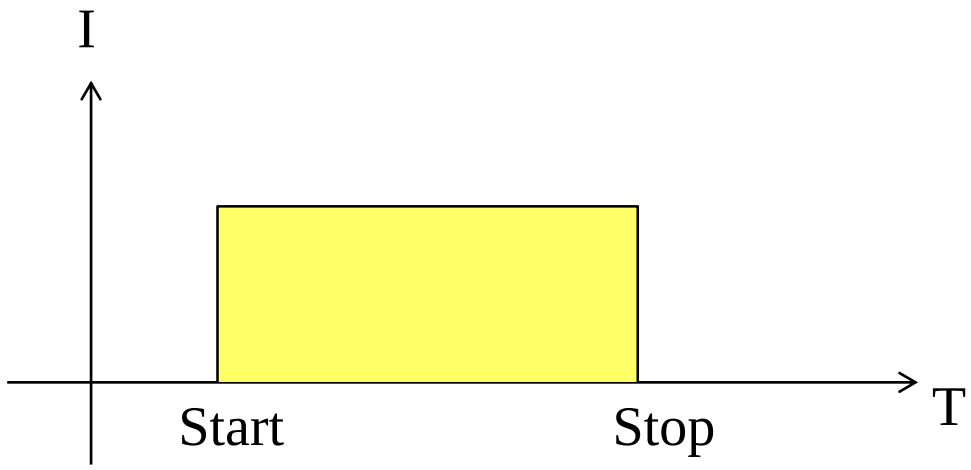

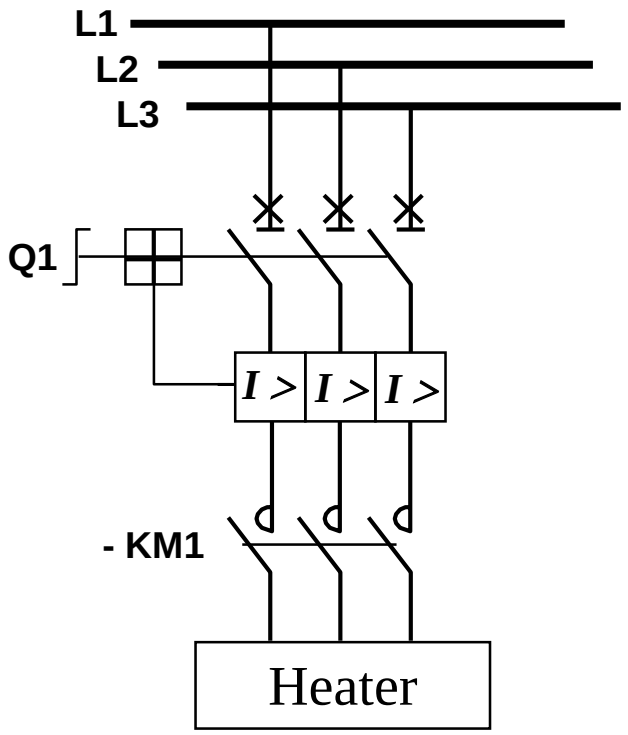

Motor Starter Solutions – Control and Protection components Oct 2001

Page 5/164

Confidential Property of Schneider Electric

AC Utilisation Categories
AC-3

Control of all motor applications (inductive load) :

Controlling of squirrel cage motors fall into AC-3 category

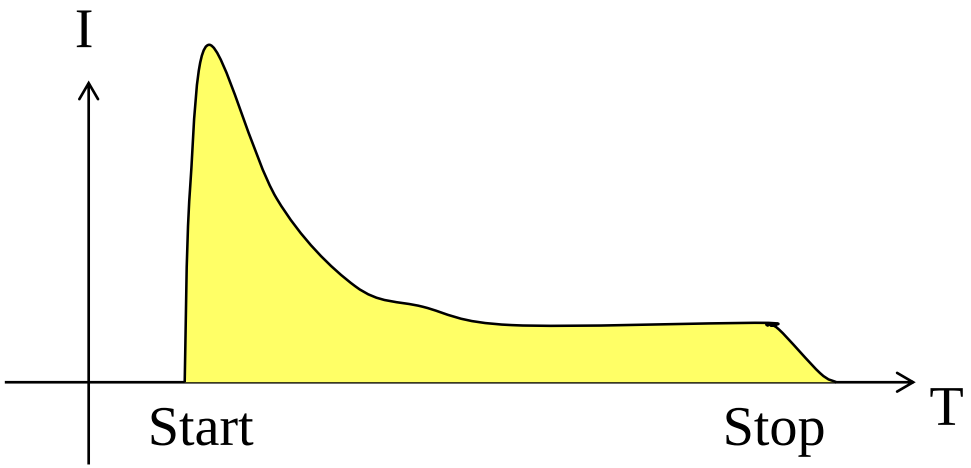

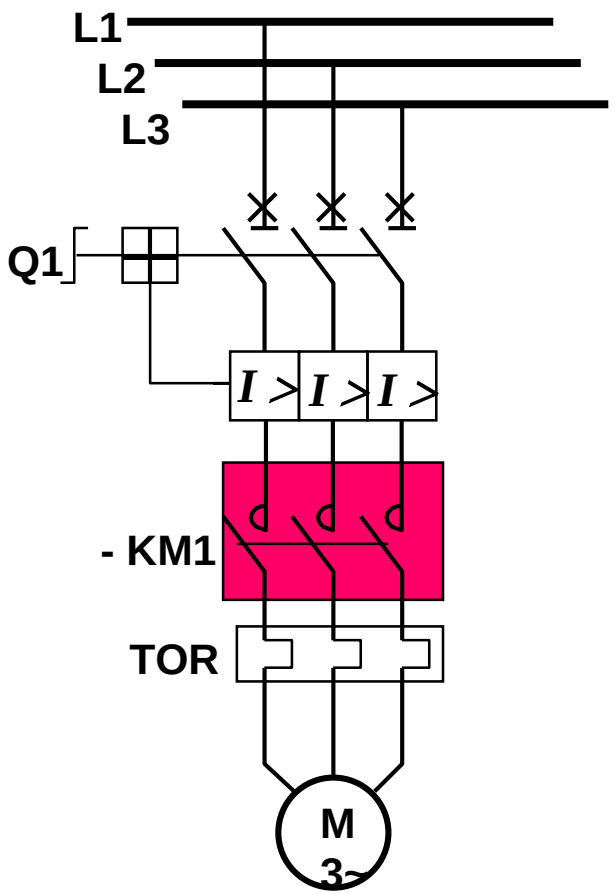

Motor Starter Solutions – Control and Protection components Oct 2001

Page 5/160 or 5/58

Confidential Property of Schneider Electric

AC Utilisation Categories
AC-2/4

Control for Inching and Plugging applications :

Controlling of cranes and rolling mills fall into AC-2/4 category

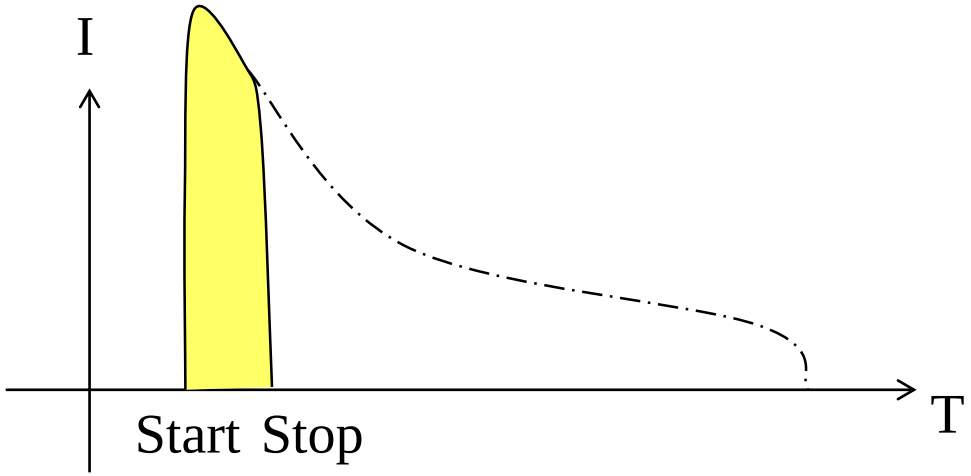

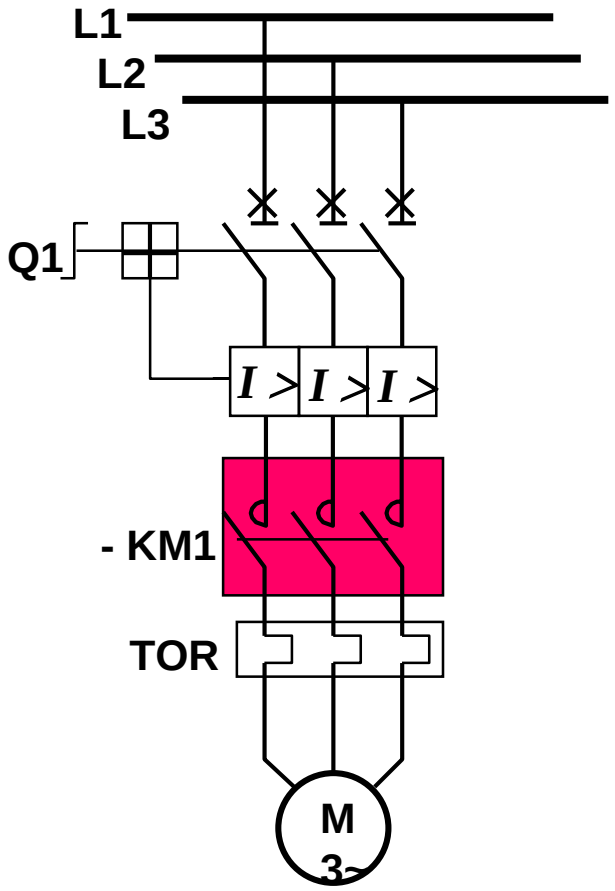

Motor Starter Solutions – Control and Protection components Oct 2001

Page 5/166

Contactor Selection

> Motor ampere (Ie)

> Motor application and starting characteristics

  > Utilisation Category

> Upsize or Not?

  > Electrical Durability

Confidential Property of Schneider Electric

Utilization Category Defined in IEC 60947-4-1

Table 1 – Utilization categories

Kind of current	Utilization categories	Typical applications
AC	AC-1	Non-inductive or slightly inductive loads, resistance furnaces
	AC-2	Slip-ring motors: starting, switching off
	AC-3	Squirrel-cage motors: starting, switching off motors during running[1)]
	AC-4	Squirrel-cage motors: starting, plugging, inching
	AC-5a	Switching of electric discharge lamp controls
	AC-5b	Switching of incand
	AC-6a	Switching of transfo
	AC-6b	Switching of capaci
	AC-7a[3)]	Slightly inductive lo applications
	AC-7b[3)]	Motor-loads for hou
	AC-8a	Hermetic refrigeran resetting of overloa
	AC-8b	Hermetic refrigerant compressor motor[2)] control with automatic resetting of overload releases
DC	DC-1	Non-inductive or slightly inductive loads, resistance furnaces
	DC-3	Shunt-motors: starting, plugging, inching
		Dynamic breaking of d.c. motors
	DC-5	Series-motors: starting, plugging, inching
		Dynamic breaking of d.c. motors
	DC-6	Switching of incandescent lamps

1) AC-3 category may be used for occasional inching (jogging) or plugging for limited time periods such as machine set-up; during such limited time periods, the number of such operations should not exceed five per minute or more than ten in a 10-min period.

2) A hermetic refrigerant compressor motor is a combination consisting of a compressor and a motor, both of which are enclosed in the same housing, with no external shaft or shaft seals, the motor operating in the refrigerant.

3) For AC-7a and AC-7b, see IEC 61095.

Confidential Property of Schneider Electric

Testing criteria to standard utilisation categories

Contactors

		Electrical durability: making and breaking conditions						Occasional duty: making and breaking conditions					
a.c. supply													
Typical applications	**Utilisation category**	**Making**			**Breaking**			**Making**			**Breaking**		
		I	**U**	**cos φ**	**I**	**U**	**cos φ**	**I**	**U**	**cos φ**	**I**	**U**	**cos φ**
Resistors, non inductive or slightly inductive loads	AC-1	Ie	Ue	0.95	Ie	Ue	0.95	1.5 Ie	1.05 Ue	0.8	1.5 Ie	1.05 Ue	0.8
Motors													
Slip ring motors: starting, breaking.	AC-2	2.5 Ie	Ue	0.65	2.5 Ie	Ue	0.65	4 Ie	1.05 Ue	0.65	4 Ie	1.05 Ue	0.65
Squirrel cage motors: starting, breaking whilst motor running.	AC-3												
	Ie ⩽ *(1)*	6 Ie	Ue	0.65	1 Ie	0.17 Ue	0.65	10 Ie	1.05 Ue	0.45	8 Ie	1.05 Ue	0.45
	Ie > *(2)*	6 Ie	Ue	0.35	1 Ie	0.17 Ue	0.35	10 Ie	1.05 Ue	0.35	8 Ie	1.05 Ue	0.35
Squirrel cage motors: starting, reversing, inching	AC-4												
	Ie ⩽ *(1)*	6 Ie	Ue	0.65	6 Ie	Ue	0.65	12 Ie	1.05 Ue	0.45	10 Ie	1.05 Ue	0.45
	Ie > *(2)*	6 Ie	Ue	0.35	6 Ie	Ue	0.35	12 Ie	1.05 Ue	0.35	10 Ie	1.05 Ue	0.35

(1) Ie ⩽ 17 A for electrical durability, Ie ⩽ 100 A for occasional duty.
(2) Ie > 17 A for electrical durability, Ie > 100 A for occasional duty.
(3) The value 6 P (in watts) is based on practical observations and is considered to represent the majority of d.c. magnetic loads up to the maximum limit of P = 50 W i.e. 6 P = 300 ms = L/R.
Above this, the loads are made up of smaller loads in parallel. The value 300 ms is therefore a maximum limit whatever the value of current drawn.

Confidential Property of Schneider Electric

Electrical Durability

Selection according to required electrical durability, in category AC-3 (Ue ≤ 440 V)

Control of 3-phase asynchronous squirrel cage motors with breaking whilst running.
The current broken (Ic) in category AC-3 is equal to the rated operational current (Ie) of the motor.

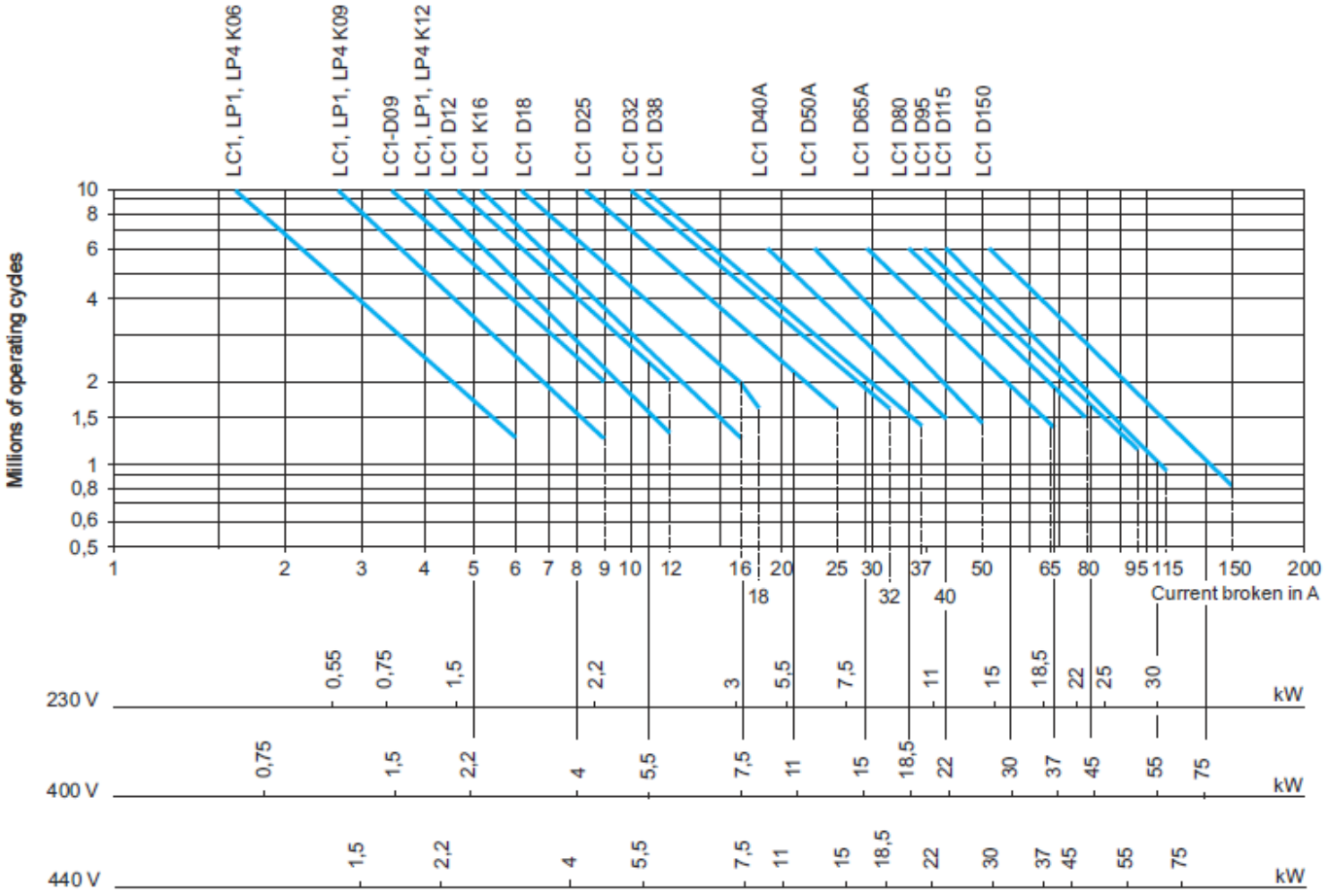

Operational power in kW-50 Hz.

Example:

Asynchronous motor with P = 5.5 kW - Ue = 400 V - Ie = 11 A - Ic = Ie = 11 A
or asynchronous motor with P = 5.5 kW - Ue = 415 V - Ie = 11 A - Ic = Ie = 11 A
3 million operating cycles required.
The above selection curves show the contactor rating needed: LC1 D18.

Motor Starter Trends

CONVENTIONAL STARTER

DOL (Direct On-Line) →

STAR / DELTA →

PRIMARY RESISTANCE →

AUTO - TRANS STARTER →

ELECTORNIC STARTER

SOFT STARTER →

VSD →



The choice of starting method is depending on the application (starting time, type of motor, torque, fixed / variable speed...)

Confidential Property of Schneider Electric

Direct Online Starter

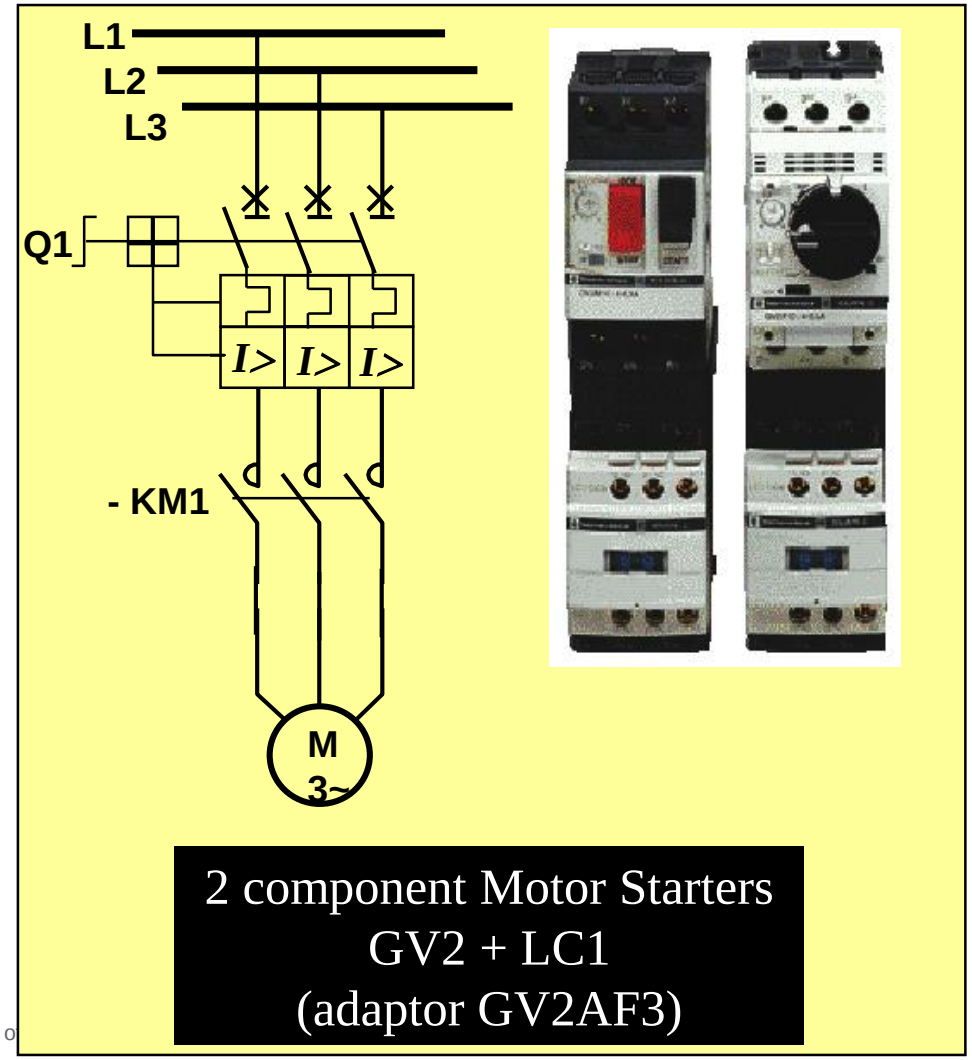

2 component Motor Starters
GV2 + LC1
(adaptor GV2AF3)



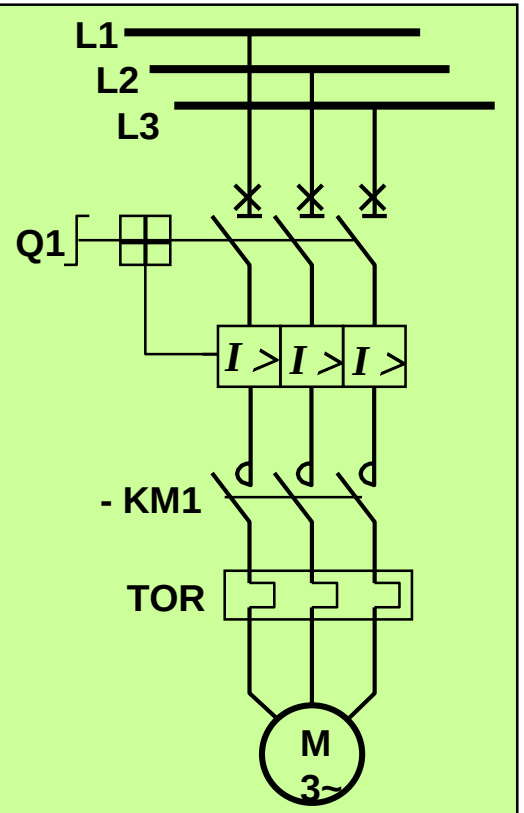

3 component Motor Starters
GV2L + LC1 + LRD
(adaptor GV2AF3)

Confidential Property o

Direct On-Line (D.O.L) Starting

Motor acts like low-resistance transformer, secondary (rotor cage) s/c. Primary and secondary currents are proportional, motor draw very high peak current

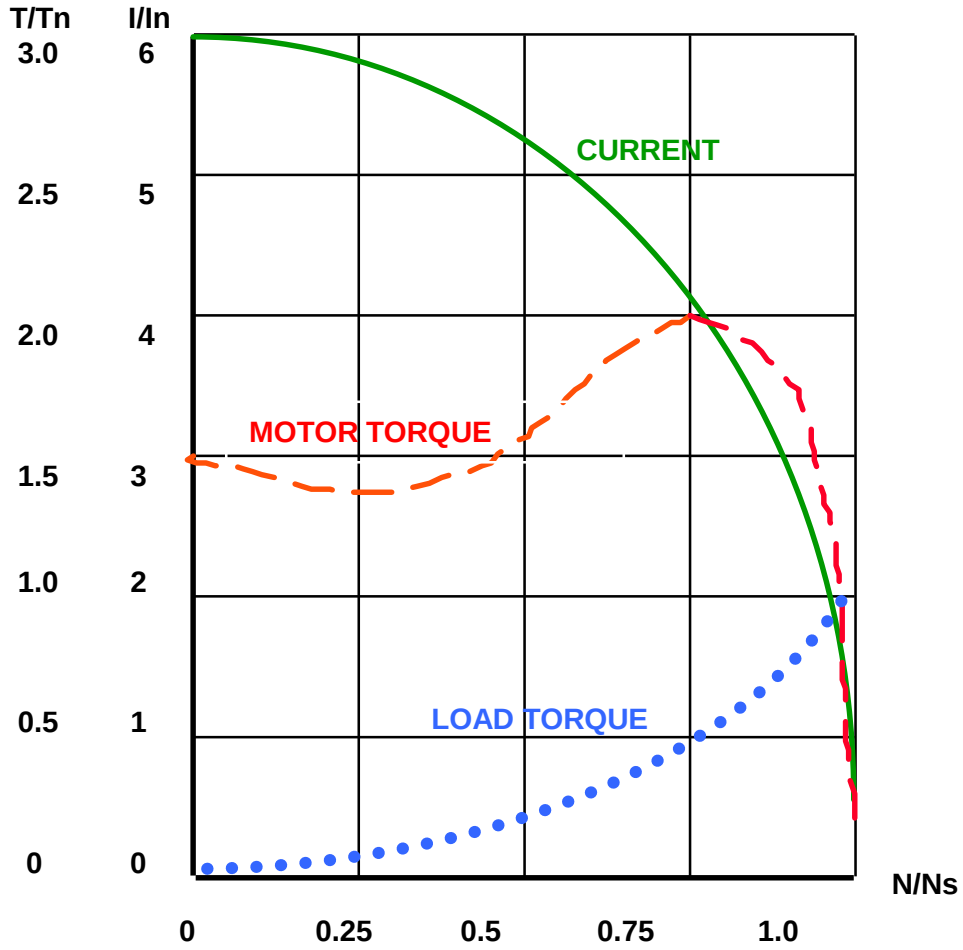

Starting CURRENT (Peak I) :
- 5 to 8 times nominal current

Starting TORQUE (Peak T) :
- 0.5 to 1.5 times nominal torque

Advantages :
- simple
- low cost equipment
- high starting torque
- fast run-up

Disadvantages :
- high peak current and serious voltage drop
- high mechanical wear and tear
- safety and comfort of user compromised

Confined to applications where :
- low power motors being used
- high starting torque (full load)

No parameter adjustment

Confidential Property of Schneider Electric

Selection – Direct On-line Starting

Component selection

1.) AC3 for all motor applications
- Making Capacity > 10 x In
- Breaking Capacity > 8 x In

2.) AC4 for inching and plugging
- Making Capacity > 12 x In
- Breaking Capacity > 10 x In

3.) Duty life cycle
- Averagely > One million cycle

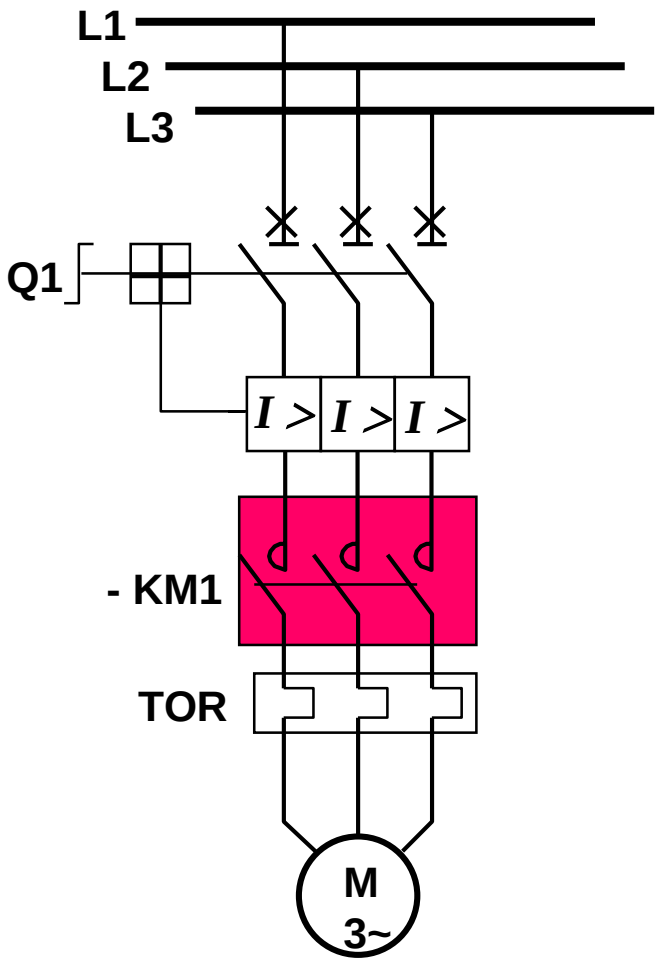

Confidential Property of Schneider Electric

Selection – Direct On-Line Starting

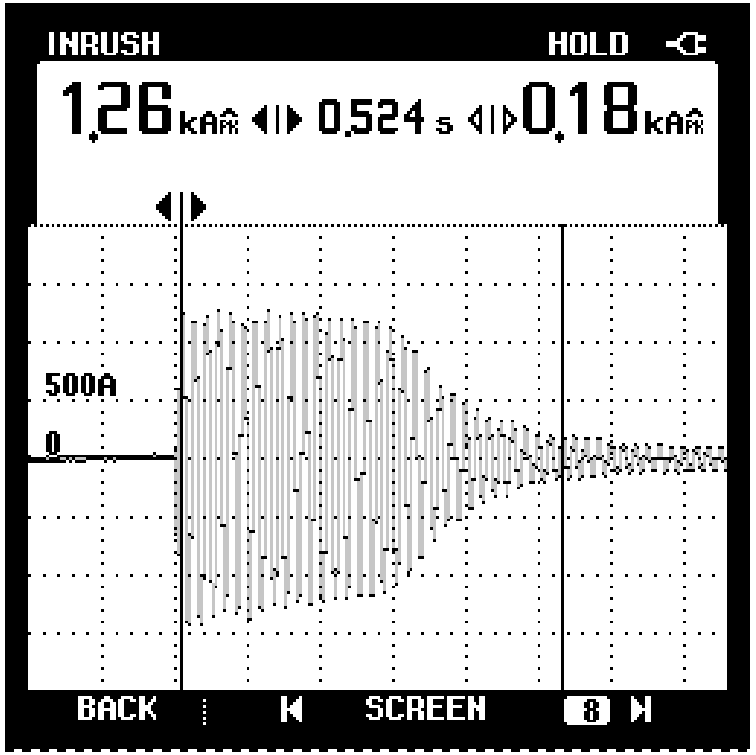

Starting inrush current measurement,
starting current, 891A
Sub-transient 1260A
starting time 0.524sec.
Starting w/o pressure.

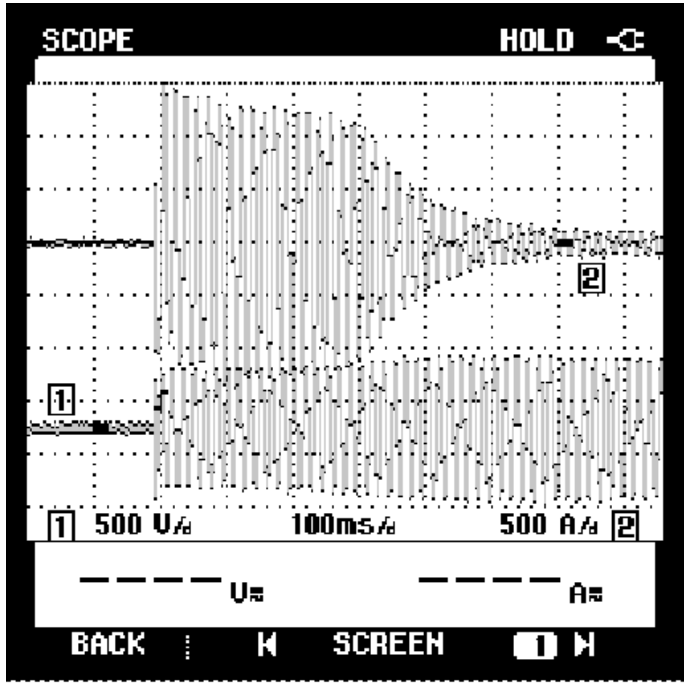

Channel 1 :
Line voltage, initial voltage 388V
(rms), stable at 460V(rms)
Channel 2 :
Line current, Sub-transient current
1600A, Starting current 1132A,
Starting time 0.6sec.
Overall condition : GOOD

Confidential Property of Schneider Electric

Asynchronous squirrel cage motor

Line / Phase Voltage and Line / Phase current

In STAR connection

Line Voltage = √3 Phase Voltage
Line Current = Phase Current

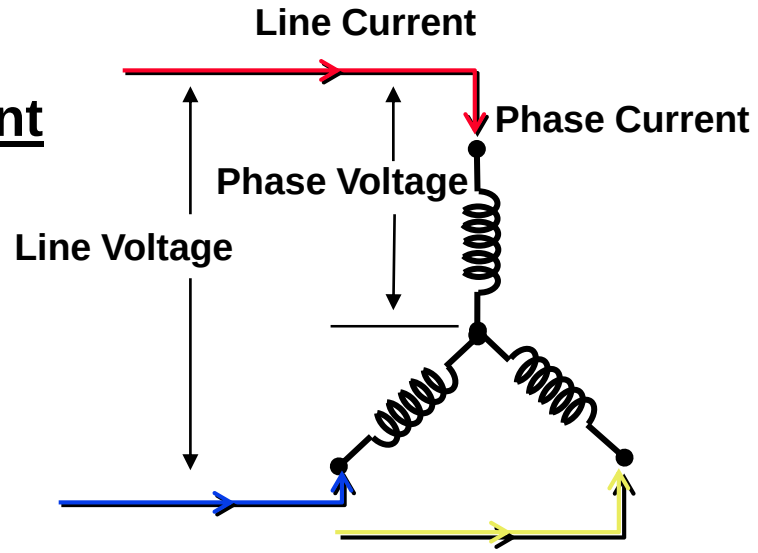

In DELTA connection

Line Voltage = Phase Voltage
Line Current = √3 Phase Current

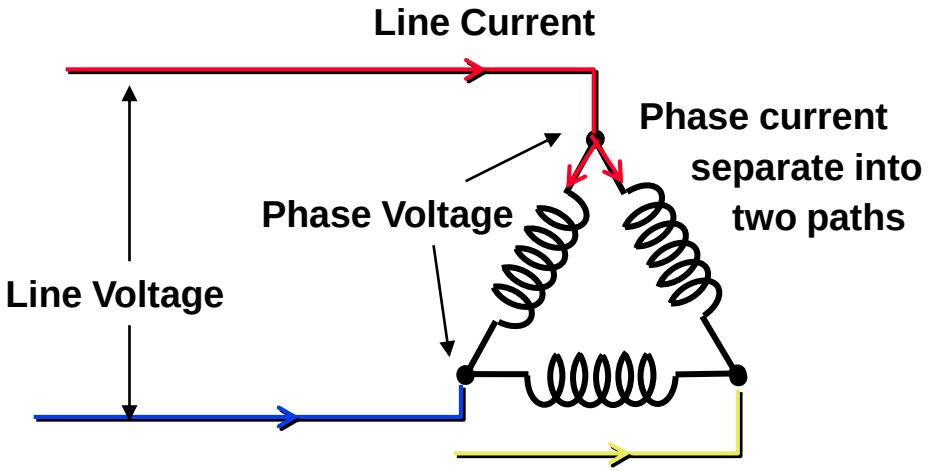

Confidential Property of Schneider Electric

Star-Delta Starting

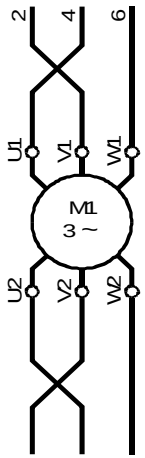

Recommended reverse direction wiring for rotation of the motor (standard motor viewed from shaft end)

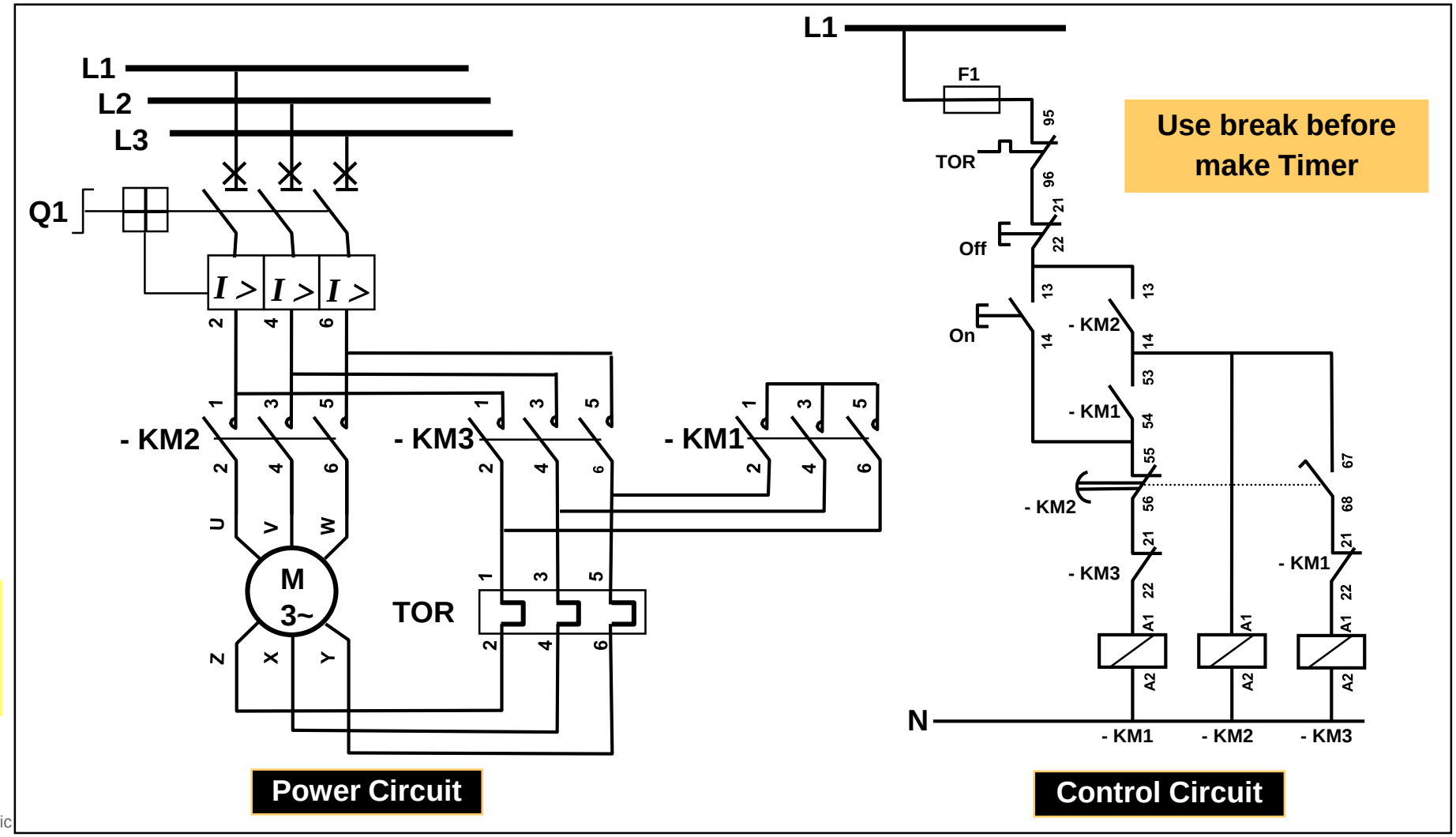

Selection – Star-Delta Wiring

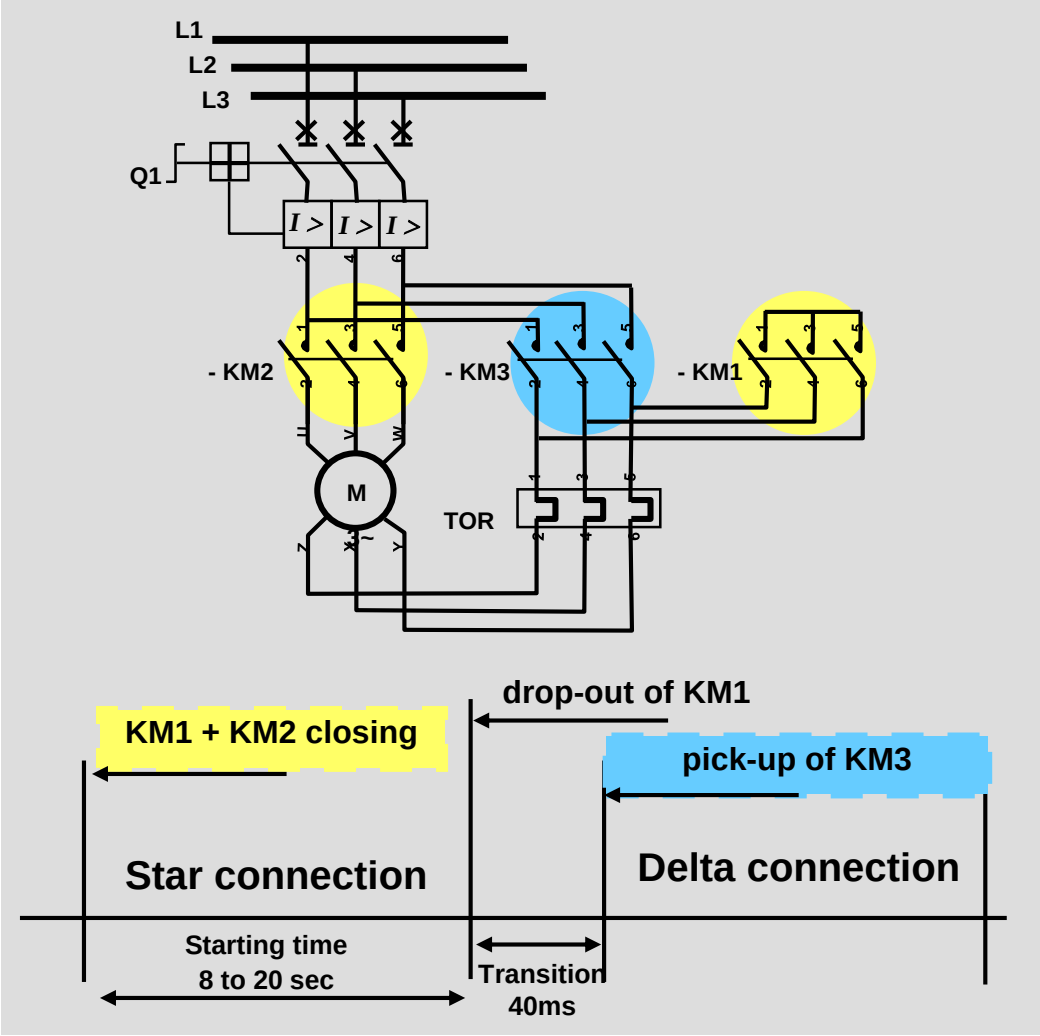



Components for Star-Delta Starting GV2 + LC1 (3pcs)

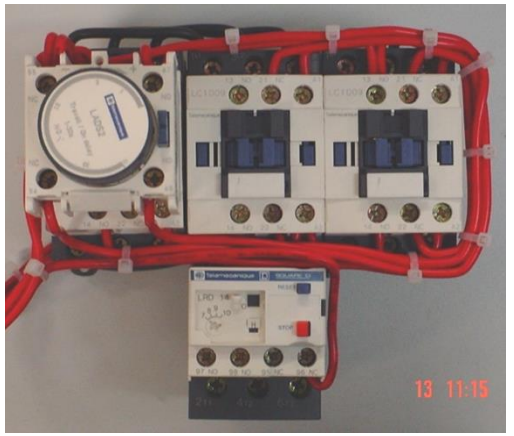

Components for Star-Delta Starting LC1 (3pcs) + LRD

Confidential Property of Schneider Electric

Star-Delta Starting

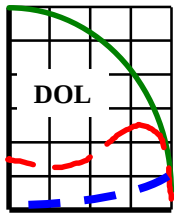

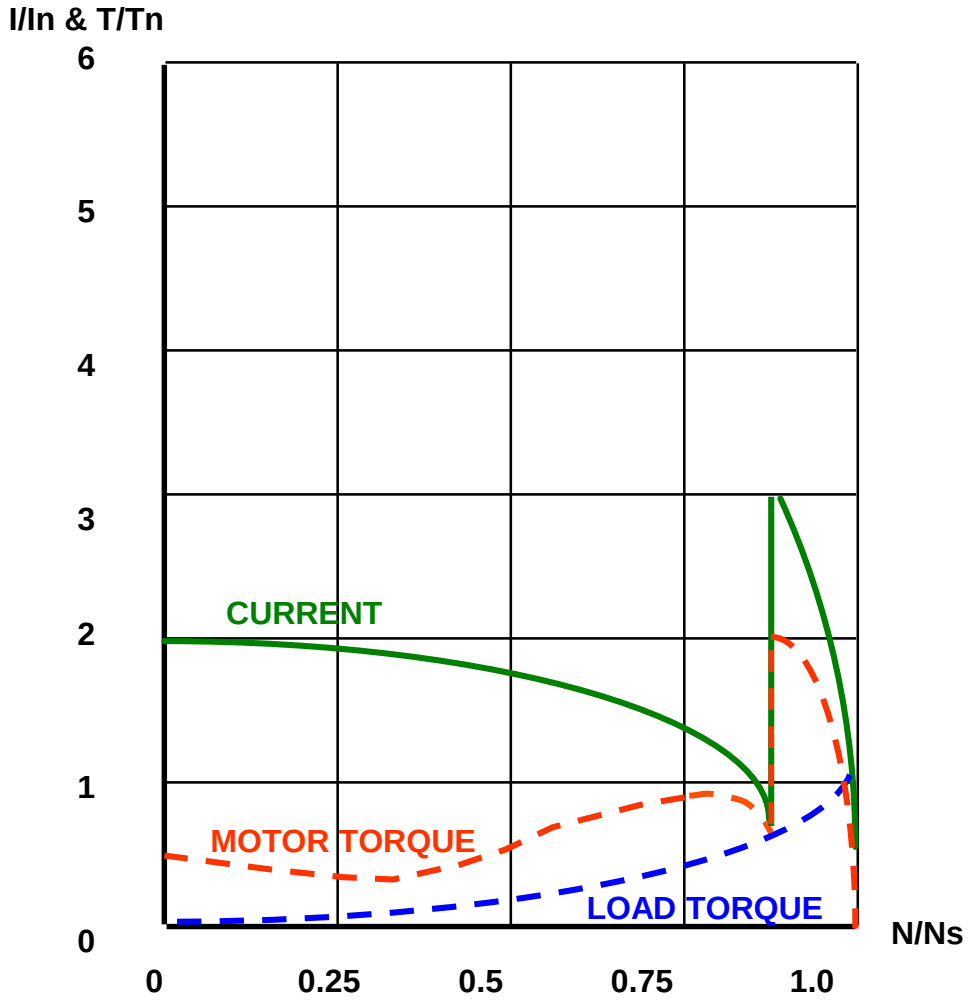

Starting CURRENT (Peak I) :
- 2 to 3 times nominal current

Starting TORQUE (Peak T) :
- 0.2 to 0.5 times nominal torque

Advantages :
- low starting current
- relatively simple
- low mechanical stress

Disadvantages :
- high peak current during “star-Delta” changeover
- low starting torque

Confined to applications where :
- no-load starting or starting with low resistive load
- 6 terminals motor

No Major adjustment

Confidential Property of Schneider Electric



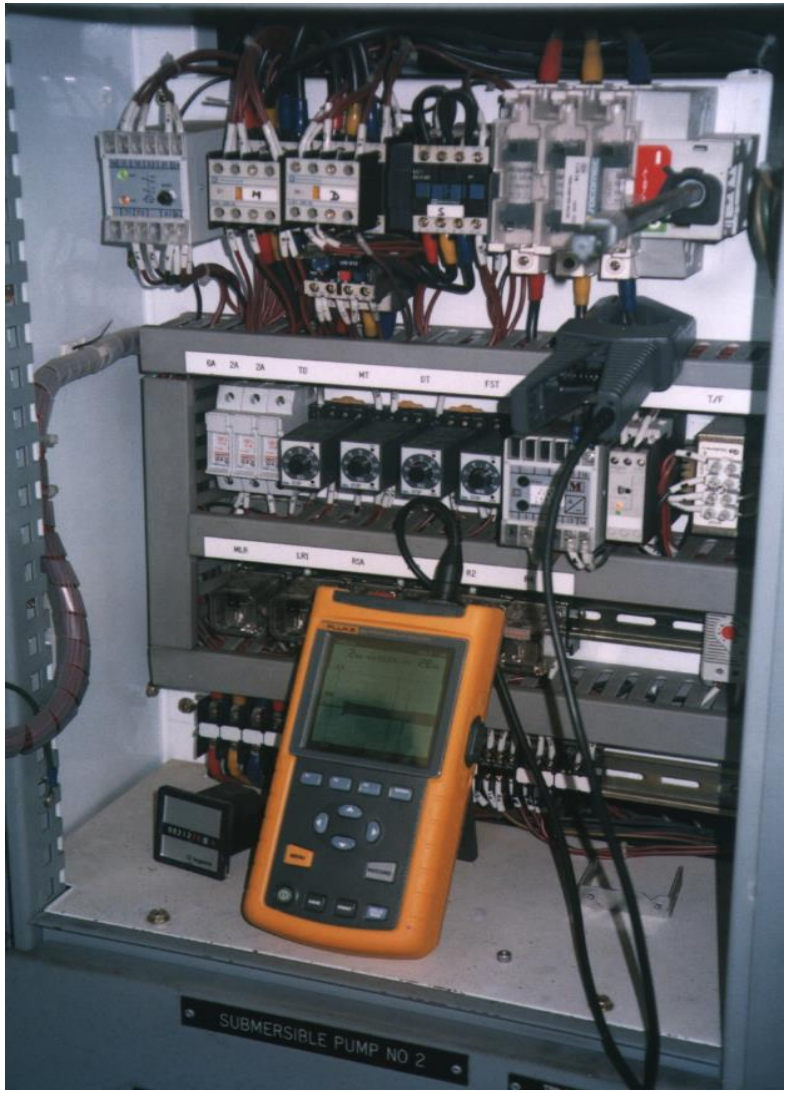

Confidential Property of Schneider Electric

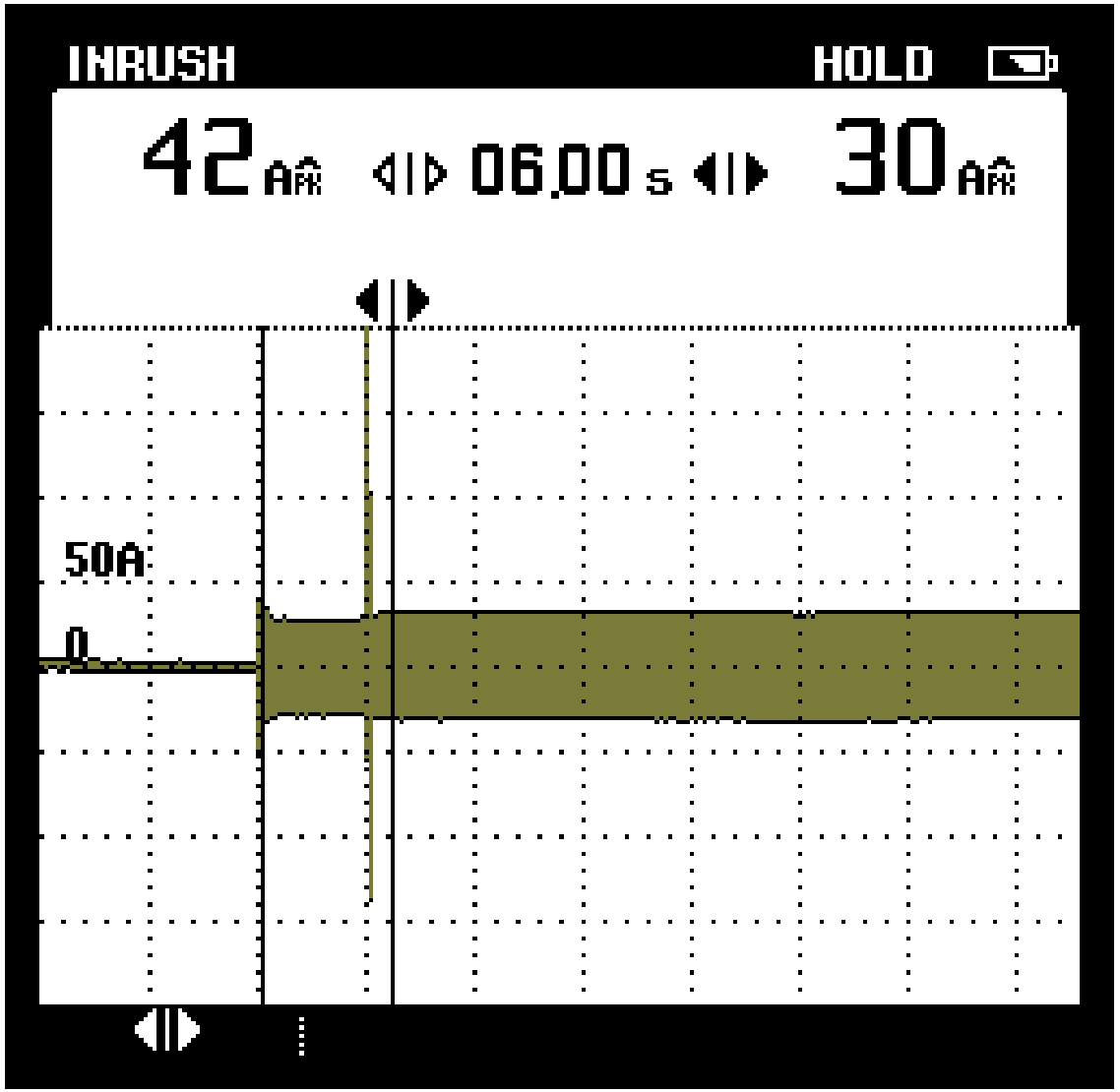

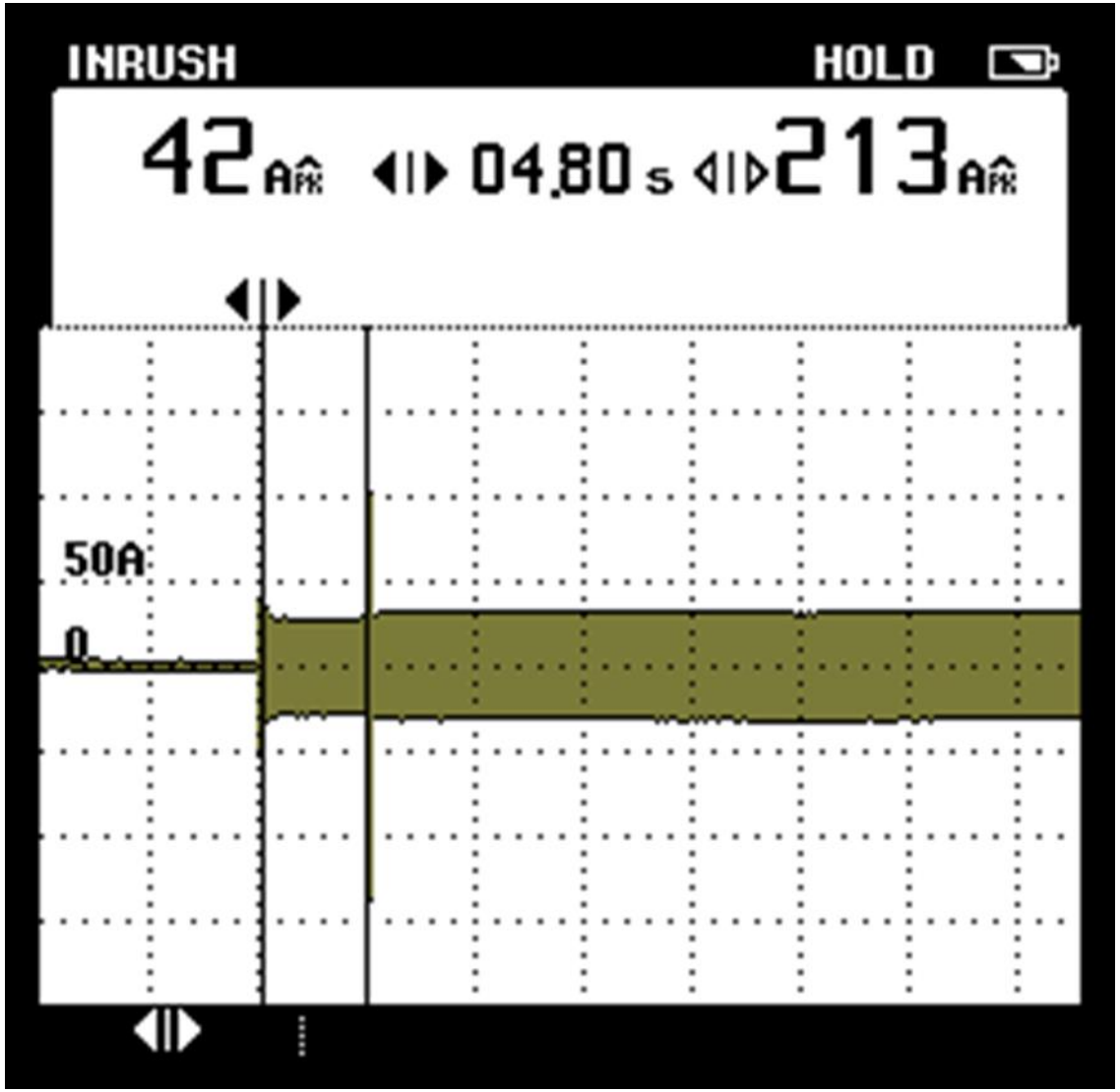

Confidential Property of Schneider Electric

Star / Delta starting current plot for 15 kW water pump at **Woodland Sump Station**

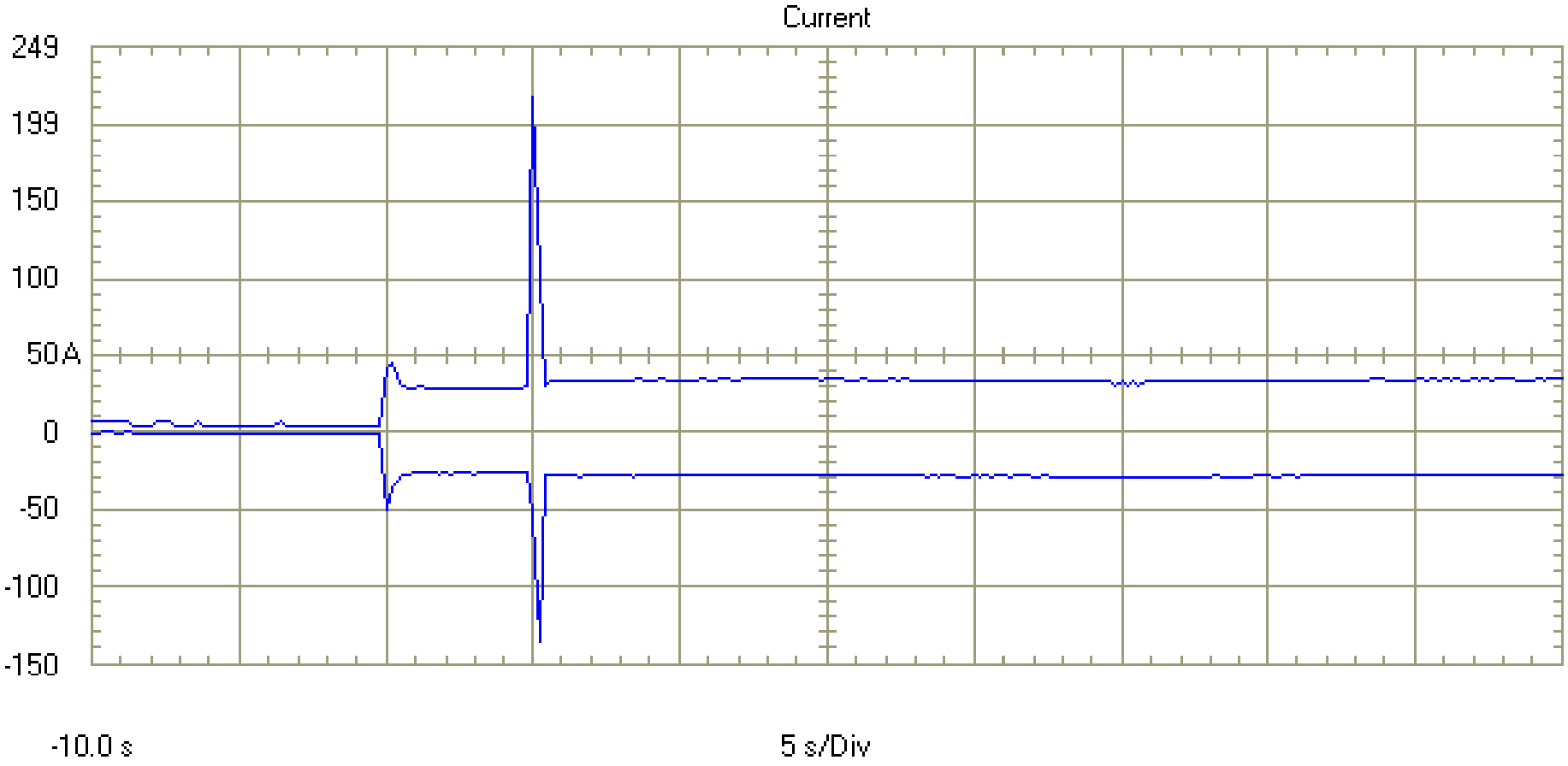

Confidential Property of Schneider Electric

Selection – Star-Delta Starter

- Utilisation category AC-3
- KM2 (Main) and KM3 (Delta) rated for I_c (AC-3) ≈ 0.58 In motor*
- KM1 rated for I_c (AC-3) ≈ 1/3 I_n motor

  (withstanding starting currents : 20 seconds or 2 successive starts of 10 seconds)
- Thermal overload relay set to 0.58 In motor
- Star time delay to be correctly adjusted.

* **In certain cases the contactors can be under-rated if their making capacity breaking capacity allow this, with regard to current**

$$\frac{I_{n\ motor}}{\sqrt{3}}$$

Closed Transition Star-Delta

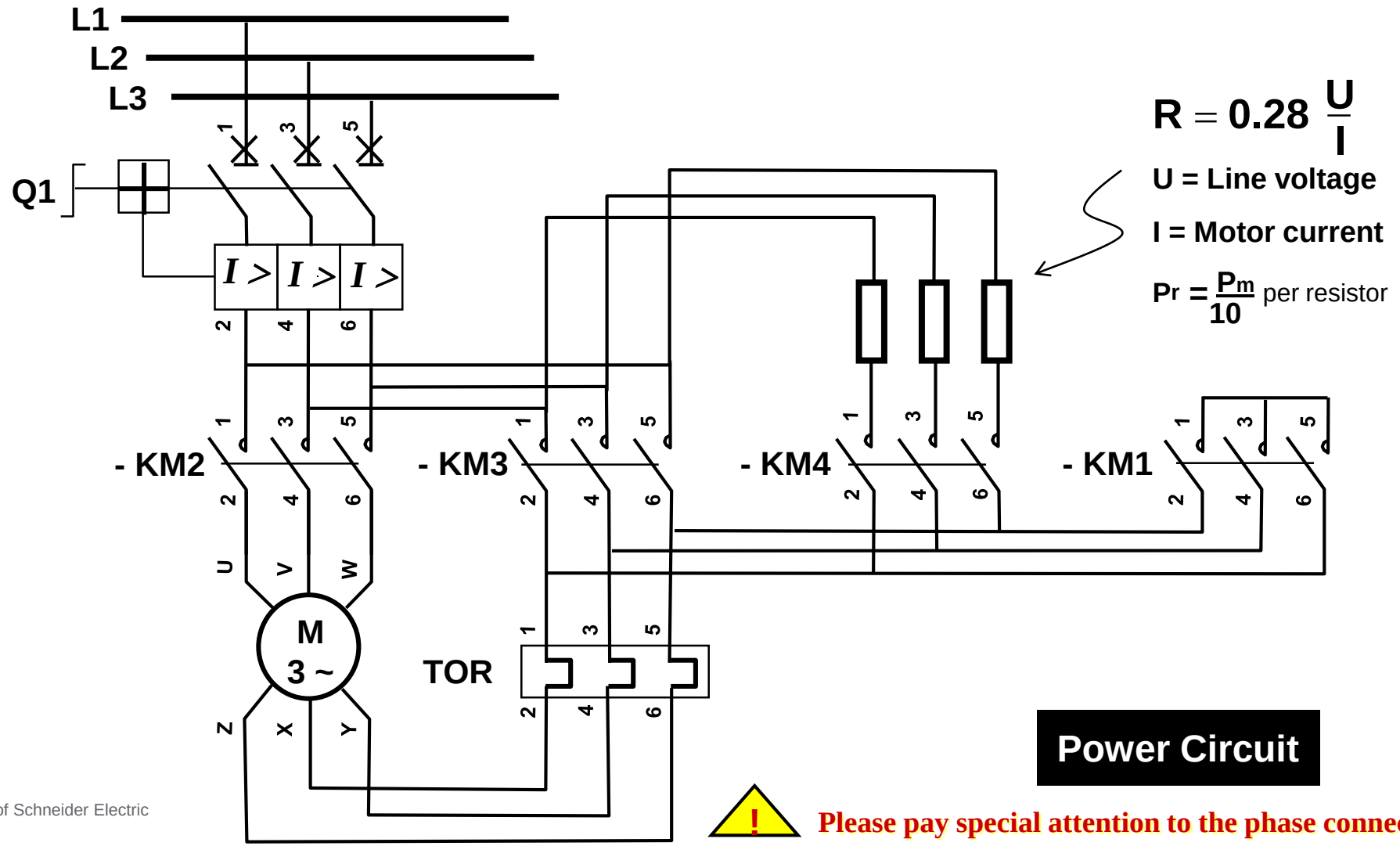

Power Circuit

! **Please pay special attention to the phase connection**

Confidential Property of Schneider Electric

Closed Transition Star-Delta

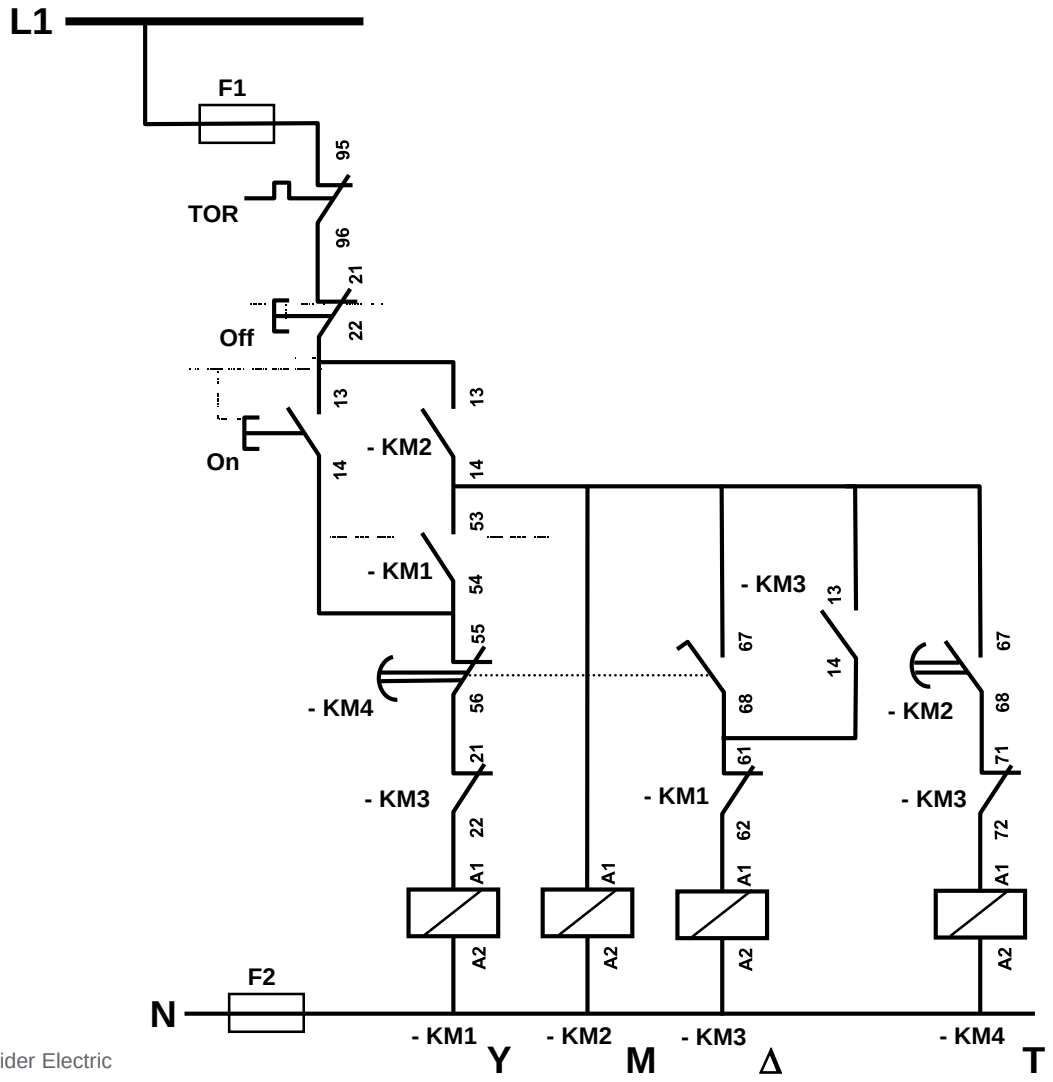

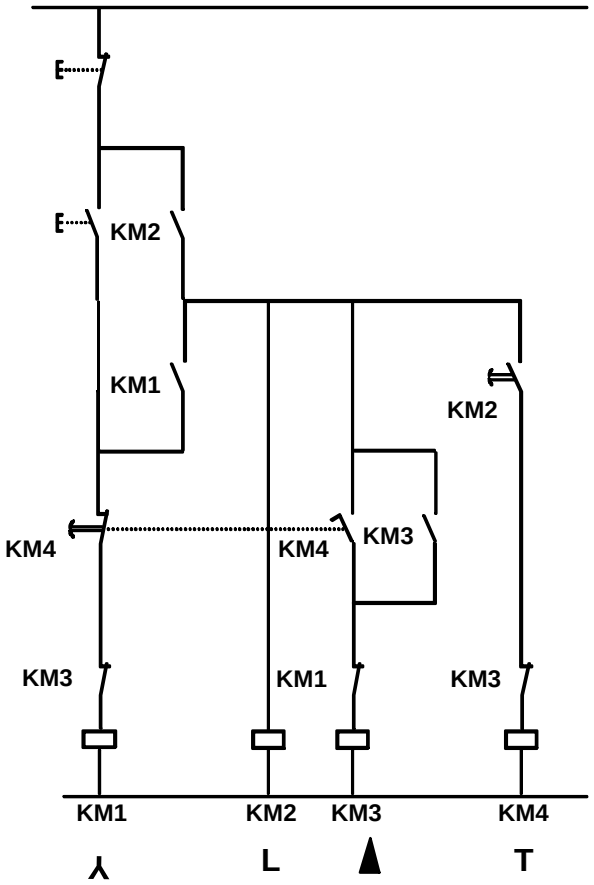

Control Circuit

Primary Resistance Starting

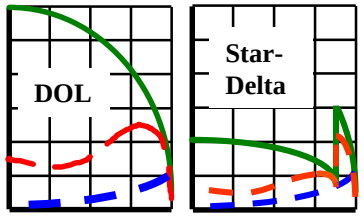

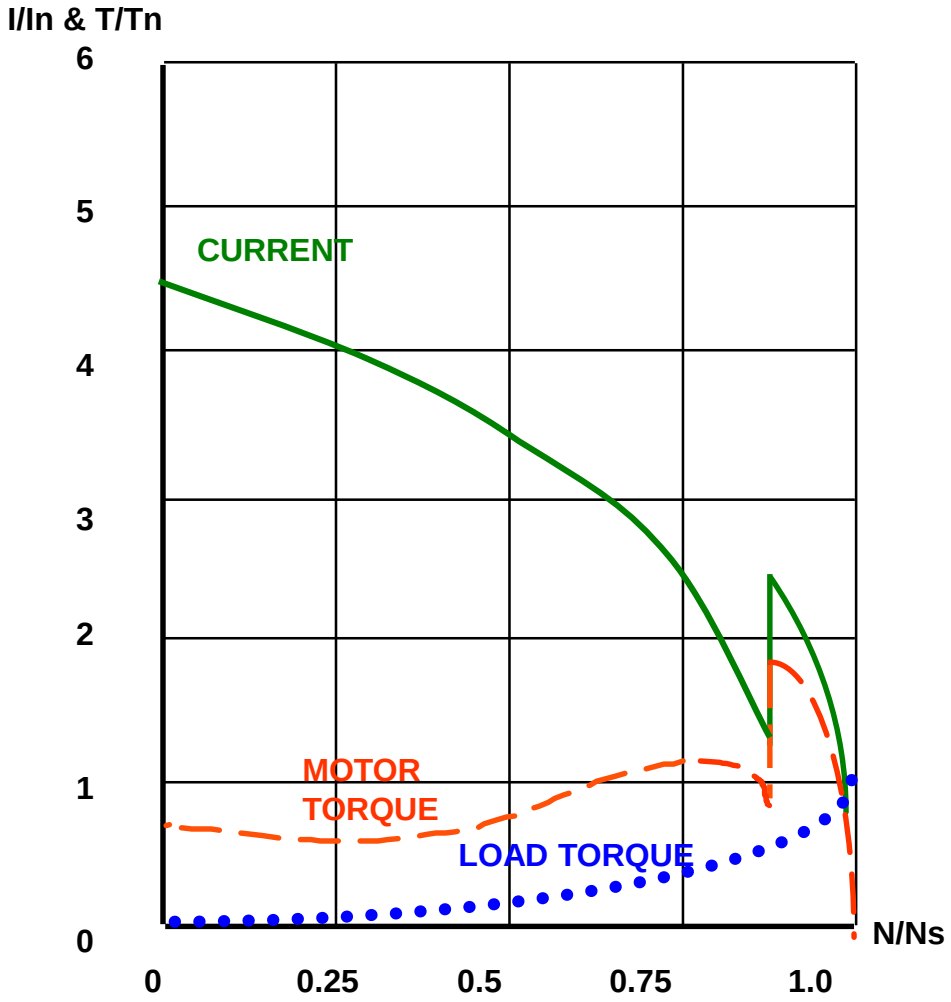

Starting CURRENT (Peak I) :
- 4.5 times nominal current

Starting TORQUE (Peak T) :
- 0.75 times nominal torque

Advantages :
- motor starting at reduced voltage
- reduced peak current

Disadvantages :
- resistor creates heat
- high cost due to resistor

Confined to applications where :
- 3 terminals motor

No parameter adjustment

Confidential Property of Schneider Electric

Auto-transformer Starting

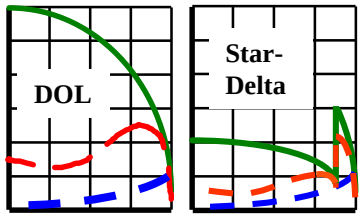

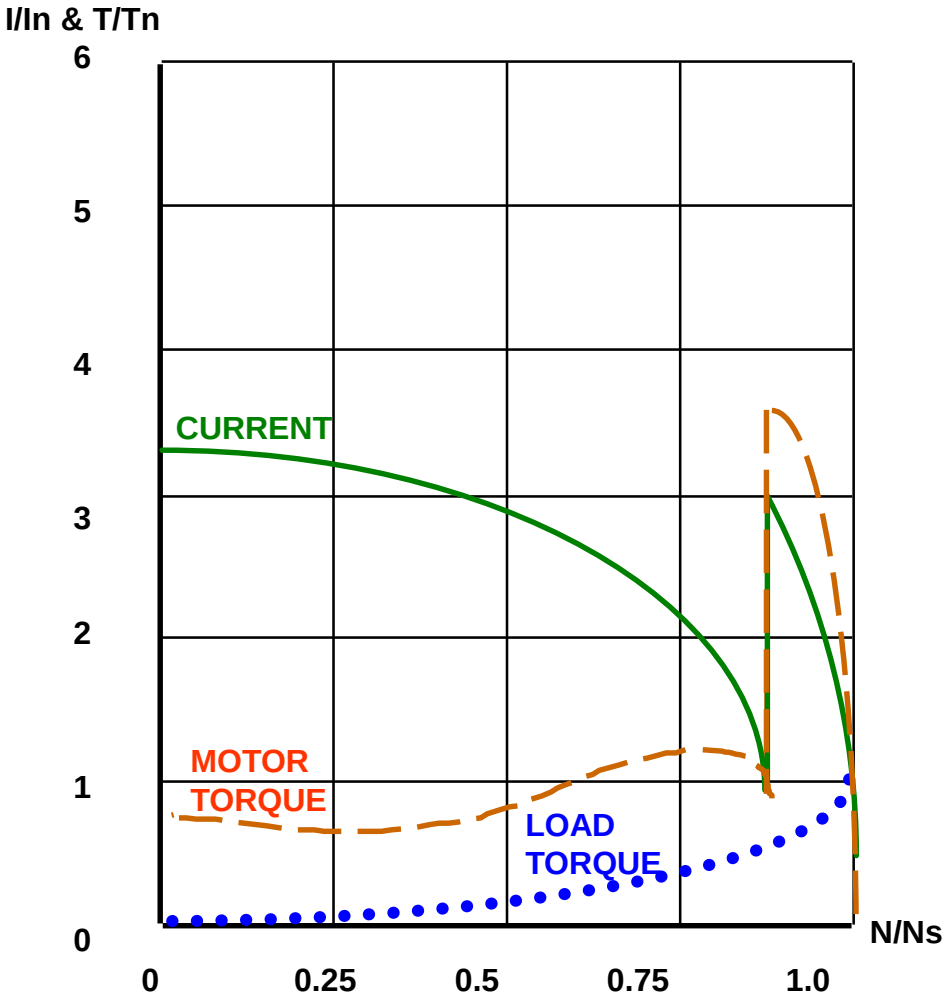

Starting CURRENT (Peak I) :
- 1.7 to 4 times nominal current

Starting TORQUE (Peak T) :
- 0.5 to 0.85 times nominal torque

Advantages :
- motor starting at reduced voltage
- reduced peak current

Disadvantages :
- limited nos of start
- expensive due to the cost of Auto-transformer itself

Confined to applications where :
- 3 terminals high power motor

Limited parameters for adjustment

Confidential Property of Schneider Electric

Electronic Soft-Starter Starting

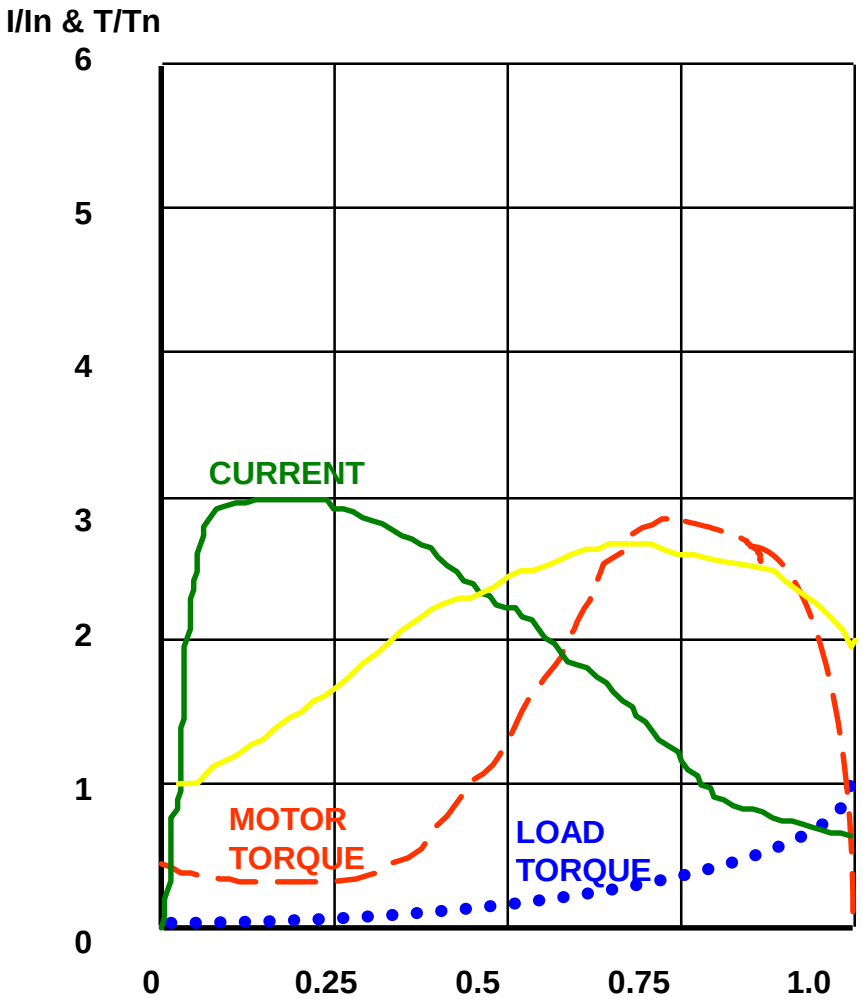

Starting CURRENT (Peak I) :

- adjustable from 2 to 5 times nominal current

Starting TORQUE (Peak T) :

- variable from 0.15 times to full nominal torque

Advantages :

- smooth, steady acceleration
- mechanical protection by eliminating sudden changes in peak current and thus torque during starting and stopping
- thermal overload for itself and motor being controlled
- equipment needs no maintenance
- deceleration control possible

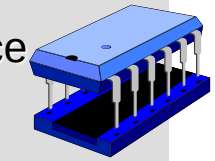

Disadvantages :

- high cost

Confined to applications where :

- 3 terminals high power motor

Parameters can be adjusted

Confidential Property of Schneider Electric

Sweet Torque Soft-Starter

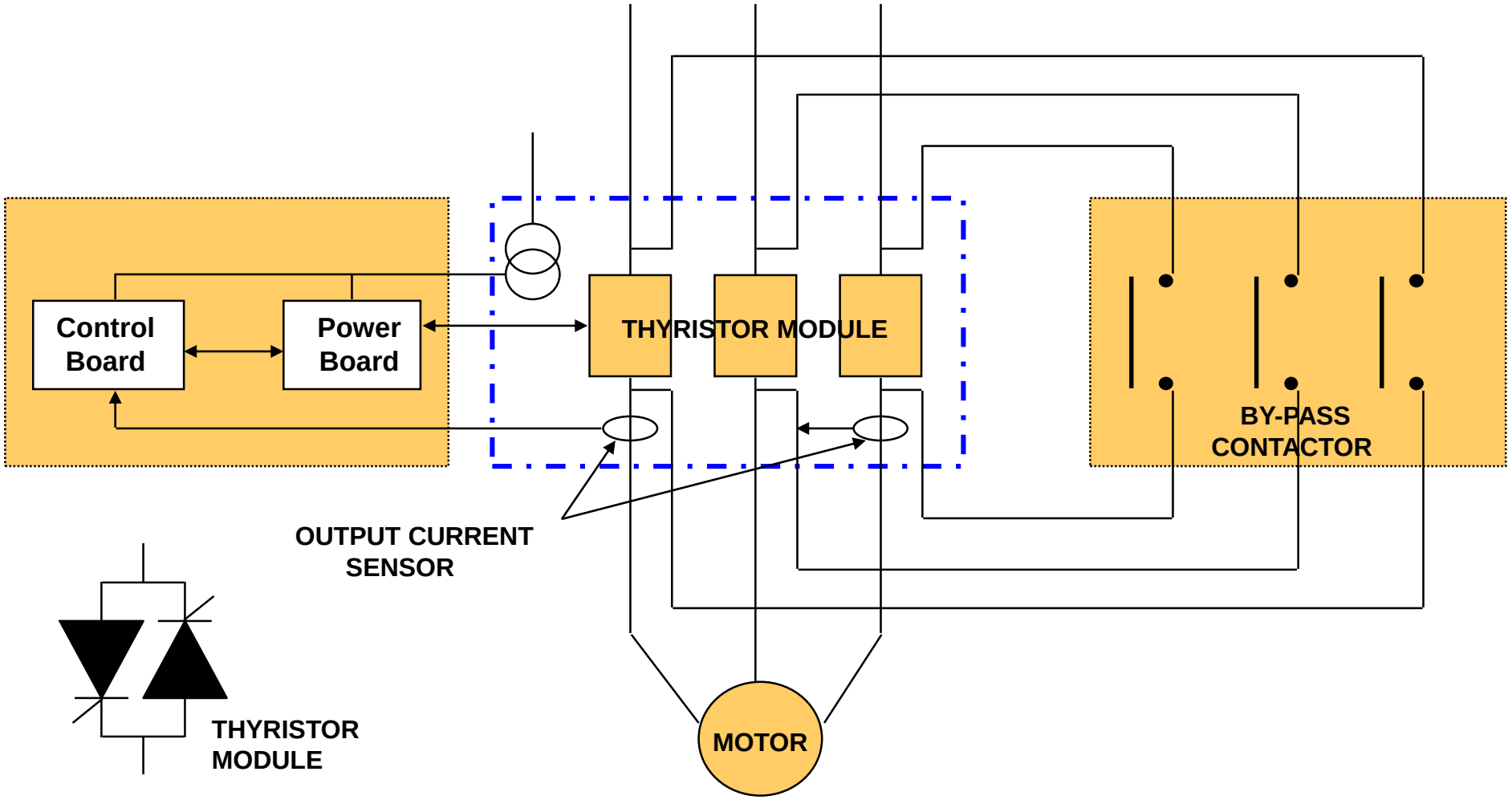

Confidential Property of Schneider Electric

Motor Starters Comparison

Motor starting method	Advantage	Disadvantage	Cost	Performance	Starting Current	Starting Torque
DOL	- high torque - simple straight forward	high surge current	low cost 1X	Good	6 - 8X	>1X
Star/Delta	- low starting current - relative simple	- high surge on transition - 6 wire open transition, 4-5 X 1_n	relatively low cost 2.5X	relatively good	2 - 3X	<0.5X
Auto Trans	high torque with low starting current	- bulky installation - not for frequent starting	expensive 6X	high pwer high inertia	3 - 4X	≤ 0.7X
Close Trans	no surge current	- need a set of resistor - resistor cause heating	expensive 4.5X	better than Star/Delta	2 - 3X	<0.5X
Primary R	close transition relatively simple	limited number of starting	expensive 4X	good for on-load application, eg. Pump	3.5 - 4.5X	≈0.7X
Soft Starter	smooth starting adjustable starting current/torque	relative complex	quite expensive 8X	very good	2 - 5X	0.5 - 1X
Slip Ring	very high torque	high maintenance complex	very expensive 15X	very good for certain application	≈ 2X	>3X

Confidential Property of Schneider Electric

3. Motor Protection

Current Protection

> Trip class
  > Class 5, 10, 20, 30, 40

> Thermal Overload Relay
  > Size by operational current and tripping class

> Short Circuit Protection
  > Handled by SCPD for I > 10x Ie

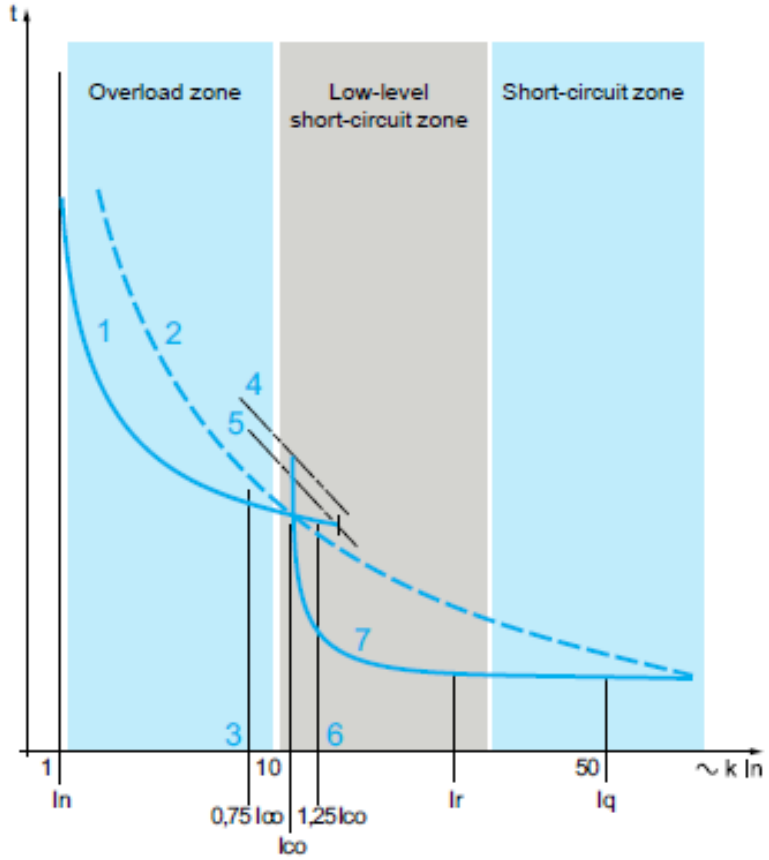

1 Thermal overload relay curve.
2 Fuse.
3 Tripping of thermal overload relay only.
4 Thermal limit of the circuit-breaker.
5 Thermal overload relay limit.
6 Current broken by the SCPD *(1)*.
7 Circuit breaker magnetic trip.

Confidential Property of Schneider Electric

Trip Class

> Measured at tripping current setting of 7.2 times of operational current

Table 2 – Trip classes of overload relays

Trip class	Tripping time T_p under the conditions specified in 8.2.1.5.1, Table 3, column D [a]	Tripping time T_p under the conditions specified in 8.2.1.5.1, Table 3, column D for tighter tolerances (tolerance band E) [a]
	s	s
2	–	$T_p \leq 2$
3	–	$2 < T_p \leq 3$
5	$0{,}5 < T_p \leq 5$	$3 < T_p \leq 5$
10A	$2 < T_p \leq 10$	–
10	$4 < T_p \leq 10$	$5 < T_p \leq 10$
20	$6 < T_p \leq 20$	$10 < T_p \leq 20$
30	$9 < T_p \leq 30$	$20 < T_p \leq 30$
40	–	$30 < T_p \leq 40$

Confidential Property of Schneider Electric

Definition of Coordination

The principle:

An O/L (1~10x FLC) or S/C (>10x FLC)

the starter should be able to clear the fault current QUICK, WITHOUT any damage to installation / risk to personnel

The Objective:

When over-current (O/L , S/C) is encountered :

- ***Protection for personnel and equipment***
- ***Reduce maintenance costs***
  - ***repair time***
  - ***equipment replacement costs***

Confidential Property of Schneider Electric

What is a coordinated starter?

Optimum Combination :

- ***Short circuit protective device***
- ***Contactor***
- ***Thermal Overload Relay***

Level of Coordination :

For a given motor starter depends entirely on :

- ***The electrical environment***
- ***The selection of the motor starter component***

Confidential Property of Schneider Electric

Coordination of the Protection devices (Coordination Standard IEC 947)

> Priority to the Protection for PERSONNEL & PROPERTY:

  > No fire hazard

> Equipment Maintenance :

  > Limit the risk of damage at the starter

> Reduce Downtime :

  > Continuity of service for increase productivity

Confidential Property of Schneider Electric

No Coordination

> In case of short circuit …
> HIGH RISK for operators
> HIGH RISK for the installation and
> All motor starter components will have to be replaced before restarting



No Coordination means

HIGH DANGER

Confidential Property of Schneider Electric

3 Levels of Coordination IEC 947

> Type 1 Coordination (IEC 947- 4 -1)

> Type 2 Coordination (IEC 947- 4 - 1)

> Total Coordination (IEC 947- 6 - 2)

Confidential Property of Schneider Electric

Type 1 Coordination (IEC947-4-1)
In case of short circuit

- ***NO danger to persons or installation***
- ***Contactor and/or Thermal Overload Relay might be damaged***
- ***Before restarting, the starter may need to be repaired***

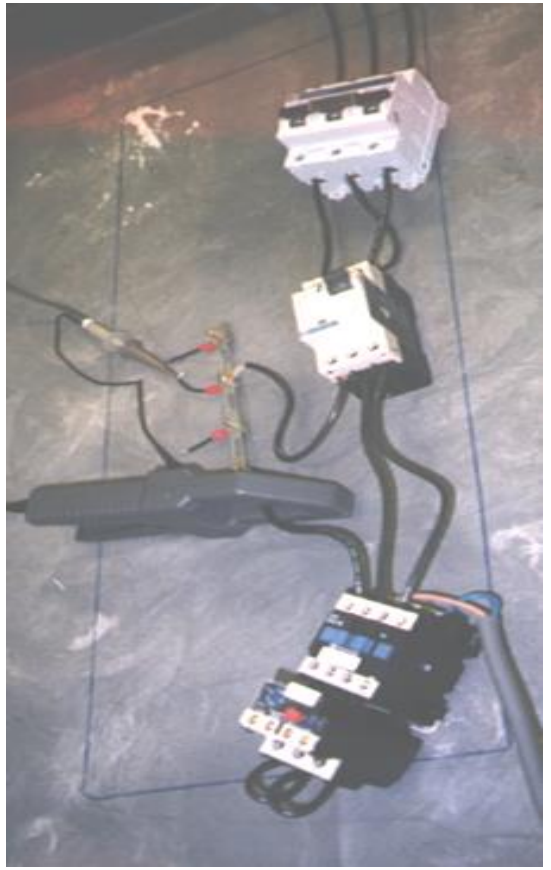

Type 2 Coordination (IEC947-4-1)
In case of short circuit



- ***NO* Danger to persons or installation**
- ***NO* damage to starter is allowed**

  Only minor welding of the contactor or starter contacts is permissible <u>AND</u> the contacts must be easily separated
- ***No readjust to the starter setting***
- ***Electrical insulation must be retained after the incident and motor starter <u>MUST</u> be able to operate***
- ***Before restarting, a simple check is sufficient***

Confidential Property of Schneider Electric

Total Coordination (IEC947-4-1)
In case of short circuit

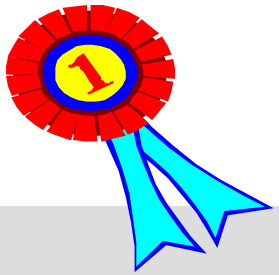

- ***NO** danger to persons or installation*
- ***NO** damage to starter **AND** contactor contact welding is NOT allowed*
- ***Electrical Insulation **MUST** be maintained***
- ***Immediate restarting **WITHOUT** inspection of starter***

Confidential Property of Schneider Electric

Coordination - reminder

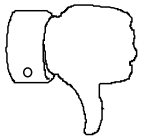

- ***NO* Coordination**



- ***TYPE 1* Coordination**



- ***TYPE 2* Coordination**

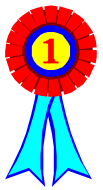

- ***TOTAL* Coordination**

Confidential Property of Schneider Electric

Motor starter solution from Schneider

- ***2 Types of Performance***
  - ***Standards starters (Type 1 coordination)***
  - ***High performance starter (Type 2 & Total coordination)***
- ***Easy to select according to application***
  - ***selection tables in Telemecanique "Motor starter solutions, Control and protection components" catalogue***
- ***All associations have been fully tested according to IEC 947***



Total coordination	Type 1 and type 2 coordination



Thank you!

©2014 Schneider Electric. All Rights Reserved.
All trademarks are owned by Schneider Electric Industries SAS or its affiliated companies or their respective owners.