Data Sheet

Shuttle® Level Transmitter / Controller / Indicator

3-in-1 package that is simple to install and use.
With expanded ranges and improved chemical resistance.

2.1



As our products are continuously improved, we reserve the right
to make any change in the stated specifications and dimensions without prior notice.

Data Sheet

Shuttle® Level Transmitter / Controller / Indicator

General



Shuttle® is an advanced micro-processor based ultrasonic level meter with an intelligent and very precise measuring system utilizing the newest hardware and software technologies.
Shuttle® provides simple and logical operation, using advanced technology resulting in a high quality product at a competitive price.

Features

Shuttle® is designed to measure water levels as well as other fluids and aggressive media, where the ultrasonic sensor is not in contact with the media.

- Ultrasonic measuring system with 3 sensors measuring ranges from from 0 - 4 in. to 80 ft.
- *Learning*-function allows the *Shuttle*® Level Transmitter to learn how the tank is arranged with piping, pumps and other items that might interfere with the measurement. The system also ignores turbulence and electrical interference, so even a slow moving mixer can pass through the ultrasonic beam without any influence on the measurement.
- 2 output relays for level / system alarm or alternating pump control with duty and standby cycles.
- 4 - 20 mA output with zero and span adjustment.
- Indication of the strength of the echo signal with a bar graph.
- Very narrow ultrasonic pulse signal concentrates signal strength for minimum sensitivity to foam and sludge on the surface of the liquid.
- Easy to read LCD-display for both setup and indication. Actual level is indicated with both a bar graph and with digits in millimeters, centimetres, metres, feet and inches. The digital readout can be chosen as either relative level or absolute level.
- 10 - 30 V DC or 115 V AC supply.
- FM approved sensors for hazardous areas.

Operation

Shuttle® is fully automatic after initial setup. 9 function buttons behind the front panel are used to configure:

- Unit selection in either feet, inches metres, centimetres and millimetres.
- Adjustment of zero level of the measurement and selection of relative or absolute reference.
- Zero and span for the mA-output.
- Function for the two 2 output relays - off, level alarm, system alarm or pump control with alternation.
- Learning function, so the level meter recognizes how the wetwell is arranged with pumps, piping and other elements so the measurement will not be affected by false echos.



Control functions

Shuttle® is equipped with 2 output relays which can be configured for level or pump control, system alarm or level alarm. The relay function can be set to either NO or NC function with an optional delay function. The relays can be used for start and stop of pumps with alternation.

Data Sheet

Shuttle® Level Transmitter / Controller / Indicator

Application

Shuttle® is well suited for any ultrasonic level measurement. The level transmitter may also be used for measuring and control of levels in tanks with contaminated and/or aggressive media. *Shuttle*® has 4 - 20 mA output increasing or decreasing with the level, where both zero level and span can be adjusted for the whole range of the sensor.

Typical applications are measurement and control in:

- stormflow tanks
- pump stations
- tanks in sewage treatment plants
- tanks in water plants
- tanks and vessels in process and food industries

Electrical connections

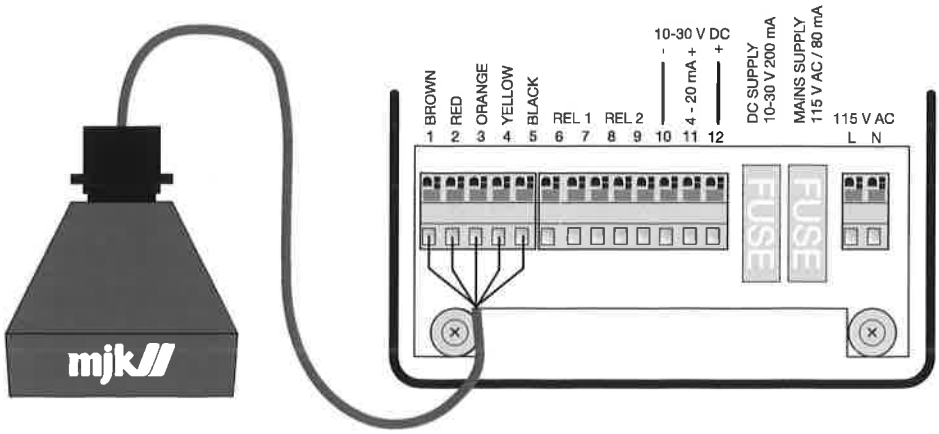

Ultrasonic Sensor

Shuttle® *Level Transmitter*

Specifications

Shuttle® Level Transmitter	
Range:	0 - 35 ft, 0 - 45 ft, 0 - 75 ft
Span:	From 0 - 4 in. to 0 - 75 ft
Power supply:	115 V AC ± 10 % 10 - 30 V DC
Consumption:	Approx. 2 W
Temperature:	- 5 to + 150 °F
Input:	From ultrasonic sensor
Accuracy:	± 0.2 %
Outputs:	Analog:4 - 20 mA, max.load 500 Ω. Digital:2 x relays with programmable NO/NC function. Max. 1 A resistive load @ 50 V.
Indication:	LCD display with 4 digits and symbols.
Operation:	Function keypad behind front panel.
Enclosure:	NEMA 4X
Approvals:	CE: EN 50081-1, EN 50082-1 UL: File E194021

Data Sheet

Shuttle® Ultrasonic sensors

Standard range version

Shuttle® Ultrasonic Sensor 200570 / 200771	
Range:	45 ft. (fluids) 15 ft. (solids)
Frequency:	30 kHz
Spread:	3 °
Deadband:	14 "
Temperature:	- 5 to + 150 °F
Materials:	PP, POM
Cable:	Shielded, oil resistant PVC insulation, length 39 ft. (Max. 300 ft. with 690010 cable.)
Enclosure:	NEMA 6P, watertight, withstands max. 30 ft submersion.
CE-approvals:	EN 50081-1, EN 50082-1

Standard range version

FM APPROVED

Shuttle® Ultrasonic Sensor: 200640 / 200641	
Range:	35 ft. (fluids), 15 ft. (solids)
Frequency:	40 kHz
Spread:	7 °
Deadband:	14 "
Temperature:	- 5 to + 150 °F
Materials:	PTB, Glass reinforced Epoxy
Cable 200640: Cable 200641:	Shielded, oil resistant PVC insulation, length 39 ft. Shielded, oil resistant PVC insulation, length 164 ft. (Max. 300 ft. with 690010 cable.)
Enclosure:	NEMA 6P, watertight, withstands max. 30 ft submersion.
CE-approvals:	EN 50081-1, EN 50082-1
Ex-approvals:	FM Class 1, Div. 1, Groups A-G

Extended range version

FM APPROVED

Shuttle® Ultrasonic Sensor: 200630 / 200631	
Range:	80 ft. (fluids), 30 ft. (solids)
Frequency:	30 kHz
Spread:	6 °
Deadband:	32 "
Temperature:	- 5 to + 150 °F
Materials:	PTB, Glass reinforced Epoxy
Cable 200630: Cable 200631:	Shielded, oil resistant PVC insulation, length 39 ft. Shielded, oil resistant PVC insulation, length 164 ft. (Max. 300 ft. with 690010 cable.)
Enclosure:	NEMA 6P, watertight, withstands max. 30 ft submersion.
CE-approvals:	EN 50081-1, EN 50082-1
Ex-approvals:	FM Class 1, Div. 1, Groups A-G

Chemical resistent version

Shuttle® Ultrasonic Sensor: 200660	
Range:	30 ft. (fluids), 15 ft. (solids)
Frequency:	50 kHz
Spread:	6 °
Deadband:	14 "
Temperature:	- 5 to + 150 °F
Materials:	PP, PVDF
Cable:	Shielded, oil resistant PVC insulation, length 39 ft. (Max. 300 ft. with 690010 cable.)
Enclosure:	NEMA 6P, watertight, withstands max. 30 ft. submersion.
CE-approvals:	EN 50081-1, EN 50082-1

Shuttle® Ultrasonic sensors

Standard range version



Ultrasonic sensor type 200570 / 200771	
Frequency:	30 KHz
Range:	Up to 45 ft. in fluids and 15 ft. in solids.
Directivity:	See figure below.

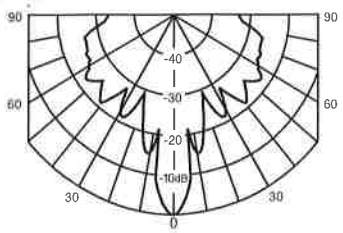

Standard range version

FM APPROVED



Ultrasonic sensor type 200640 / 200641	
Frequency:	40 KHz
Range:	Up to 35 ft. in fluids and 15 ft. in solids.
Directivity:	See figure below.

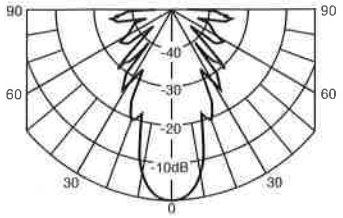

Extended range version

FM APPROVED



Ultrasonic sensor type 200630 / 200631	
Frequency:	30 KHz
Range:	Up to 80 ft. in fluids and 30 ft. in solids.
Directivity:	See figure below.

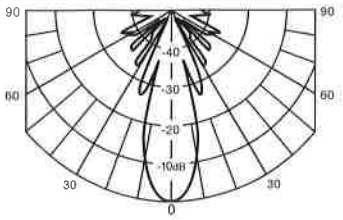

Chemical resistent version



Ultrasonic sensor type 200660	
Frequency:	50 KHz
Range:	Up to 30 ft. in fluids and 15 ft. in solids.
Directivity:	See figure below.

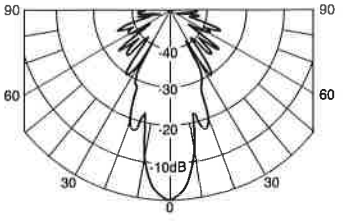

Data Sheet

Shuttle® Level Transmitter / Controller / Indicator

Dimensions

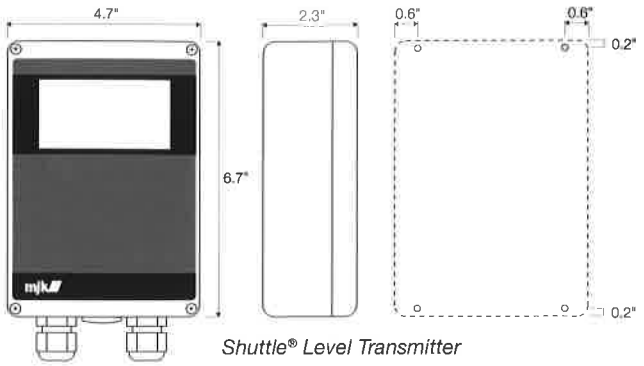

Shuttle® Level Transmitter

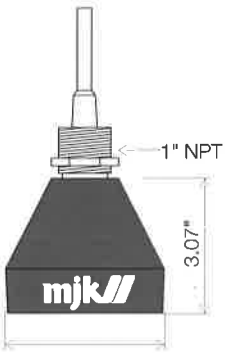

Dia. 4.06"
Ultrasonic sensor 200570 / 200660 / 200571

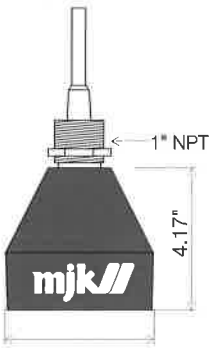

Dia. 4.06"
Ultrasonic sensor 200640 / 200630 / 200641 / 200631

Universal bracket

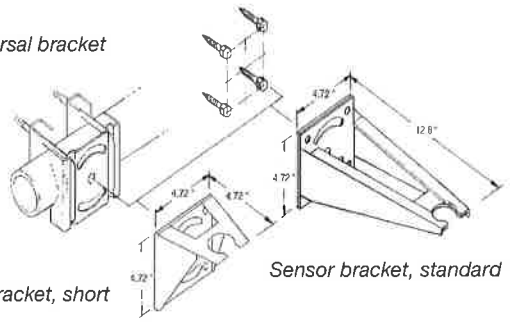

Sensor bracket, short

Sensor bracket, standard

Order numbers

Shuttle® Level Transmitter complete with Ultrasonic Sensor	
201209	Shuttle® Level Transmitter without sensor, power supply 115 / 230 V AC or 10 - 30 V DC
201214	Shuttle® Level Transmitter complete with Ultrasonic Sensor 200570 and 39 ft. of cable, power supply 115 / 230 V AC or 10 - 30 V DC
201224	Shuttle® Level Transmitter complete with Ultrasonic Sensor 200630 and 39 ft. of cable, power supply 115 / 230 V AC or 10 - 30 V DC
201234	Shuttle® Level Transmitter complete with Ultrasonic Sensor 200640 and 39 ft. of cable, power supply 115 / 230 V AC or 10 - 30 V DC
201244	Shuttle® Level Transmitter, complete with Shuttle® Ultrasonic Sensor 200660 and 39 ft. of cable, power supply 115 / 230 V AC or 10 - 30 V DC

Accessories	
200205	Universal bracket
200219	Short Sensor bracket for Ultrasonic Sensor
200220	Standard Sensor bracket for Ultrasonic Sensor
200590	Connection box for Ultrasonic Sensor cable
690010	Additional cable for Ultrasonic Sensor. Can be extended to 300 ft., specify length
200570	Ultrasonic Sensor, 30 kHz, 39 ft. of cable, range: 45 ft. in fluids, 15 ft. in solids
200571	Ultrasonic Sensor, 30 kHz, 150 ft. of cable, range: 45 ft. in fluids, 15 ft. in solids
200630	Ultrasonic Sensor, 30 kHz, 39 ft. of cable, range: 75 ft. in fluids, 30 ft. in solids
200631	Ultrasonic Sensor, 30 kHz, 150 ft. of cable, range: 75 ft. in fluids, 30 ft. in solids
200640	Ultrasonic Sensor, 40 kHz, 39 ft. of cable, range: 35 ft. in fluids, 15 ft. in solids
200641	Ultrasonic Sensor, 40 kHz, 150 ft. of cable, range: 35 ft. in fluids, 15 ft. in solids
200660	Ultrasonic sensor, 50 kHz, 39 ft. of cable, range: 30 ft. in fluids, 15 ft. in solids
840010	Shuttle® Communication Software for settings incl. Interface and RS 232 cable
840011	Shuttle® Communication Software for settings and Firmware, incl. Interface and RS 232 cable

Xylem Analytics Australasia
salesAus@xyleminc.com
www.xylem-analytics.com.au

Xylem Analytics Vietnam
analytics.vietnam@xyleminc.com
www.xylem-analytics.vn

Xylem Analytics South Asia
analytics.india@xyleminc.com
www.xylem-analytics.in

Xylem Analytics Asia Paci□ic
analytics.asia-pacific@xyleminc.com
www.xylem-analytics.asia

Xylem Analytics Japan
ysijapan.support@xyleminc.com
www.ysijapan.com