July 27, 2017

Welcome to Xylem CBS Seminar



WE UNDERSTAND PUMP TECHNOLOGY. FOR YOUR NEXT BUILDING PROJECT. SO YOU DON'T HAVE TO.

Large Chilled Water System Design Seminar

System Comparison

Two Pipe Direct Return

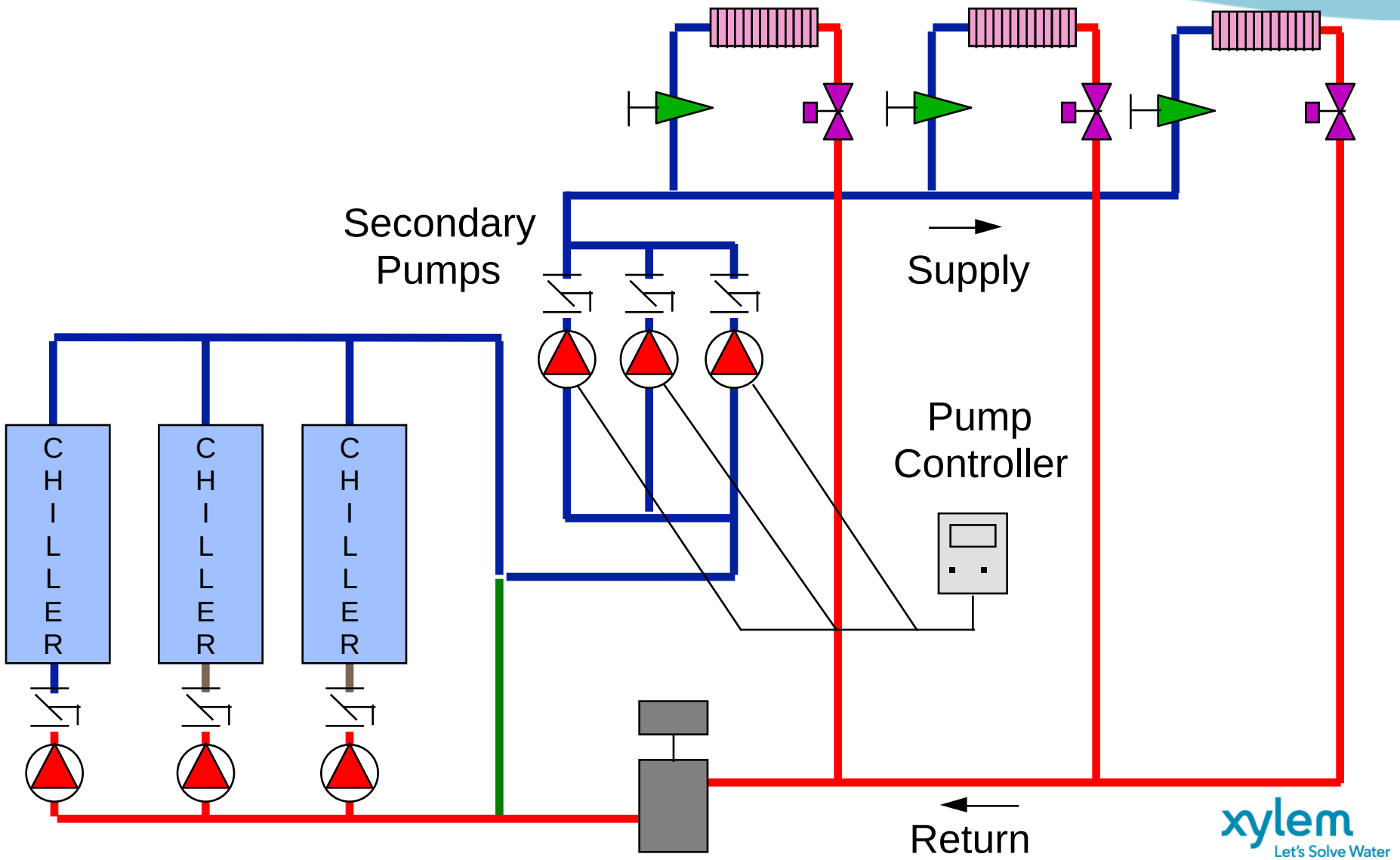

xylem
Let's Solve Water

Two Pipe Reverse Return

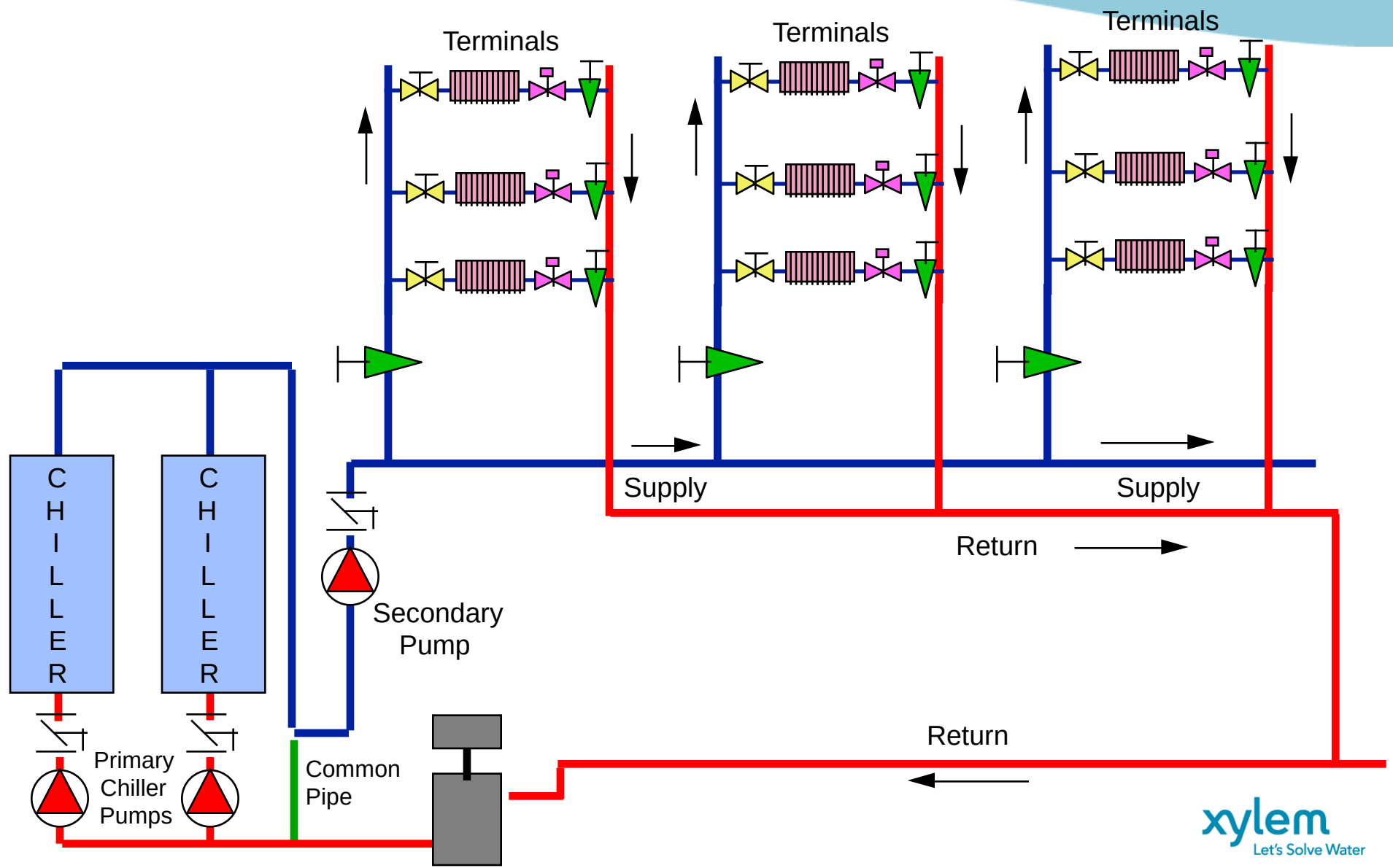

xylem
Let's Solve Water

Primary-Secondary Pumping

- Simplest to install.
- Simplest to operate.
- Flexible in design for present and future.
- Efficient to operate.

- May over-pressurize near zones.
- No thermal isolation.

xylem
Let's Solve Water

Primary-Secondary-Tertiary

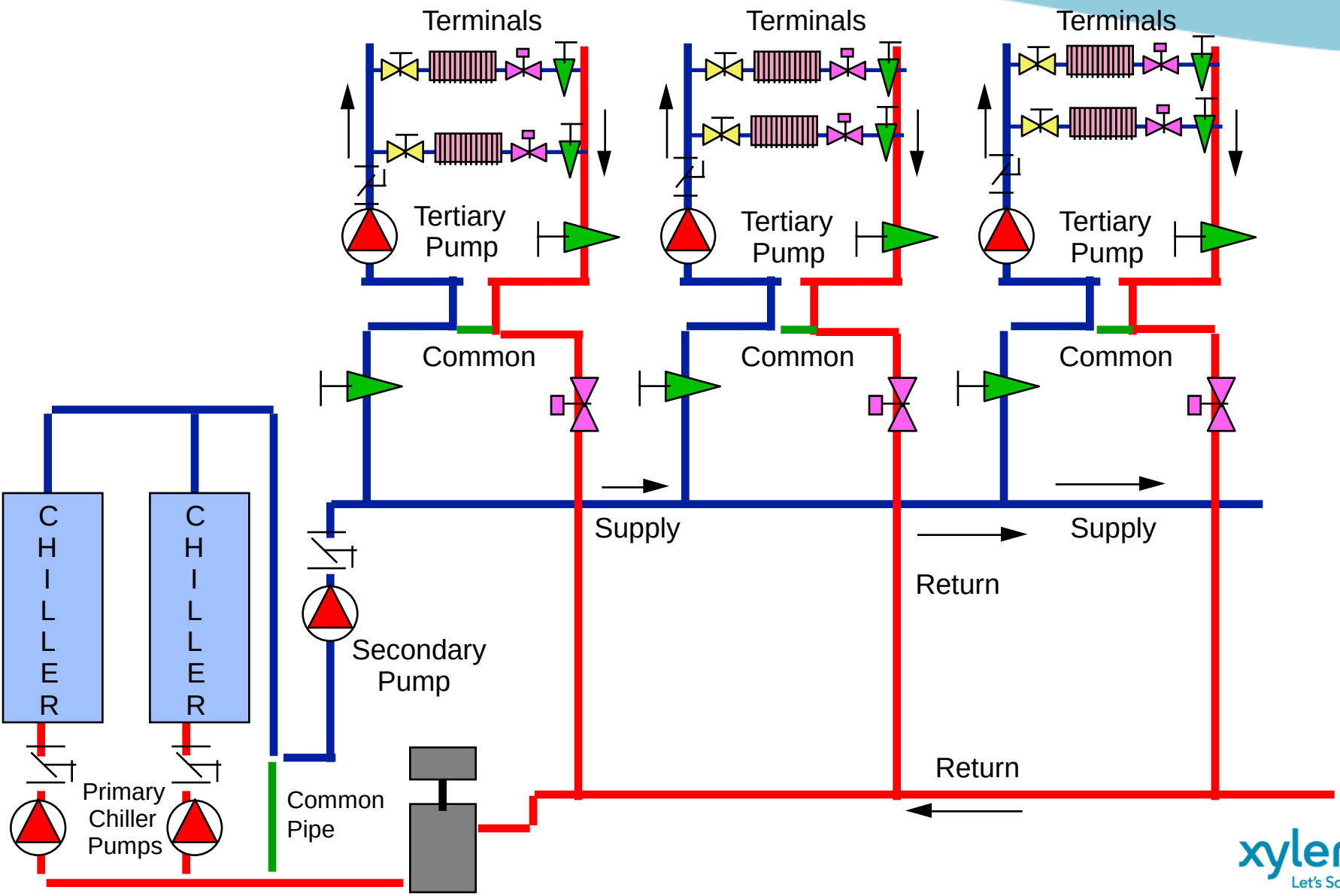

xylem
Let's Solve Water

Primary-Secondary-Tertiary Pumping

- Best piping flexibility.
- Best expansion flexibility.
- Provides hydraulic decoupling.
- Provides thermal decoupling.
- Efficient to operate.

- May require added horsepower.
- Requires additional pumps and piping.
- Increased controls complexity.

xylem
Let's Solve Water

Primary-Secondary-Tertiary Hybrid

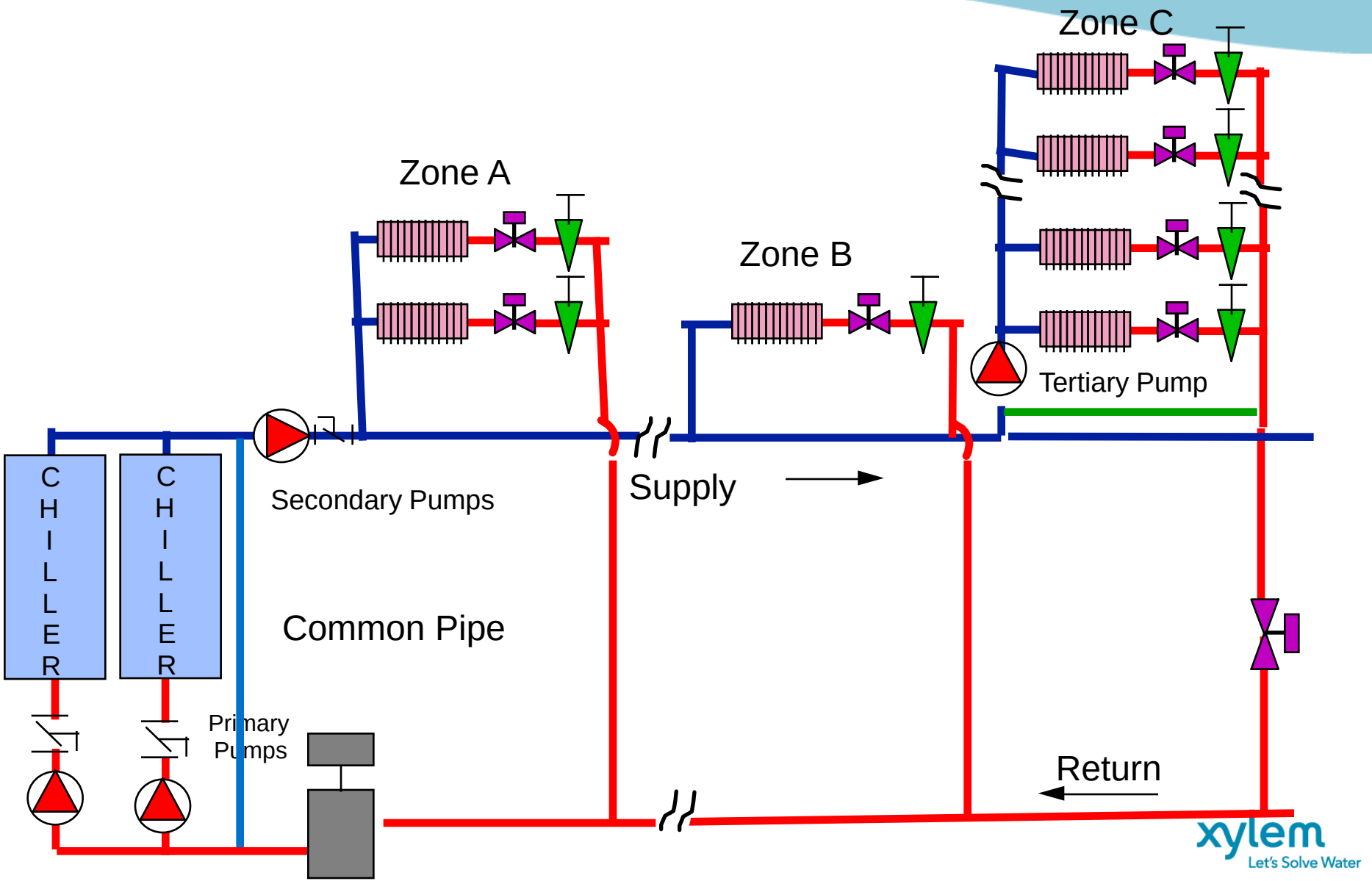

xylem
Let's Solve Water

C/S Parallel Pumps

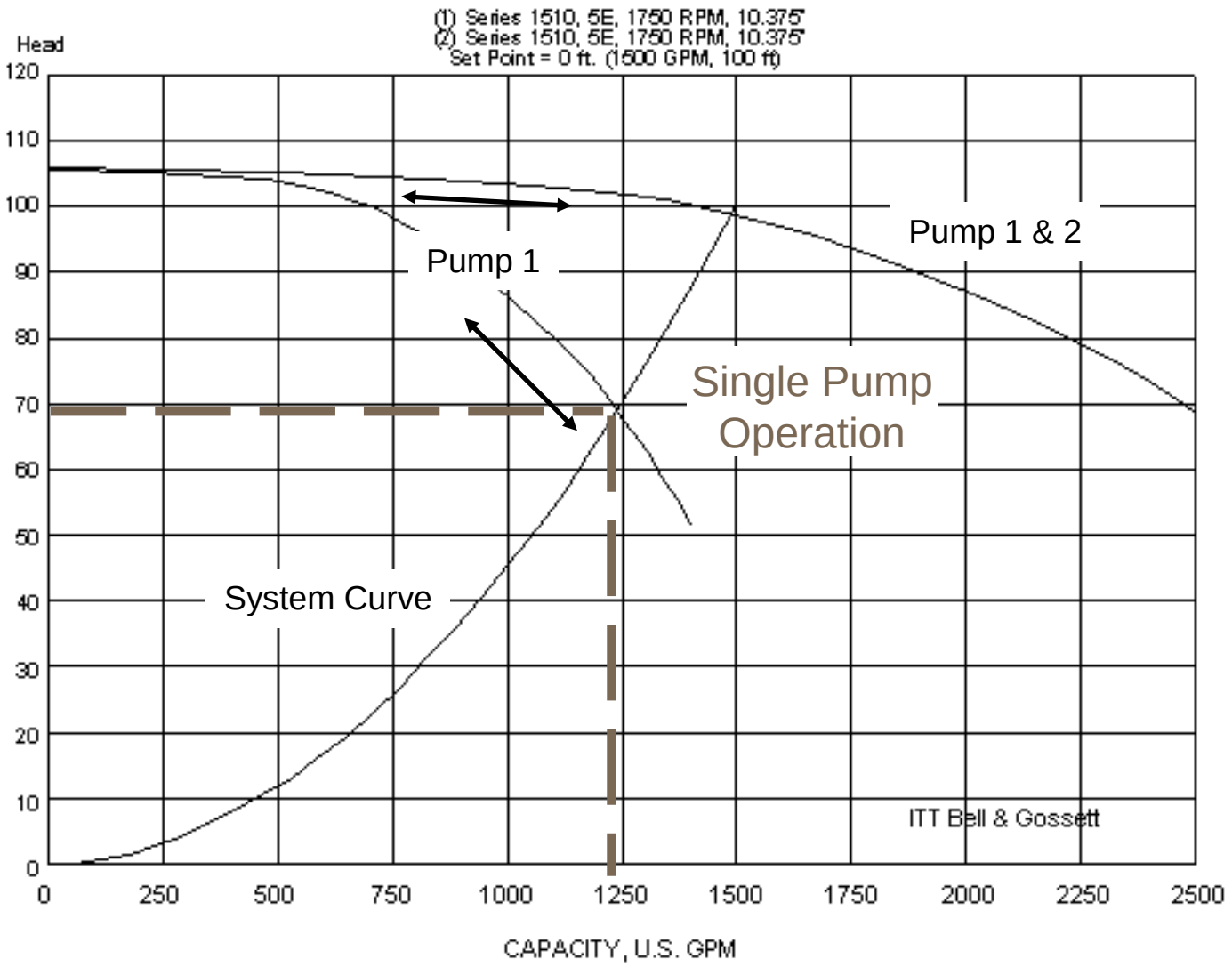

xylem
Let's Solve Water

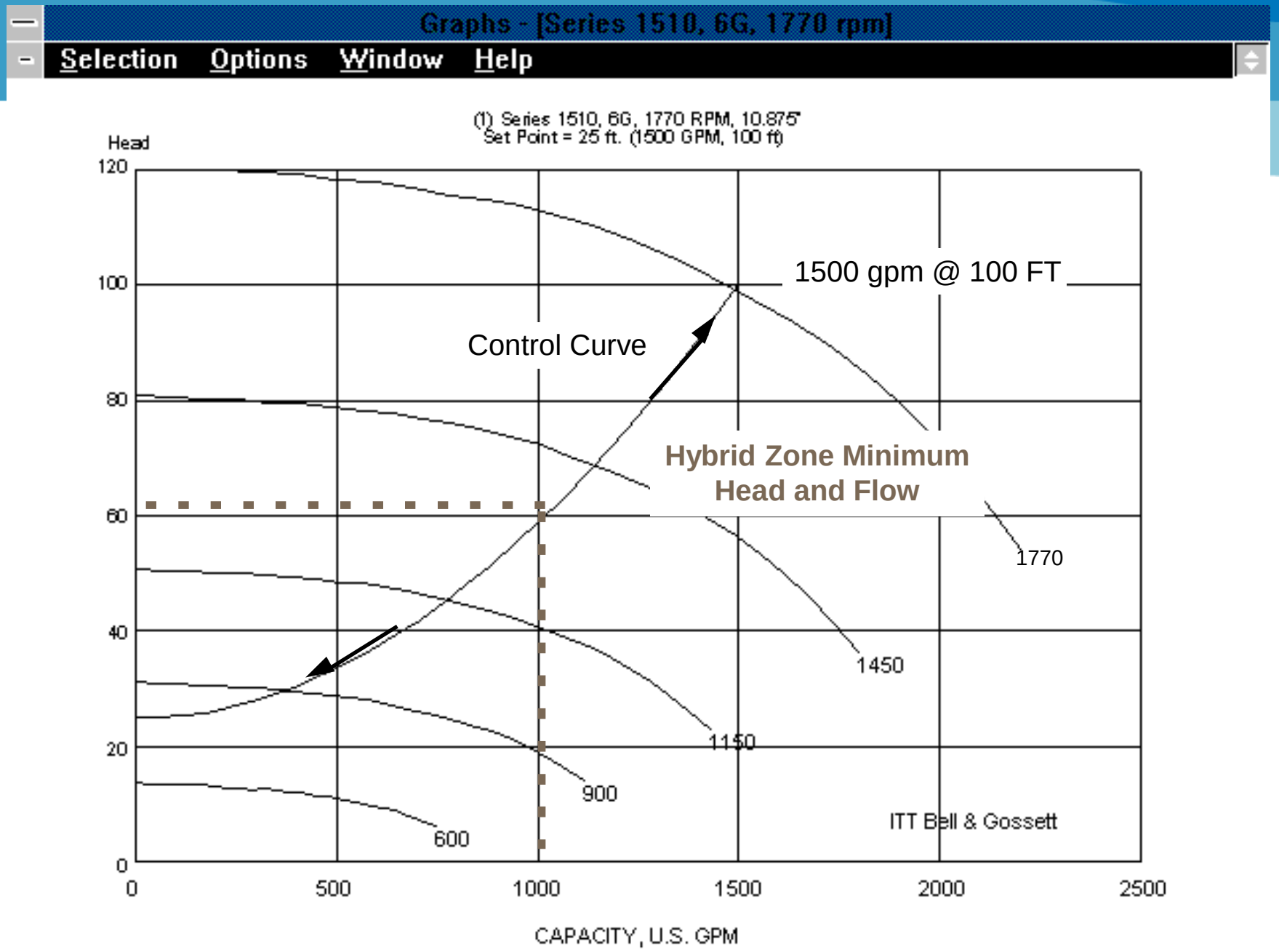

Let's Solve Water

Primary-Secondary-Tertiary Hybrid

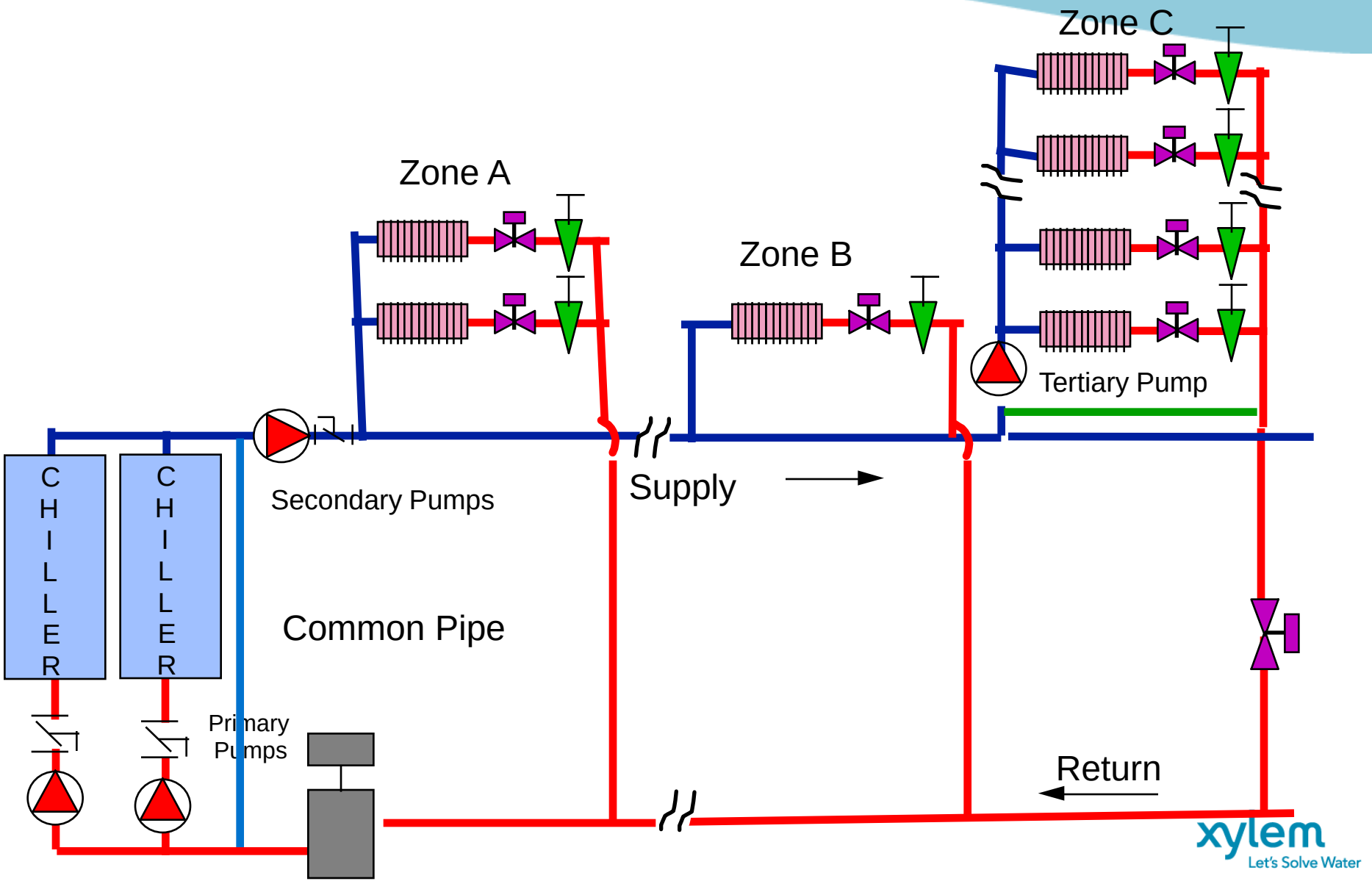

xylem
Let's Solve Water

Tertiary Pump Bypass Piping

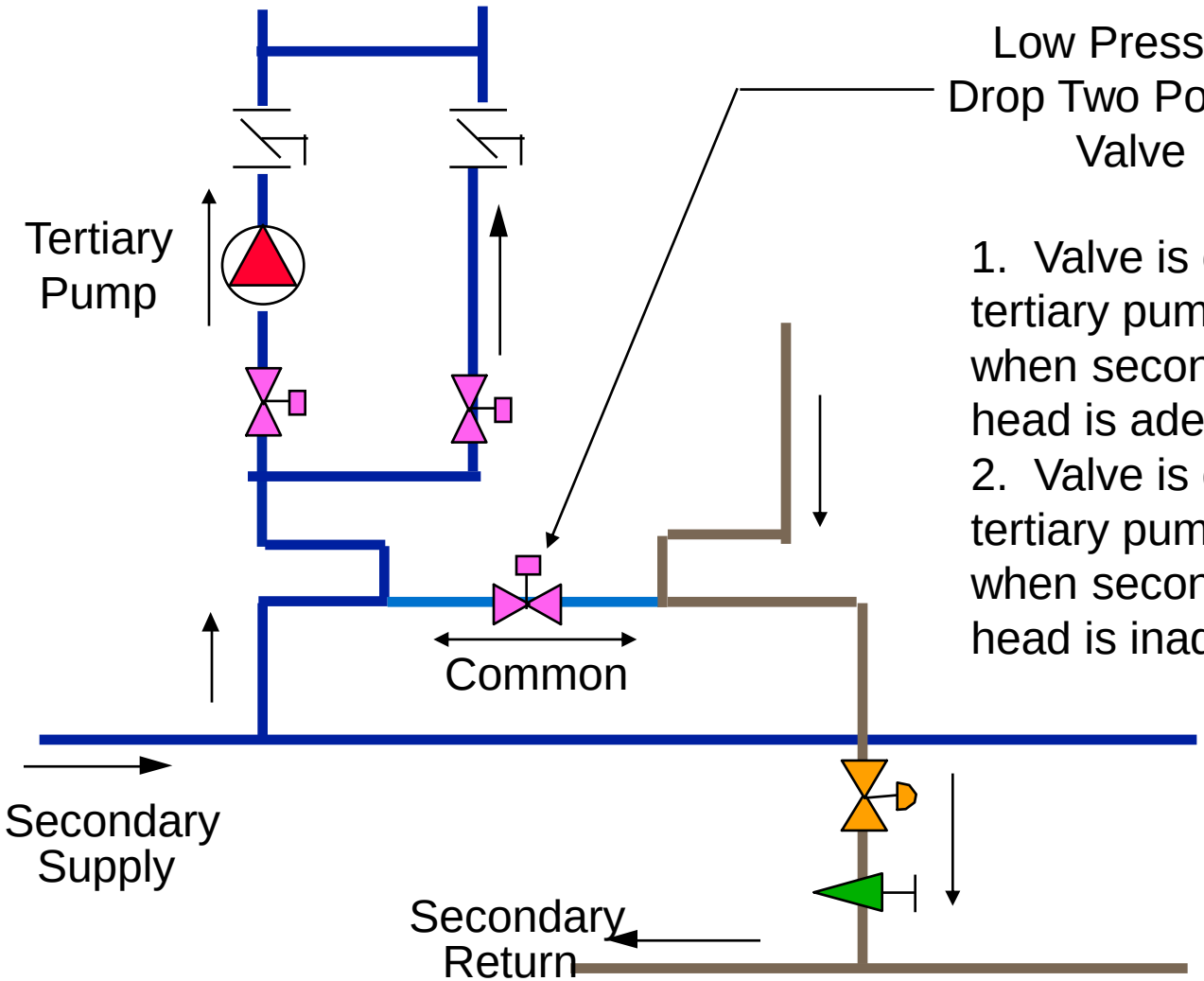

1. Valve is closed and tertiary pump is off when secondary pump head is adequate.
2. Valve is open and tertiary pump is on when secondary pump head is inadequate.

xylem
Let's Solve Water

Primary-Secondary-Tertiary Hybrid Pumping

- Low present horsepower.
- Low future horsepower.
- Good piping flexibility.
- Good expansion flexibility.
- Provides hydraulic decoupling.
- Provides thermal decoupling.

- May require added horsepower
- Requires additional pumps and piping.
- Increased controls complexity.

xylem
Let's Solve Water

Primary-Secondary Zone Pumping

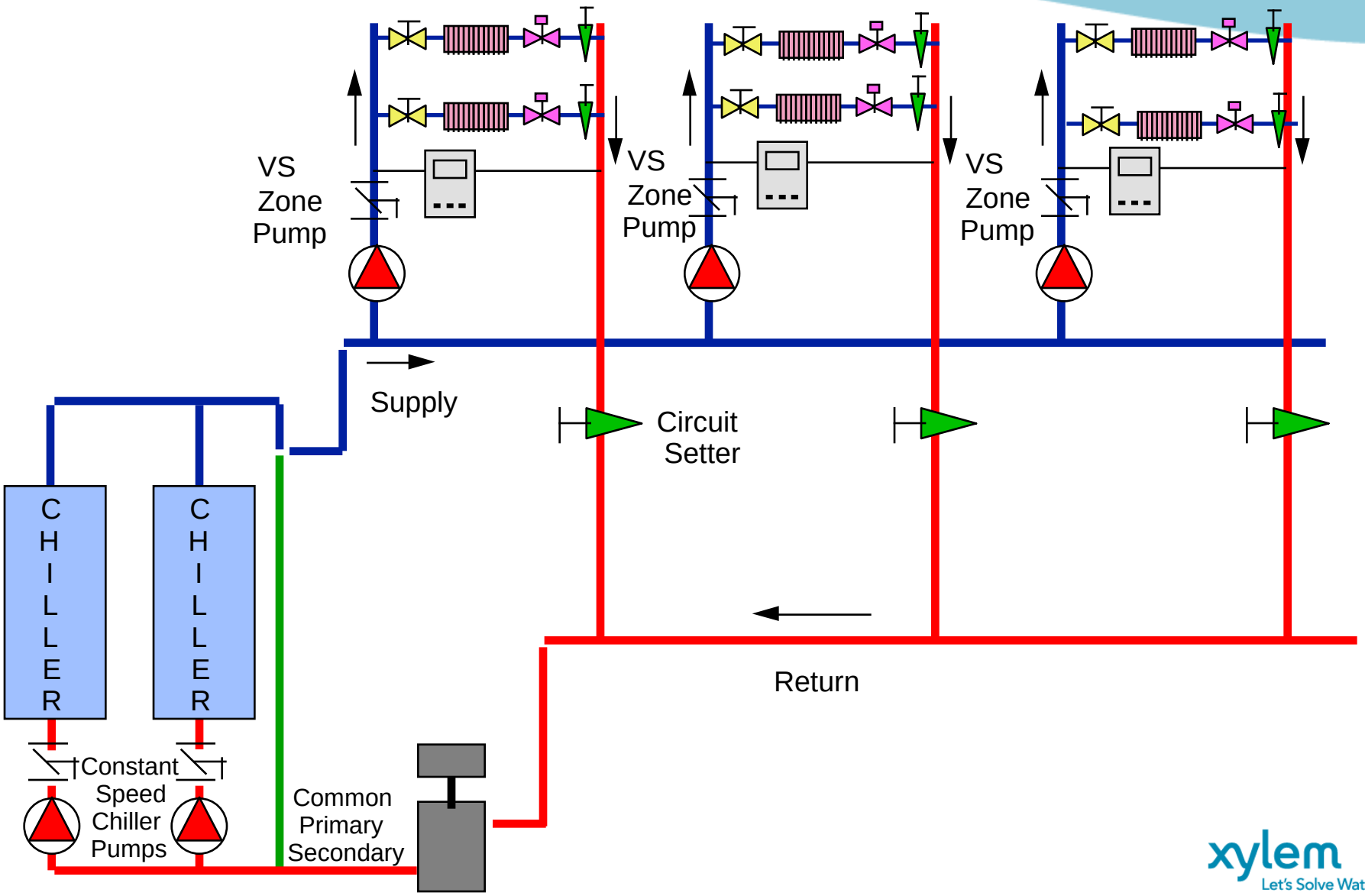

xylem
Let's Solve Water

Primary-Secondary Zone Pumping

- Low ‘built out’ horsepower.
- Low system head.

- Increased control complexity.
- Present horsepower total higher due to future needs.
- Present pumps sized for future requirements.
- Difficult to apply in retrofits projects.
- Downstream zones of equal size require additional horsepower to overcome accumulative head.

xylem
Let's Solve Water

Variable Primary Flow

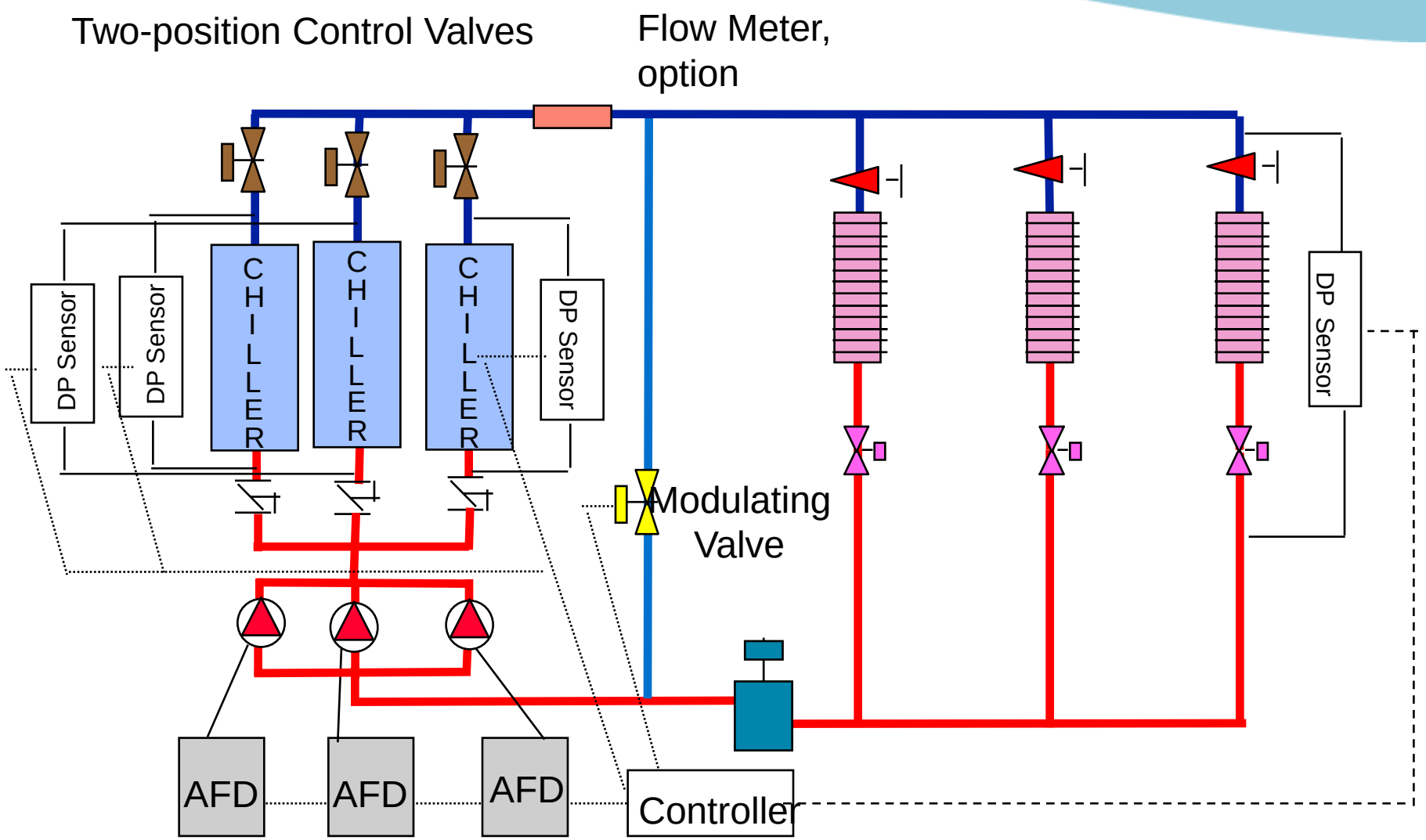

xylem
Let's Solve Water

Airport Chilled Water System
Primary-Secondary Piping

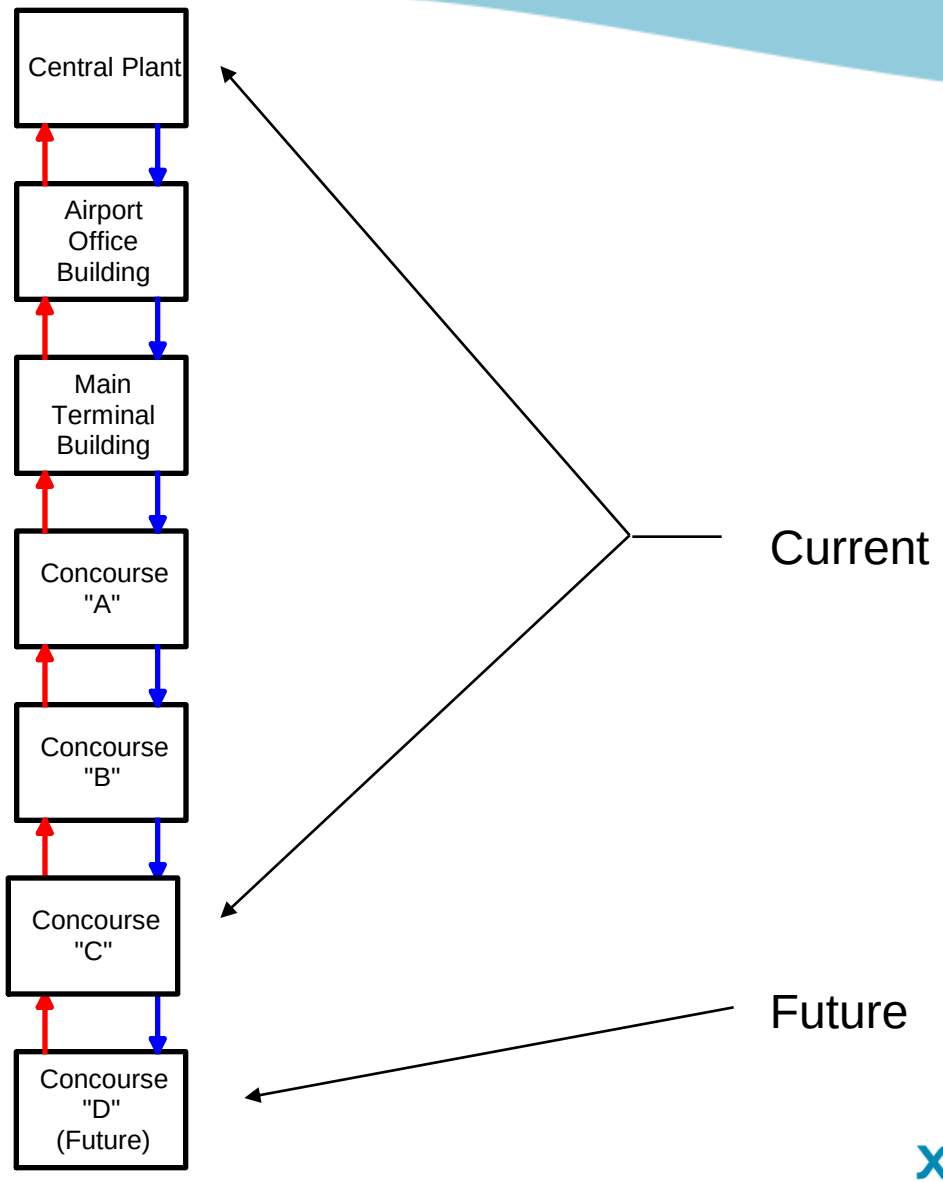

xylem
Let's Solve Water

Primary-Secondary Piping
Present Load Condition

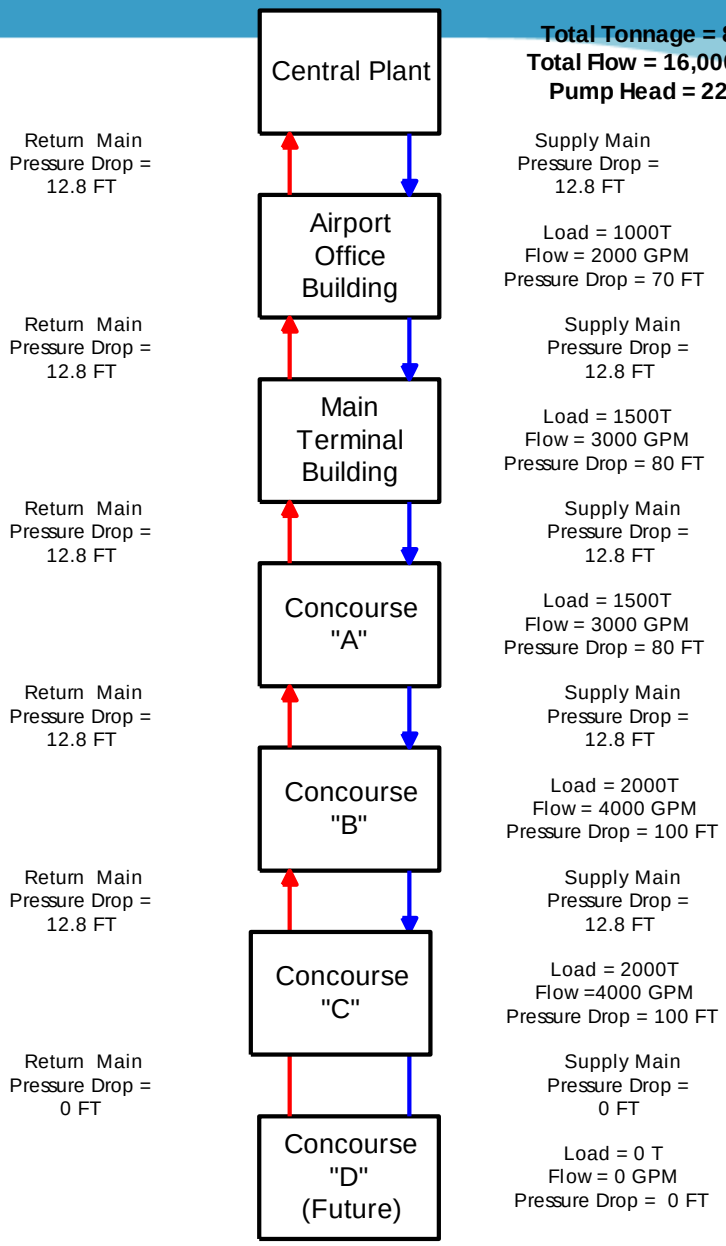

xylem
Let's Solve Water

Horsepower Calculation, Present Condition:

Head Loss @ 16,000 gpm

Piping, etc. $\left[\left(\frac{16}{20}\right)^2 \times 20\ \text{FT}\right] 10\ \text{Segments} = 128$ FT

Zone Pressure Drop @ farthest zone = 100 FT

Total Pressure Drop = 228 FT

Secondary Horsepower = $\frac{16{,}000\text{gpm} \times 228\text{FT}}{3960} = \mathbf{921.2\ Horsepower}$

(Water Horsepower)

xylem
Let's Solve Water

Horsepower Calculation, Future Condition:

Head Loss @ 20,000 gpm

Piping, etc. 20 FT x 12 Segments = 240 FT

Zone Pressure Drop @ farthest zone = 100 FT

Total Pressure Drop = 340 FT

Secondary Horsepower = $\frac{20{,}000\text{gpm} \times 340\text{FT}}{3960} = \mathbf{1717.2\ Horsepower}$

xylem
Let's Solve Water

Comparison of Pumping Methods

A Similar Analysis is Conducted for Each of the Methods Discussed in the Seminar

xylem
Let's Solve Water

Primary-Secondary Piping
Centrally Located Chiller Plant
Present Load Condition

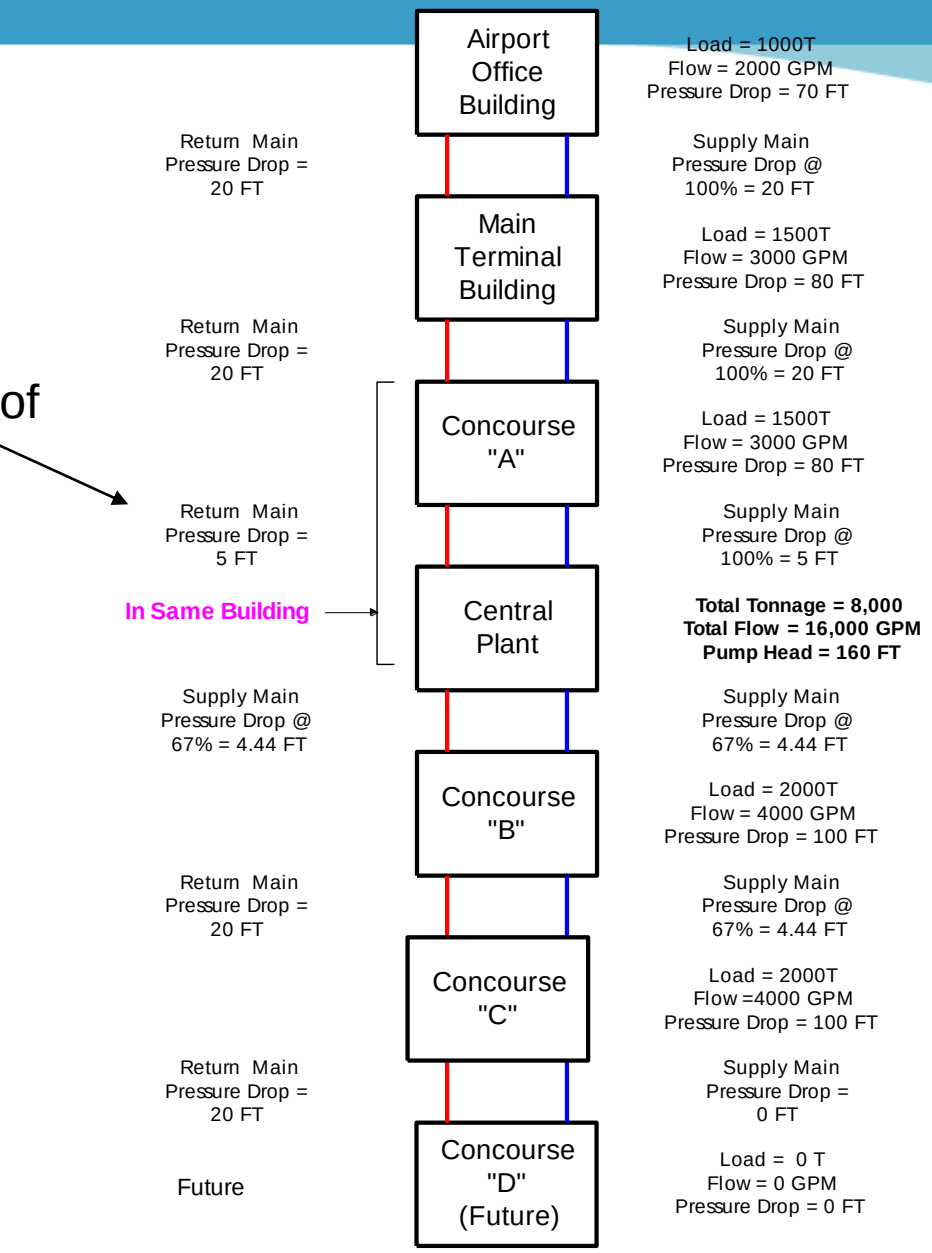

xylem
Let's Solve Water

Summary of Horsepower Calculations

	Remotely Located Plant		Centrally Located Plant	
System Piping	Present-HP	Future-HP	Present-HP	Future-HP
Primary-Secondary	921.2	1717.2	646.5	1111.1
Primary-Secondary-Tertiary	916.2	1722.2	762.6	1116.2
Primary-Secondary Zoned	893.9	1237.3	580.8	803.0
Primary-Secondary-Tertiary Hybrid	820.2	1626.2	702.0	995.3
Primary-Secondary-Tertiary Hybrid*	820.2	1464.6	637.4	944.4

* Due to head available from secondary pumps, some tertiary pumps may be bypassed.

xylem
Let's Solve Water

Location of the Chiller Plant Is Critical

- Minimize piping cost.
- Minimization of system pressure for piping, valves, and coils.
- Reduce required pump head.
- Simplicity of operation.

xylem
Let's Solve Water

There’s a lot to be considered in addition to connected horsepower.

xylem
Let’s Solve Water

HVAC Engineer's Task

The most effective design:

a. initial cost

b. operating cost

c. simplicity

d. flexibility

e. comfort

xylem
Let's Solve Water

Conclusions

- Understand the options.
- Take advantage of the design tools available.
- Exercise judgment in making compromises.
- Consider the whole picture.

xylem
Let's Solve Water

Xylem CBS solutions

GIOVANNI MUGNOLO – BUSINESS DEVELOPMENT MANAGER



XYLEM SERVES CBS CUSTOMERS IN MORE THAN 140 COUNTRIES

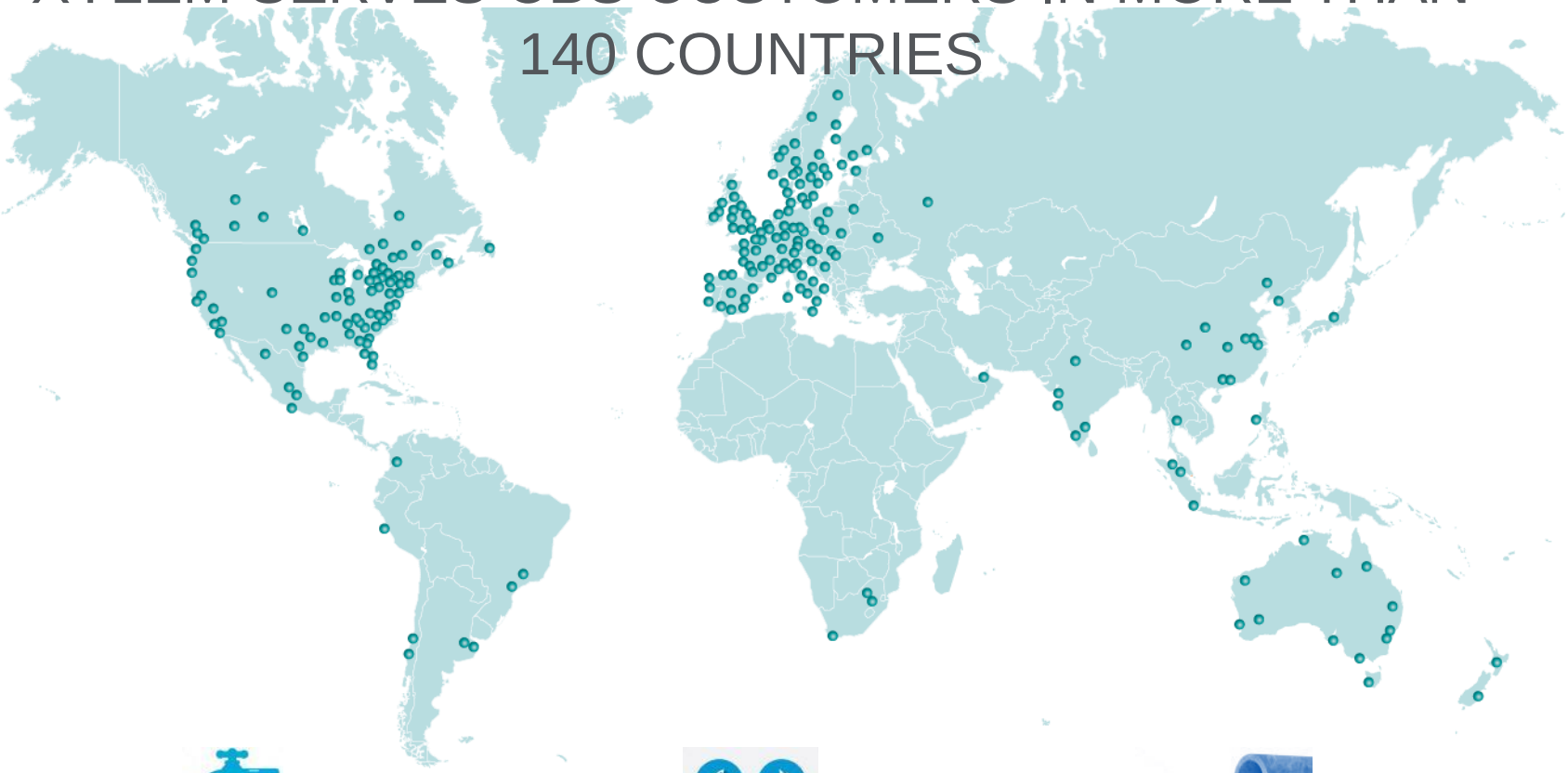



WATER SUPPLY



HVAC



WASTEWATER

xylem
Let's Solve Water

Let’s change the way we speak efficiency



Let’s change the way we speak efficiency

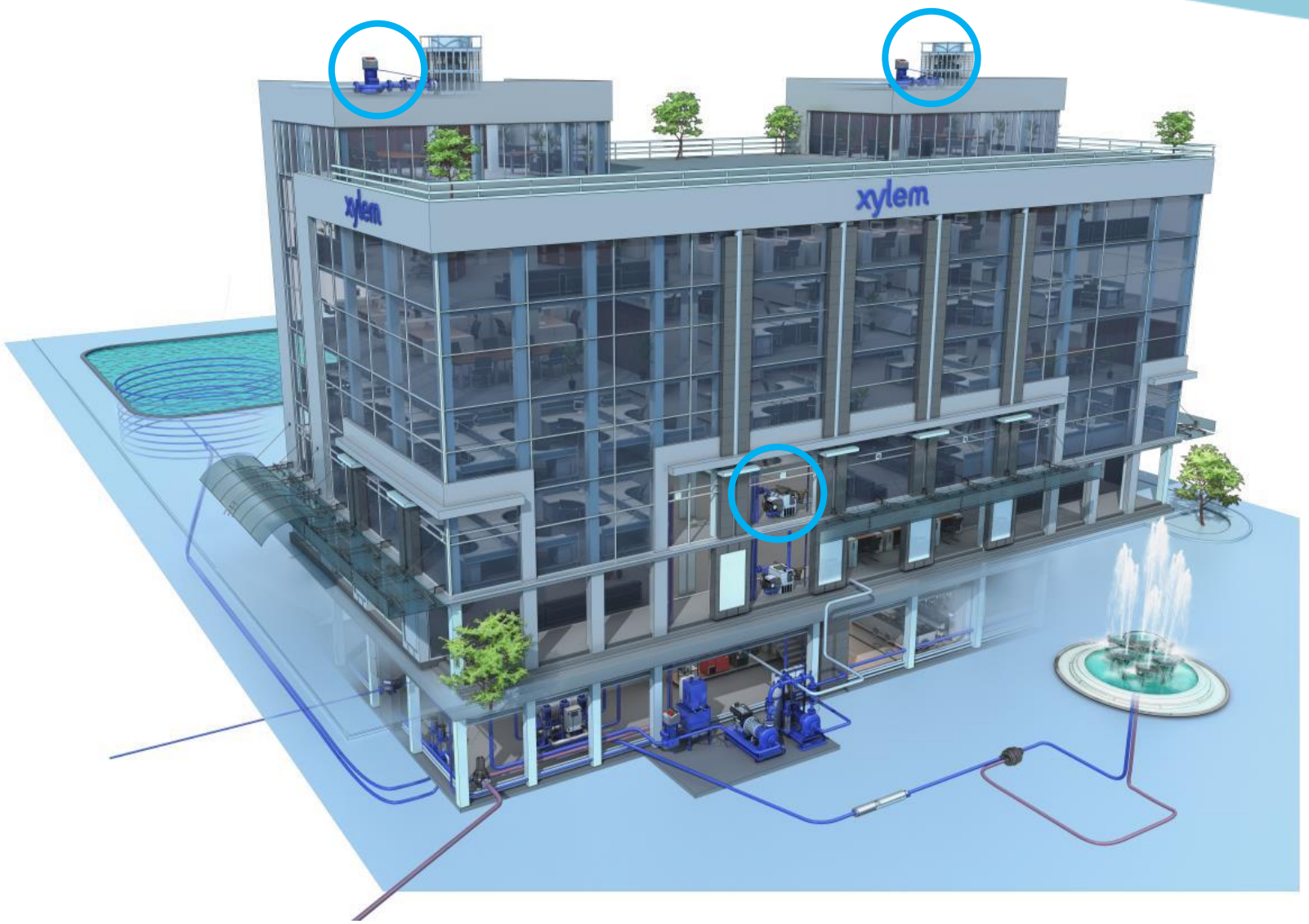

xylem
Let’s Solve Water

HVAC – heating, ventilation & air conditioning

CHALLENGE

- **Climate changes, temperature increase, large buildings, different zones temperatures, request of more comfort**

SOLUTION

- **Pumps and system specific designed for HVAC applications, equipped with VSD in order to meet all the requests**

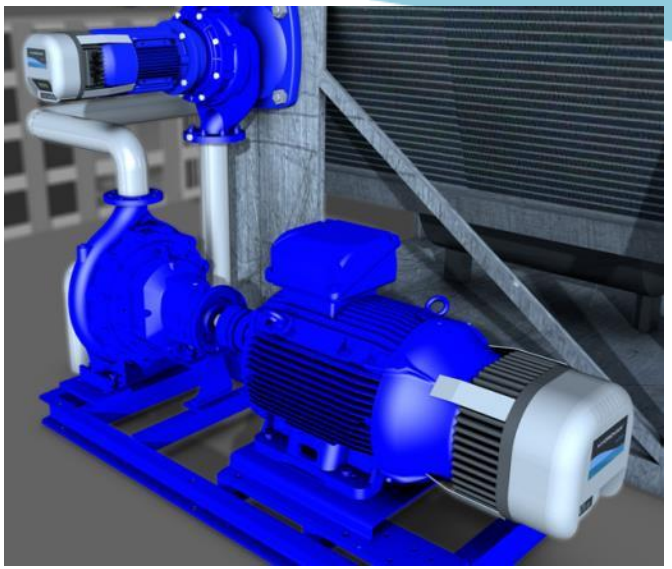

- Complete range of end suction, in line, split case pumps and accessories
- VSD integrated up to 22 kW (wall mounted up to 500 kW)
- Different material offering
- High efficiency and modularity

xylem
Let's Solve Water

HVAC – Circulators and In Line pumps



- In line execution for easier installation
- Flat curves to meet the requirements
- Permanent magnet motors with VSD to reach the highest efficiency
- Communication capabilities (ModBus and BacNet)

Xylem technological advantage: Complete portfolio of high efficiency pumps (exceeding the ErP requirements) with different technologies to meet any applications.

xylem
Let's Solve Water

HVAC – Circulators and In Line pumps








ecocirc XL & ecocirc XL PLUS	
Flow	Up to 70 m^3/h – SINGLE Up to 135 m^3/h – TWIN
Head	Up to 18 m
Power	100 – 1510 W
Temperature	-10 ÷ +110 °C
Motor	ECM wet rotor
Pump body material	CAST IRON STAINLESS STEEL – DHW

e-LNE – e-LNT	
Flow	Up to 800 m^3/h
Head	Up to 100 m
Power	Up to 90 kW
Impeller Material	AISI 316 CAST IRON Bronze

HVAC – End Suction and Split Case pumps



- Different execution (stub shaft, long coupled and split case)
- Flat curves to meet the requirements
- High flow rates for Large Systems
- Dedicated configurations for heavy duty applications

Xylem technological advantage: Robust and reliable pumps with high capacity, different materials and construction configuration to meet all the applications

xylem
Let's Solve Water

HVAC – End Suction and Split Case pumps



e-NSC	
Flow	Up to 1800 m^3/h
Head	Up to 160 m
Power	Up to 200 kW – 2 poles Up to 355 kW – 4 poles
Materials	AISI 316 CAST IRON BRONZE DUCTILE IRON DUPLEX



e-SH	
Flow	Up to 240 m^3/h – 2 poles Up to 130 m^3/h – 4 poles
Head	Up to 110 m – 2 poles Up to 23 m – 4 poles
Power	0,75 – 75 kW – 2 poles 0,25 – 11 kW – 4 poles
Material	AISI 316L

xylem
Let's Solve Water

HVAC – End Suction and Split Case pumps







1510 – 1531 – 1532	
Flow	Up to 1700 gpm – 2 poles Up to 4500 gpm – 4 poles
Head	Up to 520 ft – 2 poles Up to 205 ft – 4 poles
PN	175 psi
Liquid Temperature	Up to 250 °F
Material	Cast Iron pump body SS impeller

xylem
Let's Solve Water

HVAC – End Suction and Split Case pumps

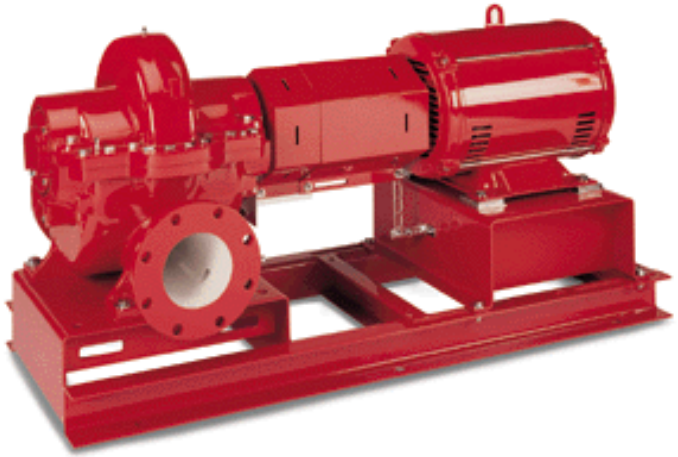

HSC	
Flow	Up to 1400 m^3/h – 50 Hz Up to 1545 m^3/h – 60 Hz
Head	Up to 90 m – 50 Hz Up to 130 m – 60 Hz
PN	12 Bar
Liquid Temperature	Up to 150°C







VSX-VSH	
Flow	Up to 5227 m^3/h – 50 Hz Up to 6364 m^3/h – 60 Hz
Head	Up to 110 m – 50 Hz Up to 160 m – 60 Hz
PN	12 Bar ANSI 16 Bar DIN
Liquid Temperature	Up to 150°C

xylem
Let's Solve Water

HVAC – Triple Duty Valve

Angle Pattern



3DV Model



Straight Pattern Flanged



Straight Pattern Grooved



TDV	
Size	2” → 14” – Straight pattern flanged 2” → 10” – Angle Pattern 2” → 16” – Balanced pattern 2” → 12” – Straight Pattern grooved 1” → 2” – 3DV
Maximum Working Pressure	12 bar / 175 psi – flanged, 3DV 20 bar / 300 psi – grooved
Max Temperature	120°C
Materials	Body: Cast Iron or ductile iron (grooved) Disc: Brass Stem and spring: SS Seat: EPDM Readout Valves: Brass

xylem
Let's Solve Water

HVAC – Suction Diffuser



TDV	
Size	2” → 10” – System side 1½ ” → 10” – Pump side
Maximum Working Pressure	12 bar / 175 psi 20 bar / 300 psi (groove x groove)
Max Temperature	120°C
Materials	Body and cover plate: Cast Iron or ductile iron Orifice Cylinder & Straightening Vanes: SS Start up Strainer: 16 mesh bronze

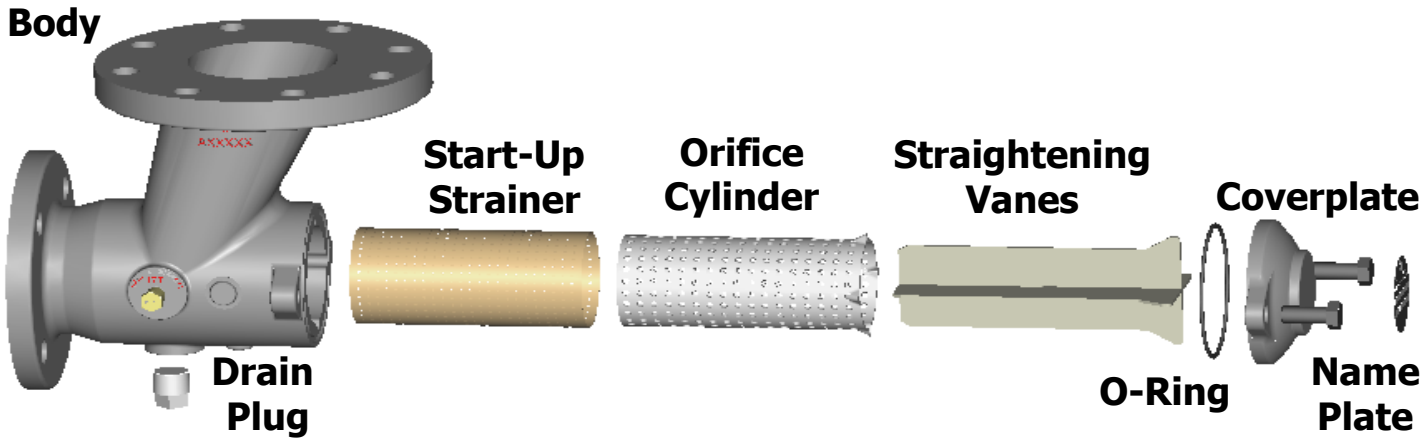

xylem
Let's Solve Water

HVAC – Pressure Independent Control Valves

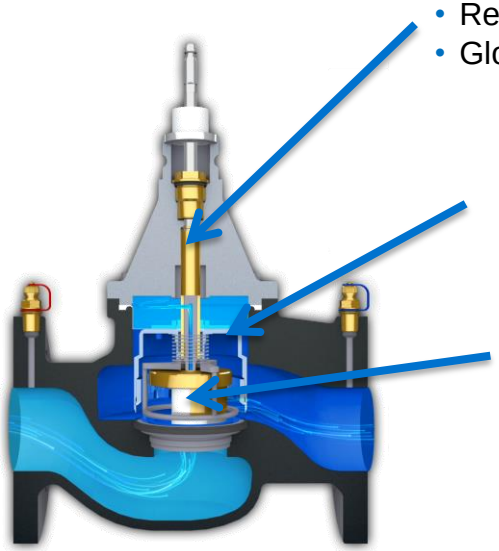

Control Valve

- Maintains 100% authority
- Reduces energy and maximizes user comfort
- Globe design providing ASI Class IV shut off

Pressure Regulator

- Compensates for system pressure fluctuations
- Helps maintain 100% authority
- Provides instantaneous variable Cv
- Eliminates valve hunting and maximizes ΔT

Flow Limitation

- Field adjustable max flow rate with GPM dial
- Limits maximum desired flow rate
- Eliminates overflows reducing pumping and maximizing delta T

ULTRA SETTER	
Size	½" → 6"
Flow	0.03 → 200 m^3/h





xylem
Let's Solve Water

HVAC – Air and sediment separator units

Centrifugal



Rolairtrol - Centrifugal	
Size	2” → 12” – Standard
Maximum Working Pressure	8.5 bar / 125 psi
Temperature	-28 → +176°C
Materials	Body : Cast Iron or carbon steel Baffle: Carbon steel Strainer: Carbon steel or SS Air collection tube: SS

Coalescing

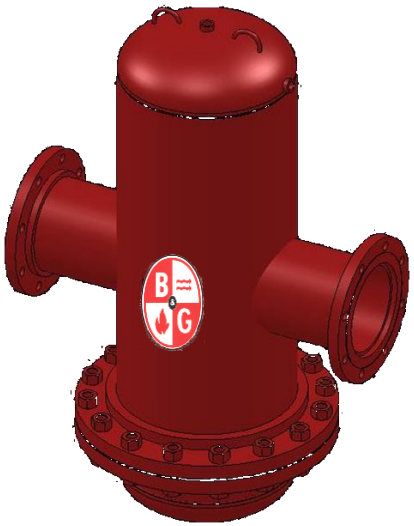

CSR – Caolescing	
Size	2” → 12” – Standard
Maximum Working Pressure	8.5 bar / 125 psi
Temperature	-28 → +176°C
Materials	Body : Cast Iron or carbon steel Baffle: Carbon steel Strainer: Carbon steel or SS Air collection tube: SS

xylem
Let's Solve Water

Burj Khalifa – Dubai



- Recover of the condensate water from the windows through a micro-channel system
- Filter and disinfection system
- Water used for the irrigation of the Burj Khalifa park

100 millions liters of water recovered every year





38 booster sets from 7,5 up to 110 kW



3 Firefighting booster sets



2 booster sets in superduplex

xylem
Let's Solve Water

Levi’s stadium – Santa Clara

Levi’s stadium – Santa Clara



68500 seats

- The stadium received Leadership in Energy & Environmental Design (LEED) Gold certification, first stadium in the American continent
- use of recycled water for the toilet flushing and irrigation systems that saves more than 42 million gallons of water per year
- More than 50 different Xylem products installed













xylem
Let’s Solve Water

Ashgabat 2017 games



Ashgabat in Turkmenistan is set to be the home of the fifth Asian Indoor and Martial Arts games in 2017. Totaling over 1,466 square meters, the multi-purpose sports facility, comprising 30 venues.

The Xylem team specified more than 1,000 pumps for water and wastewater handling for phase one and two of this project.

















xylem
Let's Solve Water

Angre e Loures hospitals



- Xylem choosed as unique supplier for the entire pumping systems of the 2 hospitals
- All the water supply systems equipped with VFD generating a 50% of energy saving
- More than 40 different Xylem products installed



10 booster sets



2 firefighting booster sets



24 HVAC pumps



5 sewage pumps

xylem
Let's Solve Water

Heat Exchangers

SYLVESTER CHEN, BUSINESS DEVELOPMENT ENGINEER







What is Heat Transfer?

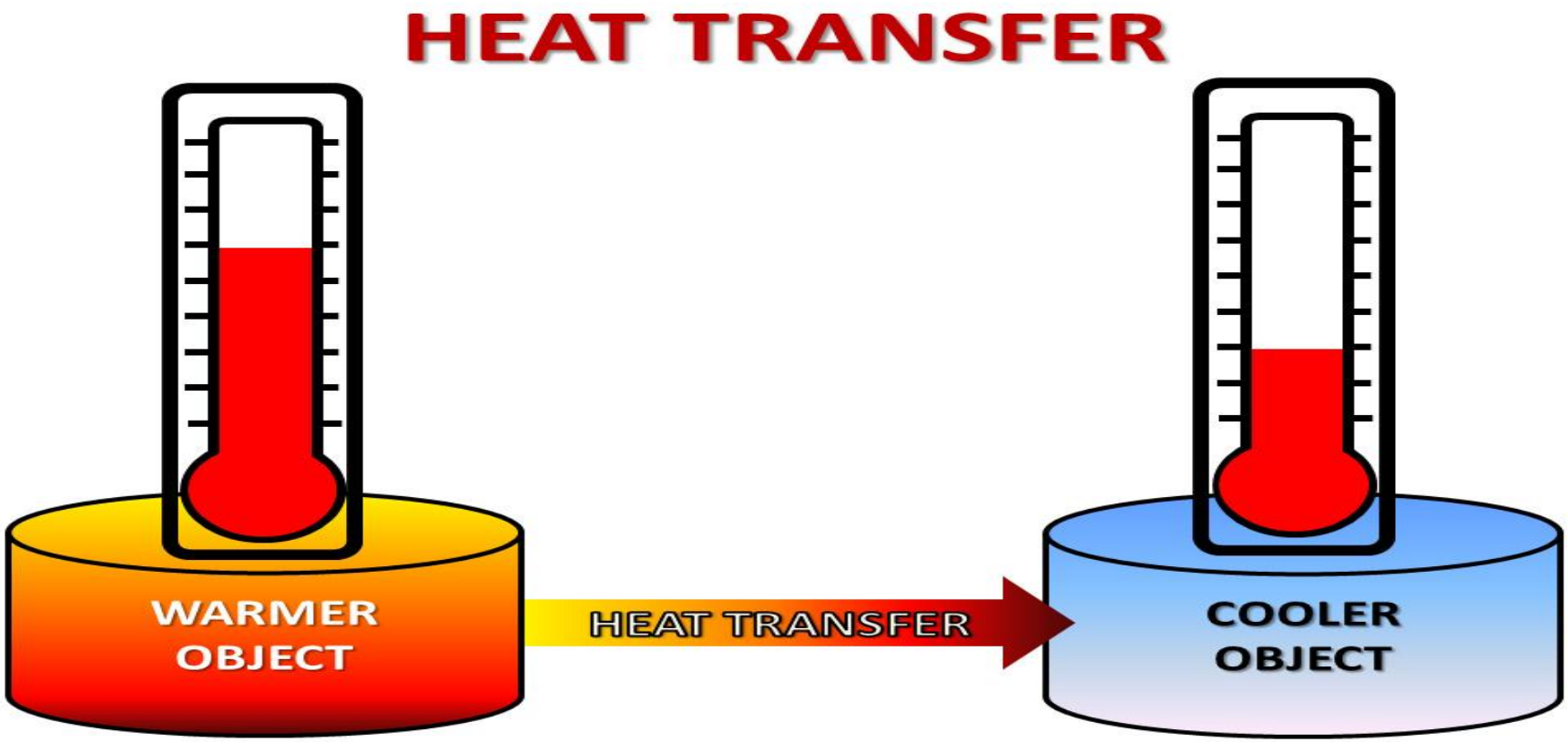

The exchange of thermal energy from one medium to another

xylem
Let's Solve Water

What is Heat Exchanger?

A device for transferring heat from one medium to another

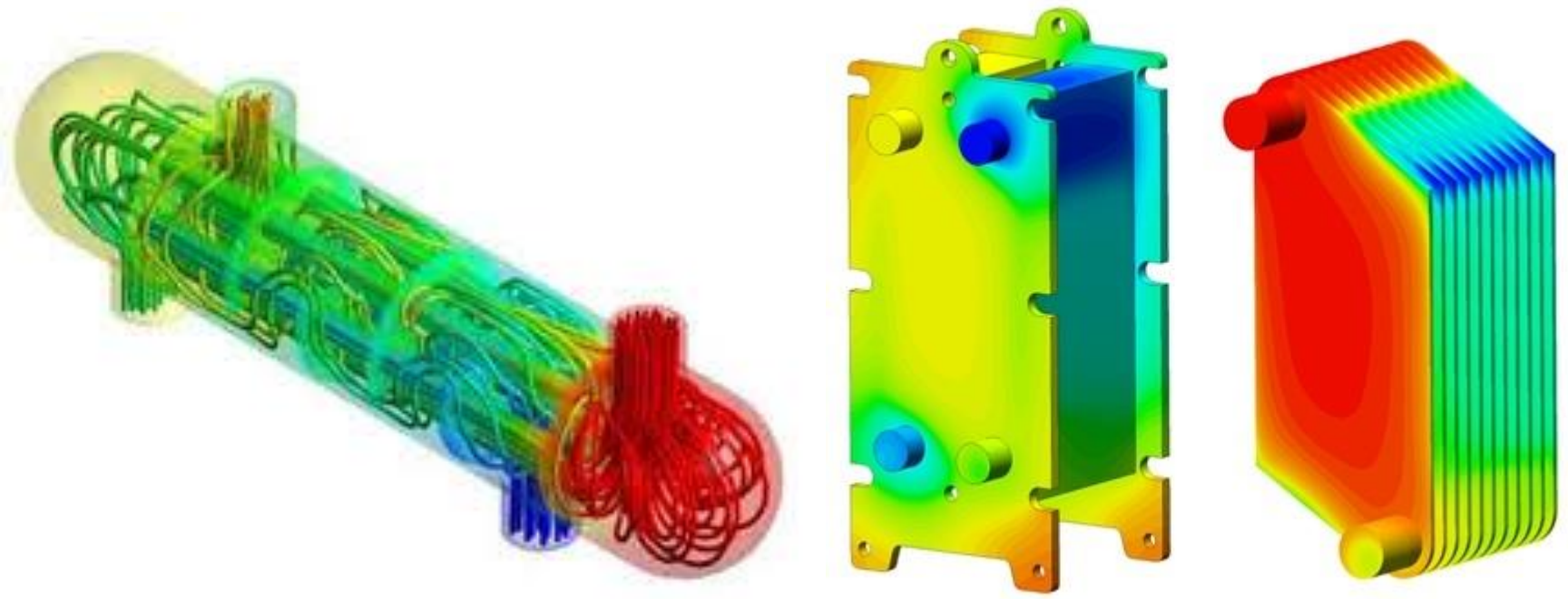

xylem
Let's Solve Water

Typical Applications
Commercial HVAC

xylem
Let's Solve Water

Cooling Tower Isolations

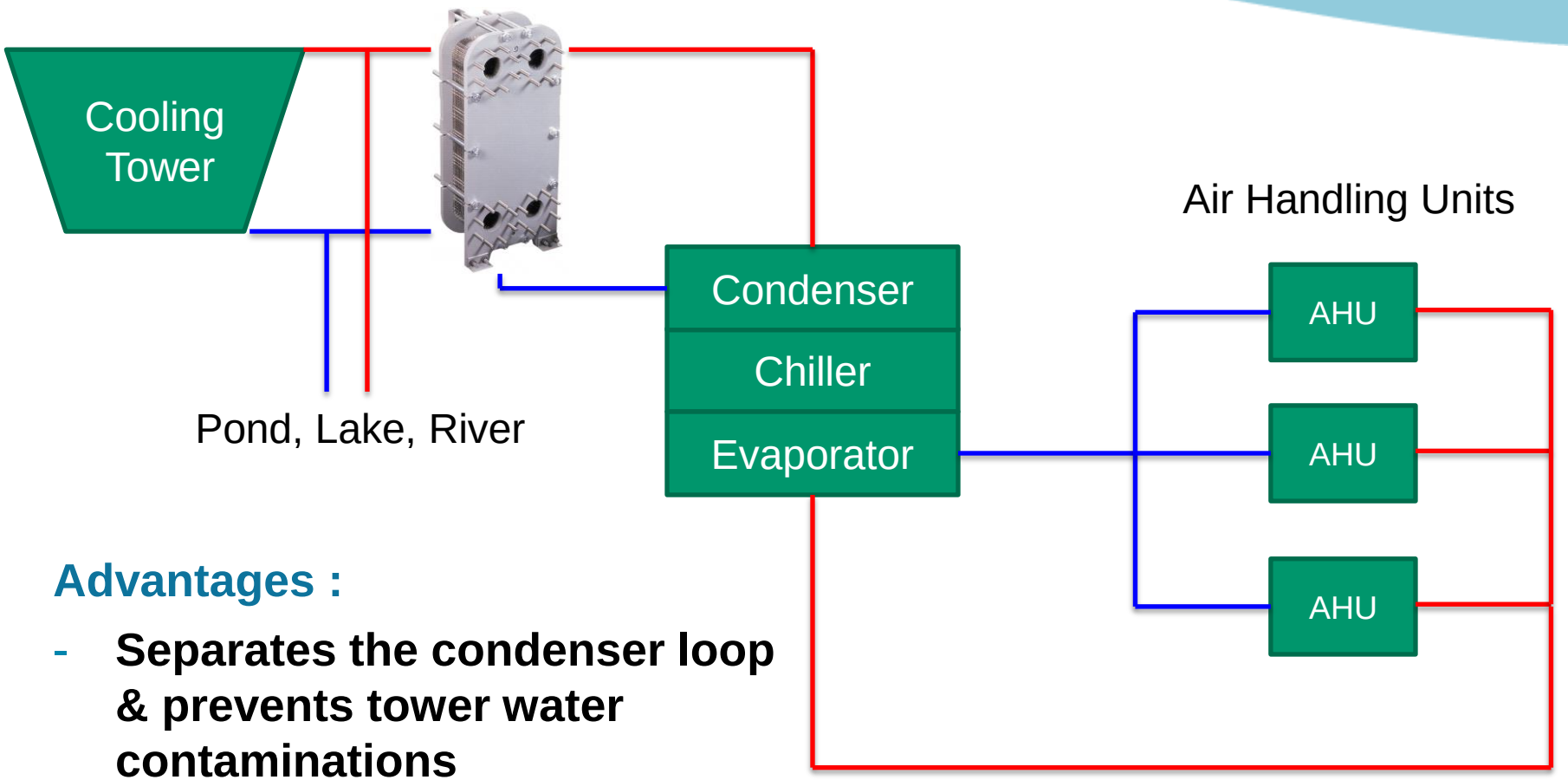

Advantages :

- **Separates the condenser loop & prevents tower water contaminations**
- **Secondary cool water sources possible**

xylem
Let's Solve Water

Free Cooling Waterside Economizer

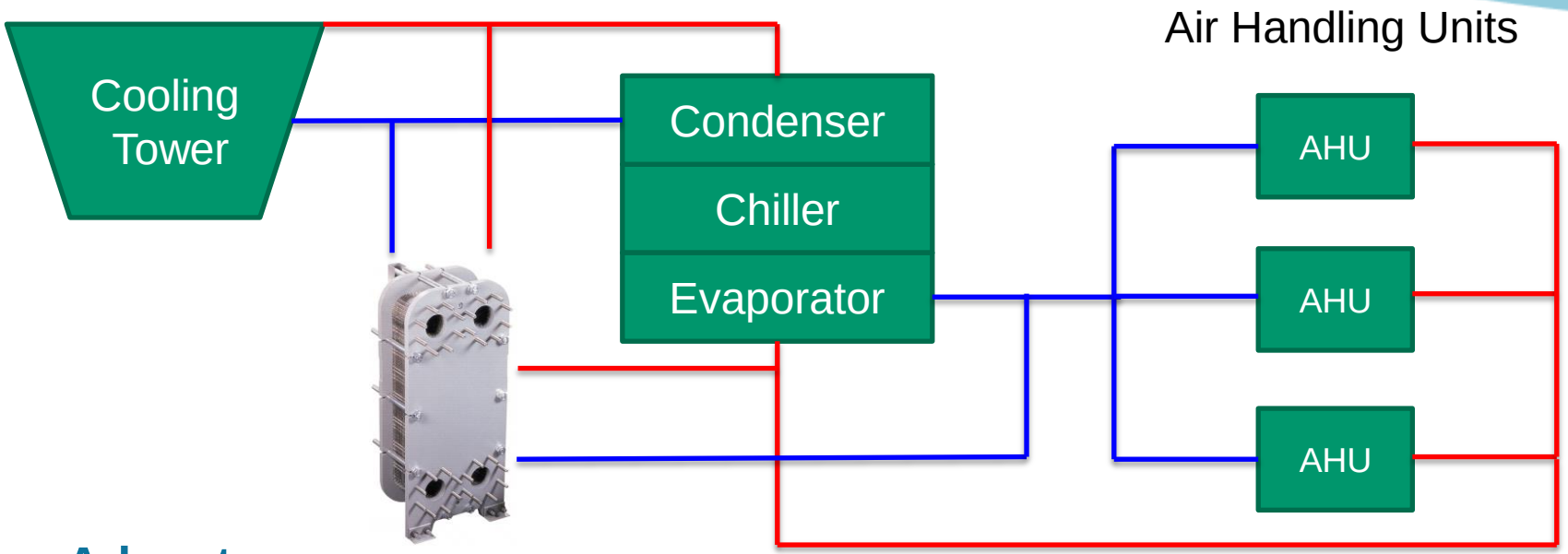

Advantages :

- **Save hours of mechanical refrigeration**
- **Using outside air for free cooling**
- **Delivers cooling tower water that minimizes chiller operations**
- **Protects expensive AC equipment from tower water contaminations**

xylem
Let's Solve Water

Pressure Interceptor

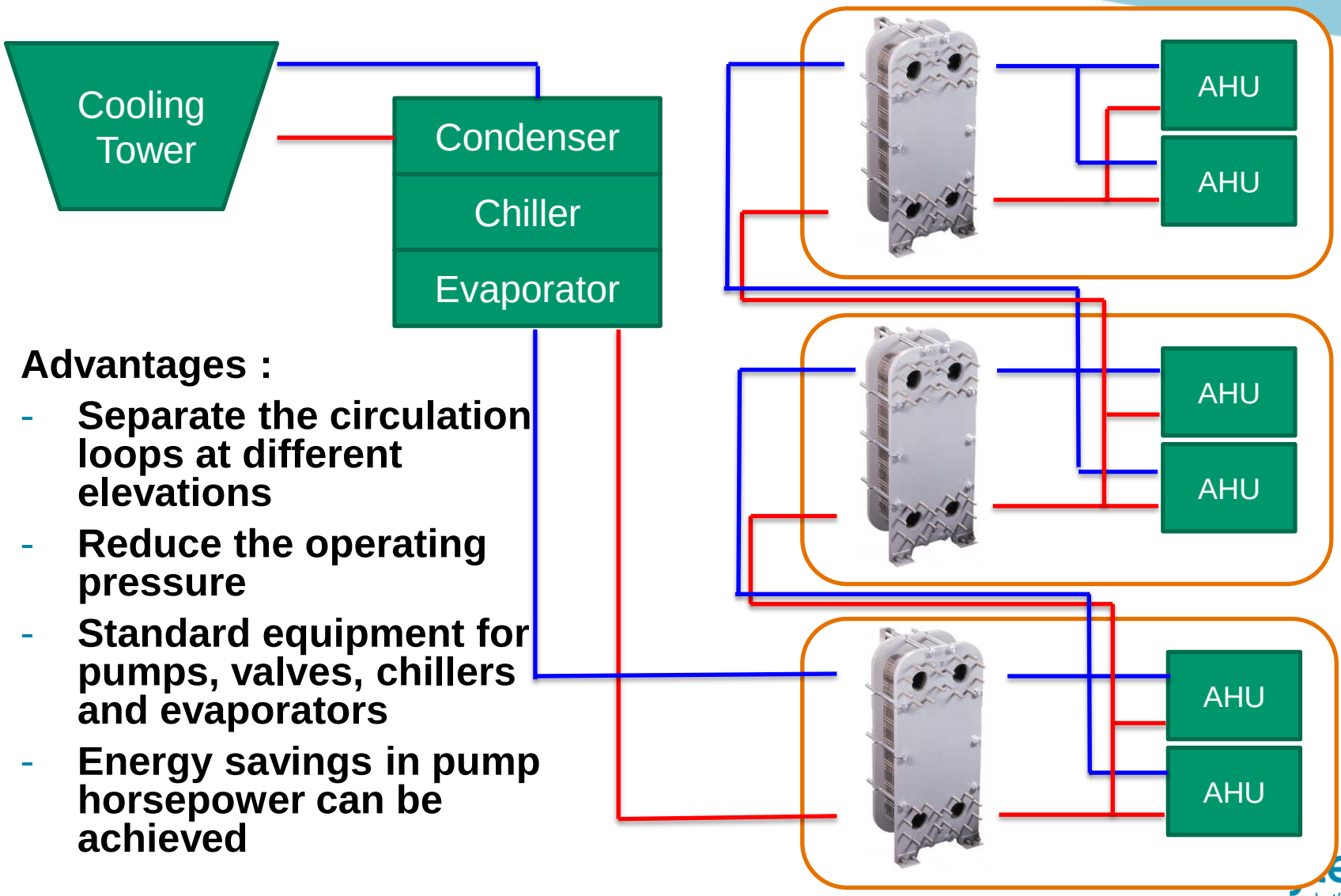

Advantages :

- **Separate the circulation loops at different elevations**
- **Reduce the operating pressure**
- **Standard equipment for pumps, valves, chillers and evaporators**
- **Energy savings in pump horsepower can be achieved**

Let's Solve Water

District Cooling

Centralized Chiller Plant

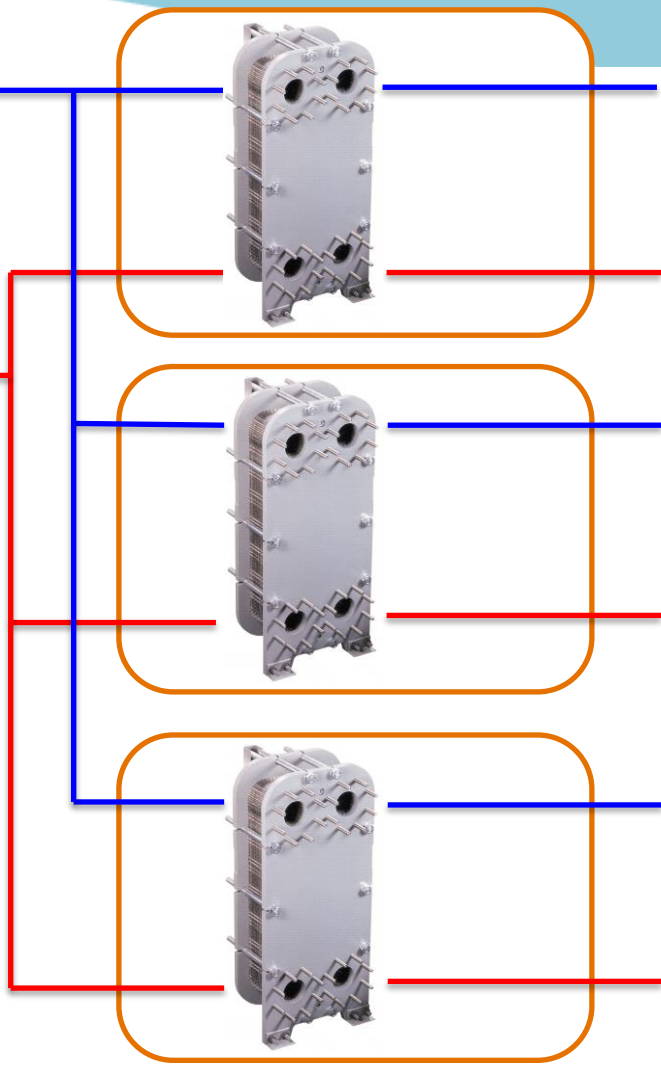

Advantages :

- **Savings realized with one large centralized plant**
- **Separate cooling loop for each building**
- **Chilled water sent to each building via insulated plant**
- **Provides isolation and pressure interception for the water loops**

xylem
Let's Solve Water

Gasketed Plate & Frame Heat Exchangers

xylem
Let's Solve Water

Heat Exchangers – Gasketed Plate & Frame



Wide Product Range	
Size	1 – 18 inch Ports
Plate Material	304SS, 316SS Titanium, Hastelloy SMO 254, AL6XN Other high alloys
Gasket Material	NBR (Nitrile) HT (284 °F) EPDM HT (302 °F) Viton (338 °F)
Plate Corrugations	Chevron or Herringbone Pattern
Design Pressure	150 / 300 psig (standard) Max 450 psig (uponrequest)
Design Temperature	0 – 338 °F ~ 350 °F (upon request)

xylem
Let's Solve Water

Basic Principle

- A basic plate heat exchanger consists of a series of thin, corrugated plates with gaskets that are compressed together within a rigid frame to create an arrangement of flow channels.
- The fluids travel in opposite directions through alternating channels.
- The thin plates are stamped with a unique chevron pattern
- Four holes punched in the plate corners form a continuous tunnel which acts as a distribution manifold for the inlet and outlet of each fluid
- Each plate is fitted with a gasket.
- The gasket either confines the fluid to the port or directs the fluid to the heat transfer area of the plate
- The gaskets also ensure that the two fluids never mix.



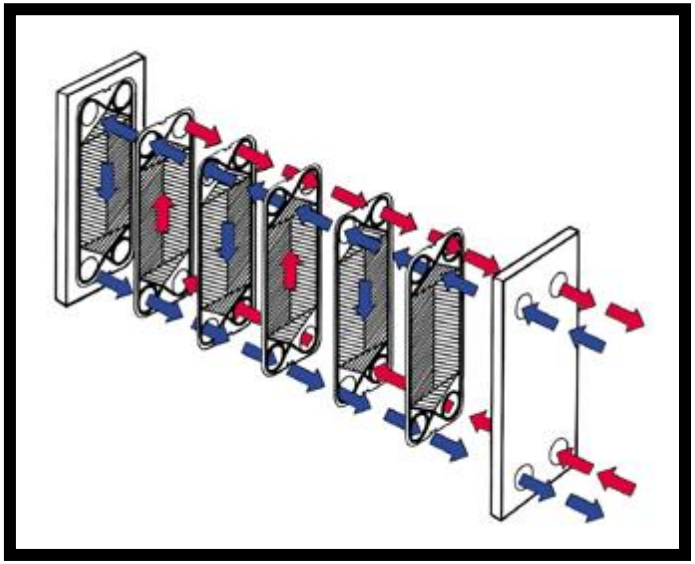

xylem
Let's Solve Water

Basic Components

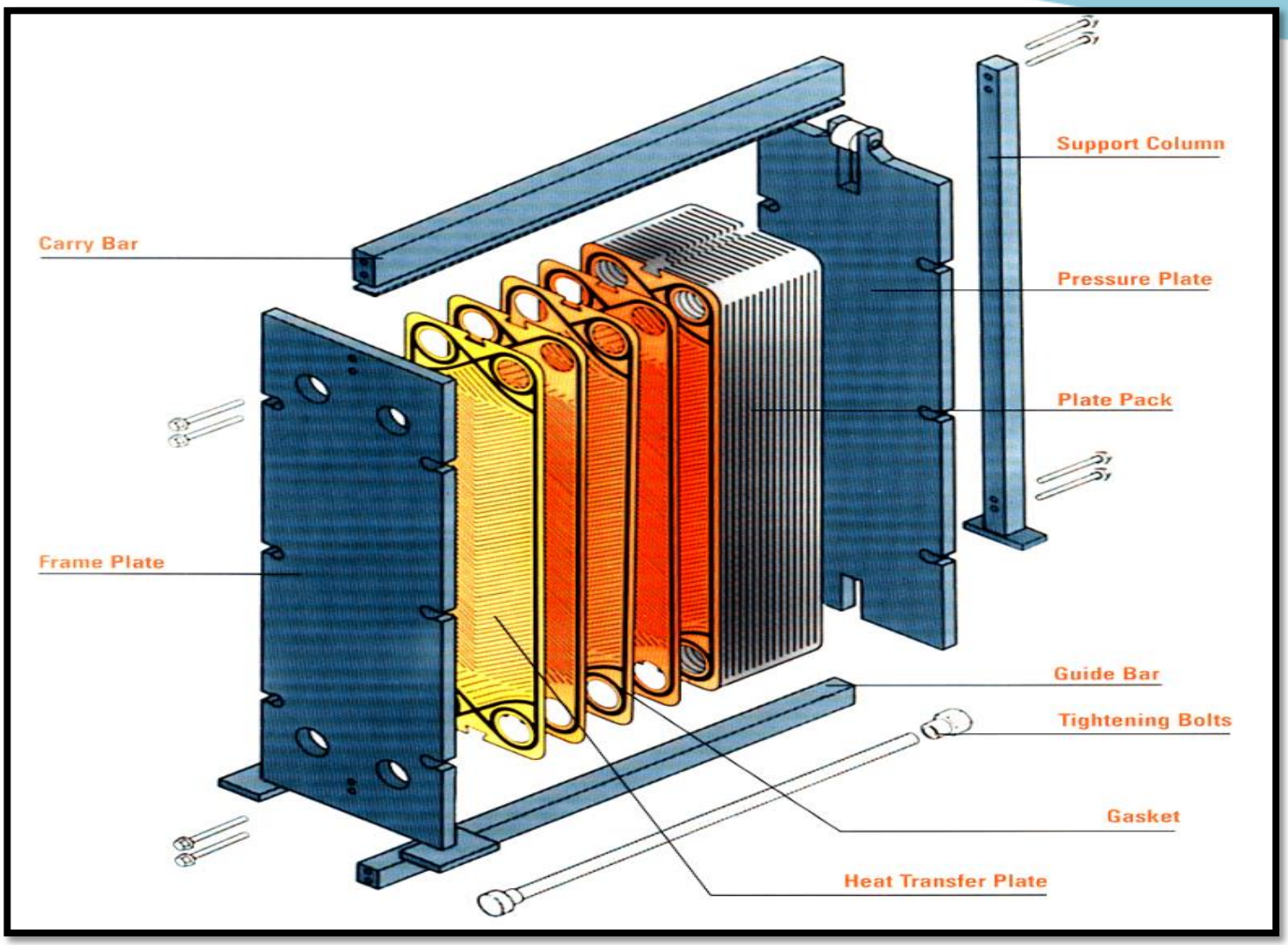

xylem
Let's Solve Water

Design Features

Connections

- Smaller connections are female NPTs
- Larger connections are studded ports
- All standard ‘P’ units are parallel flow
- Countercurrent flow

Single pass

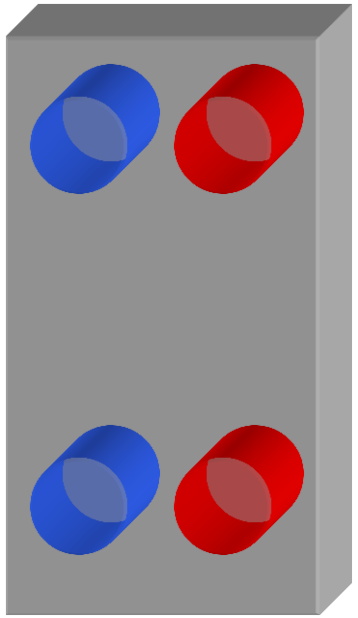

xylem
Let's Solve Water

Design Features

Multi-Pass (odd)

Frame Plate (Front)

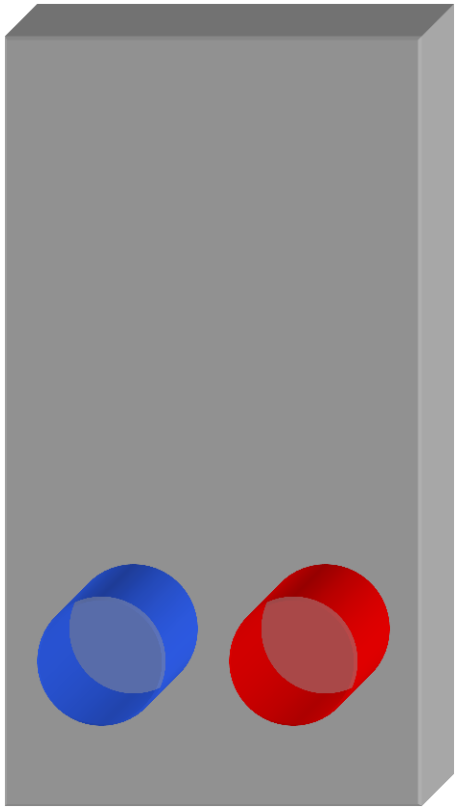

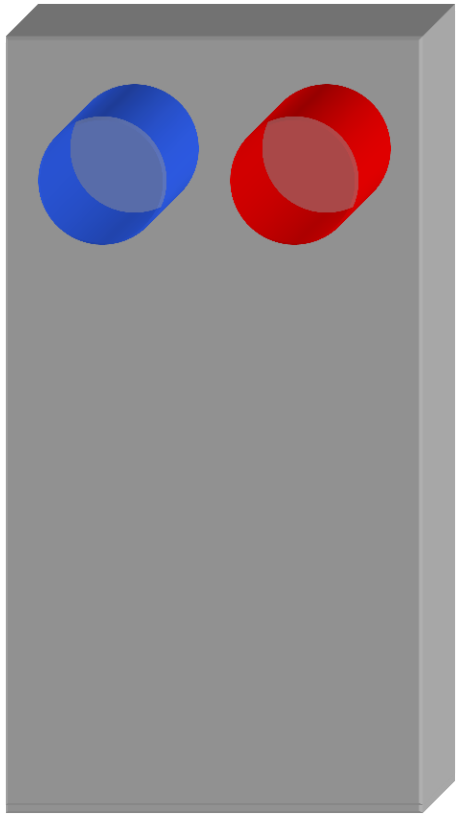

Pressure Plate (Rear)

xylem
Let's Solve Water

Fluid Distribution

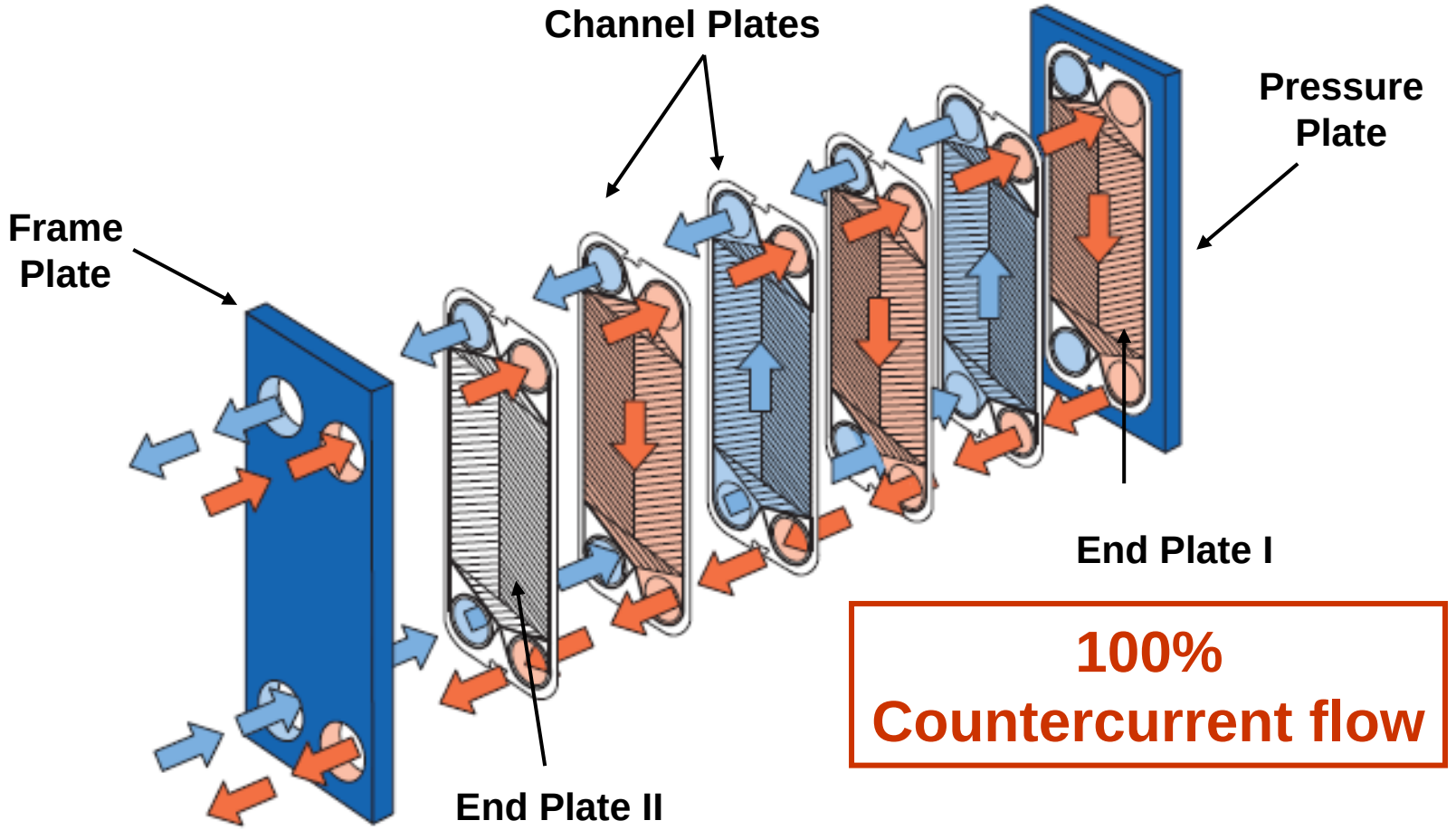

Design Features

Plate Alignment Systems

- Each model features interlocking plate alignment systems
  - The “Lock gasket”
    - Interlocks each plate through lugs around the gasket
  - The “Rolled Edge Hanger”
    - Interlocks each plate through the plate hanger



xylem
Let's Solve Water

Design Features

- Glued

Glue Free

- Easier, less costly replacement
- Lock
  - Tabs are pressed through holes in the plate
- Hang-On
  - Clips on outer edge of plate



xylem
Let's Solve Water

Design Features

Double gasket system

No fluid intermixing due to a gasket failure

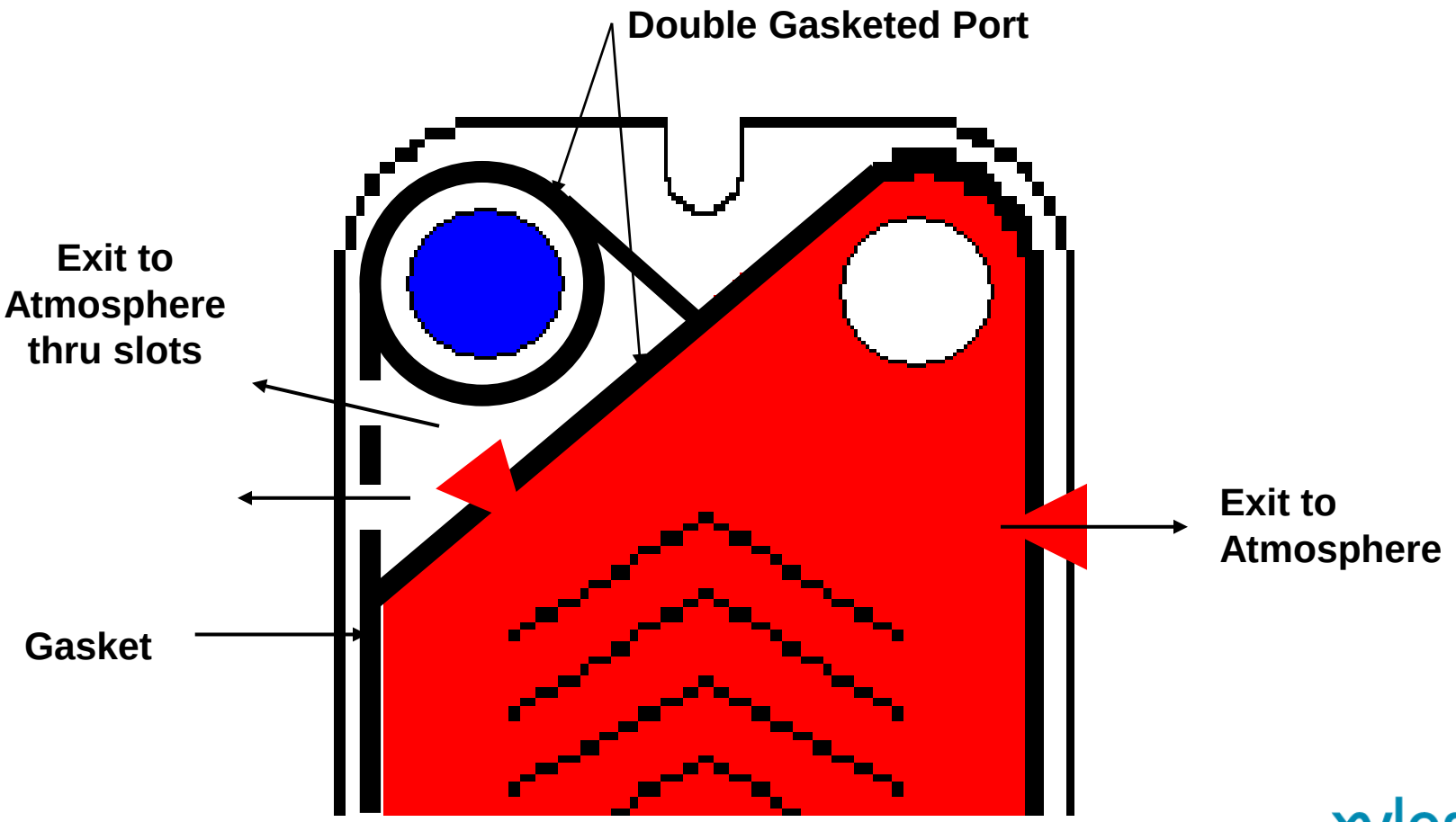

Design Features

Plate Corrugations

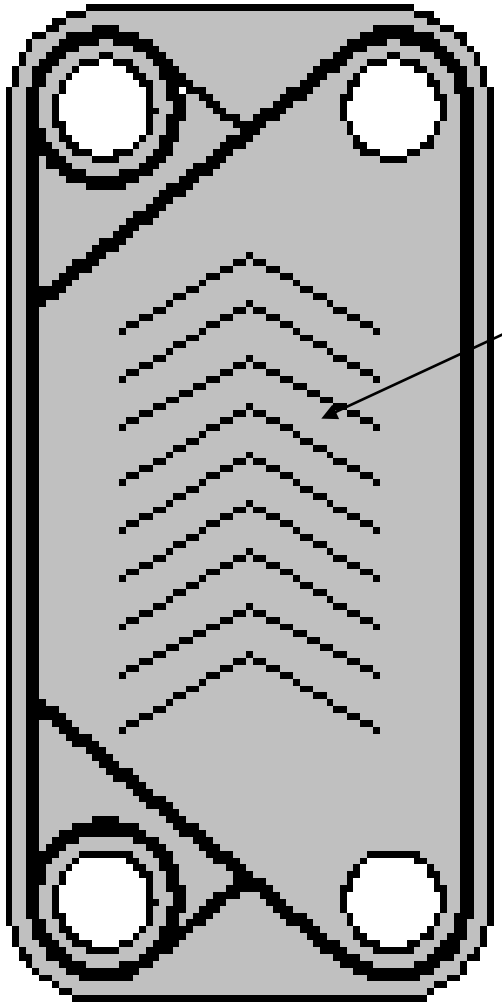

Chevron or Herringbone Pattern

<u>Advantages:</u>

- **Makes the plate rigid**
- **Creates contact points for strength**
- **Promotes turbulence**

xylem
Let's Solve Water

Design Features

Extra Thermal "Long" (TX)

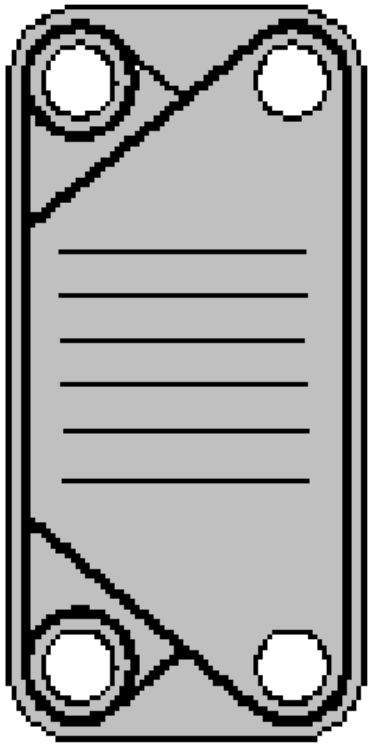

Chevron angle horizontal or near horizontal

Thermal "Long" (TL)

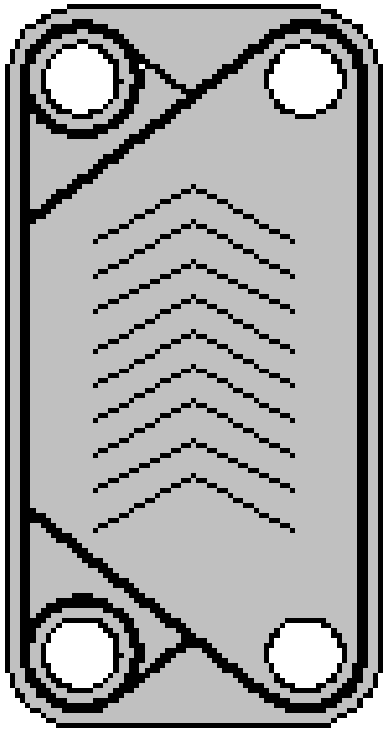

Chevron angle greater than 90º

Thermal "Short" (TK)

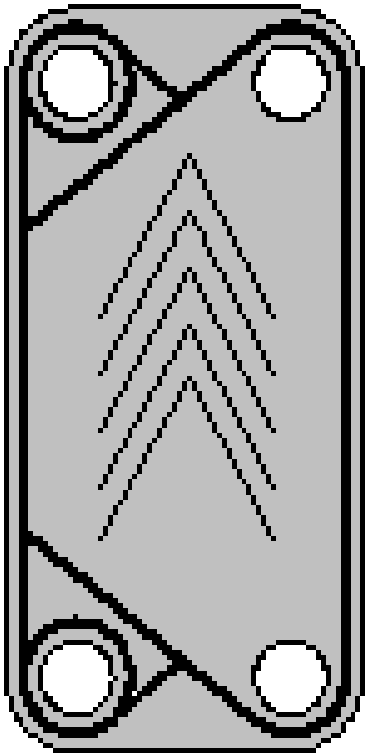

Chevron angle less than 90º

xylem
Let's Solve Water

Channel Types

- **TLX (mixed extra long & long) – highest heat transfer and ΔP**
- **TL (All Long) - High heat transfer & High ΔP**
- **TK (All Short) - Lower heat transfer & Lower ΔP**
- **TM (Mixed Long & Short) - Medium heat transfer & Medium ΔP**

Benefits

Compact & Efficient

Can perform with 1/3 to 1/5 the surface area required in a Shell and Tube

- Higher surface area to volume ratio than S & T
- “True” counter current flow maximizes the mean temperature difference
- Unique high turbulence plate - gives high heat transfer coefficients
- Less expensive than Shell &Tube in most applications
  - Applications requiring alloy materials



xylem
Let's Solve Water

Benefits

- Handles close temperature approaches
- Handles large temperature cross situations
- Environmentally efficient
- Plateflow is an exceptional choice for heat recovery applications

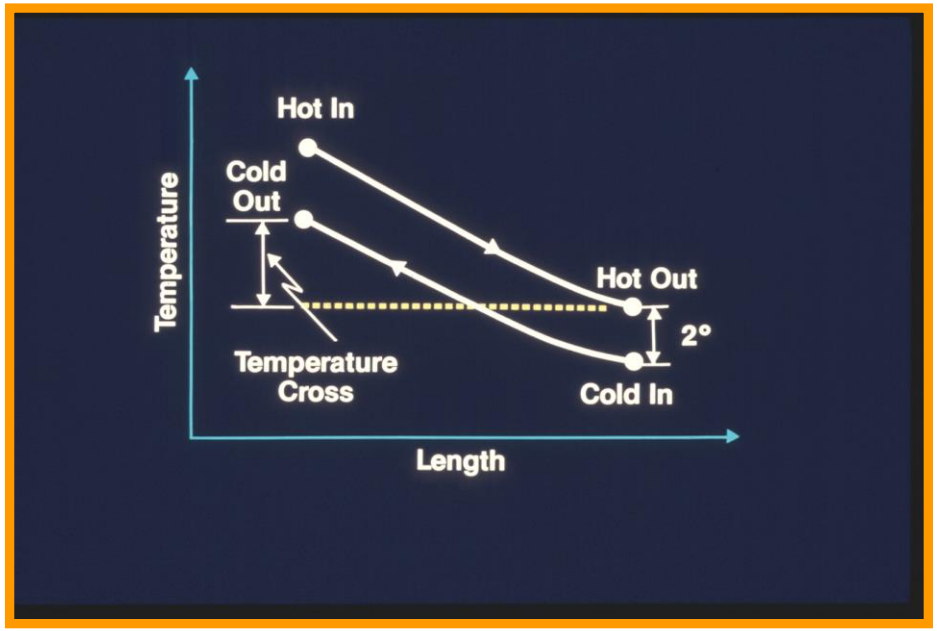

xylem
Let's Solve Water

Benefits

The frames are easy to open & close:

- Heat transfer surfaces can be cleaned
- Allows for quick maintenance
- Re-gasket
- Plate replacement
- Units are expandable
- On-site Disassembly/Reassembly

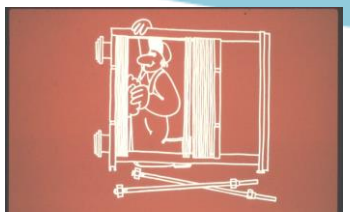

“Easy Access”

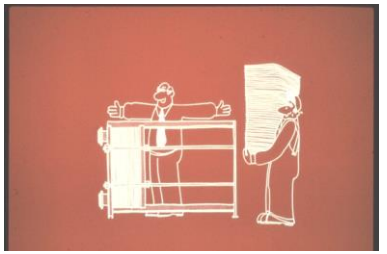

“Flexible”

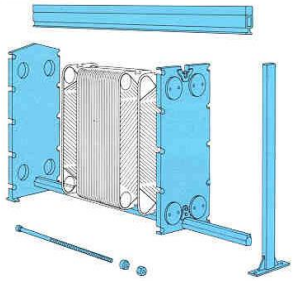

“On-site Assembly/Disassembly”

xylem
Let’s Solve Water

Product Range

- Port sizes from 1” to 18”
- Extended length plates
  - Add surface w/o decreasing velocity
  - Increase percentage of effective surface area per plate
- Higher U value
- Single Pass
- Smaller footprint
- Double Wall
- Free-Flow
- Semi-welded

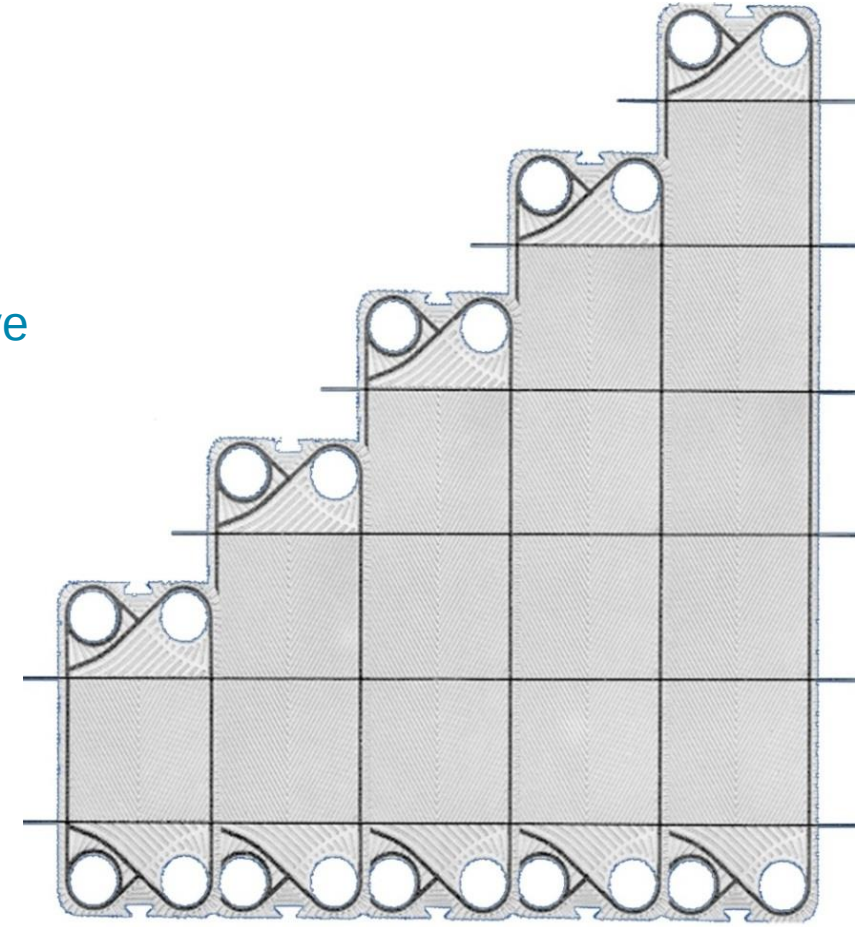

xylem
Let’s Solve Water

Limitations

- **Temperature Range -17°C to 170°C**
    - Gaskets are the limiting factor
    - Higher temperatures may be addressed upon request to ~177°C.
- **Pressure standard designs for 10 bar and 20 bar**
    - Higher pressures can be addressed upon request to maximum 31 bar
- **Fluid compatibility with materials**
- **Fixed connection sizes**
- **Plugging**

  Typical industry guidelines are suspended solids no more than 20% by weight and particle size no more than 50% in diameter of the plate gap.

xylem
Let's Solve Water

Capabilities

- ASME Section VIII Div 1 w/U stamp
- ASME Section III
- CRN
- EC PED/CE Mark
- AHRI Standard 400 certified
- FEA
- NR-13
- API 662
- Other

xylem
Let's Solve Water

xylem

Let's Solve Water

FOLLOW US

