Tender specification:

Oventrop electrothermal actuator for steady control. Proportional actuator (0-10 V) with connection thread M 30 x 1,5, closed with current “off”, with “First-Open” function, stroke index and automatic recognition of neutral point and valve travel. The actuator can be installed in any position. Easy plug-in connection with valve adapter.

Model:	**Item no.:**
“Aktor T ST” 24 V, proportional actuator (0-10 V) closed with current “off”	1012953

Performance data:

Operating current:	24 V AC, –10% up to +20%, 50/60 Hz
Start up load:	< 320 mA for a max. of 2 min.
Continuous current:	about 42 mA
Control voltage:	0-10 V DC
Input impedance:	100 kΩ
Travel:	5.0 mm
Piston stroke:	automatic recognition
Operating power:	> 90 N
Medium floating time:	30 s/mm
Protection:	IP 54 in any position
Protective system:	III according to EN 60730
Fluid temperature:	0 °C up to 100 °C
Ambient temperature:	0 °C up to 60 °C
Storage temperature:	-25 °C up to +60 °C
Connecting cable:	3 x 0.22 mm², length 1 m, plug-in connection

Installation and fitting:

Electrical connection must be carried out in accordance with the requirements of the local Electricity Board.
The connecting cable must not come into contact with the hot pipe as excessive heat will accelerate the ageing of the cable insulation.
When choosing the switching contacts and the network fuses, the start up of the heating element has to be taken into consideration. The following cable lengths are recommended for a 24 V installation:

Cable cross-section [mm²]	24V max. length [m]
2 x 0.22	20
2 x 0.80	45
2 x 1.50	136

When installing several actuators, the indicated length of cable must be divided by the number of mounted actuators.

A safety transformer according to EN 61558-2-6 must always be used. Dimensioning of the transformer is determined by the start up power of the actuators.
Rule-of-thumb: $P_{Transformer}$ = 6 W x n
n = Number of actuators

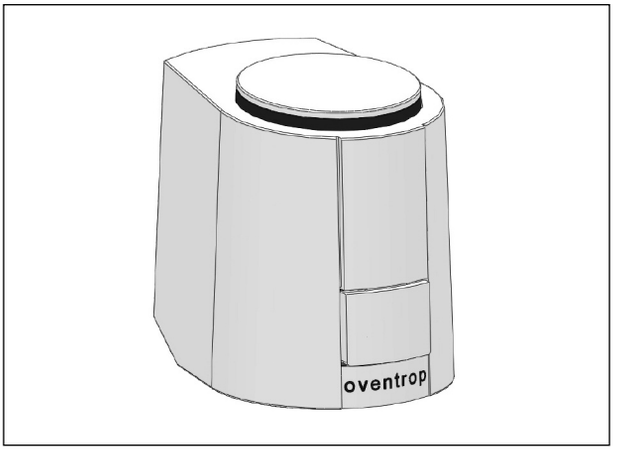

“Aktor T ST”

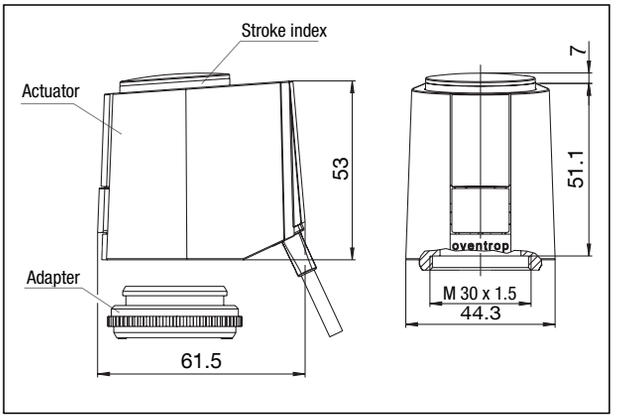

Dimensions

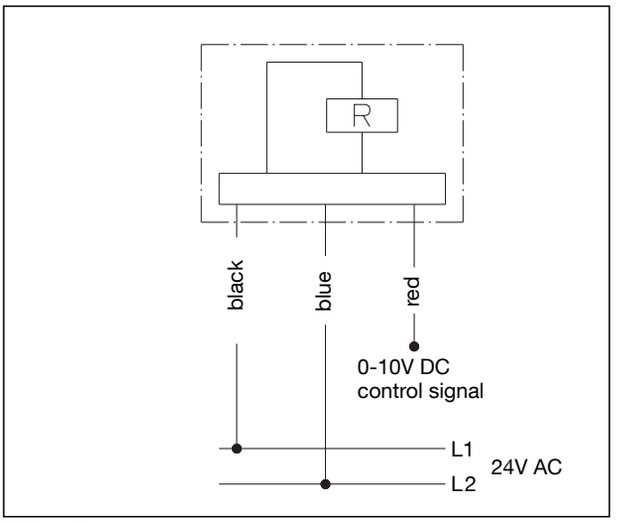

Wiring diagram

The actuator is mounted with the help of the valve adapter, no tools are required. The valve adapter is manually screwed onto the valve and the actuator is fixed to the adapter by use of the plug-in connection.
The Oventrop electrothermal actuator can be installed in any position but a vertical (stroke index pointing upwards) or horizontal installation is preferable. In case of vertical downward installation, special circumstances (e.g. dirt water) may reduce the service life.

Application:

The Oventrop electrothermal actuator (0-10 V) is used for heating, ventilation and air-conditioning. In combination with the Oventrop thermostatic radiator valves or the regulating valves “Cocon/ Hycocon” and the Oventrop room thermostat or a central controller in the building technology, the actuator allows an individual room temperature control.

The actuator can be combined with the following Oventrop valves with connection thread M 30 x 1.5:

- Thermostatic radiator valves, all series (except for “Series ADV 9, ADV 6 and KTB”)
- Three-way conversion valves
- Distributors/collectors for surface heating systems (please observe ambient temperature within the cabinet)
- Regulating valves “Cocon 2TZ / QTZ”
- Regulating valves “Hycocon ETZ/HTZ”
- Three-way diverting and mixing valves

Function:

The Oventrop actuator works with an expansion type working element which is heated electrically by a PTC heating element. A silent operation and low power consumption are thus guaranteed.

Due to the “First-Open” function, the actuator is supplied open with current “off”. This allows the operation of the heating system during construction work even if the electric wiring of the individual room temperature control has not yet been terminated.

To guarantee correct functioning of the actuator, it should be fitted to the valve before initial operation. The “First-Open” function is released automatically by switching the operating current of 24 V AC (more than 10 min.) on for the first time. (This happens only once during initial operation. After initial operation, the actuator immediately switches to control operation each time the operating current has been switched off.) After initialisation, the upper valve lift position and the closing point of the valve are determined by the actuator and the active control voltage range is adapted to the determined valve travel. The actuator now switches to control operation. The stored values are monitored during operation, are adapted if required and are used for control demands and positioning after having switched off the operating current. This way, an optimum adaptation to the respective valve is guaranteed.

If a control voltage of 0.5 – 9.5 V DC is applied after the closing point has been determined, the actuator opens the valve (after termination of the idle time) by lifting the spindle proportionally to the control voltage. Within the range of 0 – 0.5 V, the actuator remains in the idle position to ignore ripple voltage caused by long cables. Within a range of 9.5 and 10 V, the spindle travels the entire 5 mm to check the valve travel which is recognised automatically. By reducing the control voltage and after termination of the rest period, the valve is closed constantly by the closing pressure of the pressure spring.

If the Oventrop actuators are used for room temperature control, it is recommended to carry out the room temperature setback via the room thermostat.

If for some reason a setback of the flow temperature is required during night hours or at other times, a setback of the room temperature via the room thermostat should be carried out additionally.

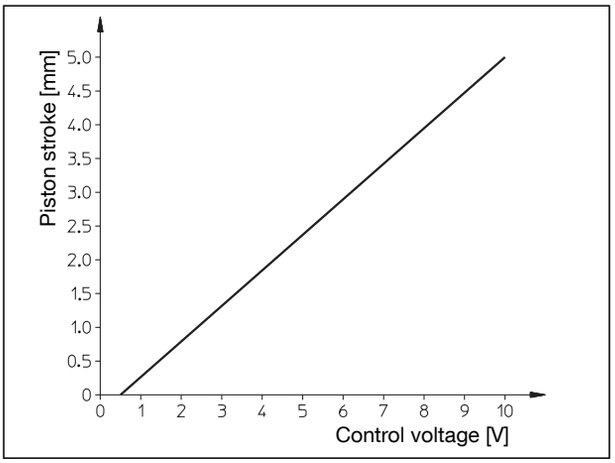

Stroke – control voltage characteristic line
(max. piston stroke without valve)

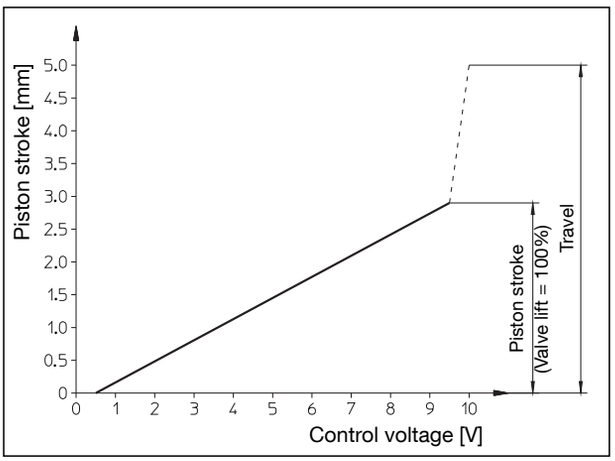

Stroke – control voltage characteristic line with recognised valve spindle lift (e.g. “Series A”)

Accessories	**Item no.:**
Room thermostat (heating and cooling)	1152151
Room thermostat (heating and cooling) with fan drive	1152153
Reinforcing cap	1012450
Valve adapter, M 30 x 1.0	1012890
Valve adapter, high model, M 30 x 1.5	1012462

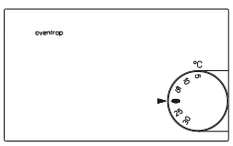

Room thermostat
(heating and cooling)
with one proportional outlet 0-10 V each for heating and cooling (can be used for four pipe systems).
Setting of the nominal value via the rotary knob, adjustable idle time. Item no. 1152153 with additional three-stage fan drive.



Reinforcing cap
to protect the electrothermal actuators against vandalism.





Valve adapter
connection thread M 30 x 1.0
(for Oventrop valves manufactured up to 1998)



Valve adapter
high model,
connection thread M 30 x 1.5
(11 mm higher than standard)

OVENTROP GmbH & Co. KG
Paul-Oventrop-Straße 1
D-59939 Olsberg, Germany
Phone +49 (0)29 62 82-0
Fax +49 (0)29 62 82-450
E-Mail mail@oventrop.de
Internet www.oventrop.de

For an overview of our global presence visit www.oventrop.de.

Subject to technical modification without notice.

Product range 1
ti 334-EN/10/MW
Edition 2016

2016 Oventrop