“Aquastrom C” Double regulating and commissioning valves for circulation pipes in potable water installations

Technical information

Function:

Oventrop double regulating and commissioning valves “Aquastrom C” are installed in the circulation pipes of potable water installations and serve to achieve a hydronic balance between the various circuits of the system.

They can also be used in hot water central heating and air conditioning systems with temperatures between -20 °C and +150 °C and a pressure range of PN 16 (PN 25 for female threaded valves).

The balance is achieved by a presetting with memory lock.

The required presetting values can be obtained from the flow charts. All intermediate values are infinitely adjustable.

The selected presetting can be read off two scales (basic scale and fine adjustment scale, see illustration presetting). The Oventrop double regulating and commissioning valves have two threaded ports which are closed with a blind plug and a draining valve for hose connection which is equipped with a thermometer. The draining valve allows draining off the system for maintenance or repair. The threaded ports may also be equipped with fill and drain ball valves or pressure test points for the measurement of differential pressure. When installing the valve it must be ensured that the direction of flow conforms to the direction of the arrow on the valve body and that the valve is installed with a minimum of L = 3 x Ø of straight pipe at the valve inlet.



“Aquastrom C”

Advantages:

- the location of the functional components in one plane allows for a simple assembly and easy operation
- only one valve for 5 functions
  presetting
  isolating
  temperature display
  draining
  measuring (pressure test points, see accessories)
- infinitely adjustable presetting, exact measurement of pressure loss and flow via the pressure test points (accessories)
- draining valve for hose connection, plug, fill and drain ball valve and pressure test point with O-ring seal towards the valve body
- with insulation
- DVGW, SVGW, KIWA, ASC, VA and WaterMark certified

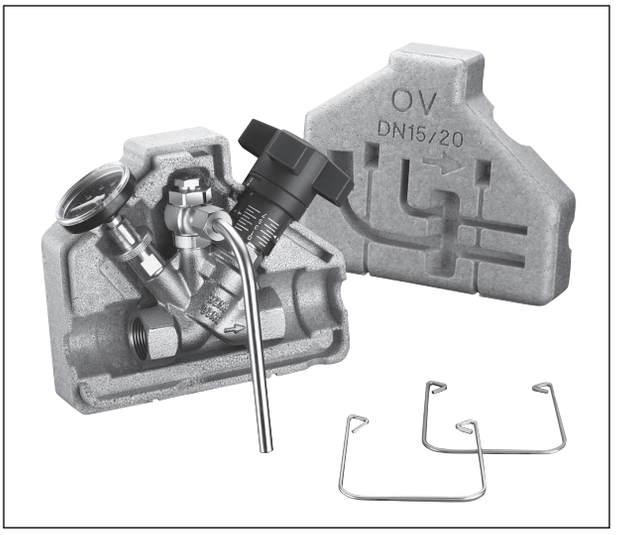

“Aquastrom C” with insulation and “Aquastrom P”

Presetting:

1. The presetting value of the valve is set by turning the handwheel.
   a. The display of the basic setting is shown by the longitudinal scale together with the sliding indicator.
      Each turn of the handwheel is represented by a line on the longitudinal scale.
   b. The display of the fine setting is shown by the peripheral scale on the handwheel together with the marking. The subdivisions of the peripheral scale correspond to 1/10th of a turn of the handwheel.
2. Limitation of the presetting value by turning the inner adjustment stem clockwise until it seats. This can be done using the long end of a 3 mm Allen key.

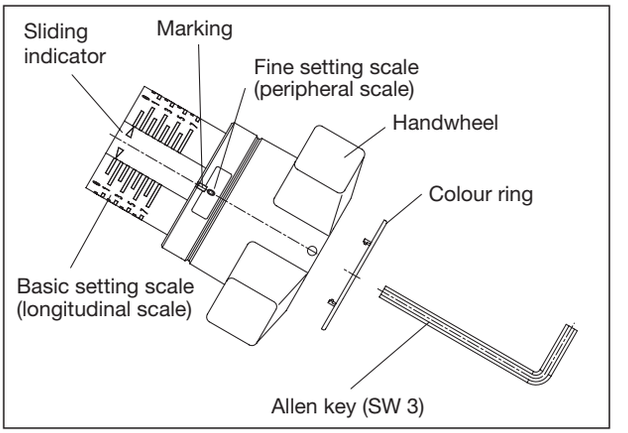

Double regulating and commissioning valve “Aquastrom C”
Tender specification:

Double regulating and commissioning valve PN 10 for potable water installations, DVGW, SVGW, KIWA, ASC, VA and WaterMark certified, both ports with male thread according to DIN ISO 228 for flat sealing couplings, temperature range up to 95 °C, oblique pattern with secured, infinitely adjustable fine presetting controllable at any time, thermometer for temperature monitoring, draining valve for hose connection for draining off the riser, optical display of the presetting depending on the orientation of the handwheel, valve body and bonnet made of bronze, disc and stem made of brass resistant to de-zincification (DZR), disc with PTFE seal, maintenance-free stem seal due to double O-ring, all functional components in one plane.
Alternative application in hot water central heating and air conditioning systems PN 16, for temperatures between -20 °C and +150 °C.

Double regulating and commissioning valves both ports with male thread according to ISO 228 for flat sealing couplings

		Item no.
DN 15	G ¾	4207104
DN 20	G 1	4207106
DN 25	G 1¼	4207108
DN 32	G 1½	4207110
with mounted water sampling valve		
DN 15	G ¾	4207504
DN 20	G 1	4207506
DN 25	G 1¼	4207508
DN 32	G 1½	4207510

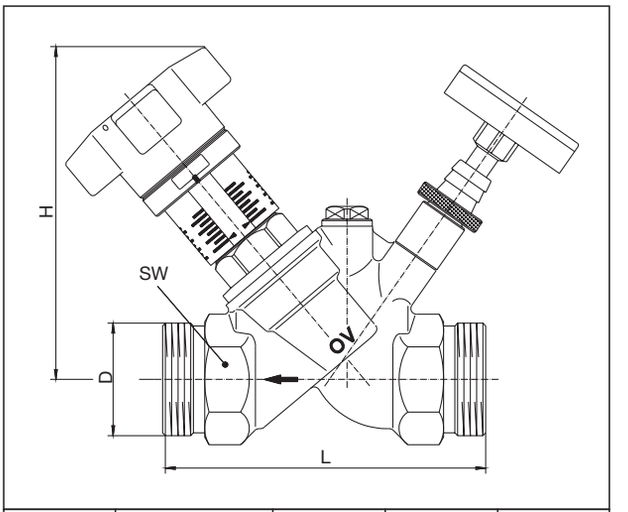

DN	D DIN ISO 228	L	H	SW*
15	G ¾	88	111	27
20	G 1	93	112	32
25	G 1¼	110	116	41
32	G 1½	110	133	46

both ports ISO male thread, item no. 42071..

Double regulating and commissioning valve “Aquastrom C”
Tender specification:

Double regulating and commissioning valve PN 10 for potable water installations, DVGW, SVGW, KIWA, ASC, VA and WaterMark certified, both ports with female thread according to EN 10226-1, temperature range up to 95 °C, oblique pattern with secured, infinitely adjustable fine presetting controllable at any time, thermometer for temperature monitoring, draining valve for hose connection for draining off the riser, optical display of the presetting depending on the orientation of the handwheel, valve body and bonnet made of bronze, disc and stem made of brass resistant to de-zincification (DZR), disc with PTFE seal, maintenance-free stem seal due to double O-ring, all functional components in one plane.
Alternative application in hot water central heating and air conditioning systems PN 25, for temperatures between -20 °C and +150 °C.

Double regulating and commissioning valves both ports with female thread according to EN 10226-1

DN 15	Rp ½	4208104
DN 20	Rp ¾	4208106
DN 25	Rp 1	4208108
DN 32	Rp 1¼	4208110
with mounted water sampling valve		
DN 15	Rp ½	4208504
DN 20	Rp ¾	4208506
DN 25	Rp 1	4208508
DN 32	Rp 1¼	4208510

Basic model without insulation, without draining valve for hose connection and without thermometer

DN 15	Rp ½	4208152
DN 20	Rp ¾	4208154
DN 25	Rp 1	4208156
DN 32	Rp 1¼	4208158

Accessories:

1 fill and drain ball valve	4200191
1 thermometer	4205151
2 pressure test point	1060281

Further accessories see “Hydrocontrol VTR/VPR”, product range 3

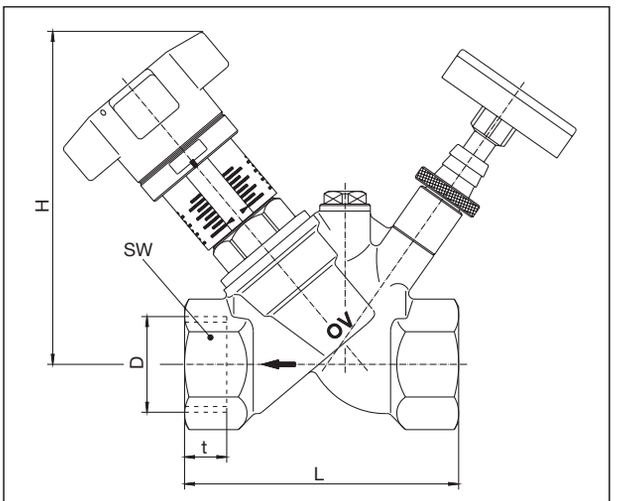

DN	D EN 10226-1	t	L	H	SW*
15	Rp ½	13.2	80	111	27
20	Rp ¾	14.5	84	112	32
25	Rp 1	16.8	97.5	113	41
32	Rp 1¼	19.1	110	133	49

both ports EN female thread, item no. 42081..

* SW = Spanner size

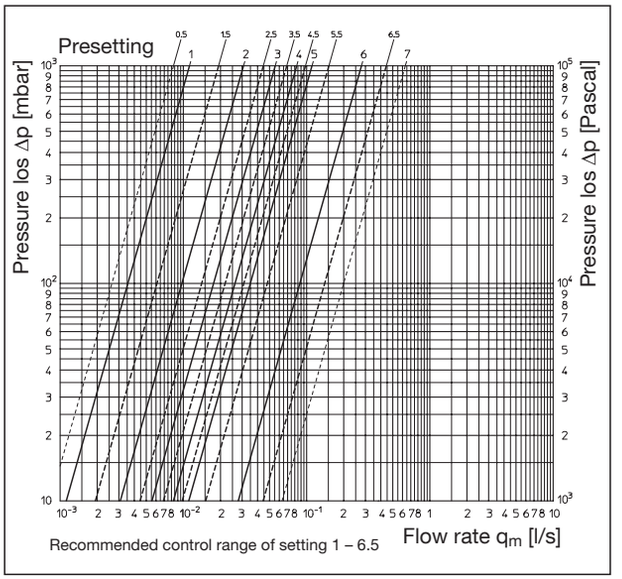

Size DN 15

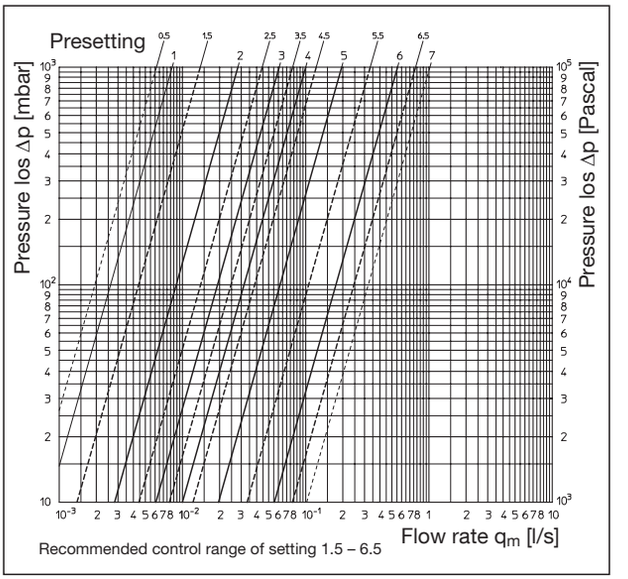

Size DN 20

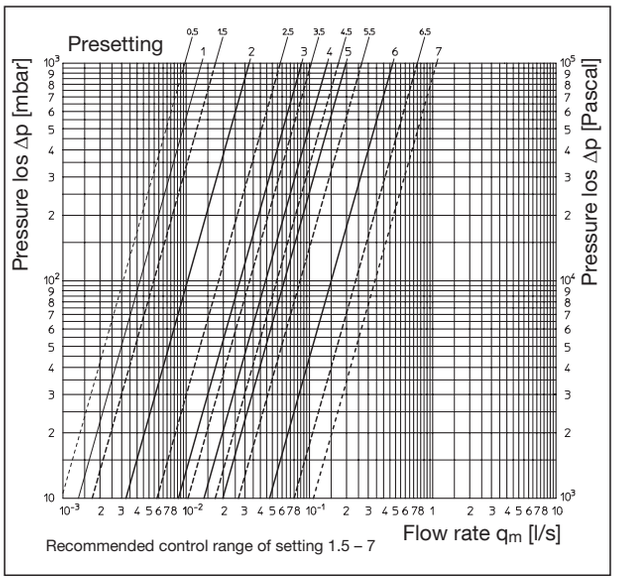

Size DN 25

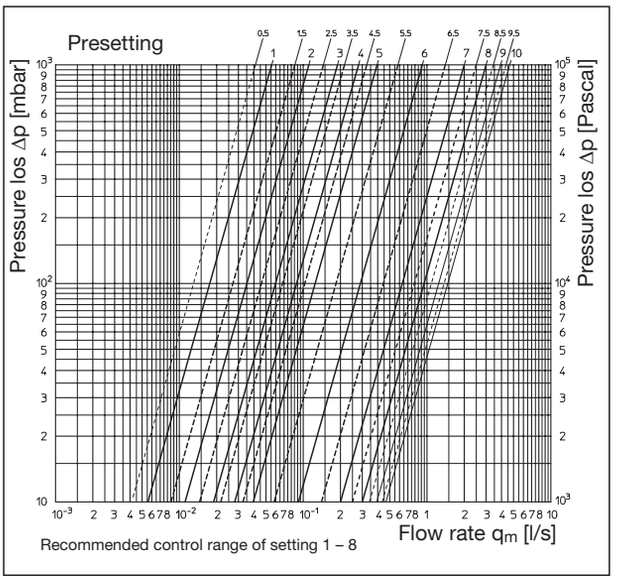

Size DN 32

Note regarding charts:

Avoid valve settings below the recommended range of setting. Too high a differential pressure across the valve unit may lead to noises and may cause damage to the valves.

Insulation shells:

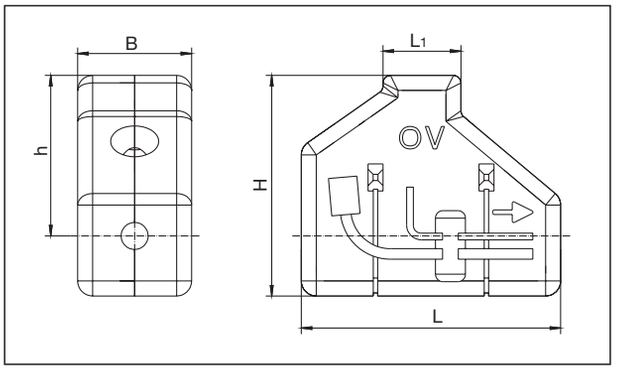

Sizes	Item no.:
DN 15/DN 20	4208181
DN 25	4208182
DN 32	4208183

DN	B	L	L_1	H	h
15	76	173	52	147	107
20	76	173	52	147	107
25	97	220	42	154	114
32	97	224	52	175	130

Dimensions

Tender specification:

Insulation shells made of polystyrene, double shells with two stainless steel clamps

Accessories sets:
Set no. 1: 1 fill and drain ball valve G ¼
with hose connection G ¾ and cap
(components in contact with the fluid free from brass)

Set no. 2: Tailpipe (bronze), flat sealing, with male thread according to EN 10226-1, with collar nut and ring gasket (EPDM)

DN	Connection thread valve	L_1	D_1 according to EN 10226
15	G ¾	31	R ½
20	G 1	34	R ¾
25	G 1¼	40	R 1
32	G 1½	46	R 1¼

Set no. 3: Tailpipe (bronze), flat sealing, with female thread according to EN 10226-1, with collar nut and ring gasket (EPDM)

DN	Size
15	Rp ½ x G ¾ collar nut (brass)
20	Rp ¾ x G 1 collar nut (brass)
25	Rp 1 x G 1¼ collar nut (bronze)
32	Rp 1¼ x G 1½ collar nut (bronze)

Set no. 4: Solder tailpipe (bronze), flat sealing, with collar nut and ring gasket (EPDM)

DN	Connection thread valve	L_2	D_2
15	G ¾	18	15
15	G ¾	20	18
20	G 1	23	22
25	G 1¼	27	28
32	G 1½	32	35

Set no. 5: Weldable tailpipe (steel), flat sealing, with collar nut and ring gasket (EPDM)

DN	Connection thread valve	L_3	D_3
15 - 32	G ¾ - G 1½	31.5 - 36	20.5 - 41

Bronze or stainless steel press fittings
System mapress/system Viega
flat sealing with collar nut or as screwed fittings for copper and stainless steel pipes, also with silicone-free seals

Ø 15 mm – Ø 35 mm system mapress 42015..
Ø 15 mm – Ø 35 mm system Viega 42016..

Set of compression fittings for copper pipe, compression nut and compression ring made of brass,
item no. 1027150-58

DN	G	D_5
15	G ½	10 mm
15	G ½	12 mm
15	G ½	14 mm
15	G ½	15 mm
15	G ½	16 mm
20	G ¾	18 mm
20	G ¾	22 mm

“Combi-System” see catalogue “Products”, product range 13
DVGW reg.-no. DW-8501AT2407
Composition pipe “Copipe”
DN 10 (14 mm) – DN 50 (63 mm)
Press connection with male thread “Cofit P”
DN 12 (16 mm) – DN 50 (63 mm)
Press connection with collar nut “Cofit P”
with flat seal
DN 12 (16 mm) – DN 32 (40 mm)
Compression fittings with male thread “Cofit S”
DN 10 (14 mm) – DN 25 (32 mm)
Nipple “Cofit S”
for the connection to valves and fittings with female thread
DN 12 (16 mm) – DN 25 (32 mm) (pipe dimension)
Connection piece “Cofit S” with flat seal
for the connection to valves and fittings with male thread
DN 12 (16 mm) – DN 25 (32 mm) (pipe dimension)

Subject to technical modification without notice.

Product range 12
ti 154-EN/20/MW
Edition 2016

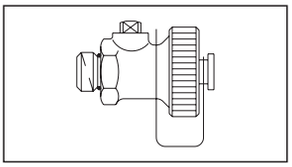
Set no. 1 item no. 4200191

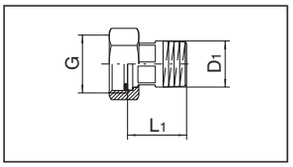

Set no. 2 item no. 4201472-75

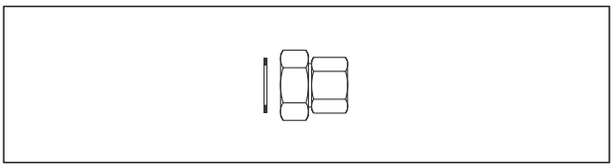
Set no. 3 item no. 4201372-75

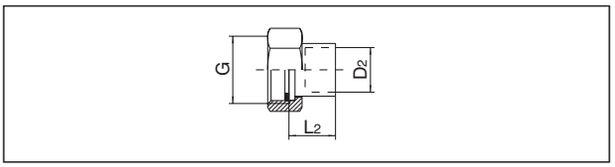

Set no. 4 item no. 4202072-76

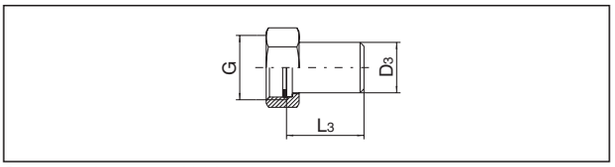

Set no. 5 item no. 4200572-75

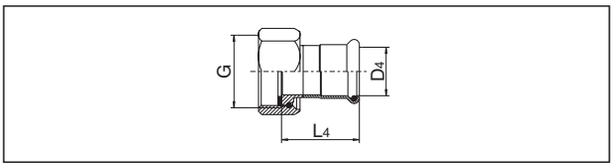

Item no. 4201572-76

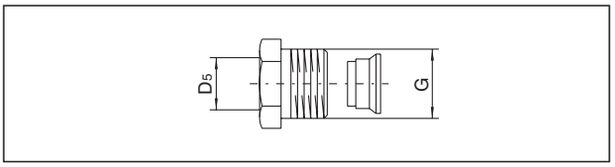

Item no. 1027150-58

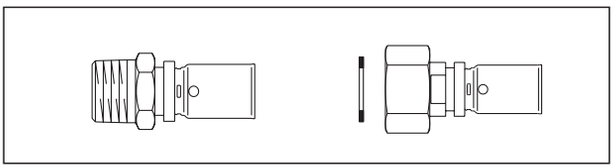
Connection system “Cofit P” for female and male threaded connection

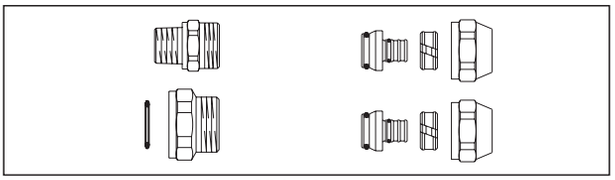
Connection system “Cofit S” for female and male threaded connection

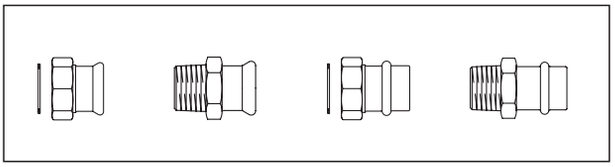
Item no. 42015/16..
System mapress/system Viega
Connection fittings